10 Electrical system

10.1 General information . . . 10-19
10.1.1 Introduction to the electrical system . . . 10-19
10.1.2 Basic electrical troubleshooting procedures . . . 10-19
10.1.3 Electrical service tools . . . 10-19
10.1.4 Test a fuse . . . 10-20
10.1.5 Test a diode . . . 10-20
10.1.6 Test a relay . . . 10-20
10.2 Electrical system components . . . 10-22
10.2.1 Remove the batteries . . . 10-22
10.2.2 Install the batteries . . . 10-23
10.2.3 Remove the headlamp . . . 10-25
10.2.4 Install the headlamp . . . 10-27
10.2.5 Remove the headlamps - MY16 . . . 10-29
10.2.6 Install the headlamps - MY16 . . . 10-30
10.3 Fuse panel . . . 10-32
10.3.1 Main fuse panel . . . 10-32
10.3.2 Fuse block one . . . 10-33
10.3.3 Fuse block two . . . 10-34
10.3.4 Fuse relay block one . . . 10-35
10.3.5 Fuse relay block two . . . 10-36
10.3.6 Relay and fuse panel for chassis . . . 10-36
10.3.7 Main fuse . . . 10-37
10.4 Electrical system troubleshooting . . . 10-38
10.5 00 Engine module . . . 10-39
10.5.1 Code SA 00 SPN 1761 FMI 01 . . . 10-39
10.5.1.1 DEF electrical schematic . . . 10-39
10.5.2 Code SA 00 SPN 1761 FMI 03 . . . 10-40
10.5.2.1 DEF electrical schematic . . . 10-41
10.5.3 Code SA 00 SPN 1761 FMI 04 . . . 10-42
10.5.3.1 DEF electrical schematic . . . 10-42
10.5.4 Code SA 00 SPN 1761 FMI 18 . . . 10-43
10.5.4.1 DEF electrical schematic . . . 10-44
10.5.5 Code SA 00 SPN 3031 FMI 03 . . . 10-45
10.5.5.1 DEF electrical schematic . . . 10-45
10.5.6 Code SA 00 SPN 3031 FMI 04 . . . 10-46
10.5.6.1 DEF electrical schematic . . . 10-47
10.5.7 Code SA 00 SPN 3031 FMI 10 . . . 10-48
10.5.7.1 DEF electrical schematic . . . 10-48
10.5.8 Code SA 00 SPN 3031 FMI 14 . . . 10-49
10.5.8.1 DEF electrical schematic . . . 10-50
10.5.9 Code SA 00 SPN 3031 FMI 16 . . . 10-51
10.5.9.1 DEF electrical schematic . . . 10-51
10.5.10 Code SA 00 SPN 3361 FMI 03 . . . 10-52
10.5.10.1 DEF electrical schematic . . . 10-53
10.5.11 Code SA 00 SPN 3361 FMI 04 . . . 10-54
10.5.11.1 DEF electrical schematic . . . 10-54
10.5.12 Code SA 00 SPN 3361 FMI 05 . . . 10-55
10.5.12.1 DEF electrical schematic . . . 10-56
10.5.13 Code SA 00 SPN 3361 FMI 06 . . . 10-57
10.5.13.1 DEF electrical schematic . . . 10-57

10.5.14 Code SA 00 SPN 3361 FMI 11 10-58
10.5.14.1 DEF electrical schematic 10-59
10.5.15 Code SA 00 SPN 3361 FMI 14 10-60
10.5.15.1 DEF electrical schematic 10-60
10.5.16 Code SA 00 SPN 3361 FMI 31 10-61
10.5.16.1 DEF electrical schematic 10-62
10.5.17 Code SA 00 SPN 3363 FMI 03 10-63
10.5.17.1 DEF electrical schematic 10-63
10.5.18 Code SA 00 SPN 3363 FMI 04 10-64
10.5.18.1 DEF electrical schematic 10-65
10.5.19 Code SA 00 SPN 3363 FMI 05 10-66
10.5.19.1 DEF electrical schematic 10-66
10.5.20 Code SA 00 SPN 3363 FMI 31 10-67
10.5.20.1 DEF electrical schematic 10-68
10.5.21 Code SA 00 SPN 4090 FMI 16 10-69
10.5.22 Code SA 00 SPN 4090 FMI 18 10-69
10.5.23 Code SA 00 SPN 4332 FMI 00 10-69
10.5.24 Code SA 00 SPN 4332 FMI 11 10-70
10.5.25 Code SA 00 SPN 4332 FMI 14 10-70
10.5.26 Code SA 00 SPN 4332 FMI 16 10-70
10.5.27 Code SA 00 SPN 4332 FMI 18 10-71
10.5.28 Code SA 00 SPN 4332 FMI 31 10-71
10.5.29 Code SA 00 SPN 4334 FMI 03 10-71
10.5.29.1 DEF electrical schematic 10-72
10.5.30 Code SA 00 SPN 4334 FMI 04 10-73
10.5.30.1 DEF electrical schematic 10-74
10.5.31 Code SA 00 SPN 4340 FMI 03 10-75
10.5.31.1 DEF electrical schematic 10-75
10.5.32 Code SA 00 SPN 4340 FMI 04 10-76
10.5.32.1 DEF electrical schematic 10-77
10.5.33 Code SA 00 SPN 4340 FMI 05 10-78
10.5.33.1 DEF electrical schematic 10-78
10.5.34 Code SA 00 SPN 4340 FMI 31 10-79
10.5.34.1 DEF electrical schematic 10-80
10.5.35 Code SA 00 SPN 4342 FMI 03 10-81
10.5.35.1 DEF electrical schematic 10-81
10.5.36 Code SA 00 SPN 4342 FMI 04 10-82
10.5.36.1 DEF electrical schematic 10-83
10.5.37 Code SA 00 SPN 4342 FMI 05 10-84
10.5.37.1 DEF electrical schematic 10-84
10.5.38 Code SA 00 SPN 4342 FMI 31 10-85
10.5.38.1 DEF electrical schematic 10-86
10.5.39 Code SA 00 SPN 4344 FMI 02 10-87
10.5.39.1 DEF electrical schematic 10-87
10.5.40 Code SA 00 SPN 4344 FMI 03 10-88
10.5.40.1 DEF electrical schematic 10-89
10.5.41 Code SA 00 SPN 4344 FMI 04 10-90
10.5.41.1 DEF electrical schematic 10-90
10.5.42 Code SA 00 SPN 4344 FMI 08 10-91
10.5.42.1 DEF electrical schematic 10-92
10.5.43 Code SA 00 SPN 4344 FMI 12 10-93
10.5.43.1 DEF electrical schematic 10-93
10.5.44 Code SA 00 SPN 4344 FMI 31 10-94
10.5.44.1 DEF electrical schematic 10-95
10.5.45 Code SA 00 SPN 4346 FMI 03 10-96
10.5.45.1 DEF electrical schematic 10-96
10.5.46 Code SA 00 SPN 4346 FMI 04 10-97
10.5.46.1 DEF electrical schematic 10-98

10.5.47 Code SA 00 SPN 4346 FMI 05 10-99
10.5.47.1 DEF electrical schematic 10-99
10.5.48 Code SA 00 SPN 4346 FMI 31 10-100
10.5.48.1 DEF electrical schematic 10-101
10.5.49 Code SA 00 SPN 4354 FMI 03 10-102
10.5.49.1 DEF electrical schematic 10-102
10.5.50 Code SA 00 SPN 4354 FMI 04 10-103
10.5.50.1 DEF electrical schematic 10-104
10.5.51 Code SA 00 SPN 4355 FMI 03 10-105
10.5.51.1 DEF electrical schematic 10-105
10.5.52 Code SA 00 SPN 4355 FMI 04 10-106
10.5.52.1 DEF electrical schematic 10-107
10.5.53 Code SA 00 SPN 4356 FMI 03 10-108
10.5.53.1 DEF electrical schematic 10-108
10.5.54 Code SA 00 SPN 4356 FMI 04 10-109
10.5.54.1 DEF electrical schematic 10-110
10.5.55 Code SA 00 SPN 4356 FMI 05 10-111
10.5.55.1 DEF electrical schematic 10-111
10.5.56 Code SA 00 SPN 4357 FMI 03 10-112
10.5.56.1 DEF electrical schematic 10-113
10.5.57 Code SA 00 SPN 4357 FMI 04 10-114
10.5.57.1 DEF electrical schematic 10-114
10.5.58 Code SA 00 SPN 4360 FMI 02 10-115
10.5.58.1 NOx sensor electrical schematic 10-116
10.5.59 Code SA 00 SPN 4360 FMI 03 10-116
10.5.59.1 NOx sensor electrical schematic 10-117
10.5.60 Code SA 00 SPN 4360 FMI 04 10-117
10.5.60.1 NOx sensor electrical schematic 10-118
10.5.61 Code SA 00 SPN 4363 FMI 02 10-118
10.5.61.1 NOx sensor electrical schematic 10-119
10.5.62 Code SA 00 SPN 4363 FMI 03 10-119
10.5.62.1 NOx sensor electrical schematic 10-120
10.5.63 Code SA 00 SPN 4363 FMI 04 10-120
10.5.63.1 NOx sensor electrical schematic 10-121
10.5.64 Code SA 00 SPN 4374 FMI 08 10-121
10.5.64.1 DEF electrical schematic 10-122
10.5.65 Code SA 00 SPN 4374 FMI 14 10-123
10.5.65.1 DEF electrical schematic 10-124
10.5.66 Code SA 00 SPN 4374 FMI 31 10-125
10.5.66.1 DEF electrical schematic 10-125
10.5.67 Code SA 00 SPN 4375 FMI 03 10-126
10.5.67.1 DEF electrical schematic 10-127
10.5.68 Code SA 00 SPN 4375 FMI 04 10-128
10.5.68.1 DEF electrical schematic 10-128
10.5.69 Code SA 00 SPN 4375 FMI 05 10-129
10.5.69.1 DEF electrical schematic 10-130
10.5.70 Code SA 00 SPN 4375 FMI 31 10-131
10.5.70.1 DEF electrical schematic 10-131
10.5.71 Code SA 00 SPN 4376 FMI 03 10-132
10.5.71.1 DEF electrical schematic 10-133
10.5.72 Code SA 00 SPN 4376 FMI 04 10-134
10.5.72.1 DEF electrical schematic 10-134
10.5.73 Code SA 00 SPN 4376 FMI 05 10-135
10.5.73.1 DEF electrical schematic 10-136
10.5.74 Code SA 00 SPN 4376 FMI 31 10-137
10.5.74.1 DEF electrical schematic 10-137
10.5.75 Code SA 00 SPN 4792 FMI 14 10-138
10.5.76 Code SA 00 SPN 521000 FMI 02 10-138

10.5.76.1 DEF electrical schematic . . . 10-139
10.5.77 Code SA 00 SPN 521000 FMI 08 . . . 10-140
10.5.77.1 DEF electrical schematic . . . 10-140
10.5.78 Code SA 00 SPN 521001 FMI 03 . . . 10-141
10.5.78.1 DEF electrical schematic . . . 10-142
10.5.79 Code SA 00 SPN 521001 FMI 04 . . . 10-143
10.5.79.1 DEF electrical schematic . . . 10-143
10.5.80 Code SA 00 SPN 521001 FMI 31 . . . 10-144
10.5.80.1 DEF electrical schematic . . . 10-145
10.5.81 Code SA 00 SPN 521002 FMI 03 . . . 10-146
10.5.81.1 DEF electrical schematic . . . 10-146
10.5.82 Code SA 00 SPN 521002 FMI 04 . . . 10-147
10.5.82.1 DEF electrical schematic . . . 10-148
10.5.83 Code SA 00 SPN 521002 FMI 05 . . . 10-149
10.5.83.1 DEF electrical schematic . . . 10-149
10.5.84 Code SA 00 SPN 521002 FMI 31 . . . 10-150
10.5.84.1 DEF electrical schematic . . . 10-151
10.5.85 Code SA 00 SPN 521003 FMI 03 . . . 10-152
10.5.85.1 DEF electrical schematic . . . 10-152
10.5.86 Code SA 00 SPN 521003 FMI 04 . . . 10-153
10.5.86.1 DEF electrical schematic . . . 10-154
10.5.87 Code SA 00 SPN 521004 FMI 02 . . . 10-155
10.5.87.1 NOx sensor electrical schematic . . . 10-155
10.5.88 Code SA 00 SPN 521004 FMI 11 . . . 10-156
10.5.88.1 NOx sensor electrical schematic . . . 10-156
10.5.89 Code SA 00 SPN 521004 FMI 12 . . . 10-157
10.5.89.1 NOx sensor electrical schematic . . . 10-157
10.5.90 Code SA 00 SPN 521004 FMI 14 . . . 10-158
10.5.90.1 NOx sensor electrical schematic . . . 10-158
10.5.91 Code SA 00 SPN 521005 FMI 02 . . . 10-159
10.5.91.1 NOx sensor electrical schematic . . . 10-159
10.5.92 Code SA 00 SPN 521005 FMI 11 . . . 10-160
10.5.92.1 NOx sensor electrical schematic . . . 10-160
10.5.93 Code SA 00 SPN 521005 FMI 12 . . . 10-161
10.5.93.1 NOx sensor electrical schematic . . . 10-161
10.5.94 Code SA 00 SPN 521005 FMI 14 . . . 10-162
10.5.94.1 NOx sensor electrical schematic . . . 10-163
10.5.95 Code SA 00 SPN 521006 FMI 12 . . . 10-163
10.5.96 Code SA 00 SPN 521007 FMI 10 . . . 10-164
10.5.97 Code SA 00 SPN 521007 FMI 14 . . . 10-164
10.5.98 Code SA 00 SPN 521007 FMI 31 . . . 10-164
10.5.99 Code SA 00 SPN 521008 FMI 00 . . . 10-165
10.5.100 Code SA 00 SPN 521008 FMI 01 . . . 10-165
10.6 03 Transmission . . . 10-166
10.6.1 Code SA 03 SPN 96 FMI 03 . . . 10-166
10.6.1.1 Fuel level sender electrical schematic . . . 10-167
10.6.1.2 Transmission hydraulic oil charge pressure sensor electrical schematic 10-168
10.6.2 Code SA 03 SPN 96 FMI 04 . . . 10-169
10.6.2.1 Fuel level sender electrical schematic . . . 10-170
10.6.2.2 Transmission hydraulic oil charge pressure sensor electrical schematic 10-171
10.6.3 Code SA 03 SPN 117 FMI 01 . . . 10-172
10.6.3.1 Brake accumulator electrical schematic . . . 10-175
10.6.4 Code SA 03 SPN 126 FMI 31 . . . 10-176
10.6.4.1 Transmission hydraulic oil charge pressure sensor electrical schematic 10-178
10.6.5 Code SA 03 SPN 127 FMI 01 . . . 10-179
10.6.5.1 Transmission hydraulic oil charge pressure sensor electrical schematic 10-182
10.6.6 Code SA 03 SPN 161 FMI 02 . . . 10-183
10.6.6.1 Transmission input shaft speed sensor electrical schematic . . . 10-185

10.6.7 Code SA 03 SPN 168 FMI 01 10-186
10.6.7.1 Transmission input shaft speed sensor electrical schematic 10-188
10.6.8 Code SA 03 SPN 177 FMI 00 10-189
10.6.8.1 Transmission hydraulic oil charge pressure sensor electrical schematic 10-191
10.6.9 Code SA 03 SPN 177 FMI 03 10-192
10.6.9.1 Transmission hydraulic oil charge pressure sensor electrical schematic 10-194
10.6.10 Code SA 03 SPN 177 FMI 04 10-195
10.6.10.1 Transmission hydraulic oil charge pressure sensor electrical schematic 10-197
10.6.11 Code SA 03 SPN 177 FMI 14 10-198
10.6.11.1 Transmission hydraulic oil charge pressure sensor electrical schematic 10-200
10.6.12 Code SA 03 SPN 191 FMI 00 10-201
10.6.12.1 Transmission input shaft speed sensor electrical schematic 10-203
10.6.13 Code SA 03 SPN 191 FMI 12 10-204
10.6.13.1 Transmission input shaft speed sensor electrical schematic 10-206
10.6.14 Code SA 03 SPN 473 FMI 03 10-207
10.6.14.1 Transmission hydraulic oil charge pressure sensor electrical schematic 10-210
10.6.15 Code SA 03 SPN 473 FMI 04 10-211
10.6.15.1 Transmission hydraulic oil charge pressure sensor electrical schematic 10-214
10.6.16 Code SA 03 SPN 564 FMI 03 10-215
10.6.16.1 Differential lock electrical schematic 10-216
10.6.17 Code SA 03 SPN 564 FMI 05 10-216
10.6.17.1 Differential lock electrical schematic 10-218
10.6.18 Code SA 03 SPN 564 FMI 06 10-218
10.6.18.1 Differential lock electrical schematic 10-220
10.6.19 Code SA 03 SPN 590 FMI 09 10-220
10.6.19.1 CAN electrical schematic 10-222
10.6.19.2 Transmission input shaft speed sensor electrical schematic 10-224
10.6.20 Code SA 03 SPN 590 FMI 12 10-225
10.6.20.1 CAN electrical schematic 10-227
10.6.20.2 Transmission input shaft speed sensor electrical schematic 10-229
10.6.21 Code SA 03 SPN 598 FMI 02 10-230
10.6.21.1 Inching pedal switch 10-232
10.6.21.2 Inching pedal electrical schematic 10-233
10.6.22 Code SA 03 SPN 598 FMI 07 10-234
10.6.22.1 Inching pedal switch 10-236
10.6.22.2 Inching pedal electrical schematic 10-237
10.6.23 Code SA 03 SPN 598 FMI 14 10-238
10.6.23.1 Inching pedal switch 10-240
10.6.23.2 Inching pedal electrical schematic 10-241
10.6.24 Code SA 03 SPN 617 FMI 03 10-242
10.6.24.1 Brake accumulator electrical schematic 10-243
10.6.25 Code SA 03 SPN 617 FMI 05 10-244
10.6.25.1 Brake accumulator electrical schematic 10-246
10.6.26 Code SA 03 SPN 617 FMI 06 10-247
10.6.26.1 Brake accumulator electrical schematic 10-249
10.6.27 Code SA 03 SPN 618 FMI 03 10-250
10.6.27.1 Brake accumulator electrical schematic 10-252
10.6.28 Code SA 03 SPN 618 FMI 05 10-253
10.6.28.1 Brake accumulator electrical schematic 10-255
10.6.29 Code SA 03 SPN 618 FMI 06 10-256
10.6.29.1 Brake accumulator electrical schematic 10-258
10.6.30 Code SA 03 SPN 625 FMI 02 10-259
10.6.30.1 CAN electrical schematic 10-261
10.6.31 Code SA 03 SPN 625 FMI 09 10-262
10.6.31.1 CAN electrical schematic 10-264
10.6.32 Code SA 03 SPN 625 FMI 12 10-265
10.6.32.1 CAN electrical schematic 10-268
10.6.33 Code SA 03 SPN 639 FMI 09 10-269

10.6.33.1 CAN electrical schematic 10-272
10.6.34 Code SA 03 SPN 677 FMI 03 10-273
10.6.34.1 Neutral start relay electrical schematic 10-275
10.6.35 Code SA 03 SPN 677 FMI 05 10-276
10.6.35.1 Neutral start relay electrical schematic 10-278
10.6.36 Code SA 03 SPN 677 FMI 06 10-279
10.6.36.1 Neutral start relay electrical schematic 10-281
10.6.37 Code SA 03 SPN 678 FMI 03 10-282
10.6.37.1 8 volt sensor supply electrical schematic 10-285
10.6.38 Code SA 03 SPN 678 FMI 03 10-287
10.6.38.1 8 volt sensor supply electrical schematic 10-289
10.6.39 Code SA 03 SPN 684 FMI 00 10-291
10.6.39.1 Inching pedal switch 10-293
10.6.39.2 Inching pedal electrical schematic 10-294
10.6.40 Code SA 03 SPN 684 FMI 01 10-295
10.6.40.1 Inching pedal switch 10-297
10.6.40.2 Inching pedal electrical schematic 10-298
10.6.41 Code SA 03 SPN 684 FMI 08 10-299
10.6.41.1 Inching pedal switch 10-302
10.6.41.2 Inching pedal electrical schematic 10-303
10.6.42 Code SA 03 SPN 734 FMI 03 10-304
10.6.42.1 Transmission clutch solenoid electrical schematic 10-305
10.6.43 Code SA 03 SPN 734 FMI 05 10-306
10.6.43.1 Transmission clutch solenoid electrical schematic 10-308
10.6.44 Code SA 03 SPN 734 FMI 06 10-309
10.6.44.1 Transmission clutch solenoid electrical schematic 10-311
10.6.45 Code SA 03 SPN 735 FMI 03 10-312
10.6.45.1 Transmission clutch solenoid electrical schematic 10-314
10.6.46 Code SA 03 SPN 735 FMI 05 10-315
10.6.46.1 Transmission clutch solenoid electrical schematic 10-317
10.6.47 Code SA 03 SPN 735 FMI 06 10-318
10.6.47.1 Transmission clutch solenoid electrical schematic 10-320
10.6.48 Code SA 03 SPN 736 FMI 03 10-321
10.6.48.1 Transmission clutch solenoid electrical schematic 10-323
10.6.49 Code SA 03 SPN 736 FMI 05 10-324
10.6.49.1 Transmission clutch solenoid electrical schematic 10-326
10.6.50 Code SA 03 SPN 736 FMI 06 10-327
10.6.50.1 Transmission clutch solenoid electrical schematic 10-329
10.6.51 Code SA 03 SPN 737 FMI 03 10-330
10.6.51.1 Transmission clutch solenoid electrical schematic 10-332
10.6.52 Code SA 03 SPN 737 FMI 05 10-333
10.6.52.1 Transmission clutch solenoid electrical schematic 10-335
10.6.53 Code SA 03 SPN 737 FMI 06 10-336
10.6.53.1 Transmission clutch solenoid electrical schematic 10-338
10.6.54 Code SA 03 SPN 738 FMI 03 10-339
10.6.54.1 Transmission clutch solenoid electrical schematic 10-341
10.6.55 Code SA 03 SPN 738 FMI 05 10-342
10.6.55.1 Transmission clutch solenoid electrical schematic 10-344
10.6.56 Code SA 03 SPN 738 FMI 06 10-345
10.6.56.1 Transmission clutch solenoid electrical schematic 10-347
10.6.57 Code SA 03 SPN 739 FMI 03 10-348
10.6.57.1 Transmission clutch solenoid electrical schematic 10-350
10.6.58 Code SA 03 SPN 739 FMI 05 10-351
10.6.58.1 Transmission clutch solenoid electrical schematic 10-353
10.6.59 Code SA 03 SPN 739 FMI 06 10-354
10.6.59.1 Transmission clutch solenoid electrical schematic 10-356
10.6.60 Code SA 03 SPN 1638 FMI 00 10-357
10.6.60.1 Transmission hydraulic oil charge pressure sensor electrical schematic 10-359

10.6.61 Code SA 03 SPN 1638 FMI 03 10-360
10.6.61.1 Transmission hydraulic oil charge pressure sensor electrical schematic 10-362
10.6.62 Code SA 03 SPN 1638 FMI 04 10-363
10.6.62.1 Transmission hydraulic oil charge pressure sensor electrical schematic 10-365
10.6.63 Code SA 03 SPN 1713 FMI 14 10-366
10.6.63.1 Implement oil filter bypass switch electrical schematic 10-368
10.6.64 Code SA 03 SPN 1713 FMI 31 10-369
10.6.64.1 Implement oil filter bypass switch electrical schematic 10-372
10.6.65 Code SA 03 SPN 1873 FMI 00 10-373
10.6.65.1 Implement oil filter bypass switch electrical schematic 10-375
10.6.66 Code SA 03 SPN 1873 FMI 01 10-376
10.6.66.1 Implement oil filter bypass switch electrical schematic 10-379
10.6.67 Code SA 03 SPN 1873 FMI 08 10-380
10.6.67.1 Implement oil filter bypass switch electrical schematic 10-383
10.6.68 Code SA 03 SPN 1873 FMI 12 10-384
10.6.68.1 Implement oil filter bypass switch electrical schematic 10-387
10.6.69 Code SA 03 SPN 1873 FMI 13 10-388
10.6.69.1 Implement oil filter bypass switch electrical schematic 10-389
10.6.70 Code SA 03 SPN 1883 FMI 13 10-390
10.6.70.1 Implement oil filter bypass switch electrical schematic 10-391
10.6.71 Code SA 03 SPN 2000 FMI 02 10-392
10.6.71.1 CAN electrical schematic 10-395
10.6.71.2 Transmission input shaft speed sensor electrical schematic 10-397
10.6.72 Code SA 03 SPN 2005 FMI 02 10-398
10.6.72.1 CAN electrical schematic 10-401
10.6.72.2 Transmission input shaft speed sensor electrical schematic 10-403
10.6.73 Code SA 03 SPN 2602 FMI 14 10-404
10.6.73.1 Oil level switch schematic 10-406
10.6.74 Code SA 03 SPN 2613 FMI 01 10-407
10.6.74.1 Axle lube sensor electrical schematic 10-409
10.6.75 Code SA 03 SPN 2613 FMI 18 10-409
10.6.75.1 Axle lube sensor electrical schematic 10-411
10.6.76 Code SA 03 SPN 2833 FMI 14 10-411
10.6.76.1 Brake accumulator electrical schematic 10-413
10.6.77 Code SA 03 SPN 2833 FMI 31 10-414
10.6.77.1 Brake accumulator electrical schematic 10-416
10.6.78 Code SA 03 SPN 2858 FMI 02 10-417
10.6.78.1 CAN electrical schematic 10-421
10.6.79 Code SA 03 SPN 2905 FMI 03 10-422
10.6.79.1 Transmission clutch solenoid electrical schematic 10-424
10.6.80 Code SA 03 SPN 2905 FMI 05 10-425
10.6.80.1 Transmission clutch solenoid electrical schematic 10-427
10.6.81 Code SA 03 SPN 2905 FMI 06 10-428
10.6.81.1 Transmission clutch solenoid electrical schematic 10-430
10.6.82 Code SA 03 SPN 2906 FMI 03 10-431
10.6.82.1 Transmission clutch solenoid electrical schematic 10-433
10.6.83 Code SA 03 SPN 2906 FMI 05 10-434
10.6.83.1 Transmission clutch solenoid electrical schematic 10-436
10.6.84 Code SA 03 SPN 2906 FMI 06 10-437
10.6.84.1 Transmission clutch solenoid electrical schematic 10-439
10.6.85 Code SA 03 SPN 2910 FMI 03 10-440
10.6.85.1 Implement oil filter bypass switch electrical schematic 10-442
10.6.86 Code SA 03 SPN 2910 FMI 05 10-443
10.6.86.1 Implement oil filter bypass switch electrical schematic 10-445
10.6.87 Code SA 03 SPN 2910 FMI 06 10-446
10.6.87.1 Implement oil filter bypass switch electrical schematic 10-448
10.6.88 Code SA 03 SPN 2924 FMI 14 10-449
10.6.88.1 Implement oil filter bypass switch electrical schematic 10-451

10.6.89 Code SA 03 SPN 3454 FMI 02 10-452
10.6.89.1 Rear hitch controls electrical schematic 10-455
10.6.90 Code SA 03 SPN 3509 FMI 03 10-456
10.6.90.1 5 volt sensor supply electrical schematic 10-457
10.6.91 Code SA 03 SPN 3509 FMI 04 10-458
10.6.91.1 5 volt sensor supply electrical schematic 10-460
10.6.92 Code SA 03 SPN 3513 FMI 03 10-461
10.6.92.1 10 volt sensor supply electrical schematic 10-464
10.6.93 Code SA 03 SPN 3513 FMI 04 10-466
10.6.93.1 10 volt sensor supply electrical schematic 10-469
10.6.94 Code SA 03 SPN 3825 FMI 12 10-471
10.6.94.1 Transmission input shaft speed sensor electrical schematic 10-474
10.6.95 Code SA 03 SPN 521471 FMI 00 10-475
10.6.95.1 Steering wheel position sensors electrical schematic 10-479
10.6.96 Code SA 03 SPN 521471 FMI 01 10-479
10.6.96.1 Steering wheel position sensors electrical schematic 10-483
10.6.97 Code SA 03 SPN 521471 FMI 02 10-483
10.6.97.1 Steering wheel position sensors electrical schematic 10-485
10.6.98 Code SA 03 SPN 521471 FMI 08 10-486
10.6.98.1 Steering wheel position sensors electrical schematic 10-488
10.6.99 Code SA 03 SPN 521471 FMI 12 10-488
10.6.99.1 Steering wheel position sensors electrical schematic 10-490
10.6.100 Code SA 03 SPN 521471 FMI 13 10-491
10.6.100.1 Steering wheel position sensors electrical schematic 10-492
10.6.101 Code SA 03 SPN 521472 FMI 00 10-492
10.6.101.1 Steering wheel position sensors electrical schematic 10-495
10.6.102 Code SA 03 SPN 521472 FMI 01 10-496
10.6.102.1 Steering wheel position sensors electrical schematic 10-499
10.6.103 Code SA 03 SPN 521472 FMI 02 10-500
10.6.103.1 Steering wheel position sensors electrical schematic 10-502
10.6.104 Code SA 3 SPN 521472 FMI 8 10-502
10.6.104.1 Steering wheel position sensors electrical schematic 10-504
10.6.105 Code SA 3 SPN 521472 FMI 12 10-505
10.6.105.1 Steering wheel position sensors electrical schematic 10-507
10.6.106 Code SA 03 SPN 521472 FMI 13 10-507
10.6.106.1 Steering wheel position sensors electrical schematic 10-508
10.6.107 Code SA 03 SPN 521473 FMI 00 10-508
10.6.107.1 Steering wheel position sensors electrical schematic 10-512
10.6.108 Code SA 03 SPN 521473 FMI 01 10-512
10.6.108.1 Steering wheel position sensors electrical schematic 10-515
10.6.109 Code SA 03 SPN 521473 FMI 02 10-516
10.6.109.1 Steering wheel position sensors electrical schematic 10-518
10.6.110 Code SA 03 SPN 521473 FMI 08 10-518
10.6.110.1 Steering wheel position sensors electrical schematic 10-520
10.6.111 Code SA 03 SPN 521473 FMI 12 10-521
10.6.111.1 Steering wheel position sensors electrical schematic 10-523
10.6.112 Code SA 03 SPN 521473 FMI 13 10-523
10.6.112.1 Steering wheel position sensors electrical schematic 10-524
10.6.113 Code SA 03 SPN 521475 FMI 02 10-524
10.6.113.1 Rear hitch controls electrical schematic 10-527
10.6.114 Code SA 03 SPN 521476 FMI 00 10-528
10.6.114.1 Implement oil filter bypass switch electrical schematic 10-530
10.6.115 Code SA 03 SPN 521476 FMI 01 10-531
10.6.115.1 Implement oil filter bypass switch electrical schematic 10-533
10.6.116 Code SA 03 SPN 521476 FMI 08 10-534
10.6.116.1 Implement oil filter bypass switch electrical schematic 10-536
10.6.117 Code SA 03 SPN 521476 FMI 13 10-537
10.6.117.1 Implement oil filter bypass switch electrical schematic 10-538

10.6.118 Code SA 03 SPN 521760 FMI 03 10-539
10.6.118.1 Implement oil filter bypass switch electrical schematic 10-541
10.6.119 Code SA 03 SPN 521760 FMI 05 10-542
10.6.119.1 Implement oil filter bypass switch electrical schematic 10-544
10.6.120 Code SA 03 SPN 521760 FMI 06 10-545
10.6.120.1 Implement oil filter bypass switch electrical schematic 10-548
10.7 05 Armrest module 10-550
10.7.1 Code SA 00 SPN 91 FMI 08 10-550
10.7.1.1 Decelerator pedal electrical schematic 10-551
10.7.2 Code SA 00 SPN 91 FMI 13 10-552
10.7.2.1 Decelerator pedal electrical schematic 10-553
10.7.3 Code SA 05 SPN 601 FMI 02 10-554
10.7.3.1 Power management switch electrical schematic 10-556
10.7.3.2 Power management switch 10-558
10.7.4 Code SA 05 SPN 601 FMI 03 10-559
10.7.4.1 Power management switch electrical schematic 10-560
10.7.4.2 Power management switch 10-562
10.7.5 Code SA 05 SPN 601 FMI 04 10-563
10.7.5.1 Power management switch electrical schematic 10-564
10.7.5.2 Power management switch 10-566
10.7.6 Code SA 05 SPN 601 FMI 05 10-567
10.7.6.1 Power management switch electrical schematic 10-569
10.7.6.2 Power management switch 10-571
10.7.7 Code SA 05 SPN 639 FMI 19 10-572
10.7.7.1 CAN electrical schematic 10-574
10.7.8 Code SA 05 SPN 689 FMI 02 10-575
10.7.8.1 Differential lock switch electrical schematic 10-578
10.7.9 Code SA 05 SPN 689 FMI 03 10-579
10.7.9.1 Differential lock switch electrical schematic 10-581
10.7.10 Code SA 05 SPN 689 FMI 04 10-582
10.7.10.1 Differential lock switch electrical schematic 10-584
10.7.11 Code SA 05 SPN 689 FMI 05 10-585
10.7.11.1 Differential lock switch electrical schematic 10-587
10.7.12 Code SA 05 SPN 898 FMI 00 10-588
10.7.12.1 Throttle lever position sensor electrical schematic 10-590
10.7.12.2 Hand throttle 10-591
10.7.13 Code SA 05 SPN 898 FMI 01 10-592
10.7.13.1 Throttle lever position sensor electrical schematic 10-593
10.7.13.2 Hand throttle 10-594
10.7.14 Code SA 05 SPN 1231 FMI 19 10-595
10.7.14.1 CAN 2 electrical schematic 10-596
10.7.15 Code SA 05 SPN 1504 FMI 31 10-599
10.7.15.1 Switch group electrical schematic 10-601
10.7.15.2 Operator present switch 10-603
10.7.16 Code SA 05 SPN 1787 FMI 03 10-603
10.7.16.1 Switch group electrical schematic 10-605
10.7.16.2 Maximum power switch 10-607
10.7.17 Code SA 05 SPN 1787 FMI 04 10-608
10.7.17.1 Switch group electrical schematic 10-609
10.7.17.2 Maximum power switch 10-611
10.7.18 Code SA 05 SPN 1787 FMI 05 10-612
10.7.18.1 Switch group electrical schematic 10-614
10.7.18.2 Maximum power switch 10-616
10.7.19 Code SA 05 SPN 1875 FMI 00 10-617
10.7.19.1 Hitch depth/implement lever position sensor electrical schematic 10-618
10.7.19.2 Hitch lever position sensor 10-619
10.7.20 Code SA 05 SPN 1875 FMI 01 10-620
10.7.20.1 Hitch depth/implement lever position sensor electrical schematic 10-621

10.7.20.2 Hitch lever position sensor 10-622
10.7.21 Code SA 05 SPN 1875 FMI 03 10-623
10.7.21.1 Hitch depth/implement lever position sensor electrical schematic 10-625
10.7.21.2 Hitch lever position sensor 10-626
10.7.22 Code SA 05 SPN 1875 FMI 04 10-626
10.7.22.1 Hitch depth/implement lever position sensor electrical schematic 10-628
10.7.22.2 Hitch lever position sensor 10-629
10.7.23 Code SA 05 SPN 1894 FMI 02 10-630
10.7.23.1 Power take-off switch electrical schematic 10-632
10.7.23.2 Power take-off switch 10-633
10.7.24 Code SA 05 SPN 1894 FMI 03 10-633
10.7.24.1 Power take-off switch electrical schematic 10-635
10.7.24.2 Power take-off switch 10-636
10.7.25 Code SA 05 SPN 1894 FMI 04 10-636
10.7.25.1 Power take-off switch electrical schematic 10-638
10.7.25.2 Power take-off switch 10-639
10.7.26 Code SA 05 SPN 1894 FMI 05 10-639
10.7.26.1 Power take-off switch electrical schematic 10-642
10.7.26.2 Power take-off switch 10-643
10.7.27 Code SA 05 SPN 1919 FMI 00 10-644
10.7.27.1 Auxiliary valve control sensors electrical schematic 10-645
10.7.27.2 Auxiliary valve control levers 10-646
10.7.28 Code SA 05 SPN 1919 FMI 01 10-647
10.7.28.1 Auxiliary valve control sensors electrical schematic 10-649
10.7.28.2 Auxiliary valve control levers 10-650
10.7.29 Code SA 05 SPN 1919 FMI 03 10-651
10.7.29.1 Auxiliary valve control sensors electrical schematic 10-653
10.7.29.2 Auxiliary valve control levers 10-654
10.7.30 Code SA 05 SPN 1919 FMI 04 10-655
10.7.30.1 Auxiliary valve control sensors electrical schematic 10-657
10.7.30.2 Auxiliary valve control levers 10-658
10.7.31 Code SA 05 SPN 1931 FMI 00 10-659
10.7.31.1 Auxiliary valve control sensors electrical schematic 10-660
10.7.31.2 Auxiliary valve control levers 10-661
10.7.32 Code SA 05 SPN 1931 FMI 01 10-662
10.7.32.1 Auxiliary valve control sensors electrical schematic 10-664
10.7.32.2 Auxiliary valve control levers 10-665
10.7.33 Code SA 05 SPN 1931 FMI 03 10-666
10.7.33.1 Auxiliary valve control sensors electrical schematic 10-668
10.7.33.2 Auxiliary valve control levers 10-669
10.7.34 Code SA 05 SPN 1931 FMI 04 10-670
10.7.34.1 Auxiliary valve control sensors electrical schematic 10-672
10.7.34.2 Auxiliary valve control levers 10-673
10.7.35 Code SA 05 SPN 1943 FMI 00 10-674
10.7.35.1 Auxiliary valve control sensors electrical schematic 10-675
10.7.35.2 Auxiliary valve control levers 10-676
10.7.36 Code SA 05 SPN 1943 FMI 01 10-677
10.7.36.1 Auxiliary valve control sensors electrical schematic 10-679
10.7.36.2 Auxiliary valve control levers 10-680
10.7.37 Code SA 05 SPN 1943 FMI 03 10-681
10.7.37.1 Auxiliary valve control sensors electrical schematic 10-683
10.7.37.2 Auxiliary valve control levers 10-684
10.7.38 Code SA 05 SPN 1943 FMI 04 10-685
10.7.38.1 Auxiliary valve control sensors electrical schematic 10-687
10.7.38.2 Auxiliary valve control levers 10-688
10.7.39 Code SA 05 SPN 1955 FMI 00 10-689
10.7.39.1 Auxiliary valve control sensors electrical schematic 10-690
10.7.39.2 Auxiliary valve control levers 10-691

10.7.40 Code SA 05 SPN 1955 FMI 01 10-692
10.7.40.1 Auxiliary valve control sensors electrical schematic 10-694
10.7.40.2 Auxiliary valve control levers 10-695
10.7.41 Code SA 05 SPN 1955 FMI 03 10-696
10.7.41.1 Auxiliary valve control sensors electrical schematic 10-698
10.7.41.2 Auxiliary valve control levers 10-699
10.7.42 Code SA 05 SPN 1955 FMI 04 10-700
10.7.42.1 Auxiliary valve control sensors electrical schematic 10-702
10.7.42.2 Auxiliary valve control levers 10-703
10.7.43 Code SA 05 SPN 1967 FMI 00 10-704
10.7.43.1 Auxiliary valve control sensors electrical schematic 10-705
10.7.43.2 Auxiliary valve control levers 10-706
10.7.44 Code SA 05 SPN 1967 FMI 01 10-707
10.7.44.1 Auxiliary valve control sensors electrical schematic 10-709
10.7.44.2 Auxiliary valve control levers 10-710
10.7.45 Code SA 05 SPN 1967 FMI 03 10-711
10.7.45.1 Auxiliary valve control sensors electrical schematic 10-713
10.7.45.2 Auxiliary valve control levers 10-714
10.7.46 Code SA 05 SPN 1967 FMI 04 10-715
10.7.46.1 Auxiliary valve control sensors electrical schematic 10-717
10.7.46.2 Auxiliary valve control levers 10-718
10.7.47 Code SA 05 SPN 1979 FMI 00 10-719
10.7.47.1 Auxiliary valve control sensors electrical schematic 10-720
10.7.47.2 Auxiliary valve control levers 10-721
10.7.48 Code SA 05 SPN 1979 FMI 01 10-722
10.7.48.1 Auxiliary valve control sensors electrical schematic 10-724
10.7.48.2 Auxiliary valve control levers 10-725
10.7.49 Code SA 05 SPN 1979 FMI 03 10-726
10.7.49.1 Auxiliary valve control sensors electrical schematic 10-728
10.7.49.2 Auxiliary valve control levers 10-729
10.7.50 Code SA 05 SPN 1979 FMI 04 10-730
10.7.50.1 Auxiliary valve control sensors electrical schematic 10-732
10.7.50.2 Auxiliary valve control levers 10-733
10.7.51 Code SA 05 SPN 2000 FMI 02 10-734
10.7.52 Code SA 5 SPN 2034 FMI 2 10-734
10.7.53 Code SA 5 SPN 2161 FMI 2 10-735
10.7.54 Code SA 5 SPN 2162 FMI 2 10-737
10.7.55 Code SA 05 SPN 2163 FMI 02 10-738
10.7.56 Code SA 05 SPN 2164 FMI 02 10-740
10.7.57 Code SA 05 SPN 2165 FMI 02 10-741
10.7.58 Code SA 05 SPN 2166 FMI 02 10-743
10.7.59 Code SA 05 SPN 2825 FMI 00 10-744
10.7.59.1 Transmission control lever electrical schematic 10-746
10.7.59.2 Transmission control lever 10-750
10.7.60 Code SA 05 SPN 2825 FMI 01 10-751
10.7.60.1 Transmission control lever electrical schematic 10-752
10.7.60.2 Transmission control lever 10-756
10.7.61 Code SA 05 SPN 2832 FMI 31 10-757
10.7.61.1 Switch group electrical schematic 10-759
10.7.62 Code SA 05 SPN 2858 FMI 02 10-760
10.7.63 Code SA 05 SPN 2970 FMI 02 10-761
10.7.63.1 Engine speed switch A/B electrical schematic 10-764
10.7.63.2 Engine speed switch A/B 10-766
10.7.64 Code SA 05 SPN 2970 FMI 03 10-767
10.7.64.1 Engine speed switch A/B electrical schematic 10-768
10.7.64.2 Engine speed switch A/B 10-770
10.7.65 Code SA 05 SPN 2970 FMI 04 10-771
10.7.65.1 Engine speed switch A/B electrical schematic 10-772

	10.7.65.2 Engine speed switch A/B	10-774
10.7.66	Code SA 05 SPN 2970 FMI 05	10-775
	10.7.66.1 Engine speed switch A/B electrical schematic	10-777
	10.7.66.2 Engine speed switch A/B	10-779
10.7.67	Code SA 05 SPN 2971 FMI 03	10-780
	10.7.67.1 Engine speed switch A/B electrical schematic	10-781
	10.7.67.2 Engine speed switch A/B	10-783
10.7.68	Code SA 05 SPN 2971 FMI 04	10-784
	10.7.68.1 Engine speed switch A/B electrical schematic	10-785
	10.7.68.2 Engine speed switch A/B	10-787
10.7.69	Code SA 05 SPN 2971 FMI 05	10-788
	10.7.69.1 Engine speed switch A/B electrical schematic	10-790
	10.7.69.2 Engine speed switch A/B	10-792
10.7.70	Code SA 05 SPN 3510 FMI 03	10-793
	10.7.70.1 1.7 volt switch supply electrical schematic	10-795
	10.7.70.2 1.7 volt switch supply	10-799
10.7.71	Code SA 05 SPN 3510 FMI 04	10-799
	10.7.71.1 1.7 volt switch supply electrical schematic	10-801
	10.7.71.2 1.7 volt switch supply	10-805
10.7.72	Code SA 05 SPN 3511 FMI 03	10-805
	10.7.72.1 3.3 volt switch supply electrical schematic	10-807
	10.7.72.2 3.3 volt switch supply	10-811
10.7.73	Code SA 05 SPN 3511 FMI 04	10-811
	10.7.73.1 3.3 volt switch supply electrical schematic	10-813
	10.7.73.2 3.3 volt switch supply	10-817
10.7.74	Code SA 05 SPN 3646 FMI 02	10-817
	10.7.74.1 Transmission control lever electrical schematic	10-820
	10.7.74.2 Transmission control lever	10-824
10.7.75	Code SA 05 SPN 3646 FMI 03	10-825
	10.7.75.1 Transmission control lever electrical schematic	10-826
	10.7.75.2 Transmission control lever	10-830
10.7.76	Code SA 05 SPN 3646 FMI 04	10-831
	10.7.76.1 Transmission control lever electrical schematic	10-832
	10.7.76.2 Transmission control lever	10-836
10.7.77	Code SA 05 SPN 3646 FMI 05	10-837
	10.7.77.1 Transmission control lever electrical schematic	10-839
	10.7.77.2 Transmission control lever	10-843
10.7.78	Code SA 05 SPN 3652 FMI 02	10-844
	10.7.78.1 Transmission control lever electrical schematic	10-846
	10.7.78.2 Upshift switch	10-850
10.7.79	Code SA 05 SPN 3652 FMI 03	10-851
	10.7.79.1 Transmission control lever electrical schematic	10-852
	10.7.79.2 Upshift switch	10-856
10.7.80	Code SA 05 SPN 3652 FMI 04	10-857
	10.7.80.1 Transmission control lever electrical schematic	10-858
	10.7.80.2 Upshift switch	10-862
10.7.81	Code SA 05 SPN 3652 FMI 05	10-863
	10.7.81.1 Transmission control lever electrical schematic	10-865
	10.7.81.2 Upshift switch	10-869
10.7.82	Code SA 05 SPN 3653 FMI 02	10-870
	10.7.82.1 Transmission control lever electrical schematic	10-872
	10.7.82.2 Downshift switch	10-876
10.7.83	Code SA 05 SPN 3653 FMI 03	10-877
	10.7.83.1 Transmission control lever electrical schematic	10-878
	10.7.83.2 Downshift switch	10-882
10.7.84	Code SA 05 SPN 3653 FMI 04	10-883
	10.7.84.1 Transmission control lever electrical schematic	10-884
	10.7.84.2 Downshift switch	10-888

10.7.85 Code SA 05 SPN 3653 FMI 05 10-889
10.7.85.1 Transmission control lever electrical schematic 10-891
10.7.85.2 Downshift switch 10-895
10.7.86 Code SA 05 SPN 520193 FMI 02 10-896
10.7.86.1 Transmission control lever electrical schematic 10-898
10.7.86.2 One touch switch 10-902
10.7.87 Code SA 05 SPN 520193 FMI 03 10-903
10.7.87.1 Transmission control lever electrical schematic 10-904
10.7.87.2 One touch switch 10-908
10.7.88 Code SA 05 SPN 520193 FMI 04 10-909
10.7.88.1 Transmission control lever electrical schematic 10-910
10.7.88.2 One touch switch 10-914
10.7.89 Code SA 05 SPN 520193 FMI 05 10-915
10.7.89.1 Transmission control lever electrical schematic 10-917
10.7.89.2 One touch switch 10-921
10.7.90 Code SA 05 SPN 520194 FMI 02 10-922
10.7.90.1 Auto-Guide™ switch electrical schematic 10-924
10.7.90.2 Roading lockout switch 10-928
10.7.91 Code SA 05 SPN 520194 FMI 03 10-929
10.7.91.1 Auto-Guide™ switch electrical schematic 10-930
10.7.91.2 Roading lockout switch 10-934
10.7.92 Code SA 05 SPN 520194 FMI 04 10-935
10.7.92.1 Auto-Guide™ switch electrical schematic 10-936
10.7.92.2 Roading lockout switch 10-940
10.7.93 Code SA 05 SPN 520194 FMI 05 10-941
10.7.93.1 Auto-Guide™ switch electrical schematic 10-943
10.7.93.2 Roading lockout switch 10-947
10.7.94 Code SA 05 SPN 520196 FMI 31 10-948
10.7.95 Code SA 05 SPN 520197 FMI 02 10-948
10.7.95.1 Auto-Guide™ switch electrical schematic 10-950
10.7.95.2 Auto-Guide™ engage switch 10-954
10.7.96 Code SA 05 SPN 520197 FMI 03 10-955
10.7.96.1 Auto-Guide™ switch electrical schematic 10-956
10.7.96.2 Auto-Guide™ engage switch 10-960
10.7.97 Code SA 05 SPN 520197 FMI 04 10-961
10.7.97.1 Auto-Guide™ switch electrical schematic 10-962
10.7.97.2 Auto-Guide™ engage switch 10-966
10.7.98 Code SA 05 SPN 520197 FMI 05 10-967
10.7.98.1 Auto-Guide™ switch electrical schematic 10-969
10.7.98.2 Auto-Guide™ engage switch 10-973
10.7.99 Code SA 05 SPN 521474 FMI 02 10-974
10.7.99.1 Hitch raise/lower switch electrical schematic 10-976
10.7.99.2 Hitch raise/lower switch 10-977
10.7.100 Code SA 05 SPN 521474 FMI 03 10-978
10.7.100.1 Hitch raise/lower switch electrical schematic 10-980
10.7.100.2 Hitch raise/lower switch 10-981
10.7.101 Code SA 05 SPN 521474 FMI 04 10-982
10.7.101.1 Hitch raise/lower switch electrical schematic 10-983
10.7.101.2 Hitch raise/lower switch 10-984
10.7.102 Code SA 05 SPN 521474 FMI 05 10-985
10.7.102.1 Hitch raise/lower switch electrical schematic 10-987
10.7.102.2 Hitch raise/lower switch 10-988
10.7.103 Code SA 05 SPN 521893 FMI 03 10-989
10.7.103.1 Hitch raise/lower switch electrical schematic 10-990
10.7.103.2 Hitch raise/lower switch 10-991
10.7.104 Code SA 05 SPN 521893 FMI 04 10-992
10.7.104.1 Hitch raise/lower switch electrical schematic 10-993
10.7.104.2 Hitch raise/lower switch 10-994

10.7.105 Code SA 05 SPN 521893 FMI 05 10-995
10.7.105.1 Hitch raise/lower switch electrical schematic 10-997
10.7.105.2 Hitch raise/lower switch 10-998
10.7.106 Code SA 05 SPN 521894 FMI 03 10-999
10.7.106.1 Power take-off switch electrical schematic 10-1000
10.7.106.2 Power take-off switch 10-1001
10.7.107 Code SA 05 SPN 521894 FMI 04 10-1001
10.7.107.1 Power take-off switch electrical schematic 10-1003
10.7.107.2 Power take-off switch 10-1004
10.7.108 Code SA 05 SPN 521894 FMI 05 10-1004
10.7.108.1 Power take-off switch electrical schematic 10-1007
10.7.108.2 Power take-off switch 10-1008

10.8 19 Steering valve module 10-1009

10.8.1 Code SA 19 SPN 84 FMI 12 10-1009
10.8.1.1 Steering assist module electrical schematic 10-1011
10.8.2 Code SA 19 SPN 611 FMI 00 10-1012
10.8.2.1 Steering assist module electrical schematic 10-1014
10.8.3 Code SA 19 SPN 612 FMI 00 10-1015
10.8.3.1 Steering assist module electrical schematic 10-1017
10.8.4 Code SA 19 SPN 613 FMI 14 10-1018
10.8.4.1 Steering assist module electrical schematic 10-1021
10.8.5 Code SA 19 SPN 614 FMI 00 10-1022
10.8.5.1 Steering assist module electrical schematic 10-1024
10.8.6 Code SA 19 SPN 615 FMI 14 10-1025
10.8.6.1 Steering assist module electrical schematic 10-1028
10.8.7 Code SA 19 SPN 627 FMI 00 10-1029
10.8.7.1 Steering assist module electrical schematic 10-1031
10.8.8 Code SA 19 SPN 627 FMI 04 10-1032
10.8.8.1 Steering assist module electrical schematic 10-1034
10.8.9 Code SA 19 SPN 1079 FMI 00 10-1035
10.8.9.1 Steering assist module electrical schematic 10-1037
10.8.10 Code SA 19 SPN 1083 FMI 00 10-1038
10.8.10.1 Steering assist module electrical schematic 10-1040
10.8.11 Code SA 19 SPN 1084 FMI 00 10-1041
10.8.11.1 Steering assist module electrical schematic 10-1043
10.8.12 Code SA 19 SPN 1084 FMI 04 10-1044
10.8.12.1 Steering assist module electrical schematic 10-1046
10.8.13 Code SA 19 SPN 1807 FMI 08 10-1047
10.8.13.1 Steering assist module electrical schematic 10-1049
10.8.14 Code SA 19 SPN 1807 FMI 09 10-1050
10.8.14.1 Steering assist module electrical schematic 10-1052

10.9 161 Auxiliary valve 1 module 10-1054

10.9.1 Code SA 161 SPN 158 FMI 00 10-1054
10.9.1.1 Auxiliary valves electrical schematic 10-1055
10.9.2 Code SA 161 SPN 158 FMI 18 10-1058
10.9.2.1 Auxiliary valves electrical schematic 10-1060
10.9.3 Code SA 161 SPN 628 FMI 12 10-1063
10.9.3.1 CAN 2 electrical schematic 10-1064
10.9.4 Code SA 161 SPN 639 FMI 19 10-1067
10.9.5 Code SA 161 SPN 701 FMI 05 10-1068
10.9.6 Code SA 161 SPN 701 FMI 06 10-1069
10.9.7 Code SA 161 SPN 702 FMI 05 10-1071
10.9.8 Code SA 161 SPN 702 FMI 06 10-1072

10.10 162 Auxiliary valve 2 module 10-1074

10.10.1 Code SA 162 SPN 158 FMI 00 10-1074
10.10.1.1 Auxiliary valves electrical schematic 10-1075
10.10.2 Code SA 162 SPN 158 FMI 18 10-1078
10.10.2.1 Auxiliary valves electrical schematic 10-1080

10.10.3 Code SA 162 SPN 628 FMI 12 10-1083
10.10.3.1 CAN 2 electrical schematic 10-1084
10.10.4 Code SA 162 SPN 639 FMI 19 10-1087
10.10.5 Code SA 162 SPN 701 FMI 05 10-1088
10.10.6 Code SA 162 SPN 701 FMI 06 10-1089
10.10.7 Code SA 162 SPN 702 FMI 05 10-1091
10.10.8 Code SA 162 SPN 702 FMI 06 10-1092
10.11 163 Auxiliary valve 3 module 10-1094
10.11.1 Code SA 163 SPN 158 FMI 00 10-1094
10.11.1.1 Auxiliary valves electrical schematic 10-1095
10.11.2 Code SA 163 SPN 158 FMI 18 10-1098
10.11.2.1 Auxiliary valves electrical schematic 10-1100
10.11.3 Code SA 163 SPN 628 FMI 12 10-1103
10.11.3.1 CAN 2 electrical schematic 10-1104
10.11.4 Code SA 163 SPN 639 FMI 19 10-1107
10.11.5 Code SA 163 SPN 701 FMI 05 10-1108
10.11.6 Code SA 163 SPN 701 FMI 06 10-1109
10.11.7 Code SA 163 SPN 702 FMI 05 10-1111
10.11.8 Code SA 163 SPN 702 FMI 06 10-1112
10.12 164 Auxiliary valve 4 module 10-1114
10.12.1 Code SA 164 SPN 158 FMI 00 10-1114
10.12.1.1 Auxiliary valves electrical schematic 10-1115
10.12.2 Code SA 164 SPN 158 FMI 18 10-1118
10.12.2.1 Auxiliary valves electrical schematic 10-1120
10.12.3 Code SA 164 SPN 628 FMI 12 10-1123
10.12.3.1 CAN 2 electrical schematic 10-1124
10.12.4 Code SA 164 SPN 639 FMI 19 10-1127
10.12.5 Code SA 164 SPN 701 FMI 05 10-1128
10.12.6 Code SA 164 SPN 701 FMI 06 10-1129
10.12.7 Code SA 164 SPN 702 FMI 05 10-1131
10.12.8 Code SA 164 SPN 702 FMI 06 10-1132
10.13 165 Auxiliary valve 5 module 10-1134
10.13.1 Code SA 165 SPN 158 FMI 00 10-1134
10.13.1.1 Auxiliary valves electrical schematic 10-1135
10.13.2 Code SA 165 SPN 158 FMI 18 10-1138
10.13.2.1 Auxiliary valves electrical schematic 10-1140
10.13.3 Code SA 165 SPN 628 FMI 12 10-1143
10.13.3.1 CAN 2 electrical schematic 10-1144
10.13.4 Code SA 165 SPN 639 FMI 19 10-1147
10.13.5 Code SA 165 SPN 701 FMI 05 10-1148
10.13.6 Code SA 165 SPN 701 FMI 06 10-1149
10.13.7 Code SA 165 SPN 702 FMI 05 10-1151
10.13.8 Code SA 165 SPN 702 FMI 06 10-1152
10.14 166 Auxiliary valve 6 module 10-1154
10.14.1 Code SA 166 SPN 158 FMI 00 10-1154
10.14.1.1 Auxiliary valves electrical schematic 10-1155
10.14.2 Code SA 166 SPN 158 FMI 18 10-1158
10.14.2.1 Auxiliary valves electrical schematic 10-1160
10.14.3 Code SA 166 SPN 628 FMI 12 10-1163
10.14.3.1 CAN 2 electrical schematic 10-1164
10.14.4 Code SA 166 SPN 639 FMI 19 10-1167
10.14.5 Code SA 166 SPN 701 FMI 05 10-1168
10.14.6 Code SA 166 SPN 701 FMI 06 10-1169
10.14.7 Code SA 166 SPN 702 FMI 05 10-1171
10.14.8 Code SA 166 SPN 702 FMI 06 10-1172
10.15 171 Three-point hitch valve module 10-1174
10.15.1 Code SA 171 SPN 158 FMI 00 10-1174

10.15.1.1 3-Point linkage valve electrical schematic 10-1175
10.15.2 Code SA 171 SPN 158 FMI 18 10-1178
10.15.2.1 3-Point linkage valve electrical schematic 10-1180
10.15.3 Code SA 171 SPN 628 FMI 12 10-1183
10.15.4 Code SA 171 SPN 639 FMI 19 10-1184
10.15.4.1 3-Point linkage valve electrical schematic 10-1186
10.15.5 Code SA 171 SPN 701 FMI 05 10-1189
10.15.6 Code SA 171 SPN 701 FMI 06 10-1191
10.15.7 Code SA 171 SPN 702 FMI 05 10-1192
10.15.8 Code SA 171 SPN 702 FMI 06 10-1193
10.16 175 Unassigned auxiliary valve module 10-1195
10.16.1 Code SA 175 SPN 639 FMI 19 10-1195
10.17 208 Front lighting module 10-1196
10.17.1 Code SA 208 SPN 2208 FMI 02 10-1196
10.17.2 Code SA 208 SPN 2354 FMI 05 10-1198
10.17.2.1 Front lighting electrical schematic 10-1200
10.17.3 Code SA 208 SPN 2354 FMI 06 10-1201
10.17.3.1 Front lighting electrical schematic 10-1203
10.17.4 Code SA 208 SPN 2368 FMI 05 10-1204
10.17.4.1 Chassis turn signal switch circuits electrical schematic 10-1206
10.17.5 Code SA 208 SPN 2368 FMI 06 10-1207
10.17.5.1 Chassis turn signal switch circuits electrical schematic 10-1208
10.17.6 Code SA 208 SPN 2370 FMI 05 10-1209
10.17.6.1 Chassis turn signal switch circuits electrical schematic 10-1211
10.17.7 Code SA 208 SPN 2370 FMI 06 10-1212
10.17.7.1 Chassis turn signal switch circuits electrical schematic 10-1213
10.17.8 Code SA 208 SPN 2653 FMI 05 10-1214
10.17.8.1 Headlamp circuits electrical schematic 10-1215
10.17.9 Code SA 208 SPN 2653 FMI 06 10-1216
10.17.9.1 Headlamp circuits electrical schematic 10-1217
10.17.10 Code SA 208 SPN 2655 FMI 05 10-1218
10.17.10.1 Headlamp circuits electrical schematic 10-1219
10.17.11 Code SA 208 SPN 2655 FMI 06 10-1220
10.17.11.1 Headlamp circuits electrical schematic 10-1221
10.17.12 Code SA 208 SPN 4011 FMI 05 10-1222
10.17.12.1 Headlamp circuits electrical schematic 10-1223
10.17.13 Code SA 208 SPN 4011 FMI 06 10-1224
10.17.13.1 Headlamp circuits electrical schematic 10-1225
10.18 209 Roof lighting module 10-1227
10.18.1 Code SA 209 SPN 2362 FMI 05 10-1227
10.18.1.1 Front lighting electrical schematic 10-1229
10.18.2 Code SA 209 SPN 2362 FMI 06 10-1230
10.18.2.1 Front lighting electrical schematic 10-1232
10.18.3 Code SA 209 SPN 2368 FMI 05 10-1233
10.18.3.1 Turn signal electrical schematic 10-1234
10.18.4 Code SA 209 SPN 2368 FMI 06 10-1235
10.18.4.1 Turn signal electrical schematic 10-1236
10.18.5 Code SA 209 SPN 2370 FMI 05 10-1237
10.18.5.1 Turn signal electrical schematic 10-1238
10.18.6 Code SA 209 SPN 2370 FMI 06 10-1239
10.18.6.1 Turn signal electrical schematic 10-1240
10.18.7 Code SA 209 SPN 2209 FMI 02 10-1241
10.18.7.1 Roof lighting module electrical schematic 10-1242
10.18.8 Code SA 209 SPN 2386 FMI 05 10-1243
10.18.8.1 Beacon electrical schematic 10-1244
10.18.9 Code SA 209 SPN 2386 FMI 06 10-1245
10.18.9.1 Beacon electrical schematic 10-1246
10.18.10 Code SA 209 SPN 2873 FMI 02 10-1246

10.18.10.1 Front lighting electrical schematic 10-1249
10.18.11 Code SA 209 SPN 2875 FMI 02 10-1250
10.18.11.1 Hazard lamp switch electrical schematic 10-1252
10.18.12 Code SA 209 SPN 3507 FMI 06 10-1253
10.18.12.1 Main power relay electrical schematic 10-1255
10.18.13 Code SA 209 SPN 3508 FMI 05 10-1256
10.18.13.1 Main power relay electrical schematic 10-1258
10.18.14 Code SA 209 SPN 3508 FMI 06 10-1259
10.18.14.1 Main power relay electrical schematic 10-1261
10.18.15 Code SA 209 SPN 3976 FMI 06 10-1262
10.18.15.1 Dome lamp electrical schematic 10-1263
10.18.16 Code SA 209 SPN 882 FMI 05 10-1264
10.18.16.1 License plate lamp electrical schematic 10-1266
10.18.17 Code SA 209 SPN 882 FMI 06 10-1267
10.18.17.1 License plate lamp electrical schematic 10-1268

10.19 210 Rear lighting module 10-1270

10.19.1 Code SA 210 SPN 46 FMI 00 10-1270
10.19.1.1 Air system pressure sensor electrical schematic 10-1272
10.19.2 Code SA 210 SPN 46 FMI 01 10-1273
10.19.2.1 Air system pressure sensor electrical schematic 10-1275
10.19.3 Code SA 210 SPN 46 FMI 03 10-1276
10.19.3.1 Air system pressure sensor electrical schematic 10-1278
10.19.4 Code SA 210 SPN 46 FMI 04 10-1279
10.19.4.1 Air system pressure sensor electrical schematic 10-1281
10.19.5 Code SA 210 SPN 2210 FMI 02 10-1282
10.19.5.1 Rear lighting module address schematic 10-1284
10.19.6 Code SA 210 SPN 2368 FMI 05 10-1284
10.19.6.1 Turn signal lamps electrical schematic 10-1286
10.19.7 Code SA 210 SPN 2368 FMI 06 10-1287
10.19.7.1 Turn signal lamps electrical schematic 10-1289
10.19.8 Code SA 210 SPN 2370 FMI 05 10-1290
10.19.8.1 Turn signal lamps electrical schematic 10-1292
10.19.9 Code SA 210 SPN 2370 FMI 06 10-1293
10.19.9.1 Turn signal lamps electrical schematic 10-1295
10.19.10 Code SA 210 SPN 2376 FMI 05 10-1296
10.19.10.1 Turn signal lamps electrical schematic 10-1298
10.19.11 Code SA 210 SPN 2376 FMI 06 10-1299
10.19.11.1 Turn signal lamps electrical schematic 10-1301
10.19.12 Code SA 210 SPN 2392 FMI 05 10-1302
10.19.12.1 Reverse lamps electrical schematic 10-1304
10.19.13 Code SA 210 SPN 2392 FMI 06 10-1305
10.19.13.1 Reverse lamps electrical schematic 10-1306
10.19.14 Code SA 210 SPN 2404 FMI 05 10-1307
10.19.14.1 Turn signal lamps electrical schematic 10-1309
10.19.15 Code SA 210 SPN 2404 FMI 06 10-1310
10.19.15.1 Turn signal lamps electrical schematic 10-1312

10.1 General information

10.1.1 Introduction to the electrical system

The electrical system can be divided into four sections:

- Engine
- Operator's station
- Electro-hydraulics
- Lighting

The current to the electrical systems is supplied by high output alternators with built-in regulators.

The 12-volt batteries are wired in parallel and have a double negative ground - one to the engine frame and one to the starter.

10.1.2 Basic electrical troubleshooting procedures

Procedure

1. Talk with the owner/operator to determine what conditions were present when the diagnostic code occurred.
2. Write down the diagnostic code and clear the diagnostic code. If the diagnostic code is not active, try to duplicate the diagnostic code.
3. Check the wiring harnesses and connectors related to the diagnostic code.
4. Adjust all the related components and calibrate the related components.
5. Check for new software releases related to the diagnostic code.
6. Most bad connections occur at or near the connectors. Make sure the connectors are completely put into the connector housing.
7. If the lock on the connector is damaged or will not hold the connector in the connector housing, replace the connector.
8. Move the wires or harness from side to side. Moving the wires from side to side can make intermittent contact and will help find the general area of the failure.

10.1.3 Electrical service tools

The following tools are used to troubleshoot the electrical systems.

The electrical diagnostic tool (EDT) communicates with the electronic control module (ECM) on the controller area network (CAN). The EDT has many diagnostic operations. The EDT is used for:

- Machine calibrations
- ECM software installation
- Machine configuration changes
- Displaying and troubleshooting diagnostic codes
- Monitoring and testing the machine electrical components
- Monitoring and testing the machine performance



Fig. 1

The digital multimeter can measure very low ohm values and voltage values.



Fig. 2

10.1.4 Test a fuse

Procedure

1. Pull the fuse from the slot and check for broken pins, corroded contacts and a broken internal connection.
2. If broken pins, corroded contacts, or a broken internal connection are found, replace the fuse.
3. If no broken pins, no corroded contacts, and no broken internal connection are found, use a digital multimeter to check the fuse for continuity.

Option	Description
Less than 5 ohms	Fuse is good
More than 5 ohms	Fuse is bad

10.1.5 Test a diode

Procedure

1. Use a multimeter that is set to diode scale.
2. Connect the multimeter to the diode and listen for the multimeter to beep.
3. Reverse the multimeter connections to the diode and listen for the multimeter to beep.

Result

If the diode is good the multimeter will beep with leads connected one direction and will not beep with leads connected in the reverse direction.

IMPORTANT: *The diode must be installed in the same direction as the one that is removed. If not, other parts of the machine can be damaged.*

10.1.6 Test a relay

Procedure

1. Pull the black cube relay out of the slot it is located in.
2. Check the relay for broken pins or corroded contacts.
3. Connect power to one of the control circuit contacts on the relay.
4. Connect the other control contact to ground and if the relay is good, a click will be heard.

5. If no click is heard, reverse the connections and if the relay is good, a click will be heard.
6. If no click is heard after reversing the connections, the relay is bad. Replace the bad relay with a good relay.

10.2 Electrical system components

10.2.1 Remove the batteries

WARNING:
A lead acid battery will generate flammable and explosive gases. Keep sparks and flames away from the battery. Sulfuric acid in battery electrolyte is poisonous. Wear personal protective gear when working with batteries. Sulfuric acid is strong enough to burn skin, eat holes in clothing, and cause blindness if splashed into eyes. If acid contacts eyes, skin or clothing, flush with water immediately. If acid contacts eyes get immediate medical help.

CAUTION:
Make sure to wear correct personal protective gear for working with batteries.

NOTE: *Park the machine on a solid, level surface. Stop the engine, apply the parking brake, and take the key with you.*

Procedure

1. Turn the battery disconnect switch key to the off position to disconnect battery power. Remove the battery disconnect switch key.

2. Open the engine cover all the way.

CAUTION:
Safely prop open the engine cover with the prop rod. Closing the engine cover makes a pinch point that can cause serious bodily injury.

3. Lift up the terminal boots (1) and loosen the nuts on the terminal clamps. Remove the negative cables (2).

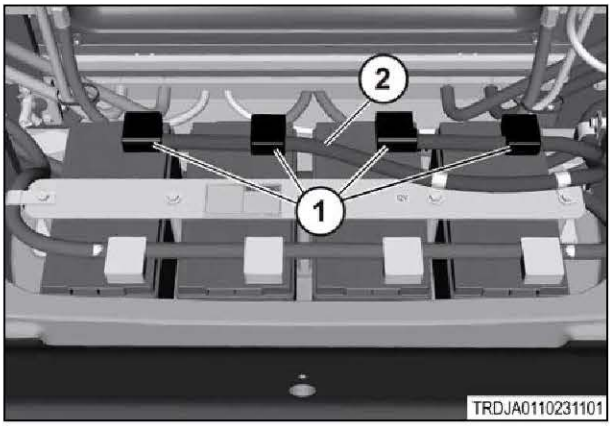

Fig. 3

4. Lift up the terminal boots (2) and loosen the nuts on the terminal clamps. Remove the positive cable (1). Remove the swivel spacer (3) as necessary.

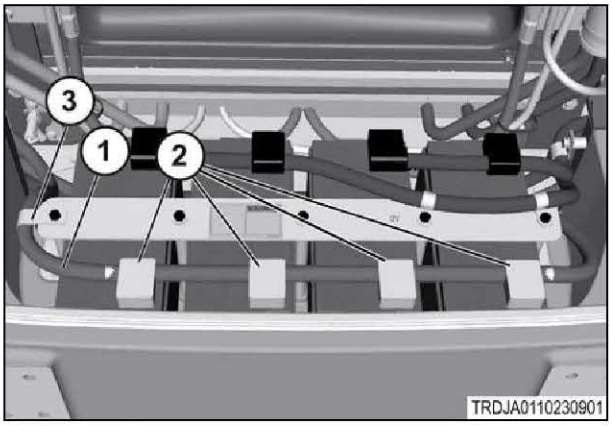

Fig. 4

5. Remove the five bolts and cable clamps (1) and remove the battery mount (2).

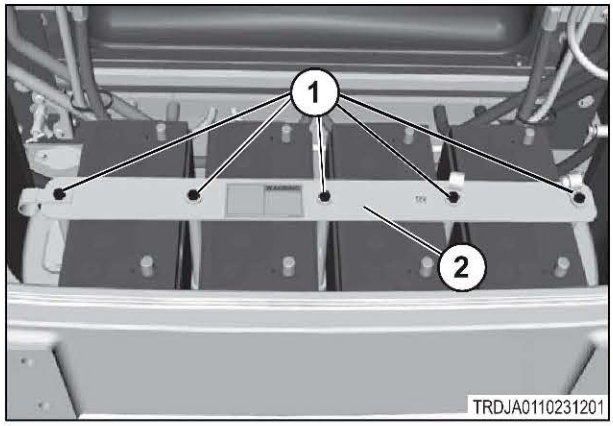

Fig. 5

6. Remove the batteries (1) and set on a dry level surface.

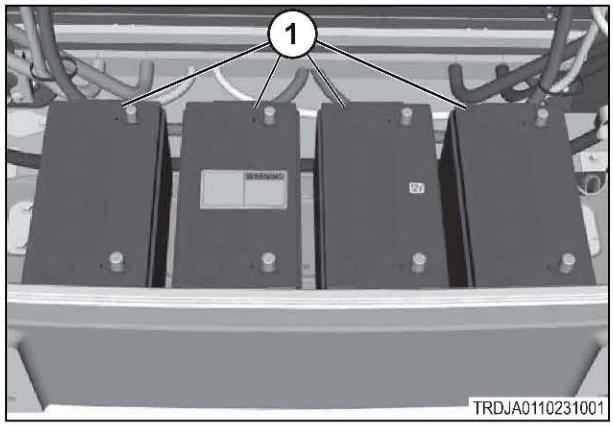

Fig. 6

10.2.2 Install the batteries

WARNING:
A lead acid battery will generate flammable and explosive gases. Keep sparks and flames away from the battery. Sulfuric acid in battery electrolyte is poisonous. It is strong enough to burn skin, eat holes in clothing, and cause blindness if splashed into eyes. If acid contacts eyes, skin or clothing, flush with water immediately. If acid contacts eyes get immediate medical help.

CAUTION:
Be sure to wear the correct personal protective gear for working with batteries.

Procedure

1. Install the batteries (1) in the frame of the machine.

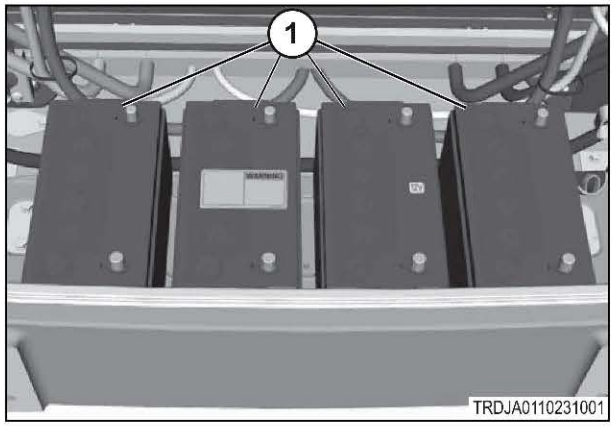

Fig. 7

2. Fasten the battery mount (2), and the hardware with spacers (1) to the frame. Tighten the bolts to 8 Nm (71 lbf in)

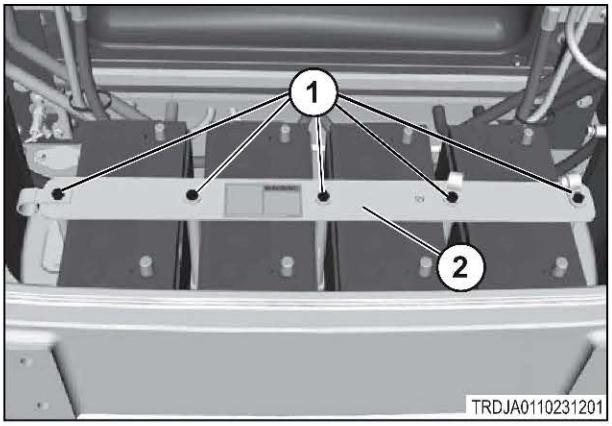

Fig. 8

3. Install the positive cable (1) on the terminals and tighten the nuts on the terminal clamps to 7.2 Nm (5.3 lbf ft). Install the terminal covers (2) on the terminal clamps. Use the hose clamp (3) to hold the hose.

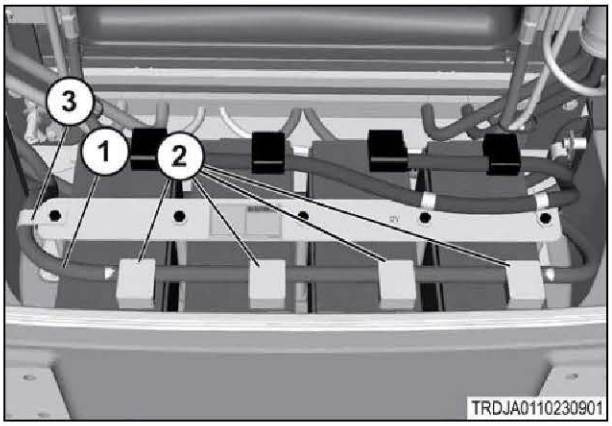

Fig. 9

4. Install the negative cables (2) on the terminals and tighten the nuts on the terminal clamps to 7.2 Nm (5.3 lbf ft). Install the terminal covers (1) on the terminal clamps.

5. Close the engine cover.

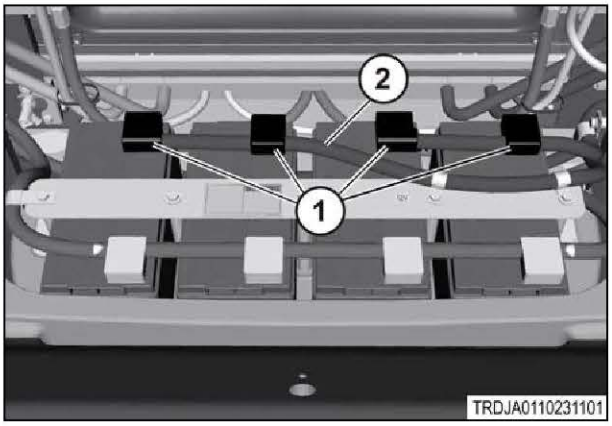

Fig. 10

6. Install the battery disconnect switch key to the on position(1).

NOTE:
Battery disconnect switch is shown in the on position.

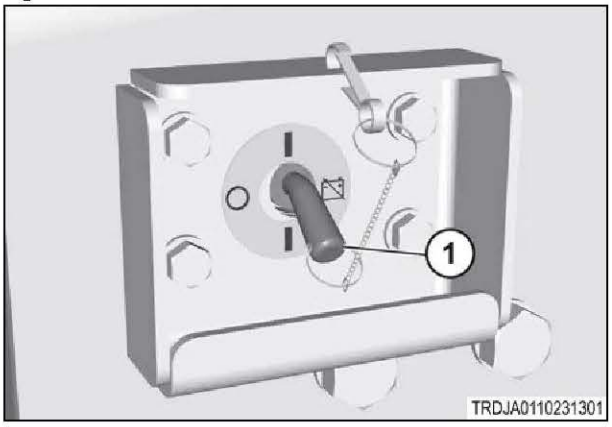

Fig. 11

10.2.3 Remove the headlamp

Procedure

1. Park the machine on a solid, level surface. Stop the engine, apply the parking brake, and take the key with you.

2. Turn the battery disconnect switch key (1) counterclockwise to disconnect the battery power.

   NOTE:
   The battery disconnect switch is shown in the off position.

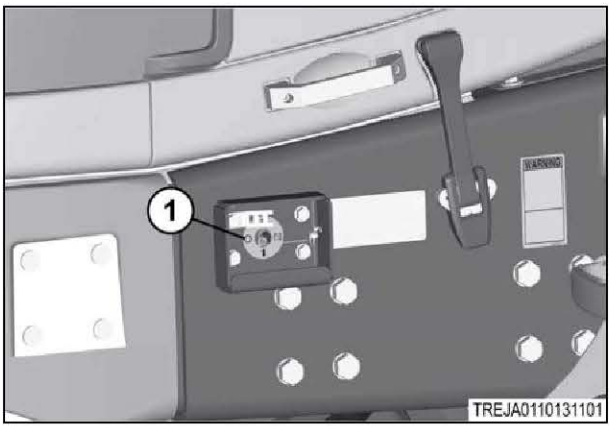

Fig. 12

3. Remove the battery disconnect switch key (1).

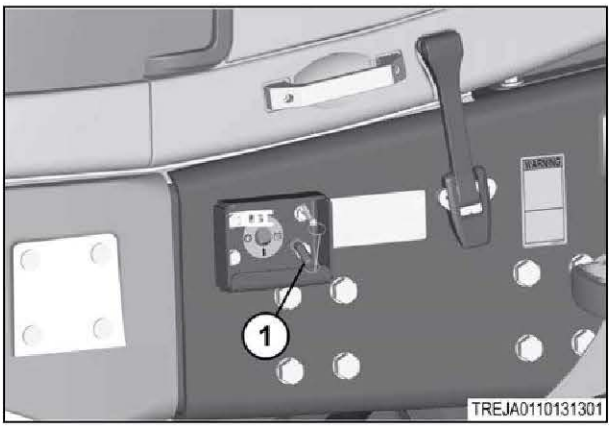

Fig. 13

4. **CAUTION:**
   Safely prop open the engine cover. Closing engine cover creates a pinch point that can cause serious bodily injury.

   Release both side latches (1) and open the engine cover (2) all the way.

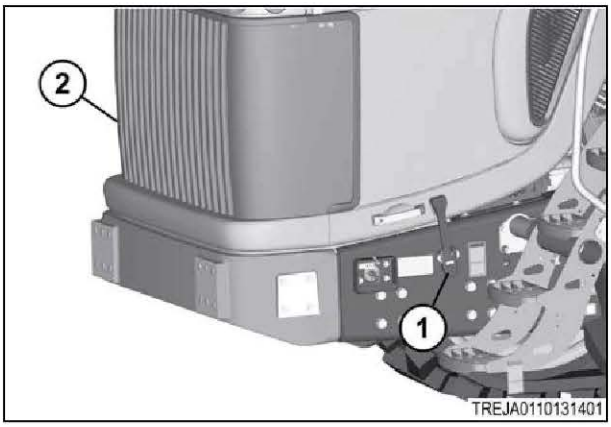

Fig. 14

5. Disconnect the wire harness (1) from the headlamps.

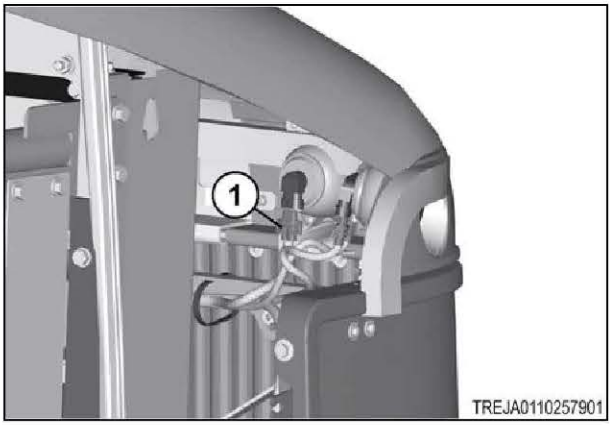

Fig. 15

6. Remove the hardware (1) and the headlamps (2).

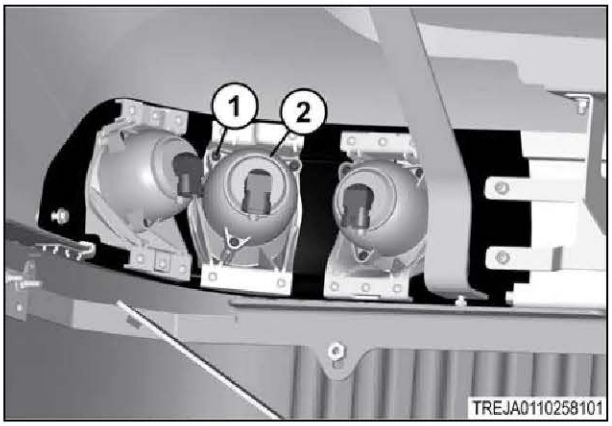

Fig. 16

7. Remove the hardware (1) and the headlamp fixtures (2).

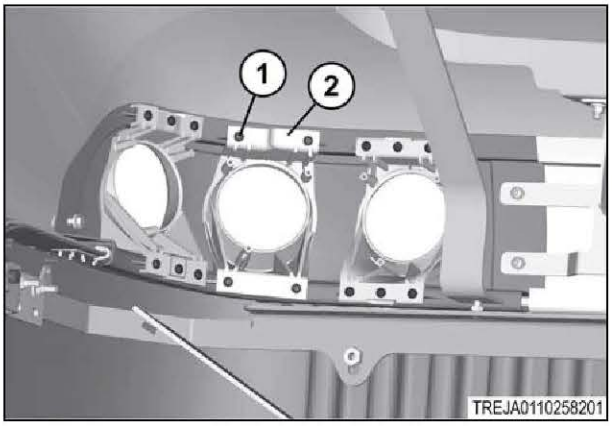

Fig. 17

8. Remove the hardware (1) and the headlamp housings (2).

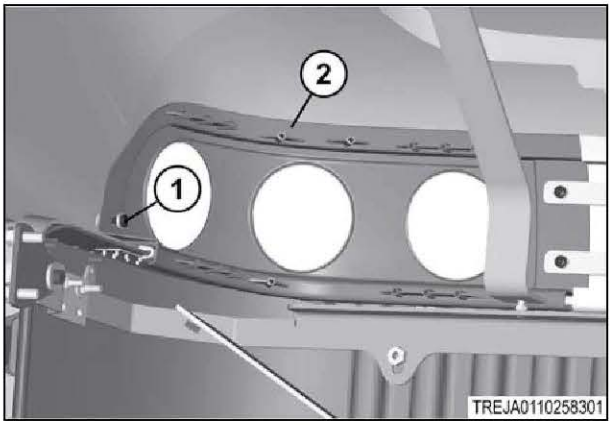

Fig. 18

10.2.4 Install the headlamp

Procedure

1. Install the headlamp housings (2) with the hardware (1).

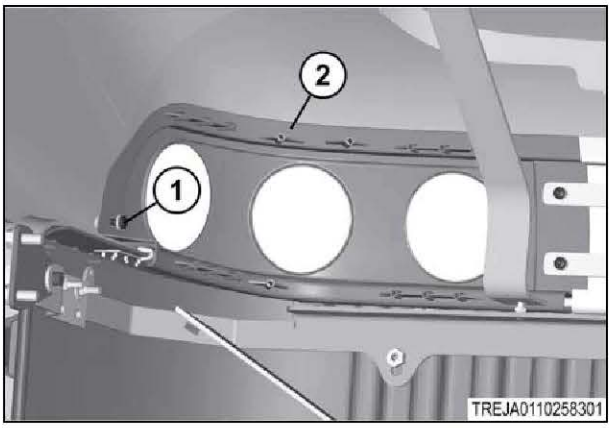

Fig. 19

2. Install the headlamp fixtures (2) with the hardware (1).

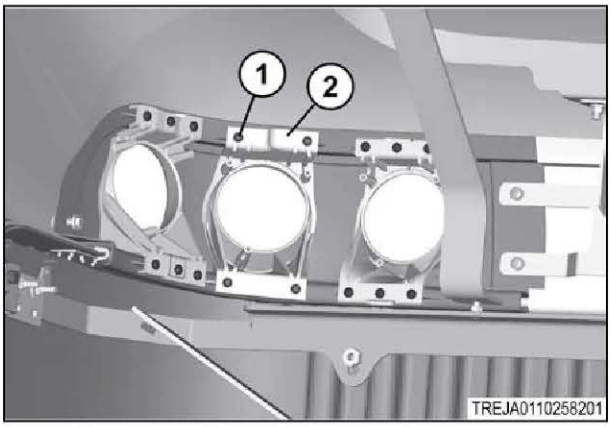

Fig. 20

3. Install the headlamps (2) with the hardware (1).

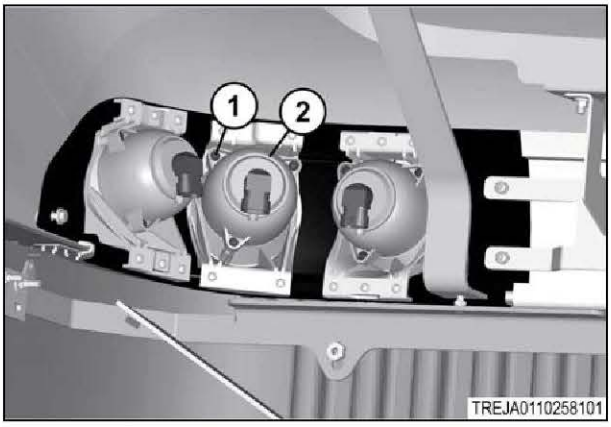

Fig. 21

4. Connect the wire harness (1) to the headlamps.

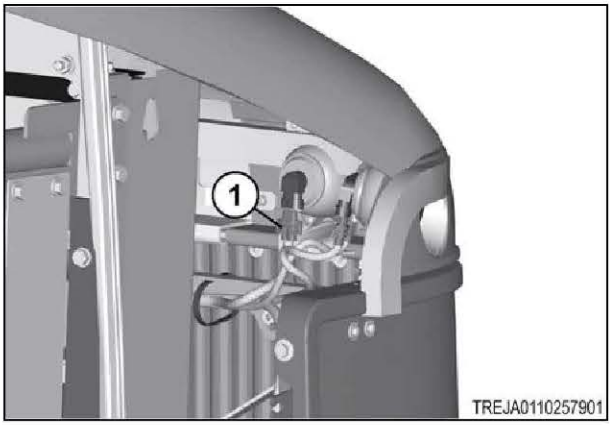

Fig. 22

5. Close the engine cover (2) and connect both side latches (1).

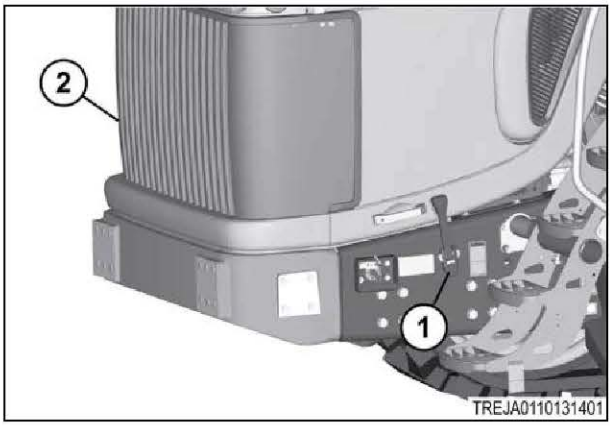

Fig. 23

6. Install the battery disconnect switch key (1).

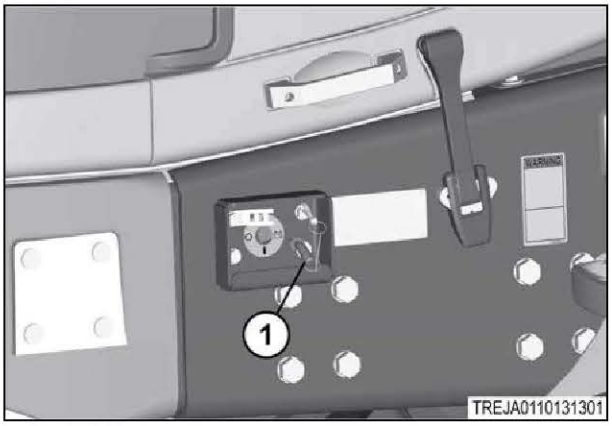

Fig. 24

7. Turn the battery disconnect switch key (1) clockwise to connect the battery power.

NOTE:
The battery disconnect switch is shown in the on position.

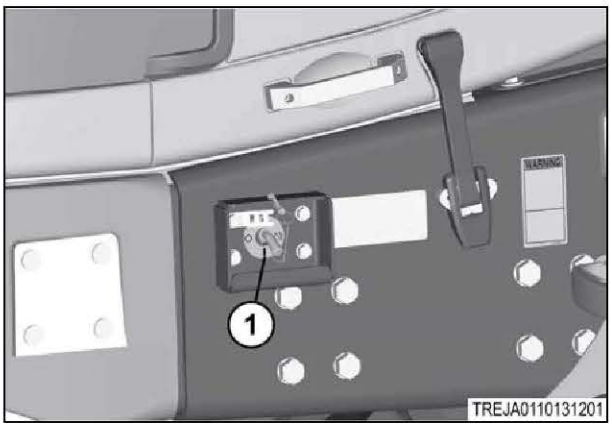

Fig. 25

10.2.5 Remove the headlamps - MY16

Procedure

1. Park the machine on a solid, level surface.
2. Apply the parking brake, stop the engine, and take the key with you.
3. Turn off the battery disconnect switch key.
4. Remove the battery disconnect switch key.
5. Release the side latches, open the engine cover all the way, and connect the engine cover support arm.

CAUTION:
Safely prop open the engine cover. Closing engine cover creates a pinch point that can cause serious bodily injury.

6. Disconnect the wire harness (1) from the headlamps.

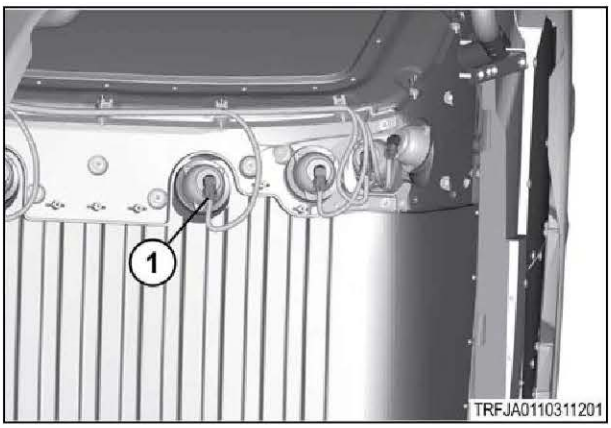

Fig. 26

7. Remove the hardware (1) and the headlamps (2).

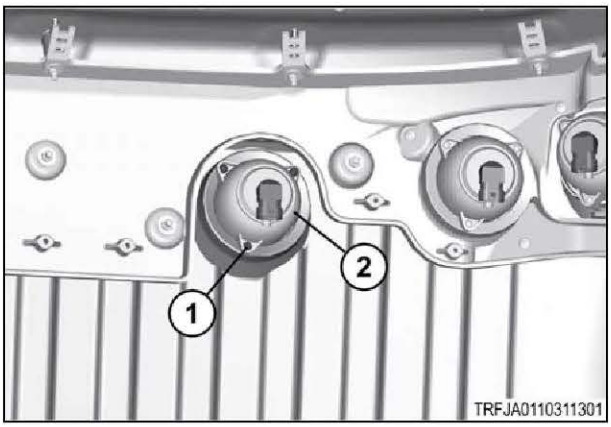

Fig. 27

8. Remove the hardware (1), the center lamp bezel (5), and the left and right lamp bezels (3).

9. Remove the center bezel support (4), and the left and right bezel supports (2).

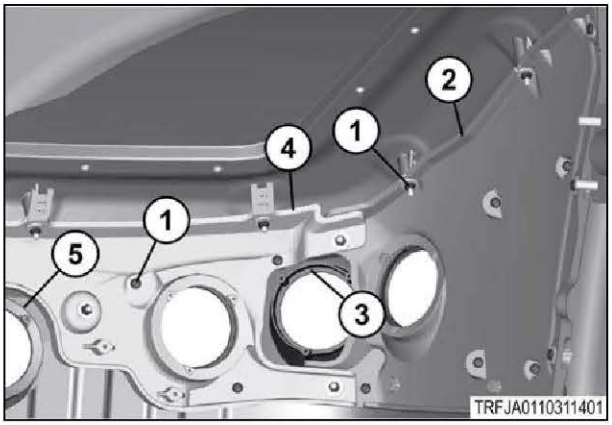

Fig. 28

10.2.6 Install the headlamps - MY16

Procedure

1. Use the hardware (1) to install the center bezel support (4), and the left and right bezel supports (2).

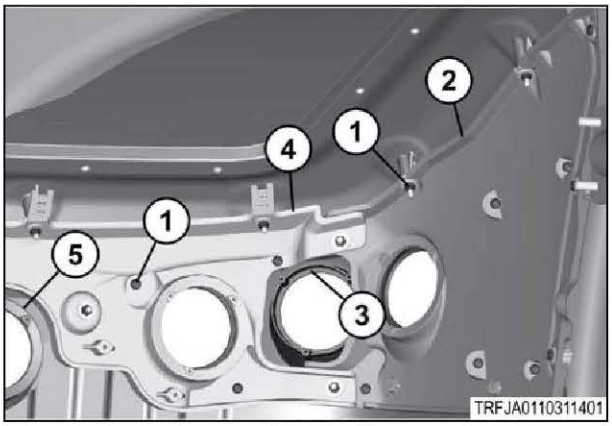

Fig. 29

2. Use the hardware (1) to install the center lamp bezel (5), and the left and right lamp bezels (3).

3. Use the hardware (1) to install the headlamps (2).

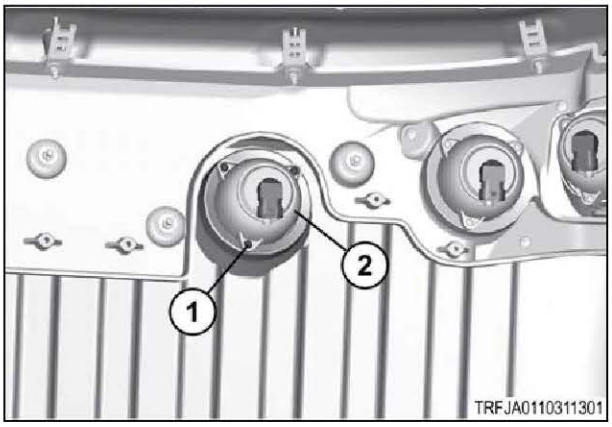

Fig. 30

4. Connect the wire harness (1) to the headlamps.
5. Disconnect the engine cover support arm, close the engine cover, and connect the side latches.
6. Install the battery disconnect switch key.
7. Turn on the battery disconnect switch key.

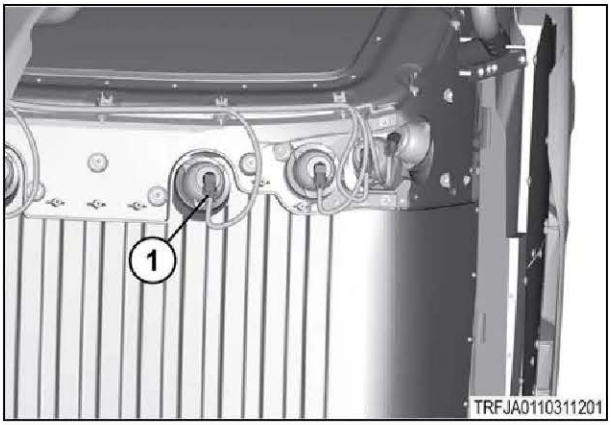

Fig. 31

10.3 Fuse panel

The main fuse panel is located on the right-hand side of cab seat near floor of the cab. To get access to the fuses, two spring loaded fasteners (1) need to be loosened.

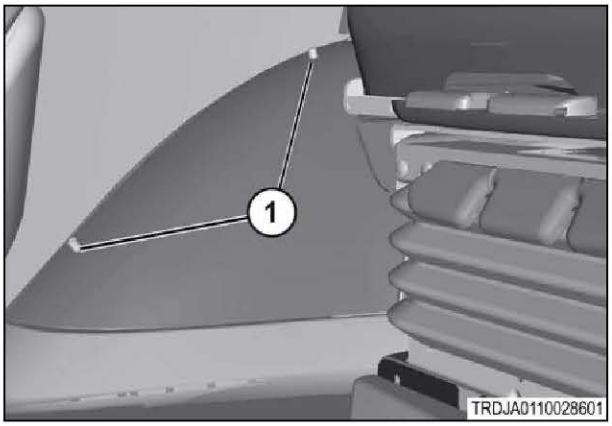

Fig. 32

10.3.1 Main fuse panel

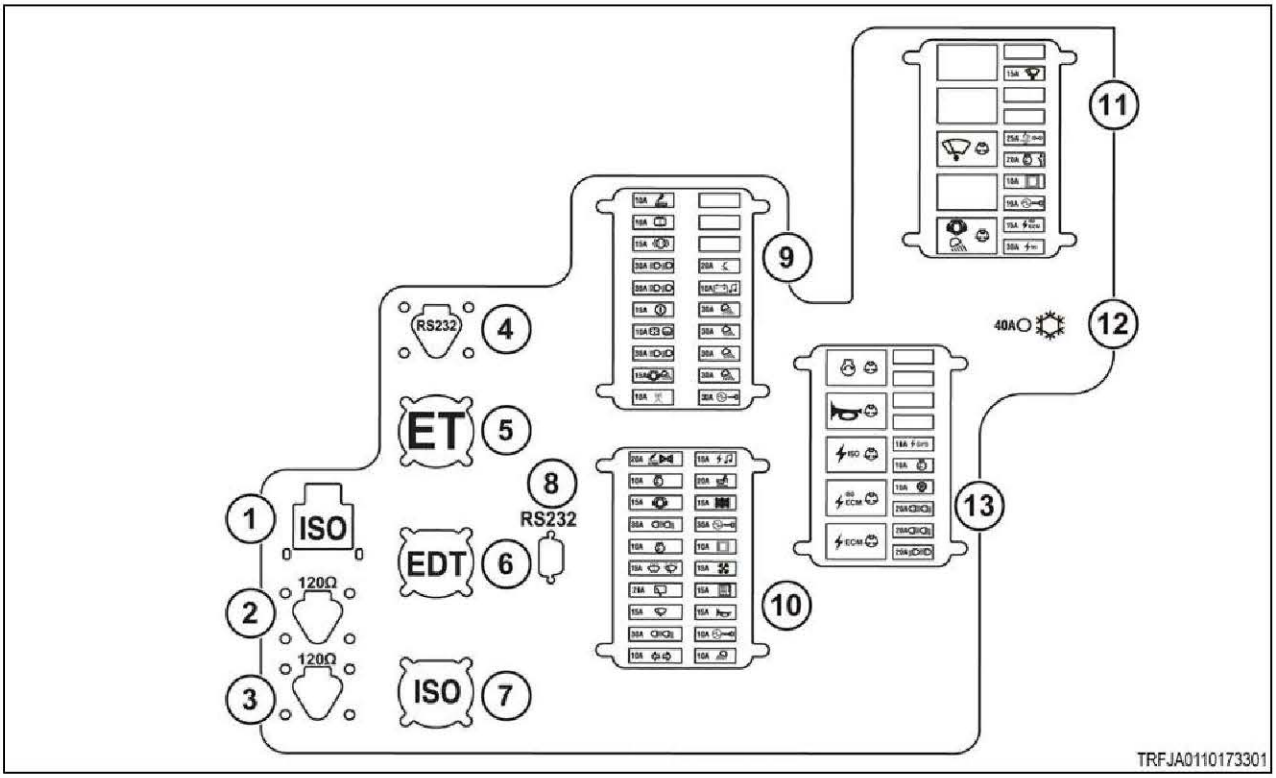

Fig. 33

The main fuse panel is located inside of the cab.

Item	Description
1	ISO - TBC (Terminating bias circuit)
2	Power train resistor 120 OHM
3	Light /Auxiliary resistor 120 OHM
4	Guidance RS232
5	ET - Electronic service connector
6	EDT - Electronic diagnostic service connector

Item	Description
7	ISO - Service connector
8	Guidance RS232
9	Fuse block 1
10	Fuse block 2
11	Fuse / Relay block 1
12	40 AMP - A/C fuse 1
13	Fuse / Relay block 2

10.3.2 Fuse block one

Fuse block one		
Item	**Rating**	**Description**
	Switched battery	
1	10 Amp	Cigar lighter
2	10 Amp	Rear washer
3	15 Amp	Brakes
4	30 Amp	Light module top
5	30 Amp	Light module top
6	15 Amp	Amplifier power
7	10 Amp	Mirror power/ heat
8	30 Amp	Light module top
9	15 Amp	Trailer lights
10	10 Amp	Telemetry
Item	**Rating**	**Description**
	Battery +	
11	Not used	
12	Not used	
13	Not used	
14	20 Amp	Pivoting step
15	10 Amp	Radio battery power
16	30 Amp	Roof light module
17	30 Amp	Roof light module

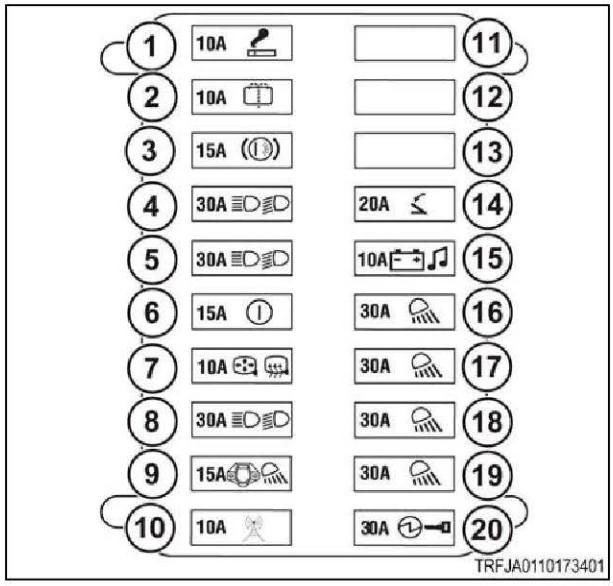

Fig. 34

Fuse block one		
18	30 Amp	Roof light module
19	30 Amp	Roof light module
20	30 Amp	Power port

10.3.3 Fuse block two

Fuse block two		
Item	**Rating**	**Description**
	Switch battery	
1	20 Amp	Implement valve / hitch valve
2	10 Amp	Inch sensor / steer sensor / rock shaft sensor
3	15 Amp	Trailer auxiliary
4	30 Amp	Bottom module
5	10 Amp	Decel sensor / air sensor / belt tension
6	15 Amp	Front washer / intermittent wiper
7	20 Amp	Rear wiper
8	15 Amp	Front wiper
9	30 Amp	Bottom module
10	10 Amp	Turn signal
Item	**Rating**	**Description**
11	15 Amp	Radio
12	20 Amp	Seat
13	15 Amp	Terminal strip
14	30 Amp	Power ports switched
15	10 Amp	Tractor management center (TMC)

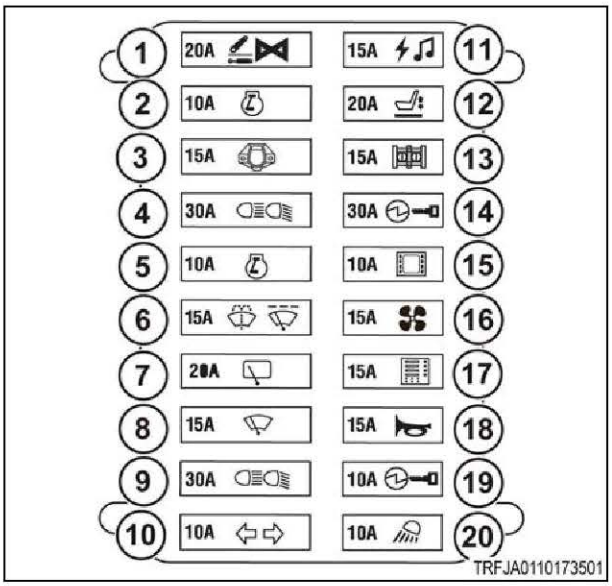

Fig. 35

Fuse block two		
16	15 Amp	Fan control / DEF quality sensor
17	15 Amp	Product link
18	15 Amp	Horn
19	10 Amp	Cell phone port / power port
20	10 Amp	Light switch

10.3.4 Fuse relay block one

Fuse / relay block one		
Item	**Relay**	**Description**
1	Not used	
2	Not used	
3	35 Amp	High wiper relay
4	Not used	
5	35 Amp	Trailer work light relay
Fuse / relay block one - battery +		
Item	**Fuse**	**Description**
6	Not used	
7	15 Amp	Front wiper (high)
8	Not used	
9	Not used	
10	25 Amp	UREA Heater / UREA pressure
11	20 Amp	Transmission ECU
12	10 Amp	Monitor (monitor bar)
13	10 Amp	Battery power
14	15 Amp	ISO ECU power
15	30 Amp	ISO power

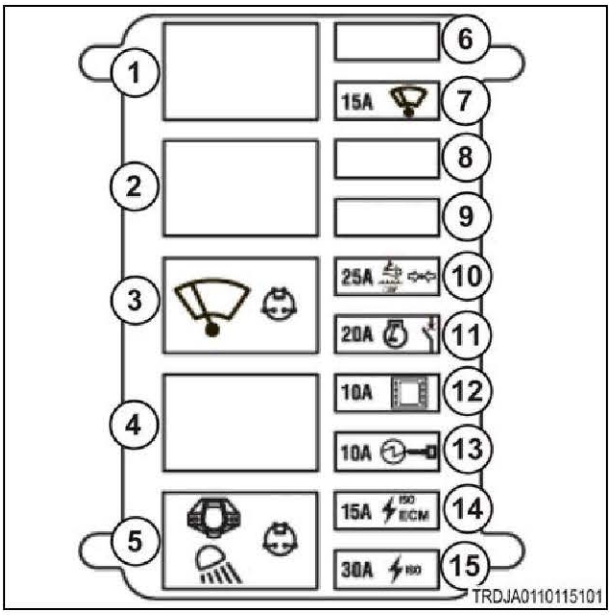

Fig. 36

10.3.5 Fuse relay block two

Fuse / relay block two		
Item	**Relay**	**Description**
1	35 Amp	Neutral start relay
2	35 Amp	Horn relay
3	35 Amp	ISO power relay
4	35 Amp	ISO ECU relay
5	35 Amp	ECU relay
Fuse / relay block two - ECU relay power		
Item	**Fuse**	**Description**
6	Not used	
7	Not used	
8	Not used	
9	Not used	
10	10 Amp	GPS
11	10 Amp	Armrest
12	10 Amp	Dash
13	20 Amp	Bottom light module
14	20 Amp	Bottom light module
15	20 Amp	Top light module

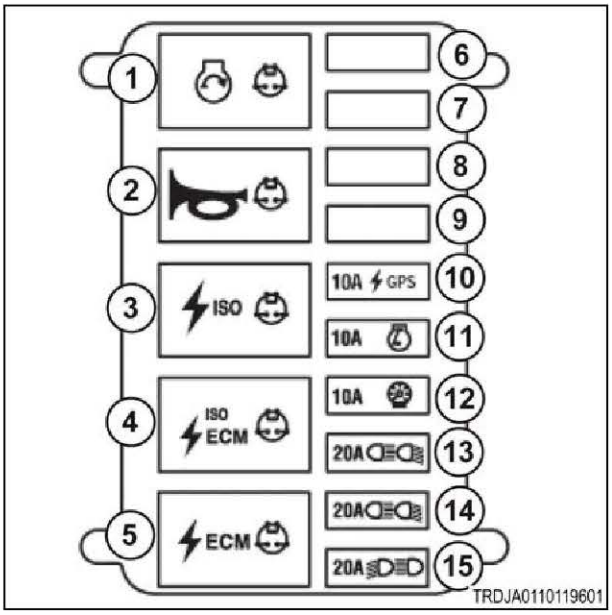

Fig. 37

10.3.6 Relay and fuse panel for chassis

NOTE: *The panel is on the right side of the machine.*

Relays	Fuses
Engine switched power	Hood LH flood lights
	Hood LH flood lights
DEF Heater	Waste gate 2
	After-run ground
Waste gate, EGR, Nox sensor	After-run ground diode
	-empty-
Hood LH flood lights	Nox sensors

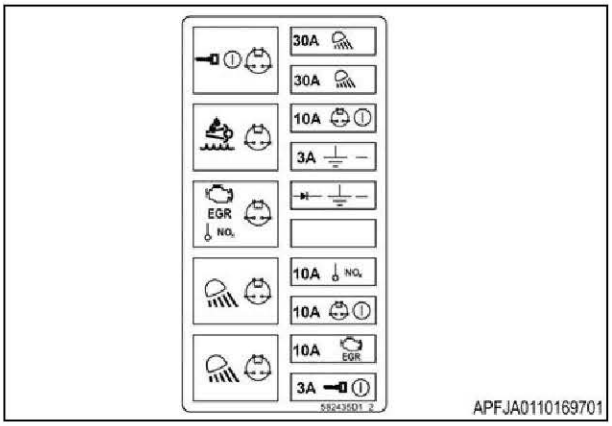

Fig. 38

Relays	Fuses
	Waste gate 1
Hood LH flood lights	EGR
	Key-switched power

10.3.7 Main fuse

The two main fuses for the cab power and the alternator are located inside the frame rail.

(1) Alternator, 300 Amps

(2) ECM, Starter relay and Auxiliary Relay, 100 Amps

(3) Cab stud, 175 Amps

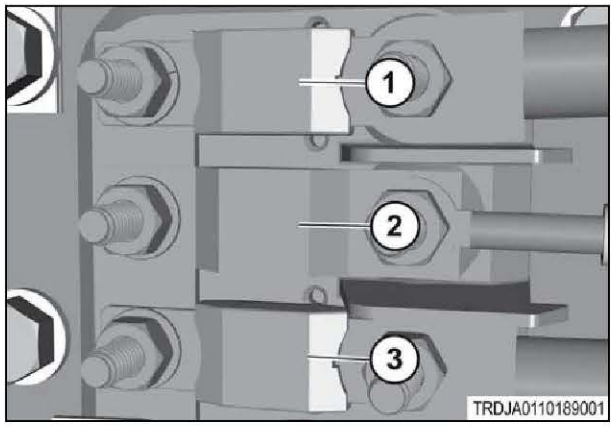

Fig. 39

10.4 Electrical system troubleshooting

Electrical system Is not operating	
Cause(s)	**Solution(s)**
The battery disconnect switch is in the off position.	Turn the battery disconnect switch to the on position.
Battery connections are loose or corroded.	Clean the connections or tighten the connections.
The batteries are sulfated.	Check the battery circuit for a minimum of 12.5 Volts. Charge the batteries or replace the batteries.

Speed of the starter is low and the engine cranks slowly	
Cause(s)	**Solution(s)**
Battery connections are loose or are corroded.	Clean the connections and tighten the connections.
The output of the batteries is low.	Check the battery circuit for a minimum of 12.5 Volts. Charge the batteries or replace the batteries.
Viscosity of the engine oil is in correct.	Use correct viscosity of engine oil for current temperature.

Starter is not operating	
Cause(s)	**Solution(s)**
The transmission control lever is in gear.	Put the transmission control into the park position.
The connections to the batteries are loose or are corroded.	Clean the connections or tighten the connections.
The battery disconnect switch is in the off position.	Turn the battery disconnect switch to the on position.
The batteries are deenergized.	Charge the batteries or replace the batteries.

Batteries will not charge	
Cause(s)	**Solution(s)**
The connections to the batteries are loose or corroded.	Clean the connections and tighten the connections.
The batteries are sulfated.	Check the battery circuit for a minimum of 12.5 Volts. Charge the batteries or replace the batteries.
The alternator belt is loose.	Check the belt tension. If the belt tension is low, check the condition of the belt and pulley. .

10.5 00 Engine module

10.5.1 Code SA 00 SPN 1761 FMI 01

DEF tank empty.

Diagnosis and solution

1. Clear the error log.
2. Restart the engine module.
3. If the fault code occurs again during the next driving cycle, check the following.
4. Make sure the DEF tank is full.
5. Check the DEF tank level sensor harness. Make sure the connections are good and the contacts are clean.
6. Replace the DEF tank level sensor. If the system is correct and the fault code is not active, the original sensor is bad.

10.5.1.1 DEF electrical schematic

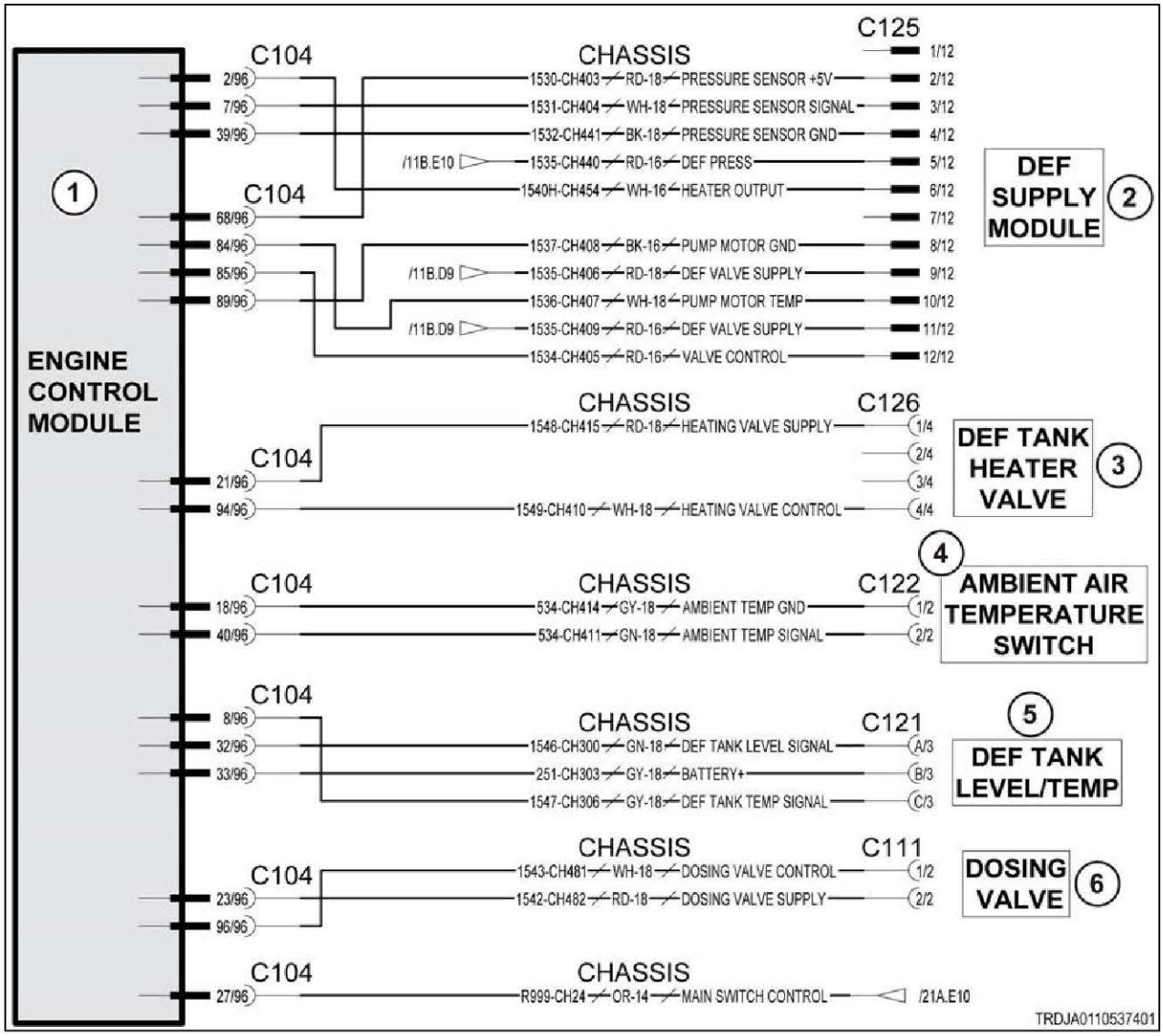

Fig. 40

Schematic legend		
Item	**Schematic term**	**Description**
1	ENGINE CONTROL MODULE	Engine module
2	DEF SUPPLY MODULE	DEF supply module
3	DEF TANK HEATER VALVE	DEF tank heater valve
4	AMBIENT AIR TEMPERATURE SWITCH	Ambient air temperature switch
5	DEF TANK LEVEL/TEMP	DEF tank level/temperature
6	DOSING VALVE	Dosing valve
--	DEF PRESS SENSOR GND	DEF pressure sensor ground
--	PUMP MOTOR GND	Pump motor ground
--	PUMP MOTOR TEMP	Pump motor temperature
--	AMBIENT TEMP GND	Ambient temperature ground

10.5.2 Code SA 00 SPN 1761 FMI 03

Measured DEF tank level sensor voltage is above normal operating range.

Diagnosis and solution

1. Clear the error log.
2. Restart the engine module.
3. If the fault code occurs again during the next driving cycle, check the following.
4. Make sure the DEF tank is full.
5. Check the DEF tank level sensor harness. Make sure the connections are good and the contacts are clean.
6. Replace the DEF tank level sensor. If the system is correct and the fault code is not active, the original sensor is bad.

10.5.2.1 DEF electrical schematic

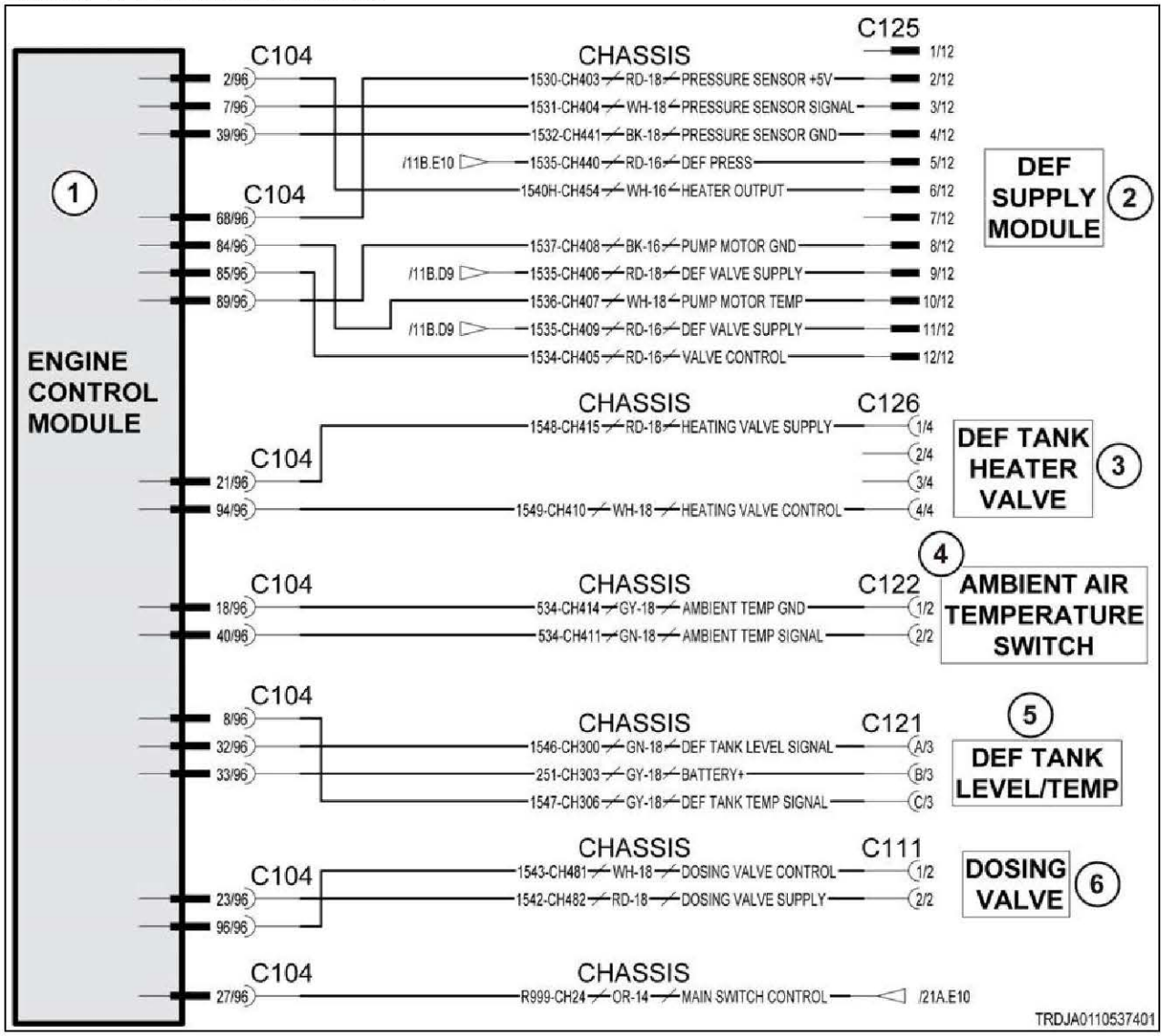

Fig. 41

Schematic legend		
Item	**Schematic term**	**Description**
1	ENGINE CONTROL MODULE	Engine module
2	DEF SUPPLY MODULE	DEF supply module
3	DEF TANK HEATER VALVE	DEF tank heater valve
4	AMBIENT AIR TEMPERATURE SWITCH	Ambient air temperature switch
5	DEF TANK LEVEL/TEMP	DEF tank level/temperature
6	DOSING VALVE	Dosing valve
--	DEF PRESS SENSOR GND	DEF pressure sensor ground
--	PUMP MOTOR GND	Pump motor ground
--	PUMP MOTOR TEMP	Pump motor temperature
--	AMBIENT TEMP GND	Ambient temperature ground

10.5.3 Code SA 00 SPN 1761 FMI 04

Measured DEF tank level sensor voltage is below normal operating range.

Diagnosis and solution

1. Clear the error log.
2. Restart the engine module.
3. If the fault code shows again during the next driving cycle, check the following.
4. Check the DEF tank level sensor harness. Make sure the connections are good and the contacts are clean.
5. Replace the DEF tank level sensor. If the system is correct and the fault code is not active, the original sensor is bad.

10.5.3.1 DEF electrical schematic

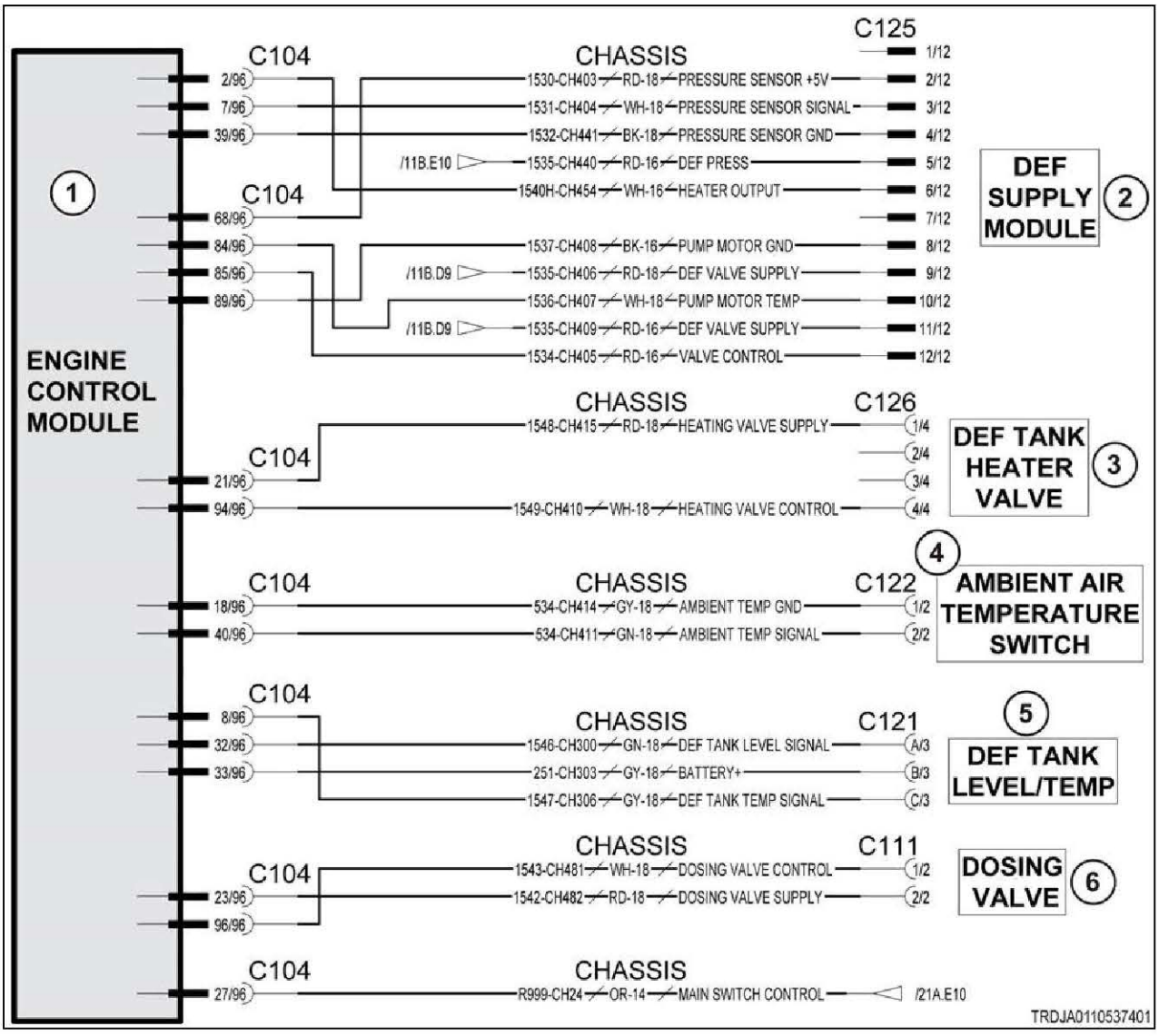

Fig. 42

Schematic legend		
Item	Schematic term	Description
1	ENGINE CONTROL MODULE	Engine module
2	DEF SUPPLY MODULE	DEF supply module
3	DEF TANK HEATER VALVE	DEF tank heater valve
4	AMBIENT AIR TEMPERATURE SWITCH	Ambient air temperature switch
5	DEF TANK LEVEL/TEMP	DEF tank level/temperature
6	DOSING VALVE	Dosing valve
--	DEF PRESS SENSOR GND	DEF pressure sensor ground
--	PUMP MOTOR GND	Pump motor ground
--	PUMP MOTOR TEMP	Pump motor temperature
--	AMBIENT TEMP GND	Ambient temperature ground

10.5.4 Code SA 00 SPN 1761 FMI 18

DEF tank low level.

Diagnosis and solution

1. Clear the error log.
2. Restart the engine module.
3. If the fault code shows again during the next driving cycle, check the following.
4. Check the DEF tank level sensor harness. Make sure the connections are good and the contacts are clean.
5. Replace the DEF tank level sensor. If the system is correct and the fault code is not active, the original sensor is bad.

10.5.4.1 DEF electrical schematic

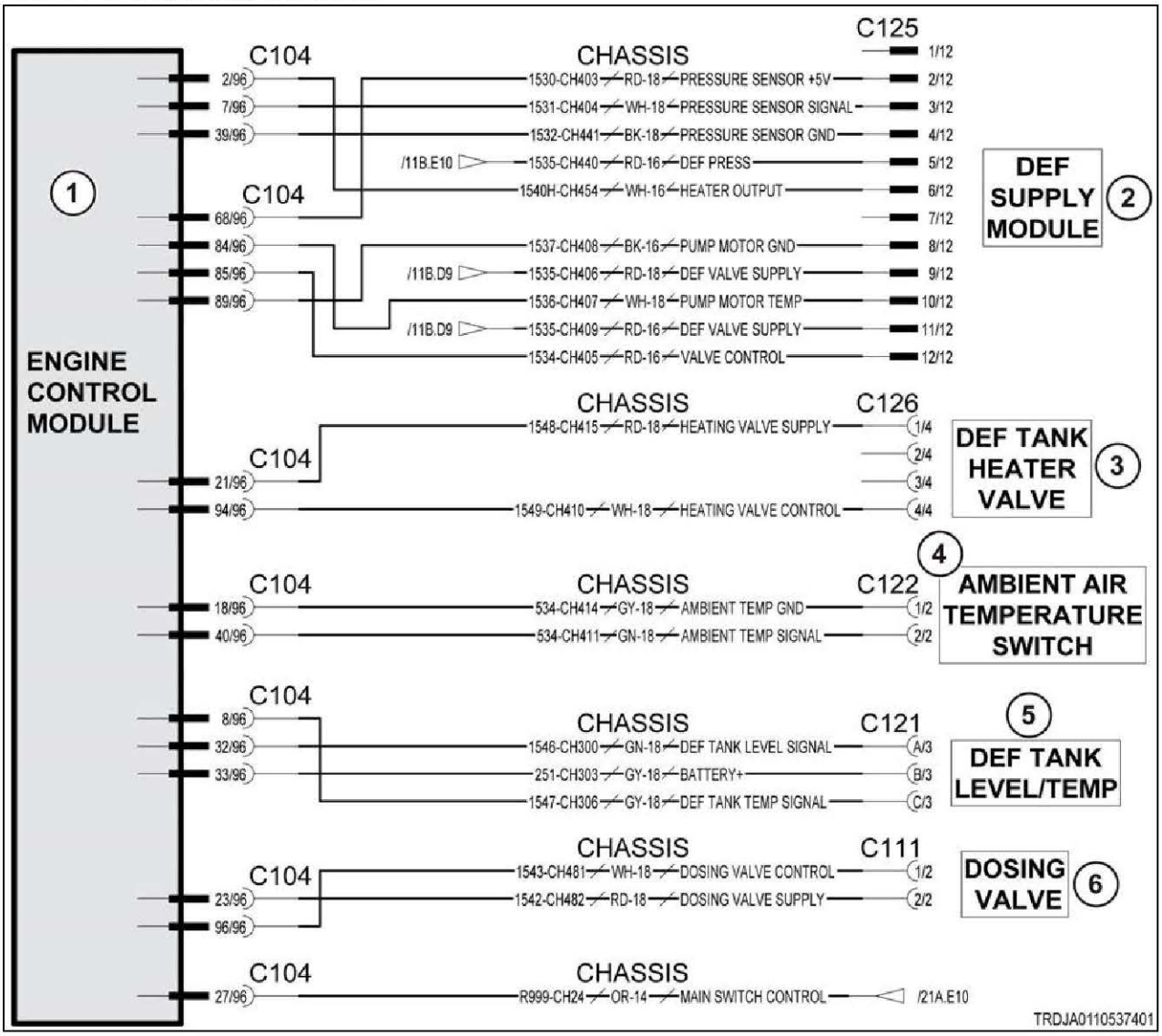

Fig. 43

Schematic legend		
Item	**Schematic term**	**Description**
1	ENGINE CONTROL MODULE	Engine module
2	DEF SUPPLY MODULE	DEF supply module
3	DEF TANK HEATER VALVE	DEF tank heater valve
4	AMBIENT AIR TEMPERATURE SWITCH	Ambient air temperature switch
5	DEF TANK LEVEL/TEMP	DEF tank level/temperature
6	DOSING VALVE	Dosing valve
--	DEF PRESS SENSOR GND	DEF pressure sensor ground
--	PUMP MOTOR GND	Pump motor ground
--	PUMP MOTOR TEMP	Pump motor temperature
--	AMBIENT TEMP GND	Ambient temperature ground

10.5.5 Code SA 00 SPN 3031 FMI 03

Measured DEF tank temperature sensor signal is above normal operating range.

Diagnosis and solution

1. Clear the error log.
2. Restart the engine module.
3. If the fault code occurs again during the next driving cycle, check the following.
4. Check the DEF tank temperature sensor harness. Make sure the connections are good and the contacts are clean.
5. Replace the DEF tank temperature sensor. If the system is correct and the fault code is not active, the original sensor is bad.

10.5.5.1 DEF electrical schematic

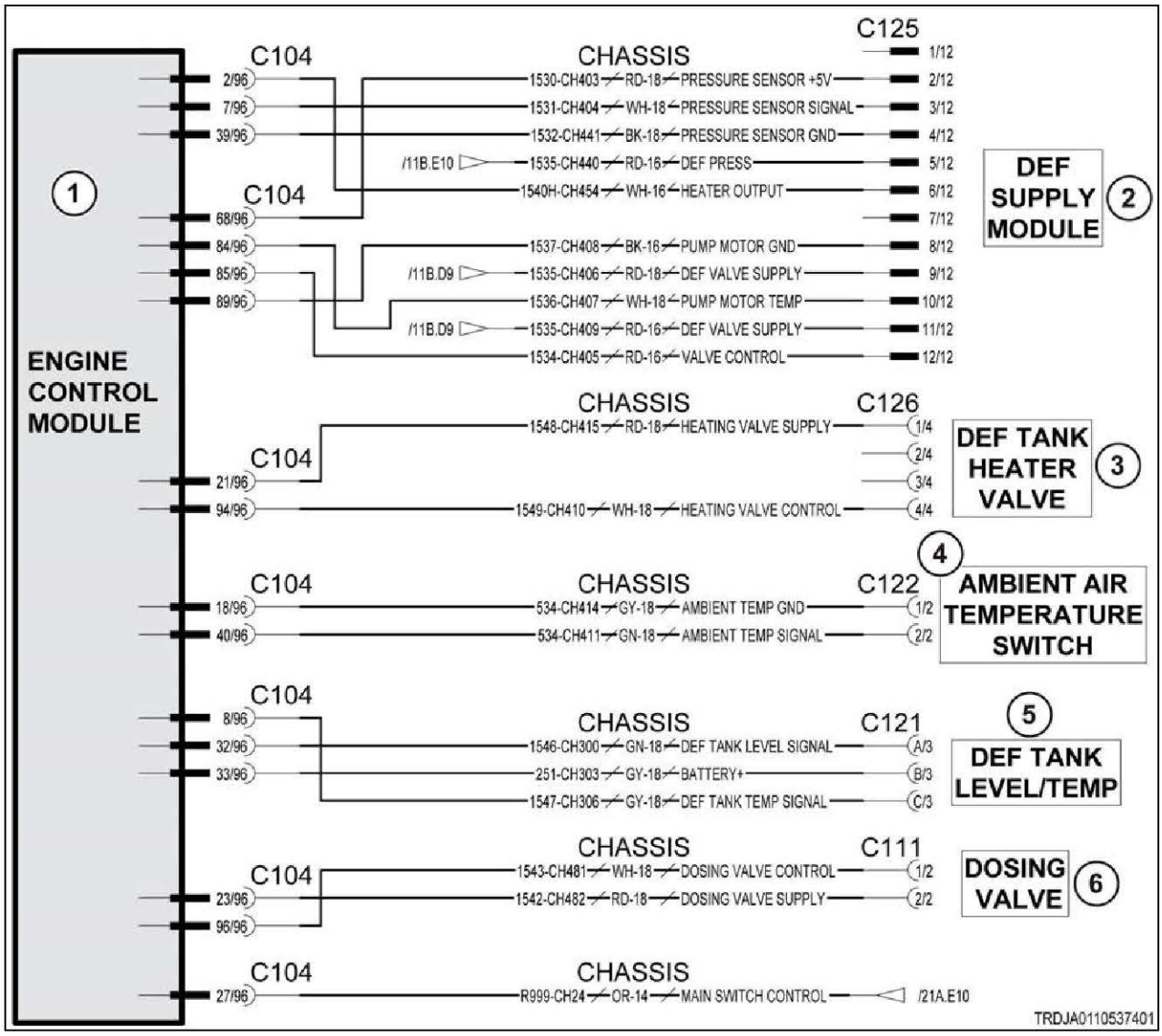

Fig. 44

Schematic legend		
Item	**Schematic term**	**Description**
1	ENGINE CONTROL MODULE	Engine module
2	DEF SUPPLY MODULE	DEF supply module
3	DEF TANK HEATER VALVE	DEF tank heater valve
4	AMBIENT AIR TEMPERATURE SWITCH	Ambient air temperature switch
5	DEF TANK LEVEL/TEMP	DEF tank level/temperature
6	DOSING VALVE	Dosing valve
--	DEF PRESS SENSOR GND	DEF pressure sensor ground
--	PUMP MOTOR GND	Pump motor ground
--	PUMP MOTOR TEMP	Pump motor temperature
--	AMBIENT TEMP GND	Ambient temperature ground

10.5.6 Code SA 00 SPN 3031 FMI 04

Measured DEF tank temperature sensor signal is below normal operating range.

Diagnosis and solution

1. Clear the error log.
2. Restart the engine module.
3. If the fault code occurs again during the next driving cycle, check the following.
4. Check the DEF tank temperature sensor harness. Make sure the connections are good and the contacts are clean.
5. Replace the DEF tank temperature sensor. If the system is correct and the fault code is not active, the original sensor is bad.

10.5.6.1 DEF electrical schematic

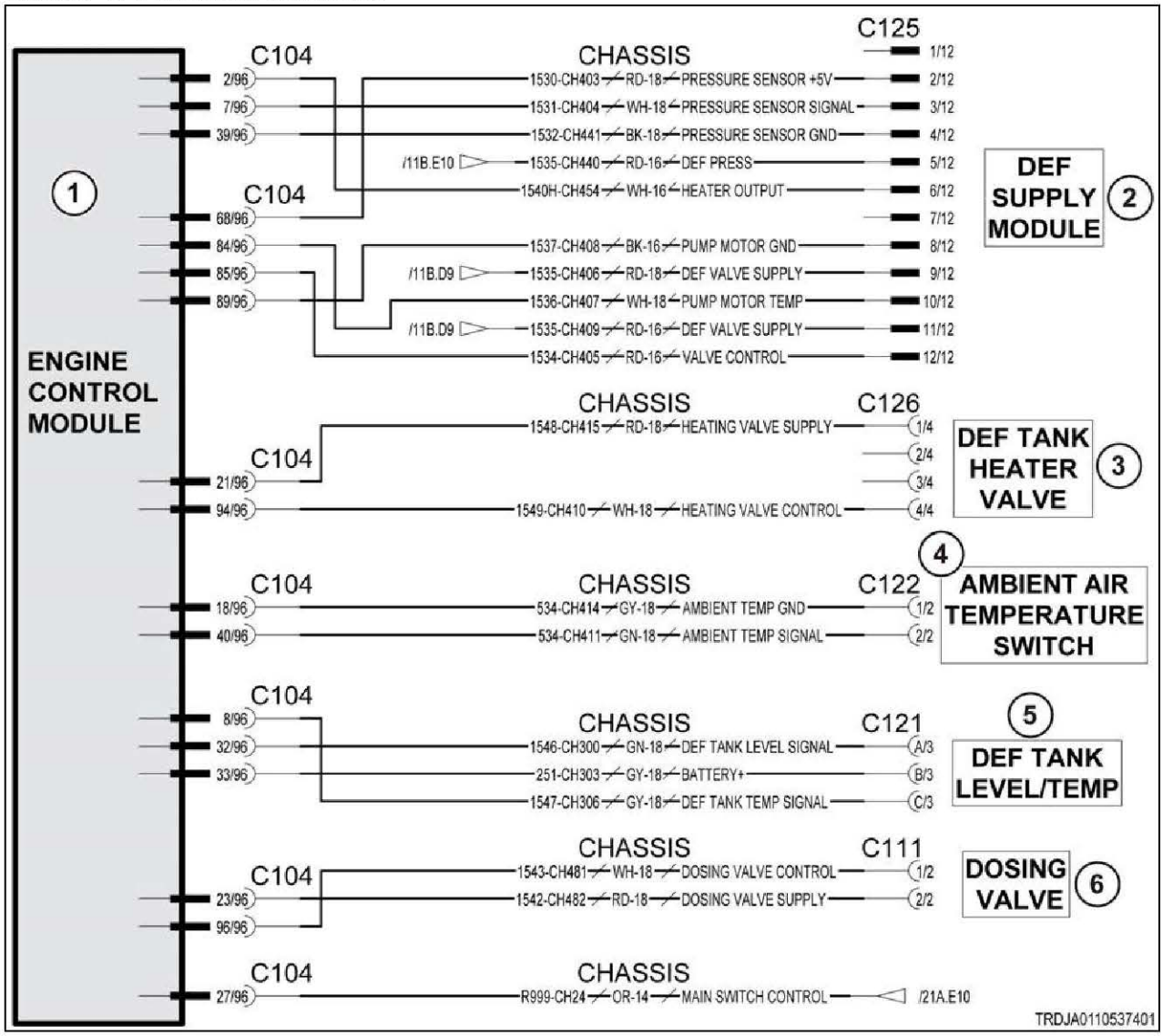

Fig. 45

Schematic legend		
Item	**Schematic term**	**Description**
1	ENGINE CONTROL MODULE	Engine module
2	DEF SUPPLY MODULE	DEF supply module
3	DEF TANK HEATER VALVE	DEF tank heater valve
4	AMBIENT AIR TEMPERATURE SWITCH	Ambient air temperature switch
5	DEF TANK LEVEL/TEMP	DEF tank level/temperature
6	DOSING VALVE	Dosing valve
--	DEF PRESS SENSOR GND	DEF pressure sensor ground
--	PUMP MOTOR GND	Pump motor ground
--	PUMP MOTOR TEMP	Pump motor temperature
--	AMBIENT TEMP GND	Ambient temperature ground

10.5.7 Code SA 00 SPN 3031 FMI 10

The DEF tank temperature does not change during the heating cycle.

Diagnosis and solution

1. Clear the error log.
2. Restart the engine module.
3. If the fault code shows again during the next driving cycle, check the following.
4. Check the coolant supply of the tank heating element.
5. Install a new DEF tank heating valve to see if the original is bad.
6. Check the DEF tank temperature sensor harness. Make sure the connections are good and the contacts are clean.
7. Replace the DEF tank temperature sensor. If the system is correct and the fault code is not active, the original sensor is bad.

10.5.7.1 DEF electrical schematic

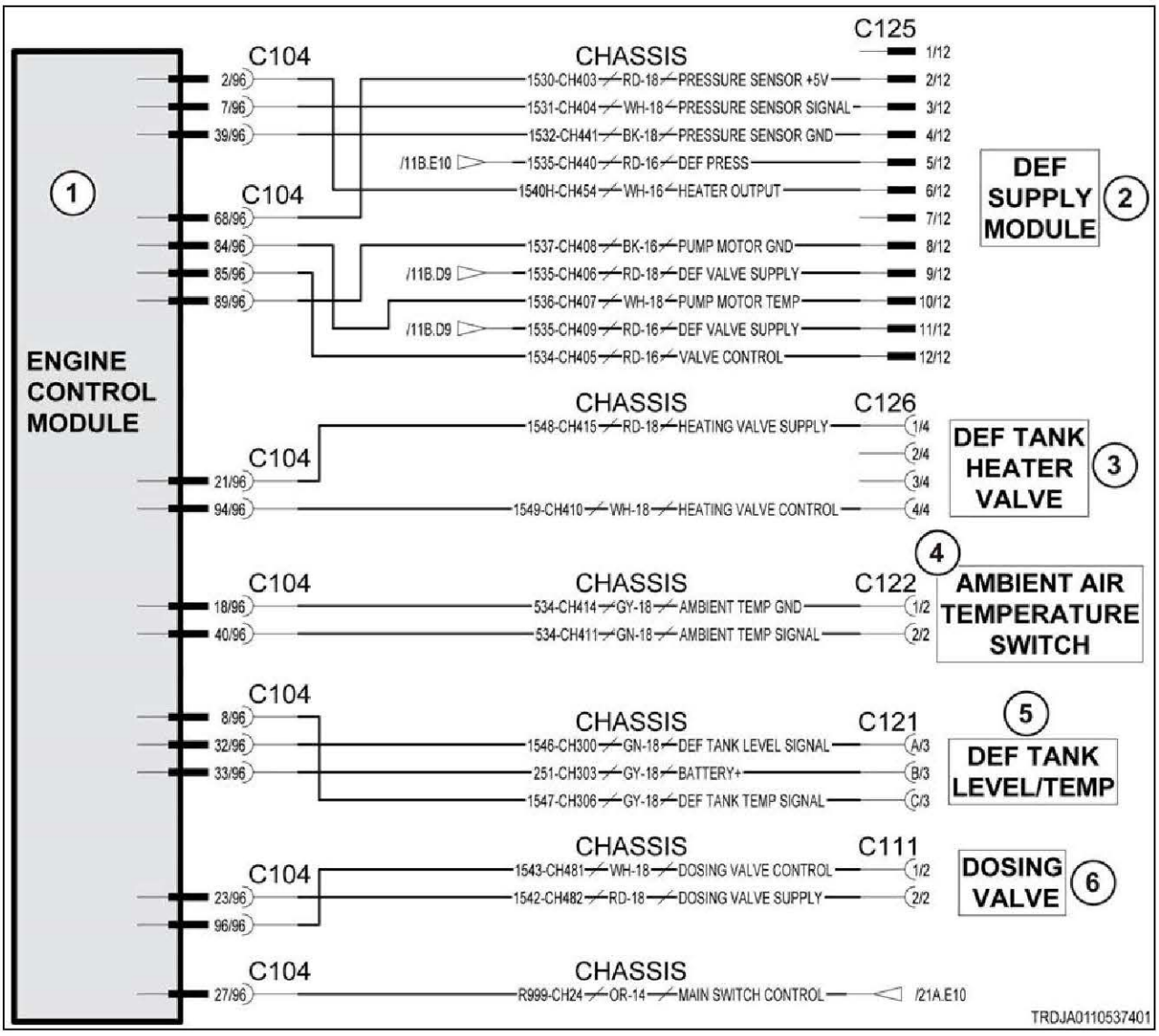

Fig. 46

Schematic legend		
Item	**Schematic term**	**Description**
1	ENGINE CONTROL MODULE	Engine module
2	DEF SUPPLY MODULE	DEF supply module
3	DEF TANK HEATER VALVE	DEF tank heater valve
4	AMBIENT AIR TEMPERATURE SWITCH	Ambient air temperature switch
5	DEF TANK LEVEL/TEMP	DEF tank level/temperature
6	DOSING VALVE	Dosing valve
--	DEF PRESS SENSOR GND	DEF pressure sensor ground
--	PUMP MOTOR GND	Pump motor ground
--	PUMP MOTOR TEMP	Pump motor temperature
--	AMBIENT TEMP GND	Ambient temperature ground

10.5.8 Code SA 00 SPN 3031 FMI 14

Maximum defrost time of DEF tank has been exceeded.

Diagnosis and solution

1. Clear the error log.
2. Restart the engine module.
3. If the fault code shows again during the next driving cycle, check the following.
4. Check the coolant supply of the tank heating element.
5. Install a new DEF tank heating valve to see if the original is bad.
6. Check the DEF tank temperature sensor harness. Make sure the connections are good and the contacts are clean.
7. Replace the DEF tank temperature sensor. If the system is correct and the fault code is not active, the original sensor is bad.

10.5.8.1 DEF electrical schematic

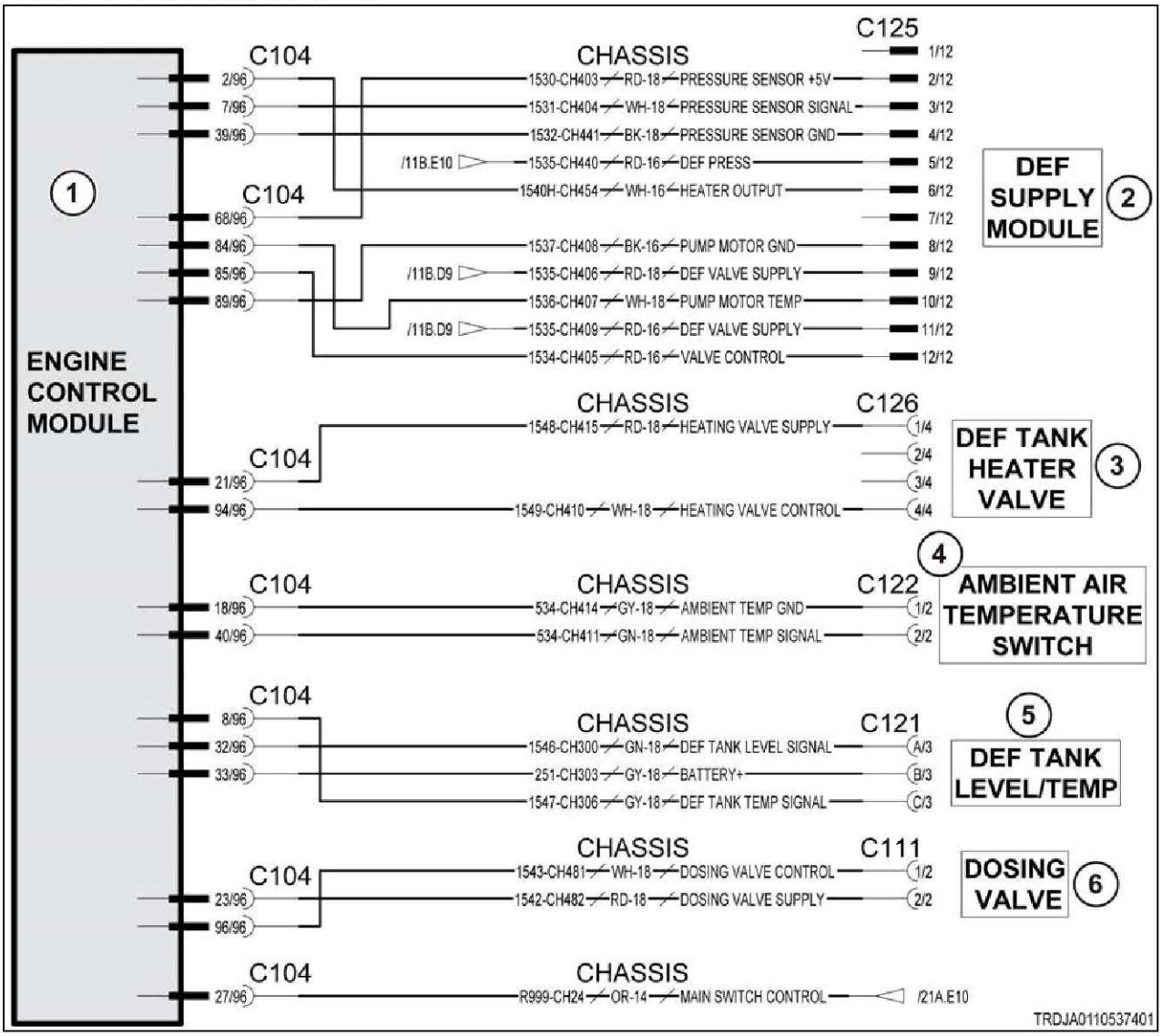

Fig. 47

Schematic legend		
Item	**Schematic term**	**Description**
1	ENGINE CONTROL MODULE	Engine module
2	DEF SUPPLY MODULE	DEF supply module
3	DEF TANK HEATER VALVE	DEF tank heater valve
4	AMBIENT AIR TEMPERATURE SWITCH	Ambient air temperature switch
5	DEF TANK LEVEL/TEMP	DEF tank level/temperature
6	DOSING VALVE	Dosing valve
--	DEF PRESS SENSOR GND	DEF pressure sensor ground
--	PUMP MOTOR GND	Pump motor ground
--	PUMP MOTOR TEMP	Pump motor temperature
--	AMBIENT TEMP GND	Ambient temperature ground

10.5.9 Code SA 00 SPN 3031 FMI 16

Measured DEF tank temperature is above normal.

Diagnosis and solution

1. Clear the error log.
2. Restart the engine module.
3. If the fault code shows again during the next driving cycle, check the following.
4. Check the coolant supply of the tank heating element.
5. Install a new DEF tank heating valve to see if the original is bad.
6. Check the DEF tank temperature sensor harness. Make sure the connections are good and the contacts are clean.
7. Replace the DEF tank temperature sensor. If the system is correct and the fault code is not active, the original sensor is bad.

10.5.9.1 DEF electrical schematic

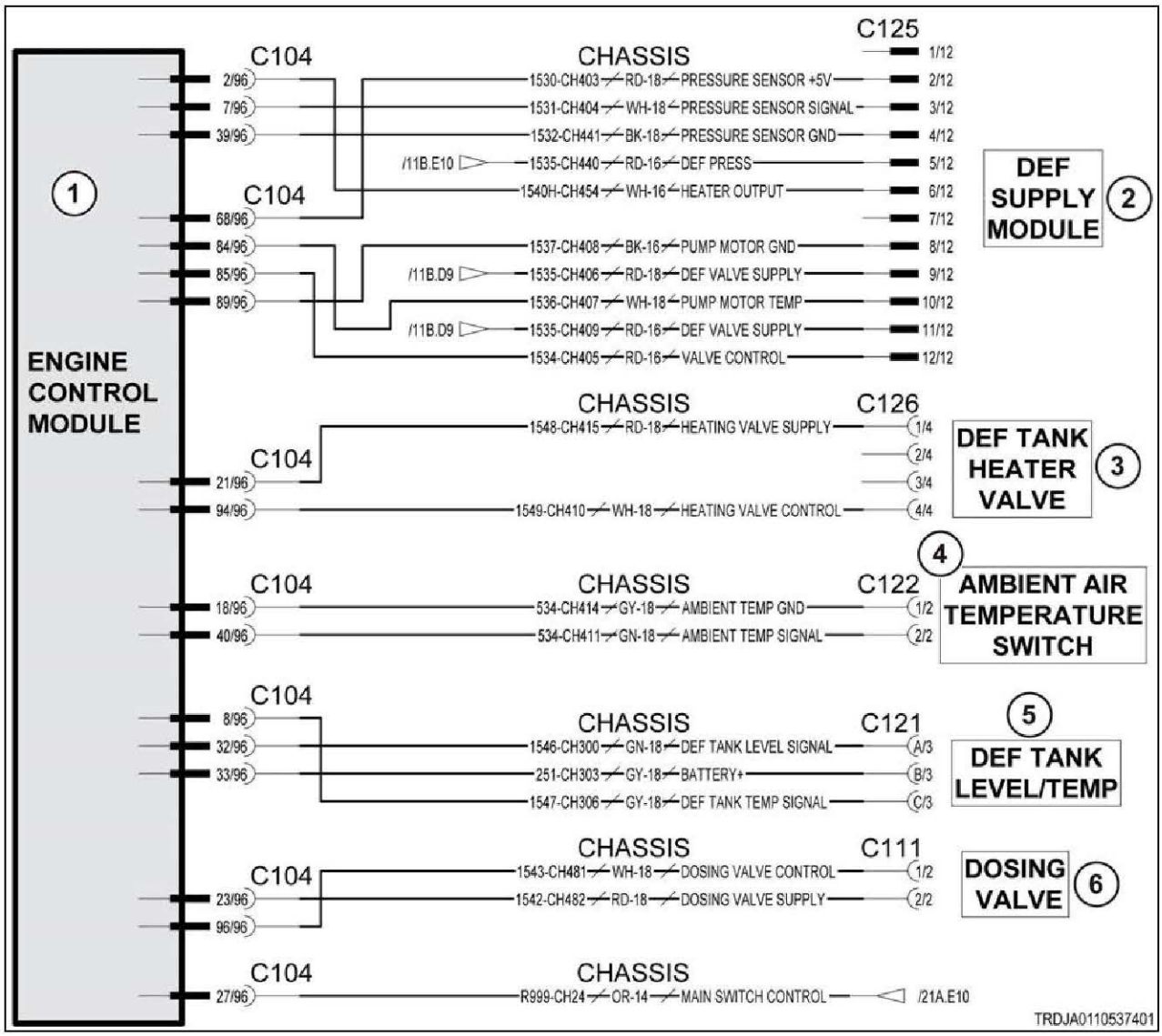

Fig. 48

Schematic legend		
Item	**Schematic term**	**Description**
1	ENGINE CONTROL MODULE	Engine module
2	DEF SUPPLY MODULE	DEF supply module
3	DEF TANK HEATER VALVE	DEF tank heater valve
4	AMBIENT AIR TEMPERATURE SWITCH	Ambient air temperature switch
5	DEF TANK LEVEL/TEMP	DEF tank level/temperature
6	DOSING VALVE	Dosing valve
--	DEF PRESS SENSOR GND	DEF pressure sensor ground
--	PUMP MOTOR GND	Pump motor ground
--	PUMP MOTOR TEMP	Pump motor temperature
--	AMBIENT TEMP GND	Ambient temperature ground

10.5.10 Code SA 00 SPN 3361 FMI 03

Short circuit to high source on DEF dosing valve low side.

Diagnosis and solution

1. Clear the error log.
2. Restart the engine module.
3. If the fault code shows again during the next driving cycle, check the following.
4. Check the DEF dosing valve harness. Make sure the connections are good and the contacts are clean.
5. Replace the DEF dosing valve. If the system is correct and the fault is not active, the original DEF dosing valve is bad.

10.5.10.1 DEF electrical schematic

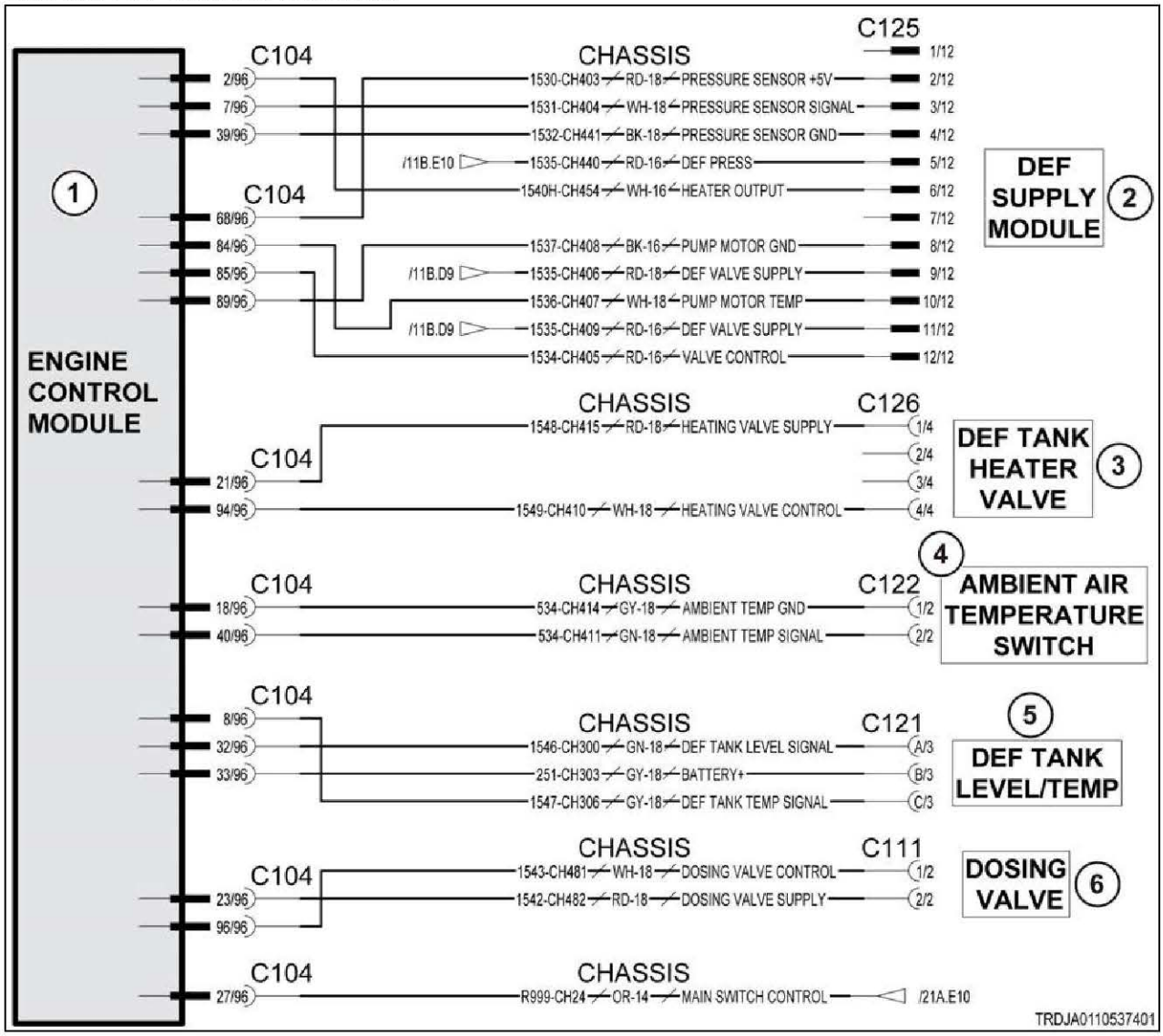

Fig. 49

Schematic legend		
Item	**Schematic term**	**Description**
1	ENGINE CONTROL MODULE	Engine module
2	DEF SUPPLY MODULE	DEF supply module
3	DEF TANK HEATER VALVE	DEF tank heater valve
4	AMBIENT AIR TEMPERATURE SWITCH	Ambient air temperature switch
5	DEF TANK LEVEL/TEMP	DEF tank level/temperature
6	DOSING VALVE	Dosing valve
--	DEF PRESS SENSOR GND	DEF pressure sensor ground
--	PUMP MOTOR GND	Pump motor ground
--	PUMP MOTOR TEMP	Pump motor temperature
--	AMBIENT TEMP GND	Ambient temperature ground

10.5.11 Code SA 00 SPN 3361 FMI 04

Short circuit on DEF dosing valve high side.

Diagnosis and solution

1. Clear the error log.
2. Restart the engine module.
3. If the fault code shows again during the next driving cycle, check the following.
4. Check the DEF dosing valve harness. Make sure the connections are good and the contacts are clean.
5. Replace the DEF dosing valve. If the system is correct and the fault is not active, the original DEF dosing valve is bad.

10.5.11.1 DEF electrical schematic

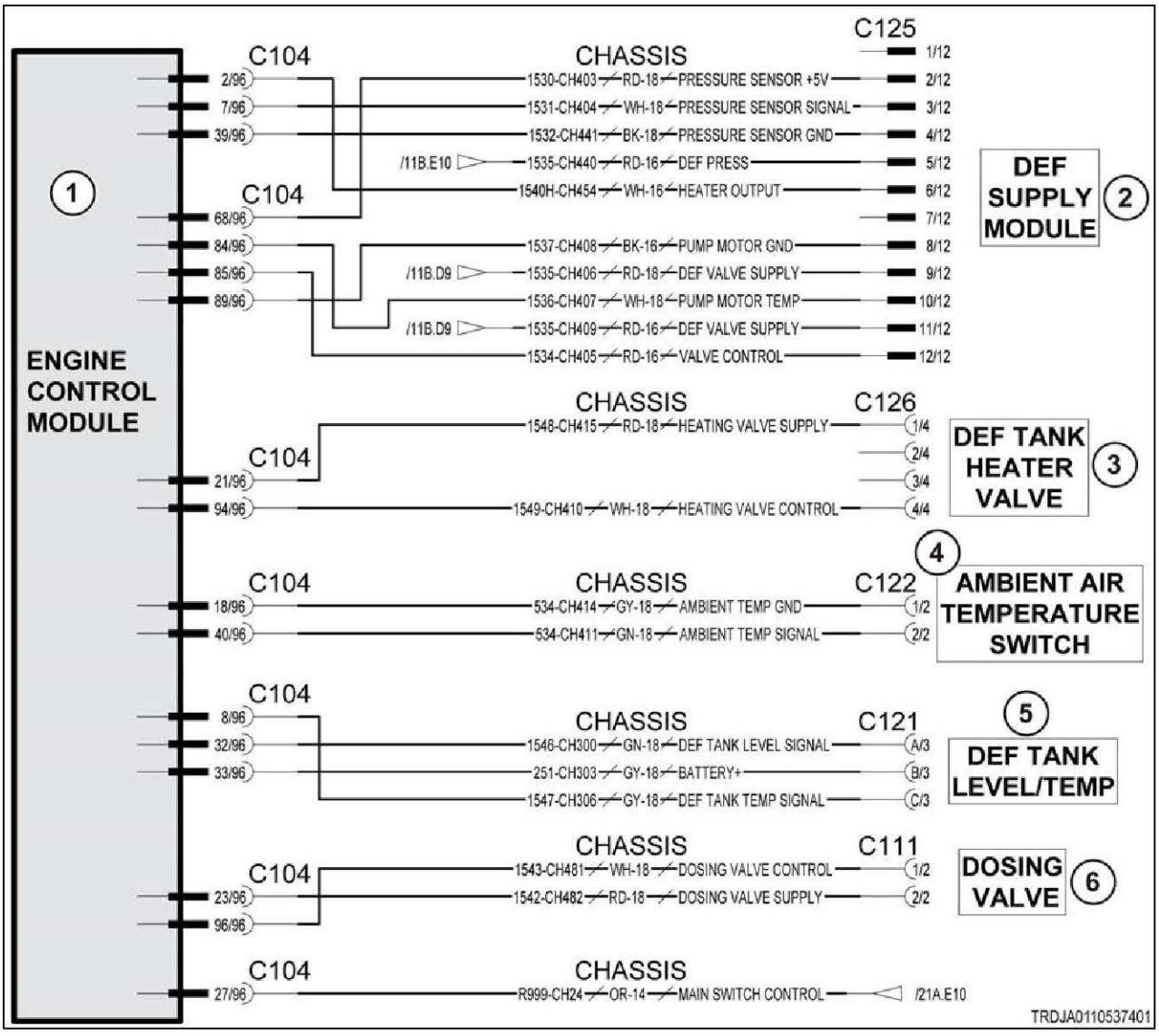

Fig. 50

Schematic legend		
Item	Schematic term	Description
1	ENGINE CONTROL MODULE	Engine module
2	DEF SUPPLY MODULE	DEF supply module
3	DEF TANK HEATER VALVE	DEF tank heater valve
4	AMBIENT AIR TEMPERATURE SWITCH	Ambient air temperature switch
5	DEF TANK LEVEL/TEMP	DEF tank level/temperature
6	DOSING VALVE	Dosing valve
--	DEF PRESS SENSOR GND	DEF pressure sensor ground
--	PUMP MOTOR GND	Pump motor ground
--	PUMP MOTOR TEMP	Pump motor temperature
--	AMBIENT TEMP GND	Ambient temperature ground

10.5.12 Code SA 00 SPN 3361 FMI 05

Short circuit to high source or open load on DEF dosing valve high side.

Diagnosis and solution

1. Clear the error log.
2. Restart the engine module.
3. If the fault code shows again during the next driving cycle, check the following.
4. Check the DEF dosing valve harness. Make sure the connections are good and the contacts are clean.
5. Replace the DEF dosing valve. If the system is correct and the fault is not active, the original DEF dosing valve is bad.

10.5.12.1 DEF electrical schematic

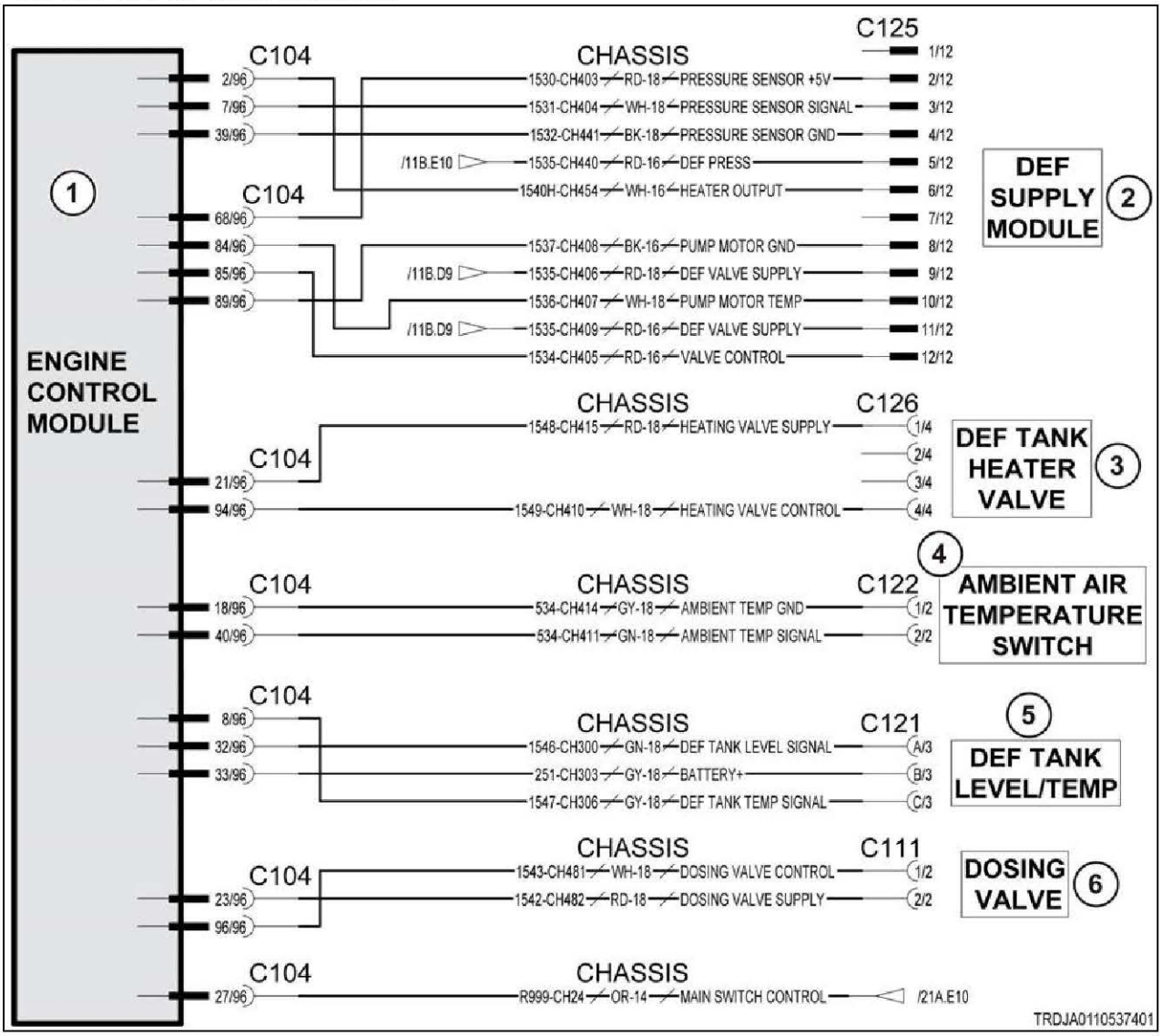

Fig. 51

Schematic legend		
Item	**Schematic term**	**Description**
1	ENGINE CONTROL MODULE	Engine module
2	DEF SUPPLY MODULE	DEF supply module
3	DEF TANK HEATER VALVE	DEF tank heater valve
4	AMBIENT AIR TEMPERATURE SWITCH	Ambient air temperature switch
5	DEF TANK LEVEL/TEMP	DEF tank level/temperature
6	DOSING VALVE	Dosing valve
--	DEF PRESS SENSOR GND	DEF pressure sensor ground
--	PUMP MOTOR GND	Pump motor ground
--	PUMP MOTOR TEMP	Pump motor temperature
--	AMBIENT TEMP GND	Ambient temperature ground

10.5.13 Code SA 00 SPN 3361 FMI 06

Short circuit to ground or open load on DEF dosing valve low side.

Diagnosis and solution

1. Clear the error log.
2. Restart the engine module.
3. If the fault code shows again during the next driving cycle, check the following.
4. Check the DEF dosing valve harness. Make sure the connections are good and the contacts are clean.
5. Replace the DEF dosing valve. If the system is correct and the fault is not active, the original DEF dosing valve is bad.

10.5.13.1 DEF electrical schematic

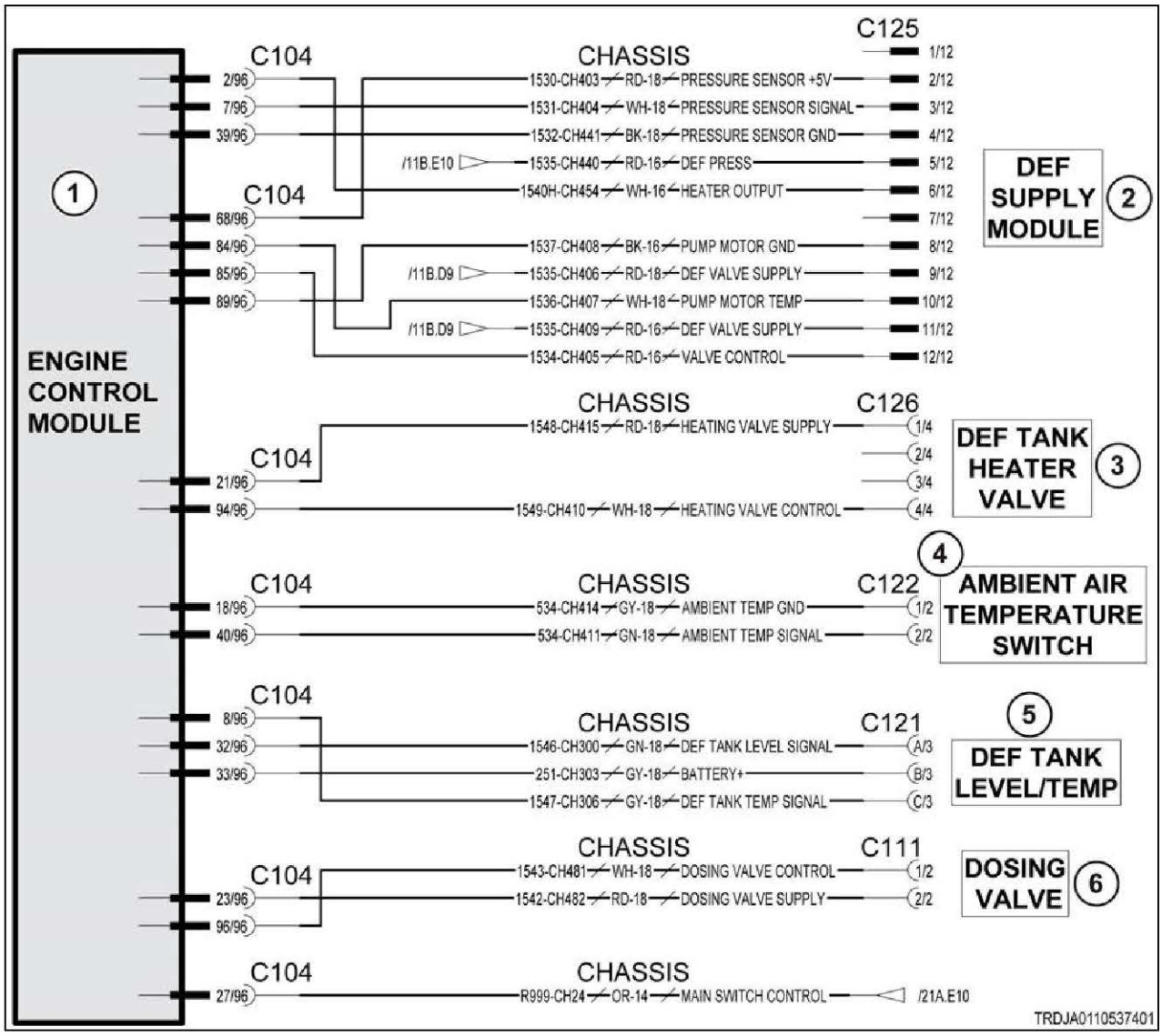

Fig. 52

Schematic legend		
Item	**Schematic term**	**Description**
1	ENGINE CONTROL MODULE	Engine module
2	DEF SUPPLY MODULE	DEF supply module
3	DEF TANK HEATER VALVE	DEF tank heater valve
4	AMBIENT AIR TEMPERATURE SWITCH	Ambient air temperature switch
5	DEF TANK LEVEL/TEMP	DEF tank level/temperature
6	DOSING VALVE	Dosing valve
--	DEF PRESS SENSOR GND	DEF pressure sensor ground
--	PUMP MOTOR GND	Pump motor ground
--	PUMP MOTOR TEMP	Pump motor temperature
--	AMBIENT TEMP GND	Ambient temperature ground

10.5.14 Code SA 00 SPN 3361 FMI 11

Exhaust temperature is too high in the DEF dosing valve and overheat protection is active.

Diagnosis and solution

1. Clear the error log.
2. Restart the engine module.
3. If the fault code shows again during the next driving cycle, check the following.
4. Fill the DEF tank with the correct fluid.
5. Check the outlet exhaust gas temperature sensor assembly. Make sure the sensor assembly is correct.
6. Check the outlet exhaust gas temperature sensor harness. Make sure the connections are good and the contacts are clean.
7. Replace the outlet exhaust gas temperature sensor. If the system is correct and the fault is not active, the original exhaust gas temperature sensor is bad.

10.5.14.1 DEF electrical schematic

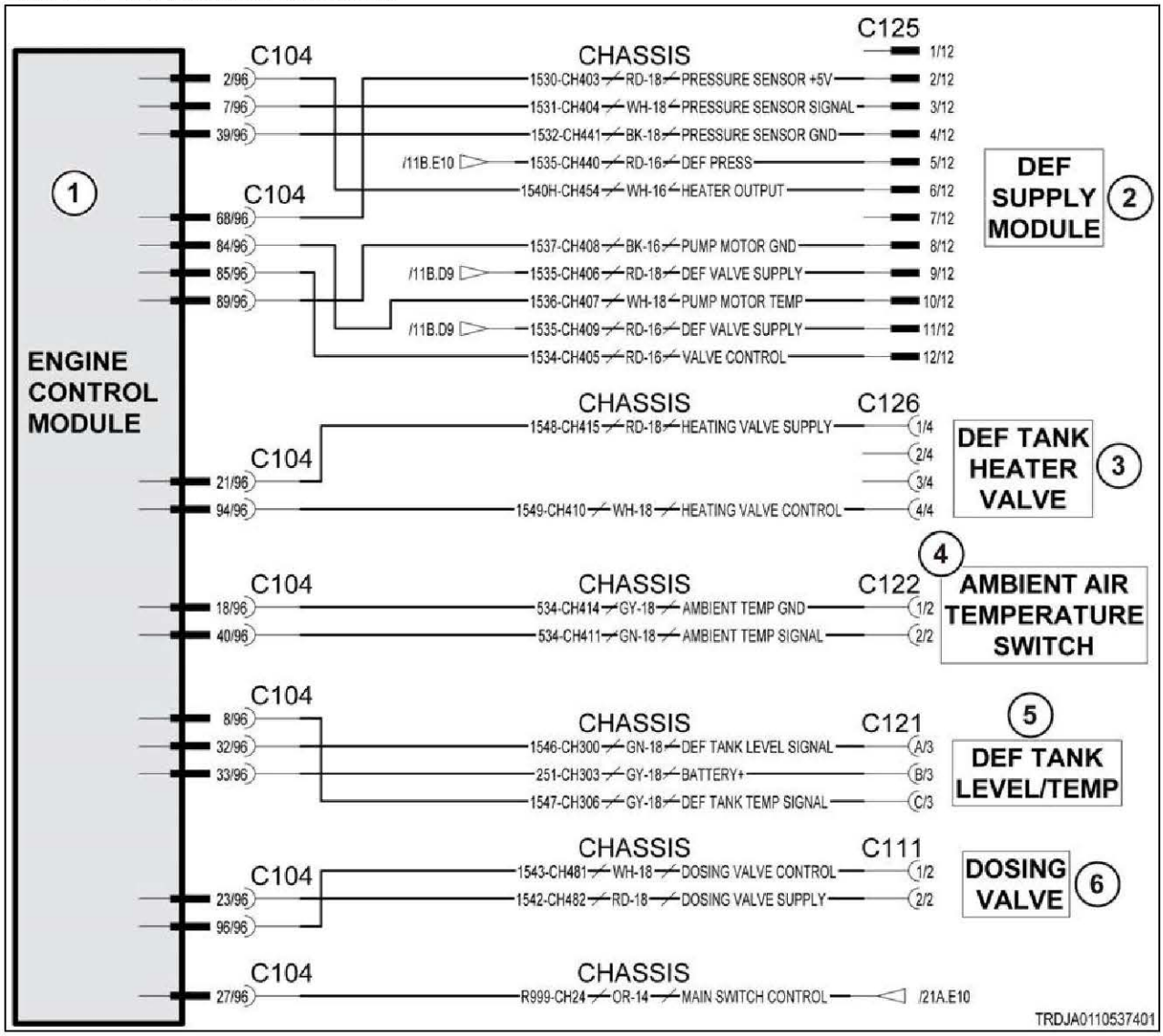

Fig. 53

Schematic legend		
Item	**Schematic term**	**Description**
1	ENGINE CONTROL MODULE	Engine module
2	DEF SUPPLY MODULE	DEF supply module
3	DEF TANK HEATER VALVE	DEF tank heater valve
4	AMBIENT AIR TEMPERATURE SWITCH	Ambient air temperature switch
5	DEF TANK LEVEL/TEMP	DEF tank level/temperature
6	DOSING VALVE	Dosing valve
--	DEF PRESS SENSOR GND	DEF pressure sensor ground
--	PUMP MOTOR GND	Pump motor ground
--	PUMP MOTOR TEMP	Pump motor temperature
--	AMBIENT TEMP GND	Ambient temperature ground

10.5.15 Code SA 00 SPN 3361 FMI 14

Abnormal behavior on DEF dosing valve current.

Diagnosis and solution

1. Clear the error log.
2. Restart the engine module.
3. If the fault code shows again during the next driving cycle, check the following.
4. Check the DEF dosing valve harness. Make sure the connections are good and the contacts are clean.
5. Replace the DEF dosing valve. If the system is correct and the fault is not active, the original DEF dosing valve is bad.

10.5.15.1 DEF electrical schematic

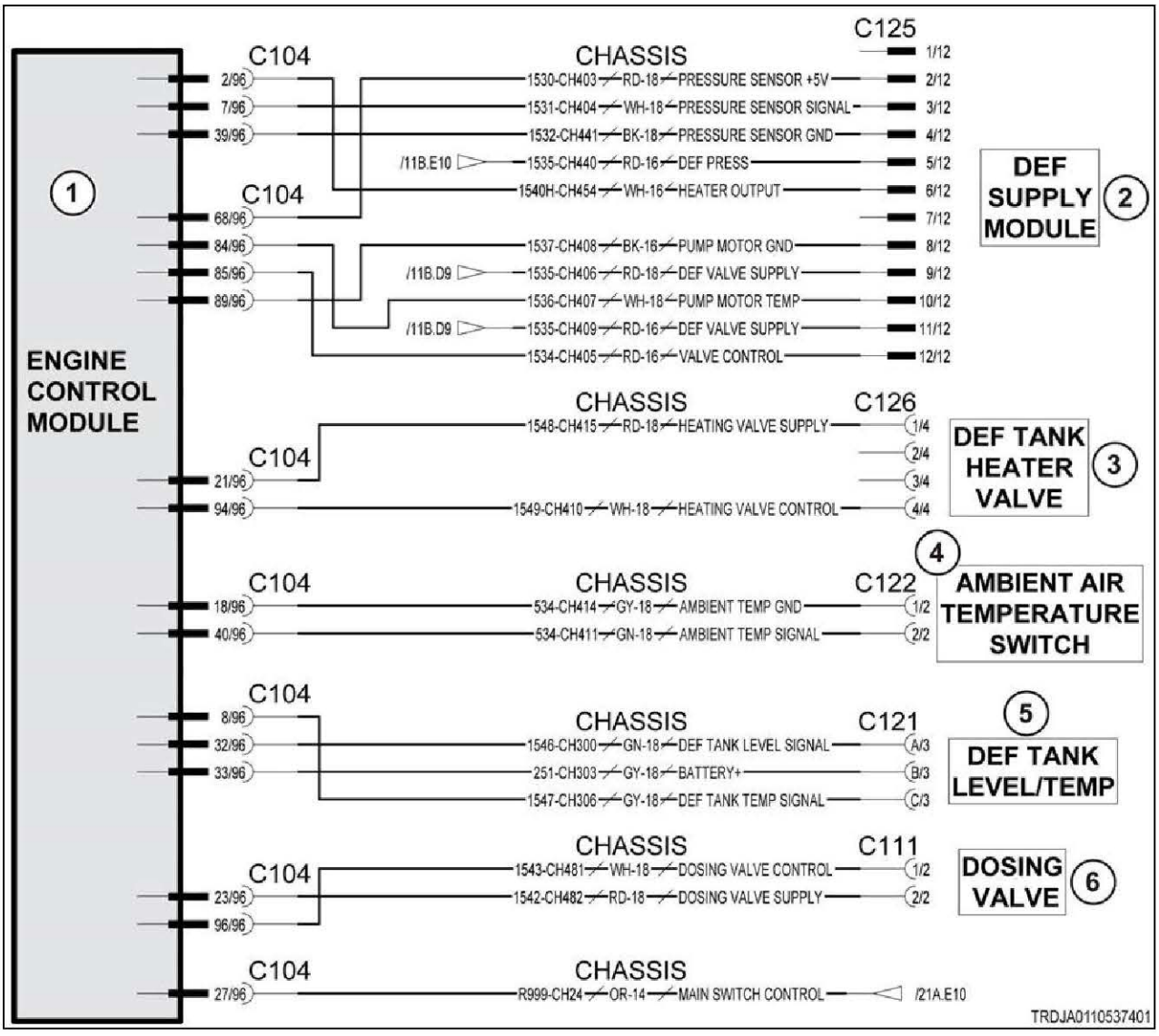

Fig. 54

Schematic legend		
Item	**Schematic term**	**Description**
1	ENGINE CONTROL MODULE	Engine module
2	DEF SUPPLY MODULE	DEF supply module
3	DEF TANK HEATER VALVE	DEF tank heater valve
4	AMBIENT AIR TEMPERATURE SWITCH	Ambient air temperature switch
5	DEF TANK LEVEL/TEMP	DEF tank level/temperature
6	DOSING VALVE	Dosing valve
--	DEF PRESS SENSOR GND	DEF pressure sensor ground
--	PUMP MOTOR GND	Pump motor ground
--	PUMP MOTOR TEMP	Pump motor temperature
--	AMBIENT TEMP GND	Ambient temperature ground

10.5.16 Code SA 00 SPN 3361 FMI 31

Over temperature on DEF dosing valve engine module power stage.

Diagnosis and solution

1. Clear the error log.
2. Restart the engine module.
3. If the fault code shows again during the next driving cycle, check the following.
4. Check the DEF dosing valve harness. Make sure the connections are good and the contacts are clean.
5. Replace the DEF dosing valve. If the system is correct and the fault is not active, the original DEF dosing valve is bad.
6. Replace the engine module. If the system is correct and the fault is not active, the original engine module is bad.

10.5.16.1 DEF electrical schematic

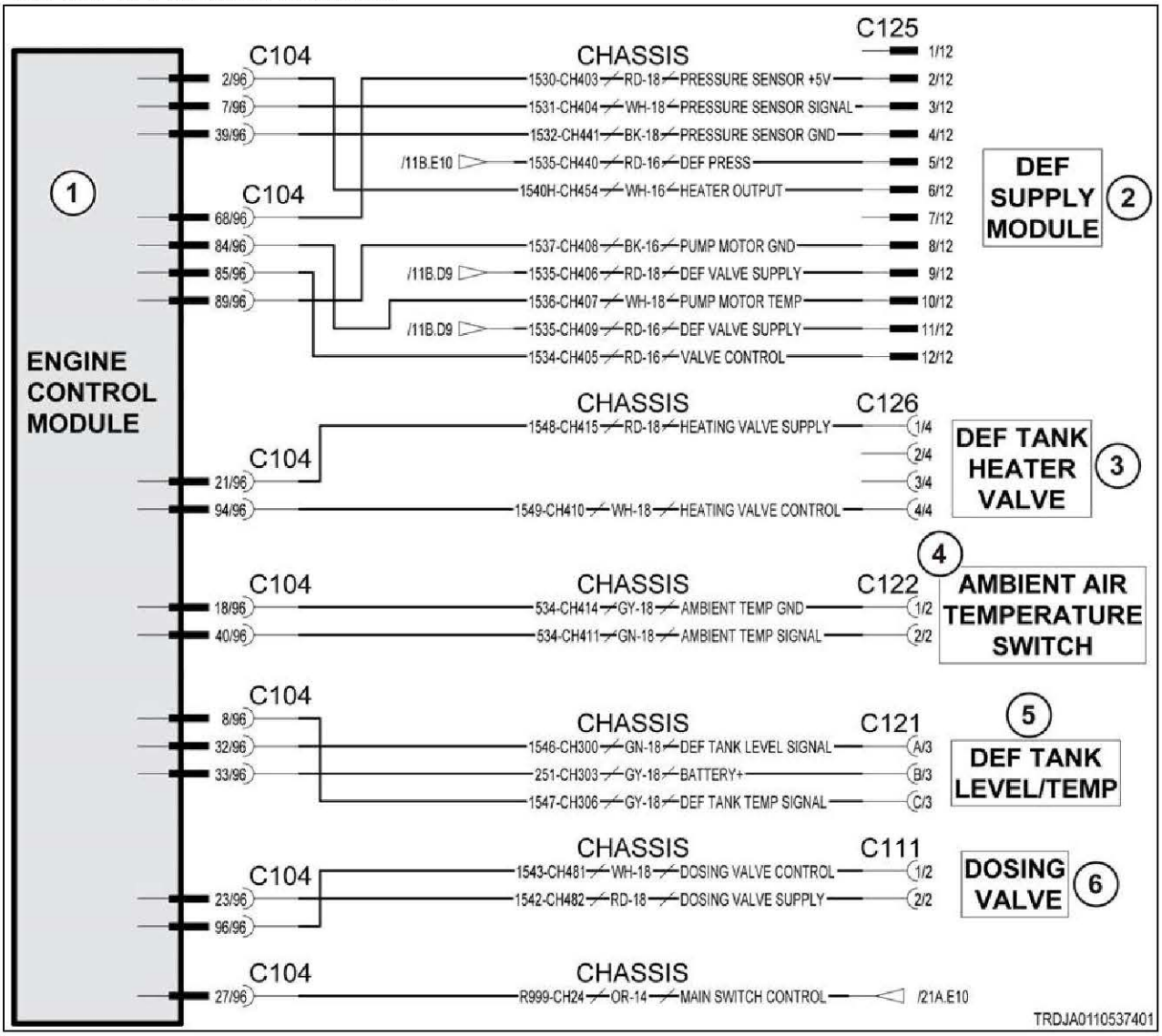

Fig. 55

Schematic legend		
Item	**Schematic term**	**Description**
1	ENGINE CONTROL MODULE	Engine module
2	DEF SUPPLY MODULE	DEF supply module
3	DEF TANK HEATER VALVE	DEF tank heater valve
4	AMBIENT AIR TEMPERATURE SWITCH	Ambient air temperature switch
5	DEF TANK LEVEL/TEMP	DEF tank level/temperature
6	DOSING VALVE	Dosing valve
--	DEF PRESS SENSOR GND	DEF pressure sensor ground
--	PUMP MOTOR GND	Pump motor ground
--	PUMP MOTOR TEMP	Pump motor temperature
--	AMBIENT TEMP GND	Ambient temperature ground

10.5.17 Code SA 00 SPN 3363 FMI 03

Short circuit on DEF tank heater coolant valve solenoid.

Diagnosis and solution

1. Clear the error log.
2. Restart the engine module.
3. If the fault code shows again during the next driving cycle, check the following.
4. Check the coolant valve solenoid harness. Make sure the connections are good and the contacts are clean.
5. Replace the coolant valve. If the system is correct and the fault code is not active, the original coolant valve is bad.

10.5.17.1 DEF electrical schematic

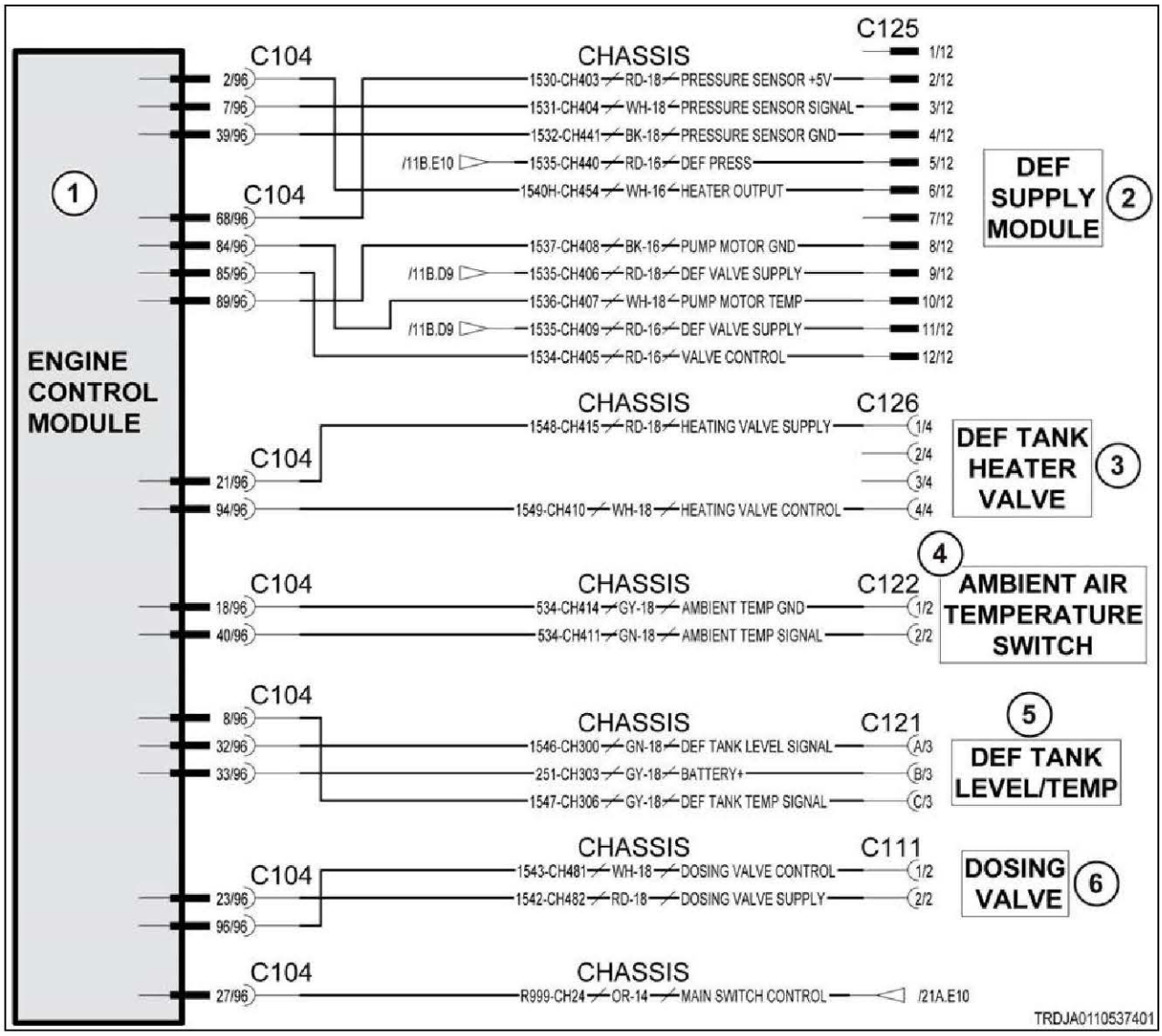

Fig. 56

Schematic legend		
Item	**Schematic term**	**Description**
1	ENGINE CONTROL MODULE	Engine module
2	DEF SUPPLY MODULE	DEF supply module
3	DEF TANK HEATER VALVE	DEF tank heater valve
4	AMBIENT AIR TEMPERATURE SWITCH	Ambient air temperature switch
5	DEF TANK LEVEL/TEMP	DEF tank level/temperature
6	DOSING VALVE	Dosing valve
--	DEF PRESS SENSOR GND	DEF pressure sensor ground
--	PUMP MOTOR GND	Pump motor ground
--	PUMP MOTOR TEMP	Pump motor temperature
--	AMBIENT TEMP GND	Ambient temperature ground

10.5.18 Code SA 00 SPN 3363 FMI 04

Short circuit on DEF tank heater coolant valve solenoid.

Diagnosis and solution

1. Clear the error log.
2. Restart the engine module.
3. If the fault code shows again during the next driving cycle, check the following.
4. Check the coolant valve solenoid harness. Make sure the connections are good and the contacts are clean.
5. Replace the coolant valve. If the system is correct and the fault code is not active, the original coolant valve is bad.

10.5.18.1 DEF electrical schematic

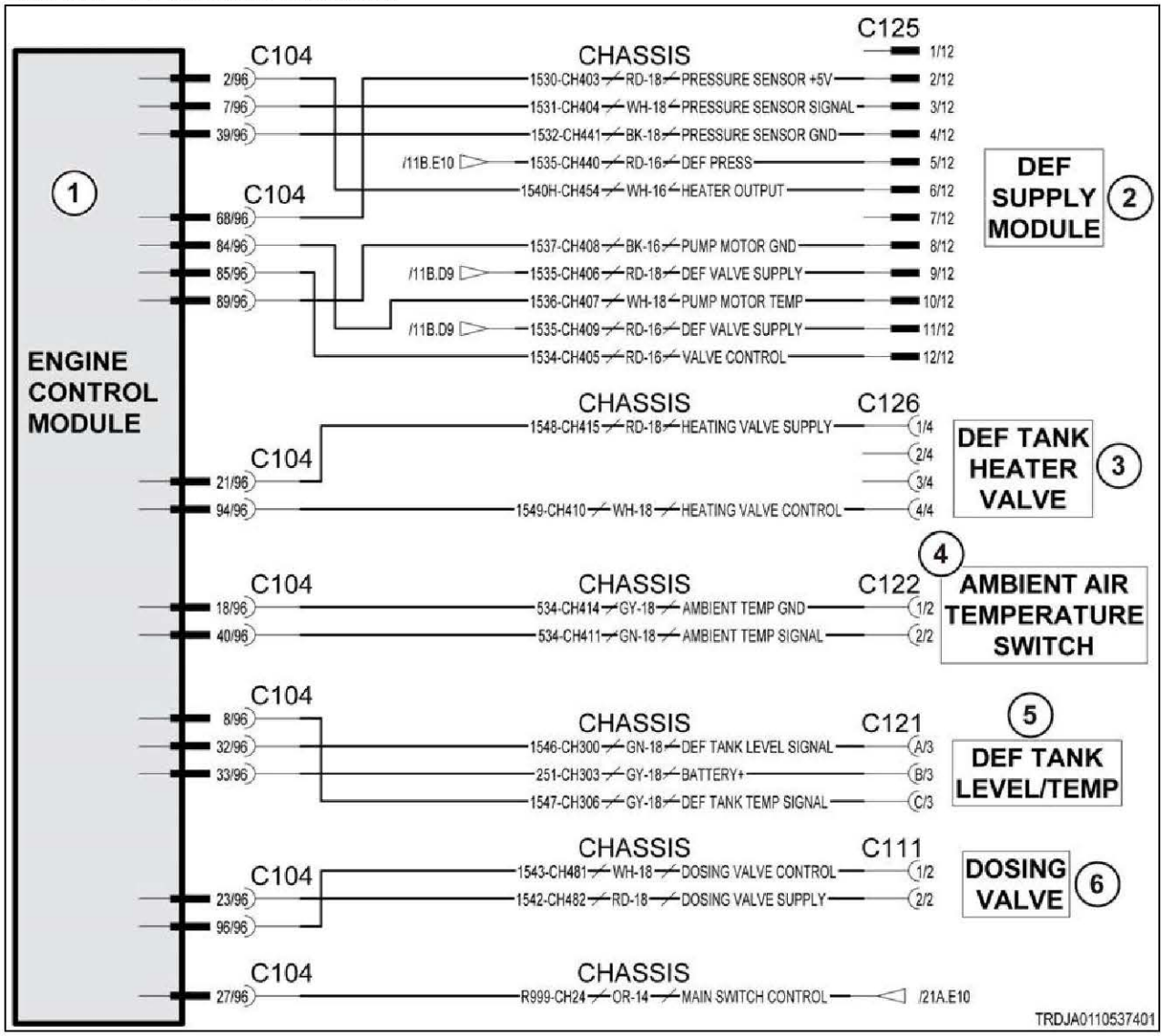

Fig. 57

Schematic legend		
Item	**Schematic term**	**Description**
1	ENGINE CONTROL MODULE	Engine module
2	DEF SUPPLY MODULE	DEF supply module
3	DEF TANK HEATER VALVE	DEF tank heater valve
4	AMBIENT AIR TEMPERATURE SWITCH	Ambient air temperature switch
5	DEF TANK LEVEL/TEMP	DEF tank level/temperature
6	DOSING VALVE	Dosing valve
--	DEF PRESS SENSOR GND	DEF pressure sensor ground
--	PUMP MOTOR GND	Pump motor ground
--	PUMP MOTOR TEMP	Pump motor temperature
--	AMBIENT TEMP GND	Ambient temperature ground

10.5.19 Code SA 00 SPN 3363 FMI 05

Open circuit on DEF tank heater coolant valve solenoid.

Diagnosis and solution

1. Clear the error log.
2. Restart the engine module.
3. If the fault code shows again during the next driving cycle, check the following.
4. Check the coolant valve solenoid harness. Make sure the connections are good and the contacts are clean.
5. Replace the coolant valve. If the system is correct and the fault code is not active, the original coolant valve is bad.

10.5.19.1 DEF electrical schematic

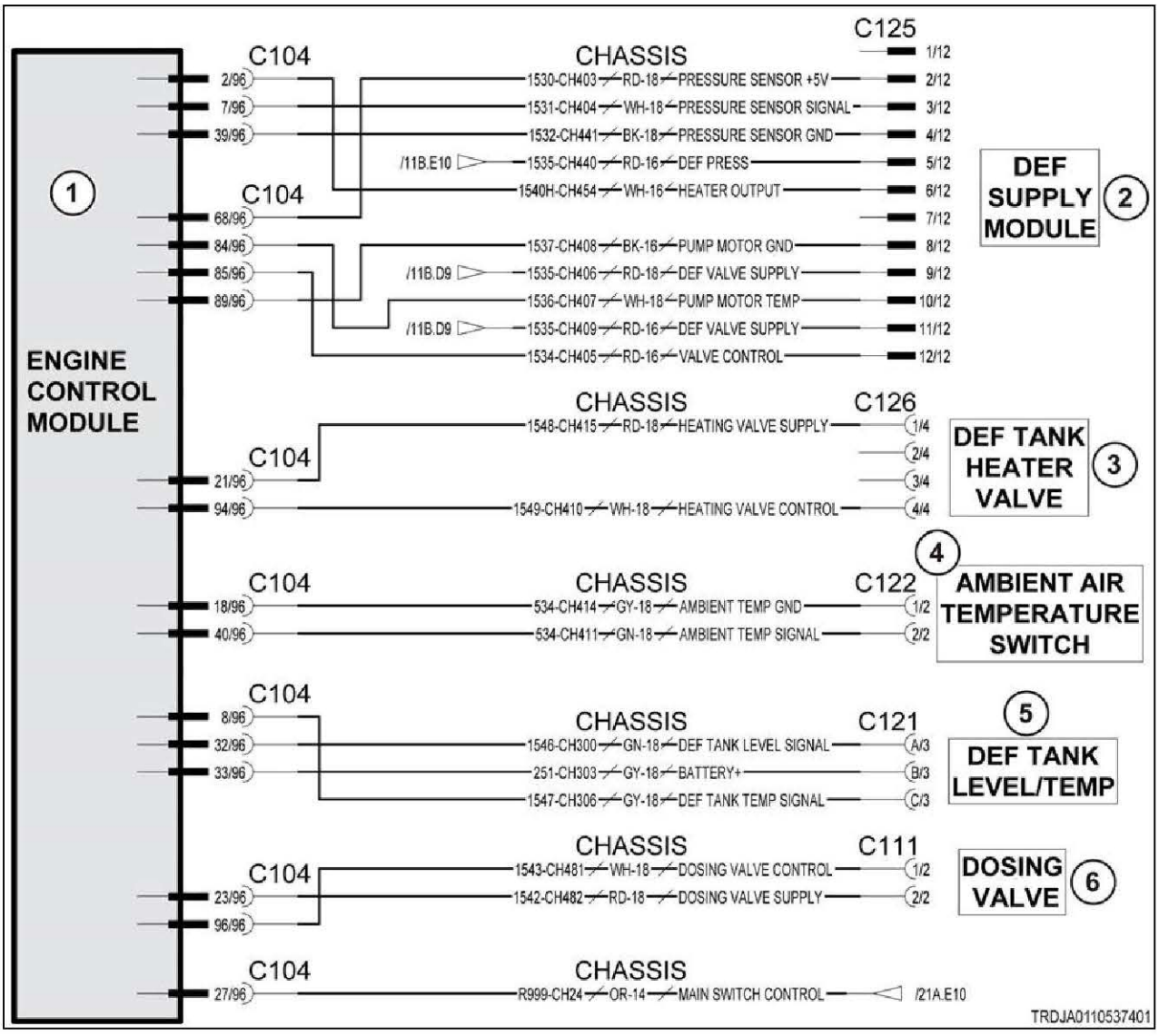

Fig. 58

Schematic legend		
Item	**Schematic term**	**Description**
1	ENGINE CONTROL MODULE	Engine module
2	DEF SUPPLY MODULE	DEF supply module
3	DEF TANK HEATER VALVE	DEF tank heater valve
4	AMBIENT AIR TEMPERATURE SWITCH	Ambient air temperature switch
5	DEF TANK LEVEL/TEMP	DEF tank level/temperature
6	DOSING VALVE	Dosing valve
--	DEF PRESS SENSOR GND	DEF pressure sensor ground
--	PUMP MOTOR GND	Pump motor ground
--	PUMP MOTOR TEMP	Pump motor temperature
--	AMBIENT TEMP GND	Ambient temperature ground

10.5.20 Code SA 00 SPN 3363 FMI 31

Over temperature on DEF tank heater engine module power stage.

Diagnosis and solution

1. Clear the error log.
2. Restart the engine module.
3. If the fault code shows again during the next driving cycle, check the following.
4. Check the coolant valve solenoid harness. Make sure the connections are good and the contacts are clean.
5. Replace the coolant valve. If the system is correct and the fault code is not active, the original coolant valve is bad.
6. Replace the engine module. If the system is correct and the fault code is not active, the original engine module is bad.

10.5.20.1 DEF electrical schematic

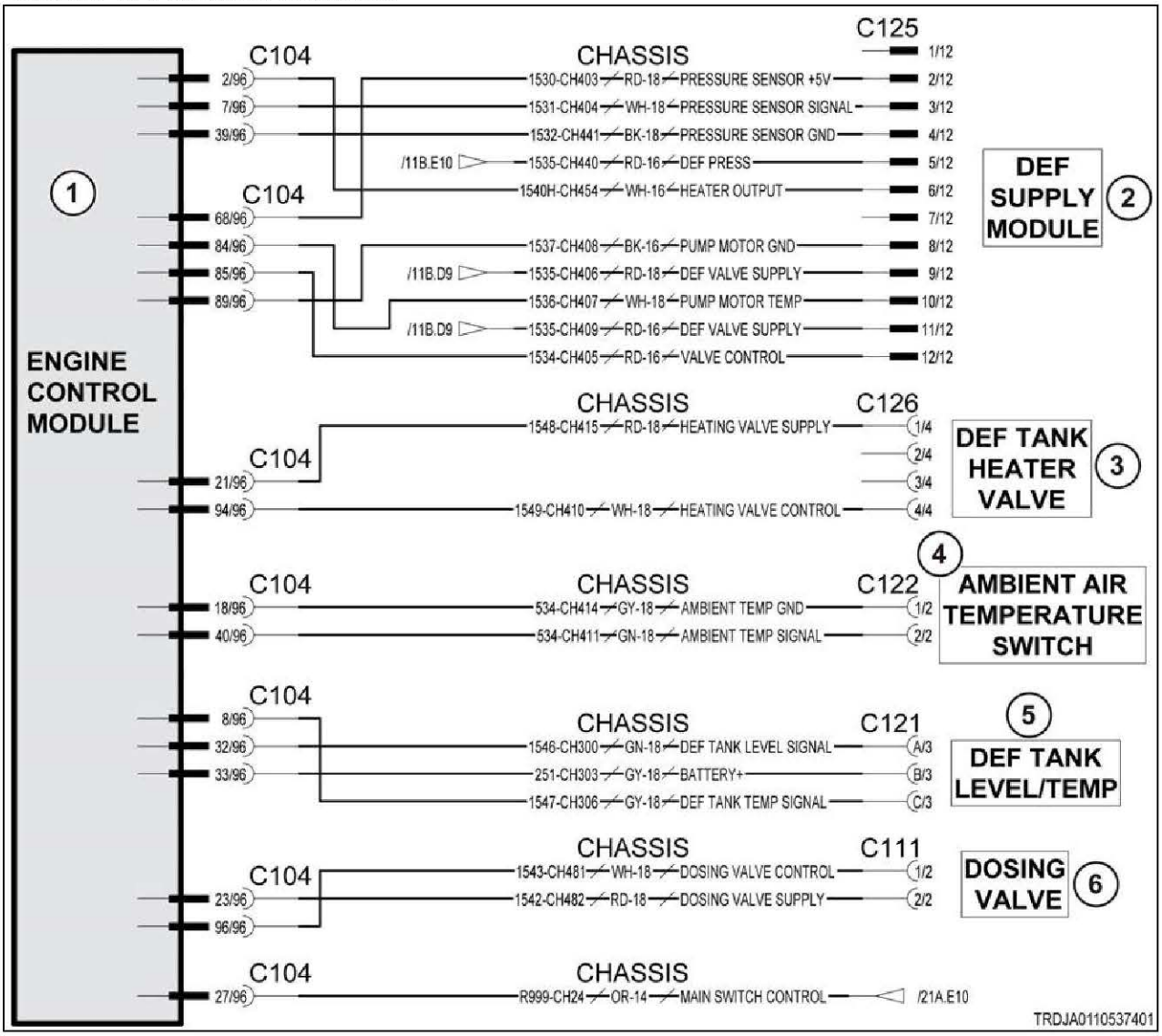

Fig. 59

Schematic legend		
Item	**Schematic term**	**Description**
1	ENGINE CONTROL MODULE	Engine module
2	DEF SUPPLY MODULE	DEF supply module
3	DEF TANK HEATER VALVE	DEF tank heater valve
4	AMBIENT AIR TEMPERATURE SWITCH	Ambient air temperature switch
5	DEF TANK LEVEL/TEMP	DEF tank level/temperature
6	DOSING VALVE	Dosing valve
--	DEF PRESS SENSOR GND	DEF pressure sensor ground
--	PUMP MOTOR GND	Pump motor ground
--	PUMP MOTOR TEMP	Pump motor temperature
--	AMBIENT TEMP GND	Ambient temperature ground

10.5.21 Code SA 00 SPN 4090 FMI 16

SCR system malfunction. NOx emission is too high.

Diagnosis and solution

1. Clear the error log.
2. Restart the engine module.
3. If the fault code shows again during the next driving cycle, check the following.
4. Check the quality of the DEF. If the DEF is bad, flush the DEF tank and fill with good DEF.
5. Check the DEF system. Make sure the SCR system can dose DEF.
6. Replace the DEF dosing module. If the system is correct and the fault code is not active, the original DEF module is bad.
7. Check the SCR catalyst. Remove the dosing valve and check the catalyst. Check for possible deposit problems or possible obstruction.

10.5.22 Code SA 00 SPN 4090 FMI 18

SCR system malfunction. Measured NOx emission level implausible.

Diagnosis and solution

1. Clear the error log.
2. Restart the engine module.
3. If the fault code shows again during the next driving cycle, check the following.
4. Check the DEF system. Make sure the SCR system can dose DEF.
5. Check the quality of the DEF. Make sure there is no contamination. If the DEF is bad, flush the DEF tank and fill with good DEF.

10.5.23 Code SA 00 SPN 4332 FMI 00

SCR system error. DEF over pressure detected.

Diagnosis and solution

1. Clear the error log.
2. Restart the engine module.
3. If the fault code shows again during the next driving cycle, check the following.
4. Check the DEF tank heater operation.
5. Change the DEF supply module main filter.
6. Change the DEF supply module backflow connector.
7. Remove the DEF backflow line to check for possible obstruction.
8. Check the DEF for contamination. If the DEF is bad, change the DEF.
9. Replace the DEF supply module. If the system is correct and the fault code is not active, the original DEF supply module is bad.

10.5.24 Code SA 00 SPN 4332 FMI 11

SCR system error. Pumped-dosed quantities balance error.

Diagnosis and solution

1. Clear the error log.
2. Restart the engine module.
3. If the fault code shows again during the next driving cycle, check the following.
4. Remove the DEF pressure line to check for obstruction.
5. Check for possible obstruction between the DEF supply module and the DEF dosing module.
6. Remove the DEF dosing valve and check the nozzle for obstruction.
7. Change the DEF supply module main filter.
8. Check the DEF for contamination. If the DEF is bad, change the DEF.
9. Replace the DEF supply module. If the system is correct and the fault code is not active, the original DEF supply module is bad.

10.5.25 Code SA 00 SPN 4332 FMI 14

SCR system error. Pressure drop test failure.

Diagnosis and solution

1. Clear the error log.
2. Restart the engine module.
3. If the fault code shows again during the next driving cycle, check the following.

   NOTE:
   If the machine is started in cold conditions, ice in the DEF pressure line is possible.
4. Remove the DEF dosing valve and check the nozzle for obstruction.
5. Remove the DEF pressure line to check for obstruction and mechanical defects.
6. Change the DEF supply module main filter.
7. Change the DEF supply module backflow connector.
8. Check the DEF for contamination. If the DEF is bad, change the DEF.
9. Replace the DEF supply module. If the system is correct and the fault code is not active, the original DEF supply module is bad.

10.5.26 Code SA 00 SPN 4332 FMI 16

SCR system error. DEF dosing pressure above normal.

Diagnosis and solution

1. Clear the error log.
2. Restart the engine module.
3. If the fault code shows again during the next driving cycle, check the following.
4. Check the backflow line for mechanical defects.
5. Remove the backflow line from the supply module.
6. Do the dosing test with the service tool.

NOTE:
If the backflow line is correct, flow will be continuous from the hose.

7. Check the backflow line connection from the DEF tank.
8. Change the DEF supply module main filter.
9. Change the DEF supply module backflow connector.
10. Check the DEF for contamination. If the DEF is bad, change the DEF.
11. Replace the DEF supply module. If the system is correct and the fault code is not active, the original DEF supply module is bad.

10.5.27 Code SA 00 SPN 4332 FMI 18

SCR system error. DEF dosing pressure below normal.

Diagnosis and solution

1. Clear the error log.
2. Restart the engine module.
3. If the fault code shows again during the next driving cycle, check the following.
4. Check the DEF system for leaks.
5. Change the DEF supply module inlet connector.
6. Change the DEF supply module main filter.
7. Change the DEF tank suction filter.
8. Check the DEF tank for correct ventilation.
9. Check the DEF for contamination. If the DEF is bad, change the DEF.
10. Change the DEF supply module backflow connector.
11. Replace the DEF supply module. If the system is correct and the fault code is not active, the original DEF supply module is bad.

10.5.28 Code SA 00 SPN 4332 FMI 31

SCR system error. Emptying not completed at previous shutdown.

Diagnosis and solution

1. Clear the error log.
2. Restart the engine module.
3. If the fault code shows again during the next driving cycle, check the following.
4. Check the machine main switch operation. If the main switch is manual, do not switch off until the DEF system is empty.
5. Replace the DEF supply module. If the system is correct and the fault code is not active, the original DEF supply module is bad.

10.5.29 Code SA 00 SPN 4334 FMI 03

Measured DEF supply module pressure sensor signal is above normal operating range.

Diagnosis and solution

1. Clear the error log.
2. Restart the engine module.

3. If the fault code shows again during the next driving cycle, check the following.
4. Check the DEF supply module harness. Make sure the connections are good and the contacts are clean.
5. Replace the DEF supply module. If the system is correct and the fault code is not active, the original DEF supply module is bad.

10.5.29.1 DEF electrical schematic

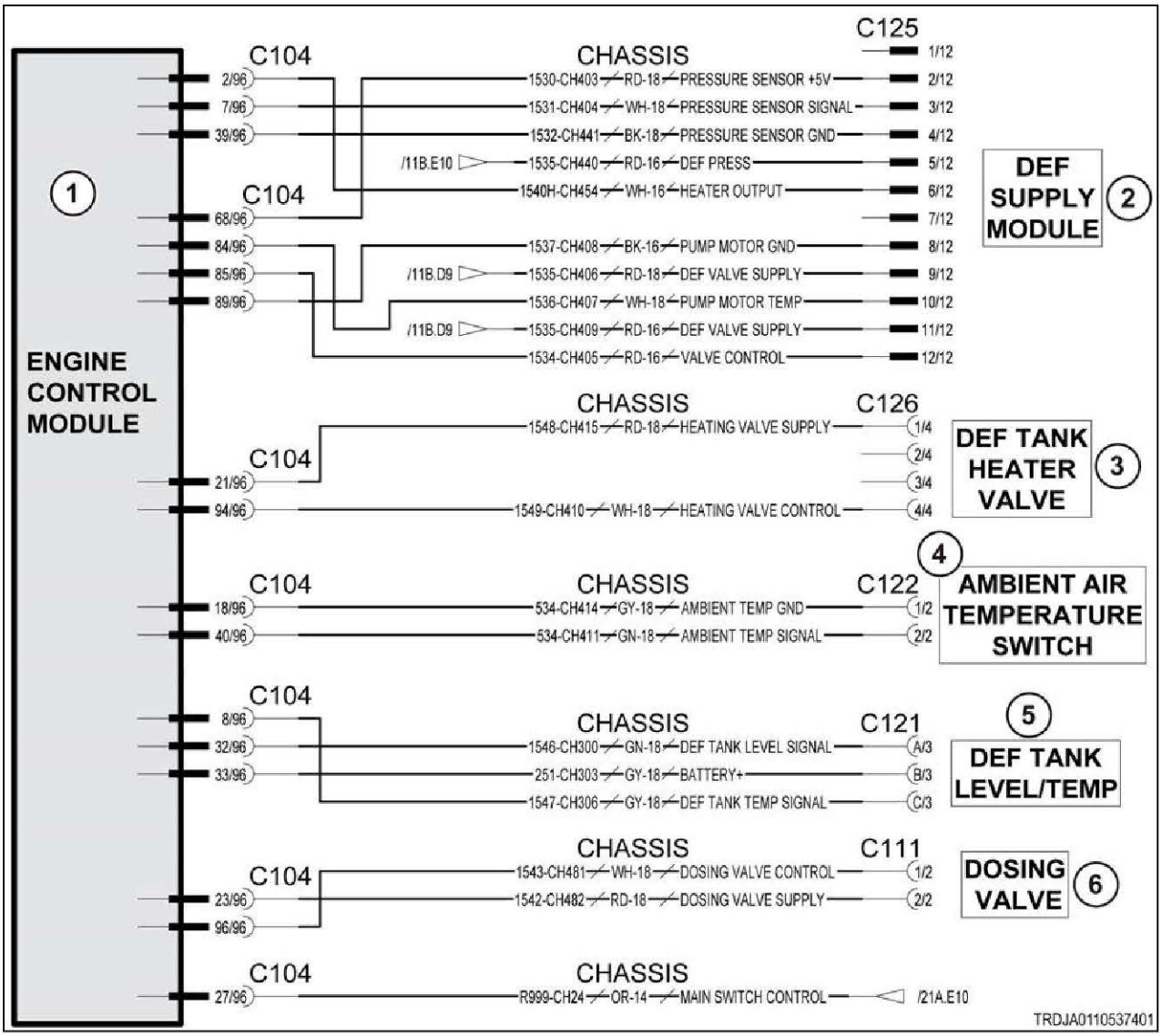

Fig. 60

Schematic legend		
Item	**Schematic term**	**Description**
1	ENGINE CONTROL MODULE	Engine module
2	DEF SUPPLY MODULE	DEF supply module
3	DEF TANK HEATER VALVE	DEF tank heater valve
4	AMBIENT AIR TEMPERATURE SWITCH	Ambient air temperature switch
5	DEF TANK LEVEL/TEMP	DEF tank level/temperature
6	DOSING VALVE	Dosing valve

Schematic legend		
Item	Schematic term	Description
--	DEF PRESS SENSOR GND	DEF pressure sensor ground
--	PUMP MOTOR GND	Pump motor ground
--	PUMP MOTOR TEMP	Pump motor temperature
--	AMBIENT TEMP GND	Ambient temperature ground

10.5.30 Code SA 00 SPN 4334 FMI 04

Measured DEF supply module pressure sensor signal is below normal operating range.

Diagnosis and solution

1. Clear the error log.
2. Restart the engine module.
3. If the fault code shows again during the next driving cycle, check the following.
4. Check the DEF supply module harness. Make sure the connections are good and the contacts are clean.
5. Replace the DEF supply module. If the system is correct and the fault code is not active, the original DEF supply module is bad.

10.5.30.1 DEF electrical schematic

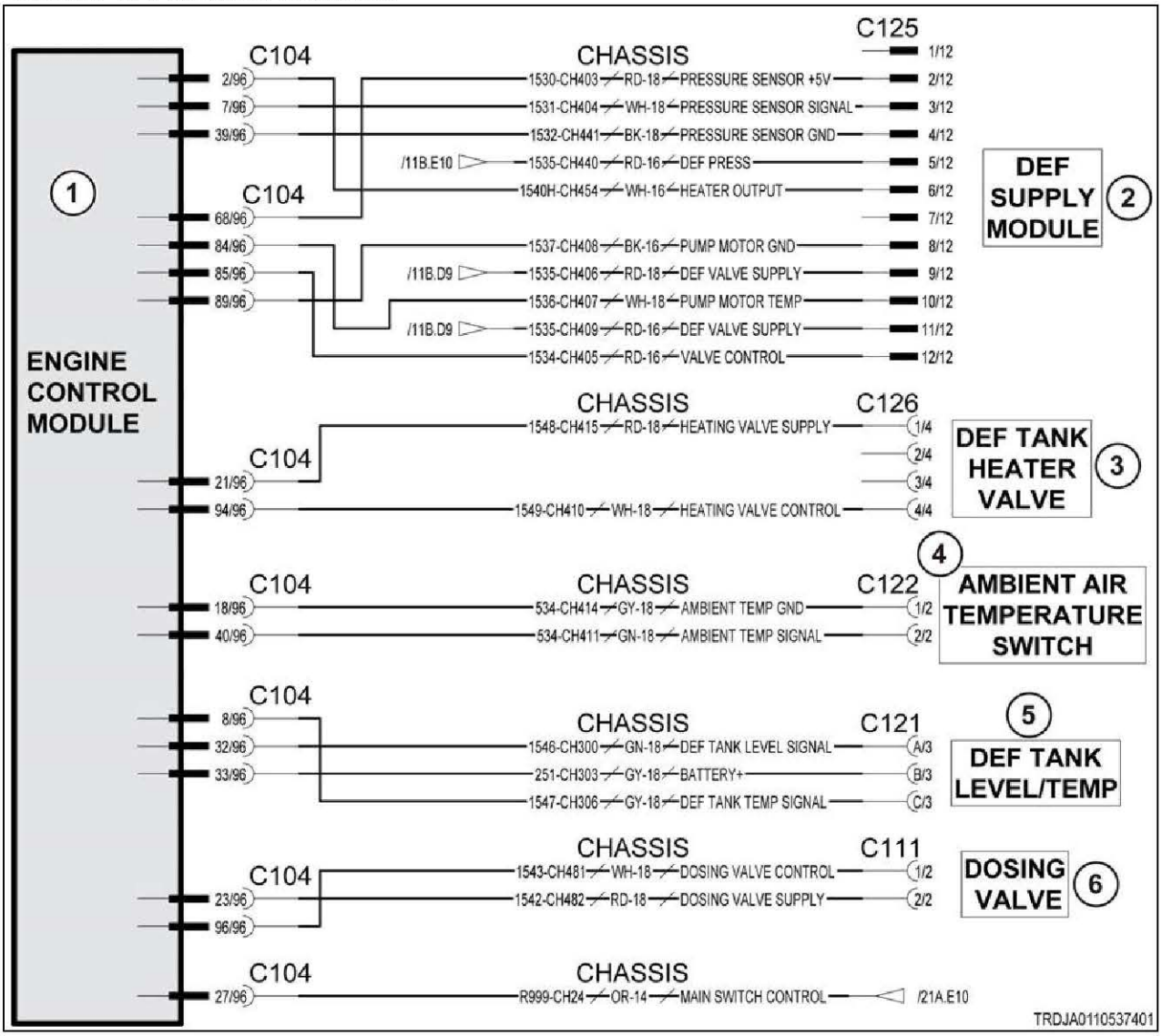

Fig. 61

Schematic legend		
Item	**Schematic term**	**Description**
1	ENGINE CONTROL MODULE	Engine module
2	DEF SUPPLY MODULE	DEF supply module
3	DEF TANK HEATER VALVE	DEF tank heater valve
4	AMBIENT AIR TEMPERATURE SWITCH	Ambient air temperature switch
5	DEF TANK LEVEL/TEMP	DEF tank level/temperature
6	DOSING VALVE	Dosing valve
--	DEF PRESS SENSOR GND	DEF pressure sensor ground
--	PUMP MOTOR GND	Pump motor ground
--	PUMP MOTOR TEMP	Pump motor temperature
--	AMBIENT TEMP GND	Ambient temperature ground

10.5.31 Code SA 00 SPN 4340 FMI 03

Short circuit on the DEF suction line heater control circuit.

Diagnosis and solution

1. Clear the error log.
2. Restart the engine module.
3. If the fault code shows again during the next driving cycle, check the following.
4. Check the DEF suction line heater relay harness. Make sure the connections are good and the contacts are clean.
5. Replace the DEF suction line heater relay. If the system is correct and the fault code is not active, the original DEF suction line heater relay is bad.

10.5.31.1 DEF electrical schematic

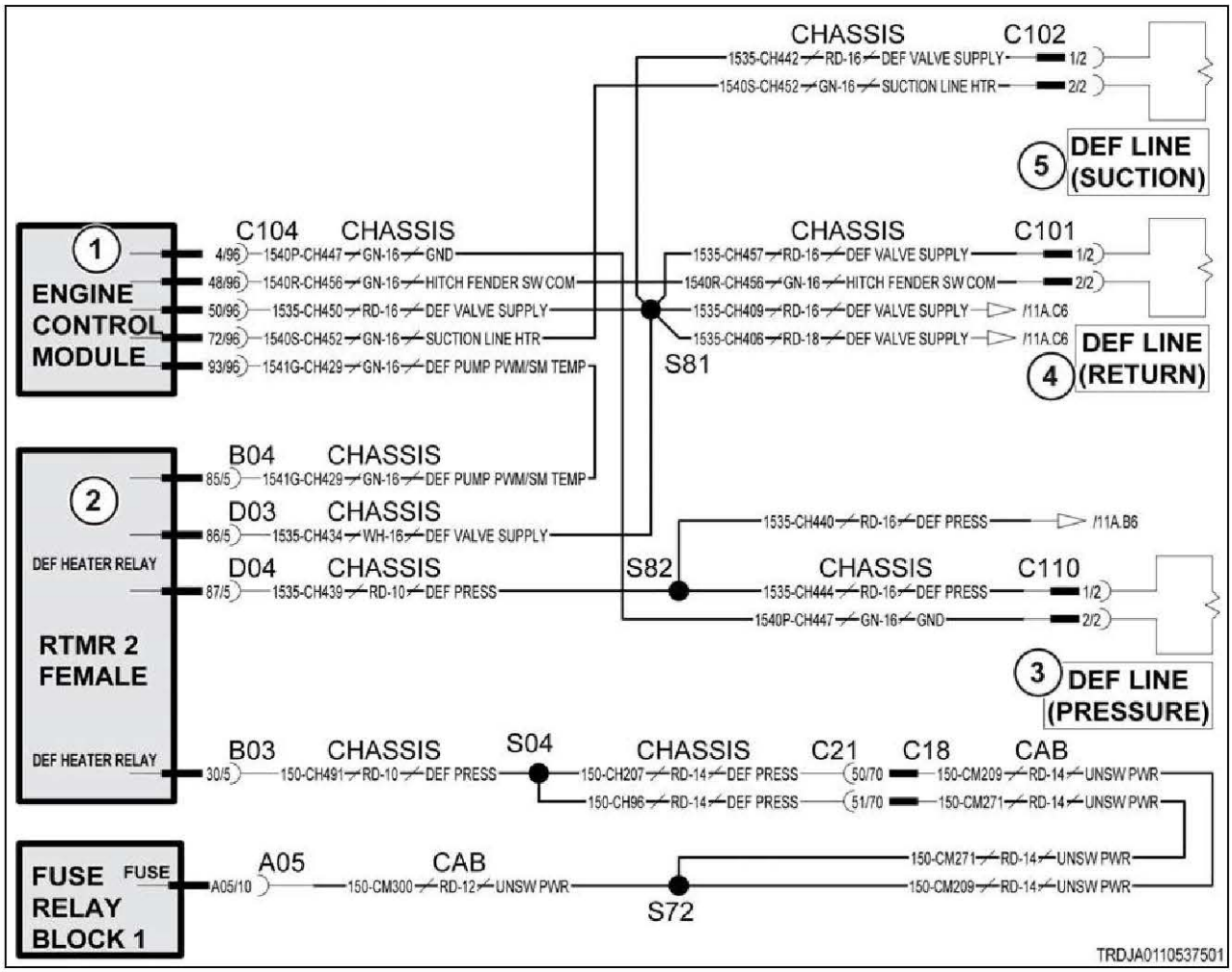

Fig. 62

Schematic legend		
Item	**Schematic term**	**Description**
1	ENGINE CONTROL MODULE	Engine module
2	RTMR 2 FEMALE	Rear terminal mini-fuse relay 2 female
3	DEF LINE (PRESSURE)	DEF pressure line

Schematic legend		
Item	**Schematic term**	**Description**
4	DEF LINE (RETURN)	DEF return line
5	DEF LINE (SUCTION)	DEF suction line
--	SUCTION LINE HTR	DEF suction line heater
--	HITCH FENDER SW COM	Hitch fender switch common
--	DEF PUMP PWM/SM TEMP	DEF pump pulse width modulation/supply module temperature
--	DEF PRESS	DEF pressure
--	UNSW PWR	Unswitched power

10.5.32 Code SA 00 SPN 4340 FMI 04

Short circuit on the DEF suction line heater control circuit.

Diagnosis and solution

1. Clear the error log.
2. Restart the engine module.
3. If the fault code shows again during the next driving cycle, check the following.
4. Check the DEF suction line heater relay harness. Make sure the connections are good and the contacts are clean.
5. Replace the DEF suction line heater relay. If the system is correct and the fault code is not active, the original DEF suction line heater relay is bad.

10.5.32.1 DEF electrical schematic

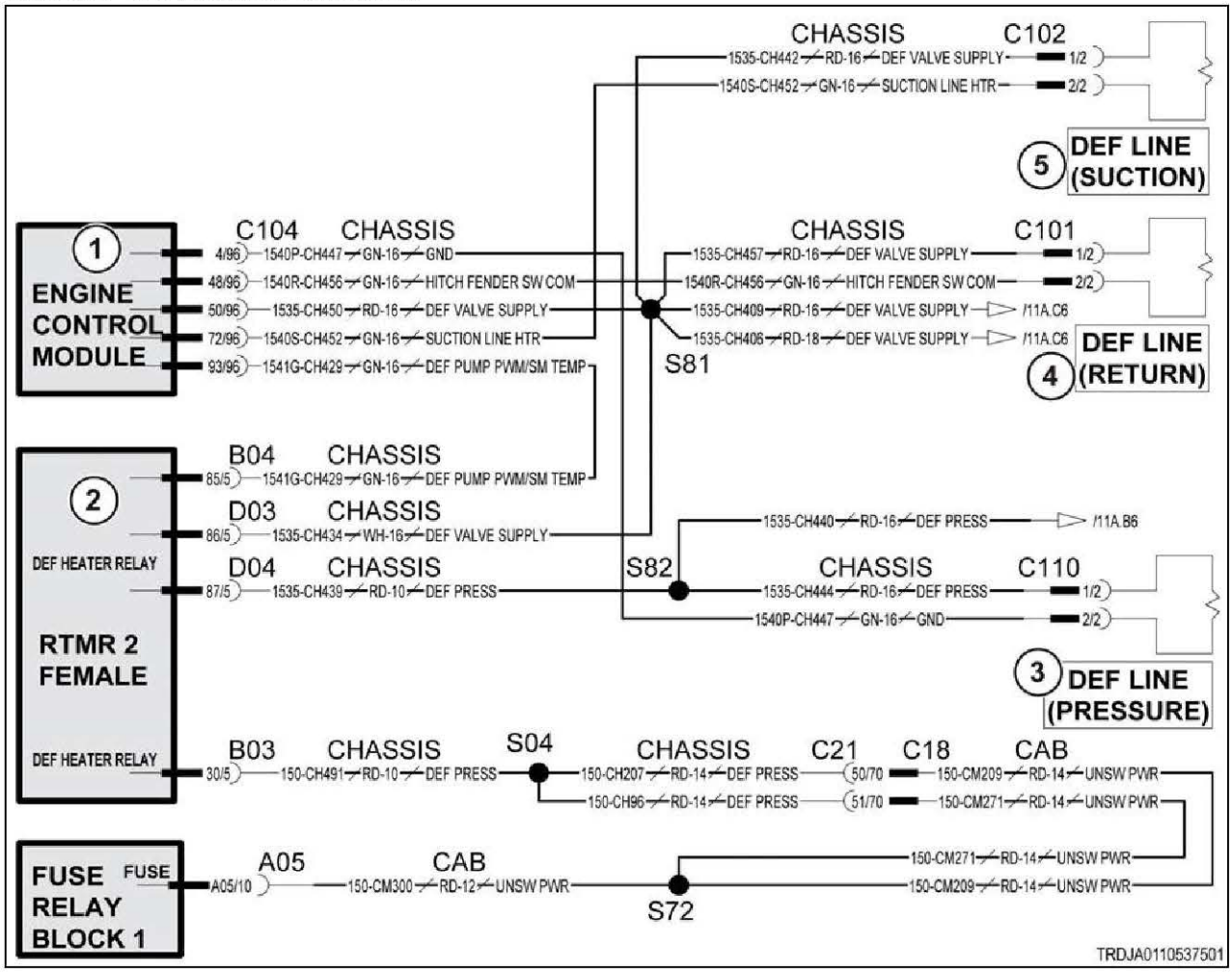

Fig. 63

Schematic legend		
Item	**Schematic term**	**Description**
1	ENGINE CONTROL MODULE	Engine module
2	RTMR 2 FEMALE	Rear terminal mini-fuse relay 2 female
3	DEF LINE (PRESSURE)	DEF pressure line
4	DEF LINE (RETURN)	DEF return line
5	DEF LINE (SUCTION)	DEF suction line
--	SUCTION LINE HTR	DEF suction line heater
--	HITCH FENDER SW COM	Hitch fender switch common
--	DEF PUMP PWM/SM TEMP	DEF pump pulse width modulation/supply module temperature
--	DEF PRESS	DEF pressure
--	UNSW PWR	Unswitched power

10.5.33 Code SA 00 SPN 4340 FMI 05

Open circuit on the DEF suction line heater control circuit.

Diagnosis and solution

1. Clear the error log.
2. Restart the engine module.
3. If the fault code shows again during the next driving cycle, check the following.
4. Check the DEF suction line heater relay harness. Make sure the connections are good and the contacts are clean.
5. Replace the DEF suction line heater relay. If the system is correct and the fault code is not active, the original DEF suction line heater relay is bad.

10.5.33.1 DEF electrical schematic

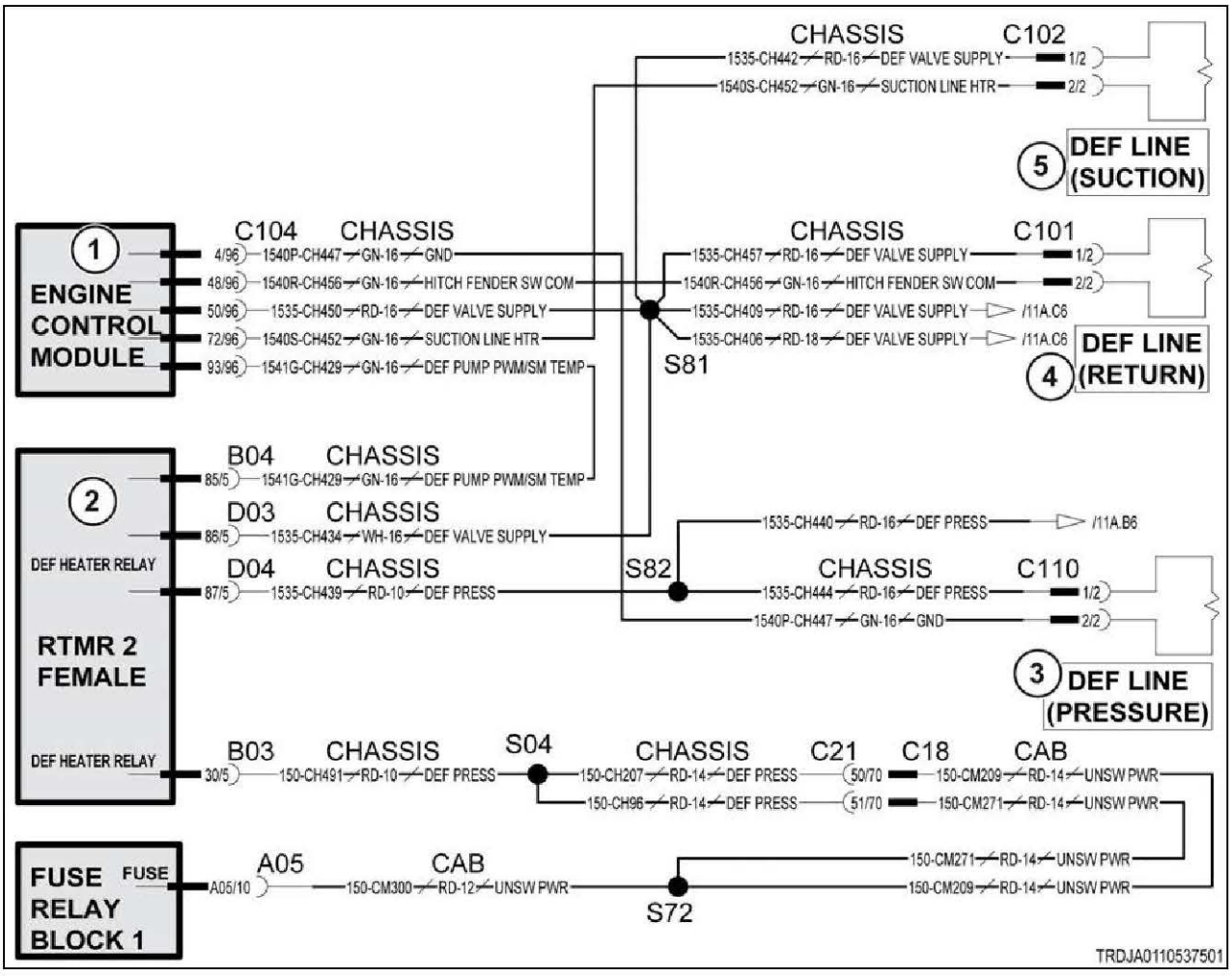

Fig. 64

Schematic legend		
Item	**Schematic term**	**Description**
1	ENGINE CONTROL MODULE	Engine module
2	RTMR 2 FEMALE	Rear terminal mini-fuse relay 2 female
3	DEF LINE (PRESSURE)	DEF pressure line

Schematic legend		
Item	Schematic term	Description
4	DEF LINE (RETURN)	DEF return line
5	DEF LINE (SUCTION)	DEF suction line
--	SUCTION LINE HTR	DEF suction line heater
--	HITCH FENDER SW COM	Hitch fender switch common
--	DEF PUMP PWM/SM TEMP	DEF pump pulse width modulation/supply module temperature
--	DEF PRESS	DEF pressure
--	UNSW PWR	Unswitched power

10.5.34 Code SA 00 SPN 4340 FMI 31

DEF suction line heater engine module power stage over temperature.

Diagnosis and solution

1. Clear the error log.
2. Restart the engine module.
3. If the fault code shows again during the next driving cycle, check the following.
4. Check the DEF suction line heater relay harness. Make sure the connections are good and the contacts are clean.
5. Replace the DEF suction line heater relay. If the system is correct and the fault code is not active, the original DEF suction line heater relay is bad.
6. Replace the engine module. If the system is correct and the fault code is not active, the original engine module is bad.

10.5.34.1 DEF electrical schematic

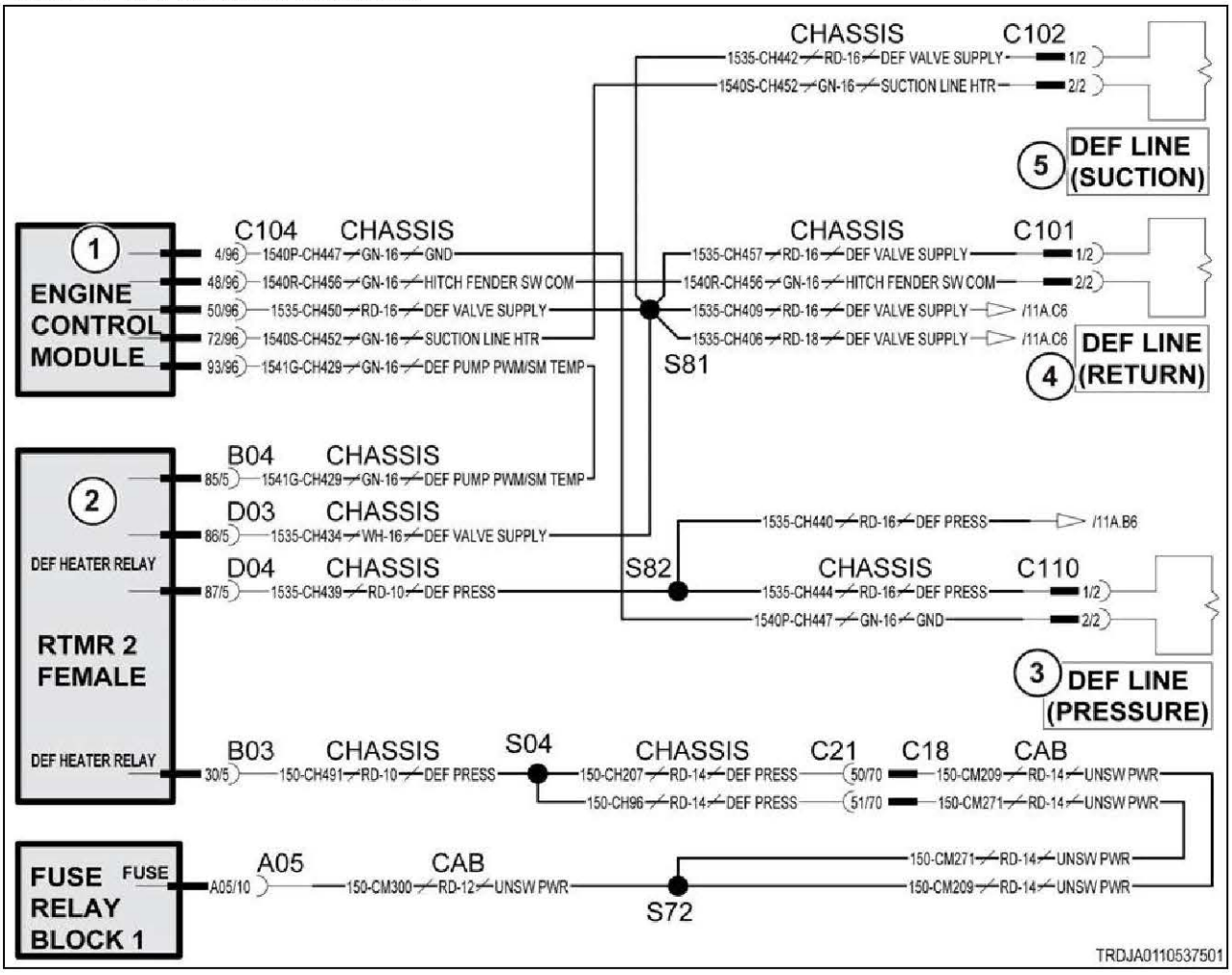

Fig. 65

Schematic legend		
Item	**Schematic term**	**Description**
1	ENGINE CONTROL MODULE	Engine module
2	RTMR 2 FEMALE	Rear terminal mini-fuse relay 2 female
3	DEF LINE (PRESSURE)	DEF pressure line
4	DEF LINE (RETURN)	DEF return line
5	DEF LINE (SUCTION)	DEF suction line
--	SUCTION LINE HTR	DEF suction line heater
--	HITCH FENDER SW COM	Hitch fender switch common
--	DEF PUMP PWM/SM TEMP	DEF pump pulse width modulation/supply module temperature
--	DEF PRESS	DEF pressure
--	UNSW PWR	Unswitched power

10.5.35 Code SA 00 SPN 4342 FMI 03

Short circuit on DEF backflow line heater control circuit.

Diagnosis and solution

1. Clear the error log.
2. Restart the engine module.
3. If the fault code shows again during the next driving cycle, check the following.
4. Check the DEF backflow line heater harness. Make sure the connections are good and the contacts are clean.
5. Replace the DEF backflow line heater relay. If the system is correct and the fault code is not active, the original DEF backflow line heater relay is bad.

10.5.35.1 DEF electrical schematic

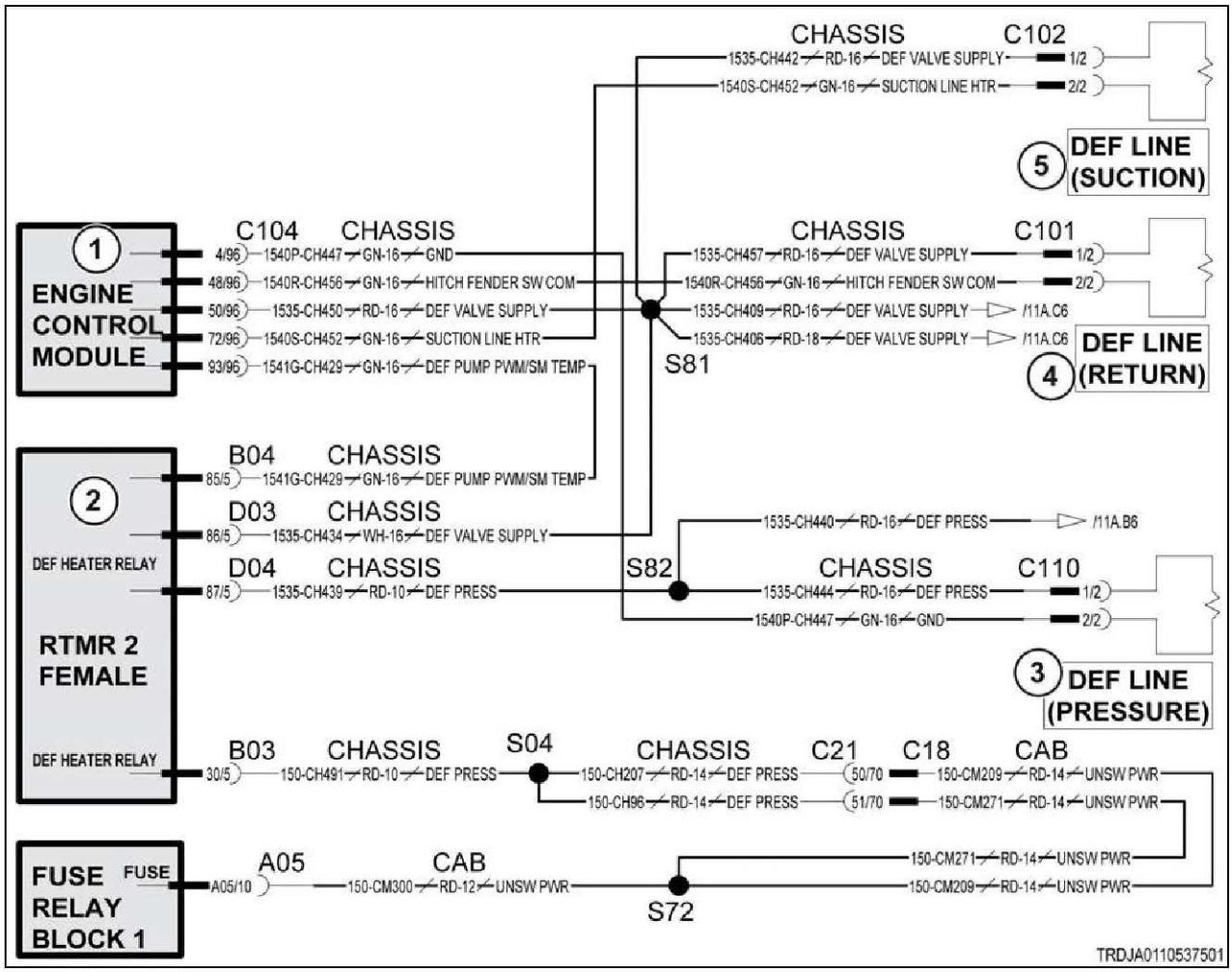

Fig. 66

Schematic legend		
Item	**Schematic term**	**Description**
1	ENGINE CONTROL MODULE	Engine module
2	RTMR 2 FEMALE	Rear terminal mini-fuse relay 2 female
3	DEF LINE (PRESSURE)	DEF pressure line

Schematic legend		
Item	Schematic term	Description
4	DEF LINE (RETURN)	DEF return line
5	DEF LINE (SUCTION)	DEF suction line
--	SUCTION LINE HTR	DEF suction line heater
--	HITCH FENDER SW COM	Hitch fender switch common
--	DEF PUMP PWM/SM TEMP	DEF pump pulse width modulation/supply module temperature
--	DEF PRESS	DEF pressure
--	UNSW PWR	Unswitched power

10.5.36 Code SA 00 SPN 4342 FMI 04

Short circuit on DEF backflow line heater control circuit.

Diagnosis and solution

1. Clear the error log.
2. Restart the engine module.
3. If the fault code shows again during the next driving cycle, check the following.
4. Check the DEF backflow line heater harness. Make sure the connections are good and the contacts are clean.
5. Replace the DEF backflow line heater relay. If the system is correct and the fault code is not active, the original DEF backflow line heater relay is bad.

10.5.36.1 DEF electrical schematic

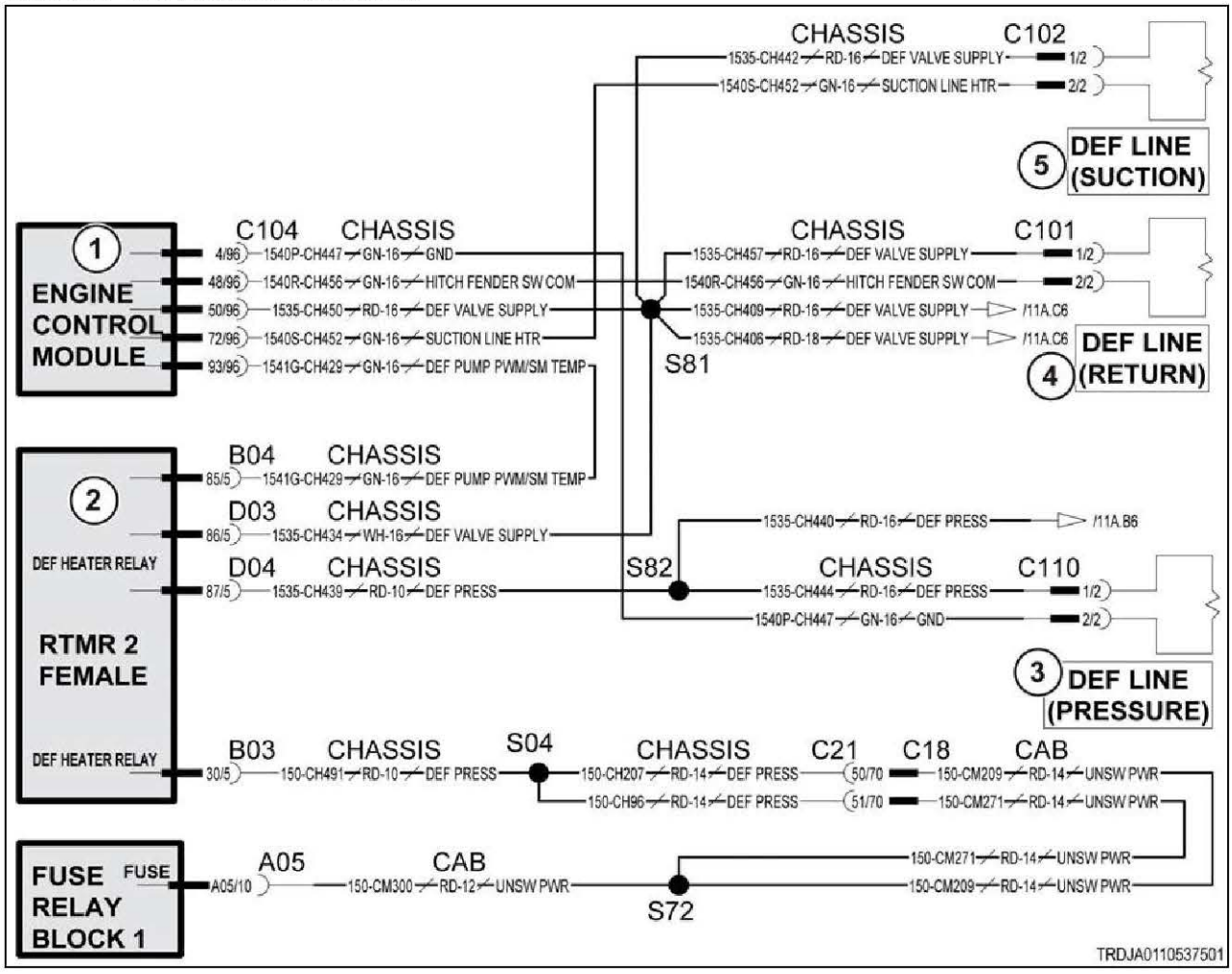

Fig. 67

Schematic legend		
Item	**Schematic term**	**Description**
1	ENGINE CONTROL MODULE	Engine module
2	RTMR 2 FEMALE	Rear terminal mini-fuse relay 2 female
3	DEF LINE (PRESSURE)	DEF pressure line
4	DEF LINE (RETURN)	DEF return line
5	DEF LINE (SUCTION)	DEF suction line
--	SUCTION LINE HTR	DEF suction line heater
--	HITCH FENDER SW COM	Hitch fender switch common
--	DEF PUMP PWM/SM TEMP	DEF pump pulse width modulation/supply module temperature
--	DEF PRESS	DEF pressure
--	UNSW PWR	Unswitched power

10.5.37 Code SA 00 SPN 4342 FMI 05

Open circuit on DEF backflow line heater control circuit.

Diagnosis and solution

1. Clear the error log.
2. Restart the engine module.
3. If the fault code shows again during the next driving cycle, check the following.
4. Check the DEF backflow line heater harness. Make sure the connections are good and the contacts are clean.
5. Replace the DEF backflow line heater relay. If the system is correct and the fault code is not active, the original DEF backflow line heater relay is bad.

10.5.37.1 DEF electrical schematic

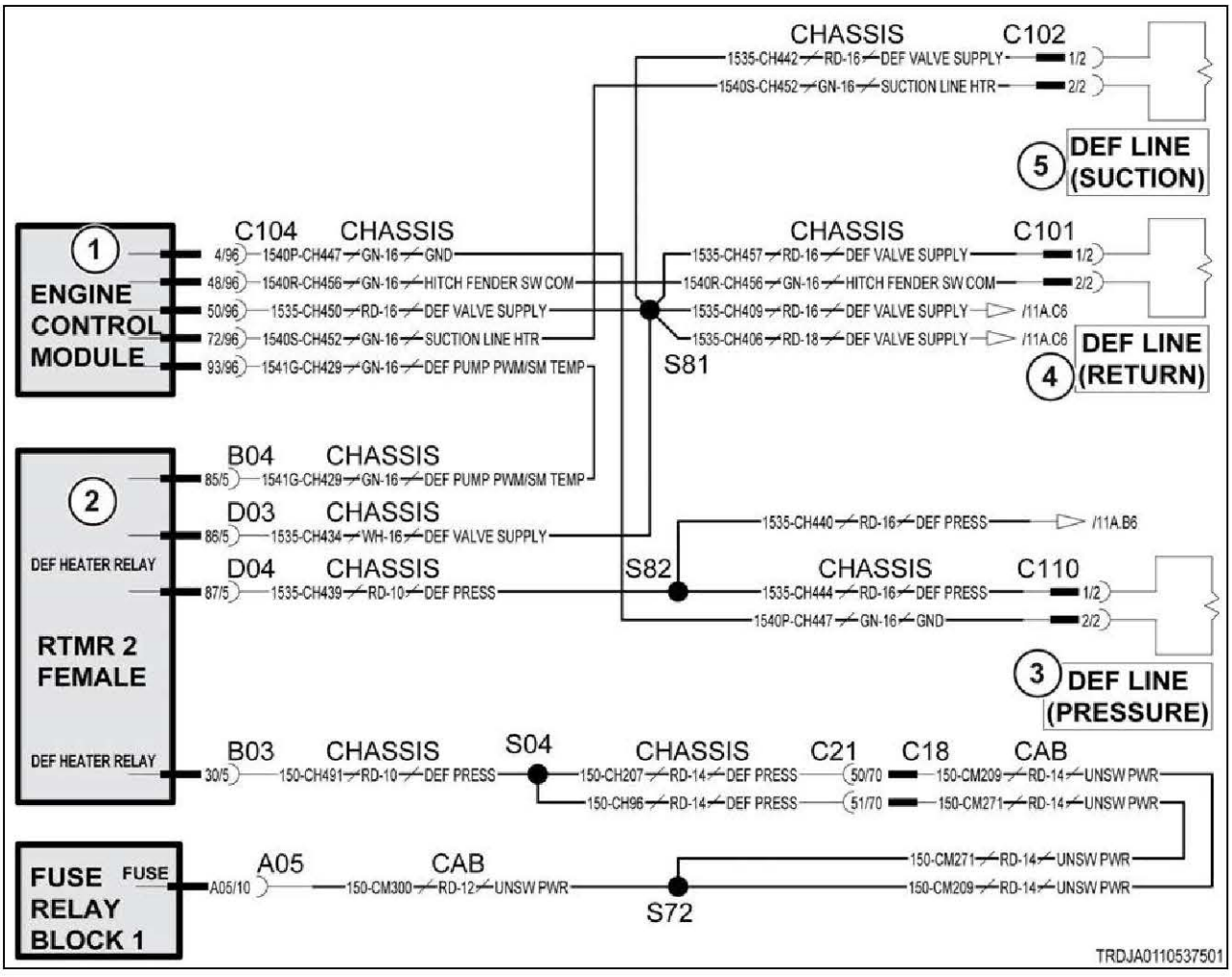

Fig. 68

Schematic legend		
Item	**Schematic term**	**Description**
1	ENGINE CONTROL MODULE	Engine module
2	RTMR 2 FEMALE	Rear terminal mini-fuse relay 2 female
3	DEF LINE (PRESSURE)	DEF pressure line

Schematic legend		
Item	**Schematic term**	**Description**
4	DEF LINE (RETURN)	DEF return line
5	DEF LINE (SUCTION)	DEF suction line
--	SUCTION LINE HTR	DEF suction line heater
--	HITCH FENDER SW COM	Hitch fender switch common
--	DEF PUMP PWM/SM TEMP	DEF pump pulse width modulation/supply module temperature
--	DEF PRESS	DEF pressure
--	UNSW PWR	Unswitched power

10.5.38 Code SA 00 SPN 4342 FMI 31

Over temperature on DEF backflow line heater engine module power stage.

Diagnosis and solution

1. Clear the error log.
2. Restart the engine module.
3. If the fault code shows again during the next driving cycle, check the following.
4. Check the DEF backflow line heater harness. Make sure the connections are good and the contacts are clean.
5. Replace the DEF backflow line heater relay. If the system is correct and the fault code is not active, the original DEF backflow line heater relay is bad.
6. Replace the engine module. If the system is correct and the fault code is not active, the original engine module is bad.

10.5.38.1 DEF electrical schematic

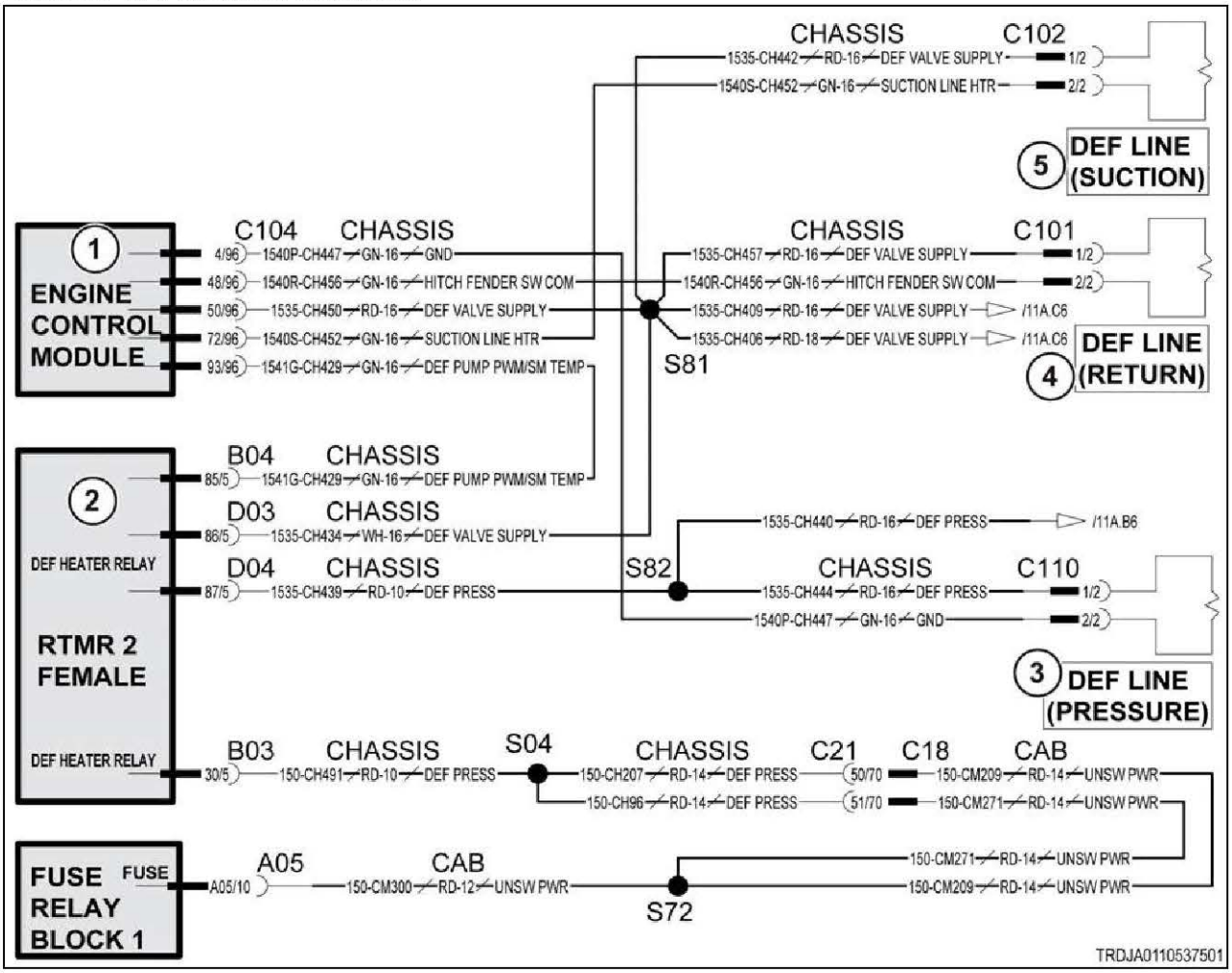

Fig. 69

Schematic legend		
Item	**Schematic term**	**Description**
1	ENGINE CONTROL MODULE	Engine module
2	RTMR 2 FEMALE	Rear terminal mini-fuse relay 2 female
3	DEF LINE (PRESSURE)	DEF pressure line
4	DEF LINE (RETURN)	DEF return line
5	DEF LINE (SUCTION)	DEF suction line
--	SUCTION LINE HTR	DEF suction line heater
--	HITCH FENDER SW COM	Hitch fender switch common
--	DEF PUMP PWM/SM TEMP	DEF pump pulse width modulation/supply module temperature
--	DEF PRESS	DEF pressure
--	UNSW PWR	Unswitched power

10.5.39 Code SA 00 SPN 4344 FMI 02

DEF supply module temperature signal is out of operating range.

Diagnosis and solution

1. Clear the error log.
2. Restart the engine module.
3. If the fault code shows again during the next driving cycle, check the following.
4. Check the DEF supply module harness. Make sure the connections are good and the contacts are clean.
5. Replace the DEF supply module. If the system is correct and the fault code is not active, the original DEF supply module is bad.

10.5.39.1 DEF electrical schematic

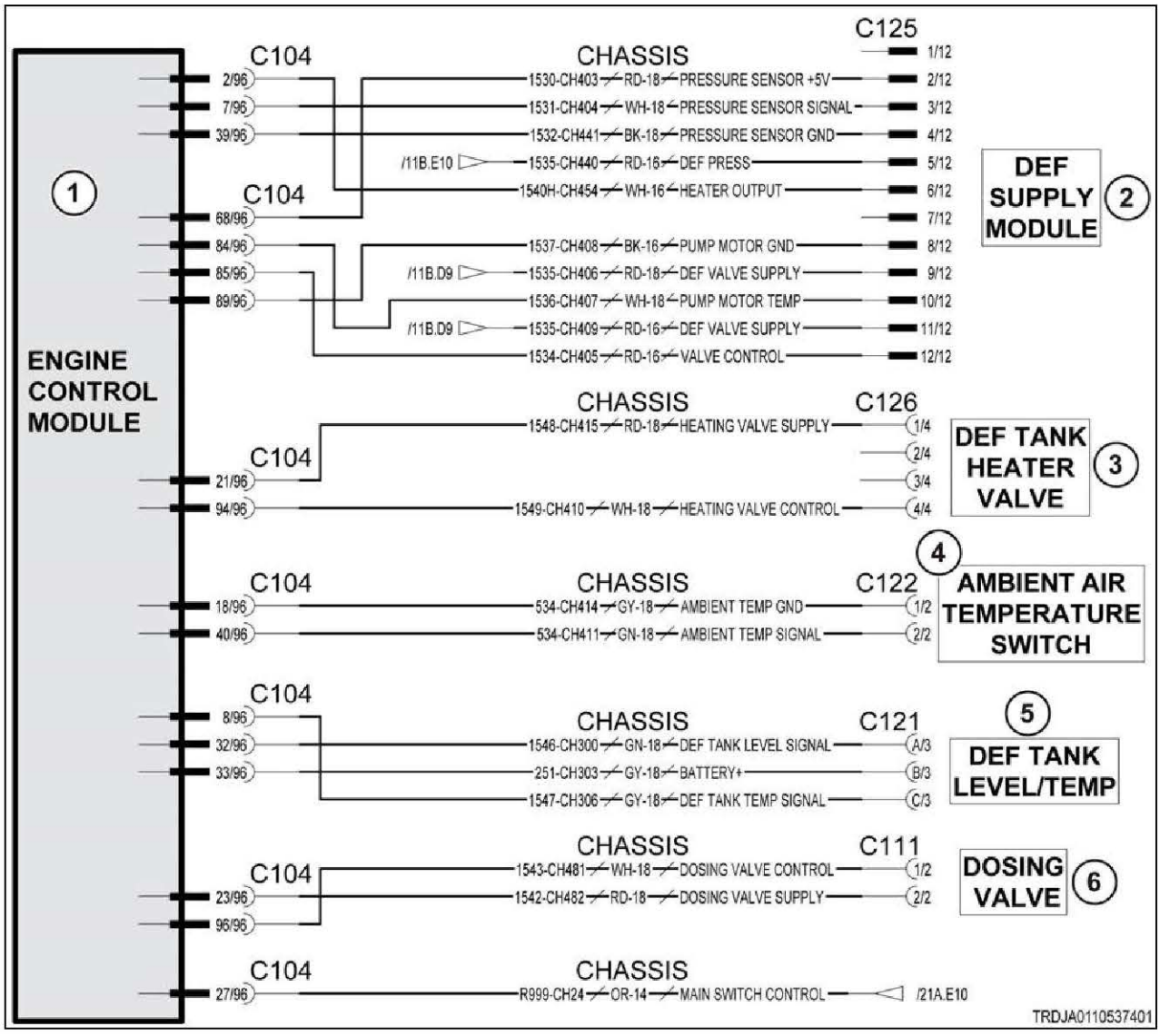

Fig. 70

Schematic legend		
Item	**Schematic term**	**Description**
1	ENGINE CONTROL MODULE	Engine module
2	DEF SUPPLY MODULE	DEF supply module
3	DEF TANK HEATER VALVE	DEF tank heater valve
4	AMBIENT AIR TEMPERATURE SWITCH	Ambient air temperature switch
5	DEF TANK LEVEL/TEMP	DEF tank level/temperature
6	DOSING VALVE	Dosing valve
--	DEF PRESS SENSOR GND	DEF pressure sensor ground
--	PUMP MOTOR GND	Pump motor ground
--	PUMP MOTOR TEMP	Pump motor temperature
--	AMBIENT TEMP GND	Ambient temperature ground

10.5.40 Code SA 00 SPN 4344 FMI 03

Short circuit on DEF supply module heater control circuit.

Diagnosis and solution

1. Clear the error log.
2. Restart the engine module.
3. If the fault code shows again during the next driving cycle, check the following.
4. Check the DEF supply module heater relay harness. Make sure the connections are good and the contacts are clean.
5. Replace the DEF supply module heater relay. If the system is correct and the fault code is not active, the original DEF supply module heater relay is bad.

10.5.40.1 DEF electrical schematic

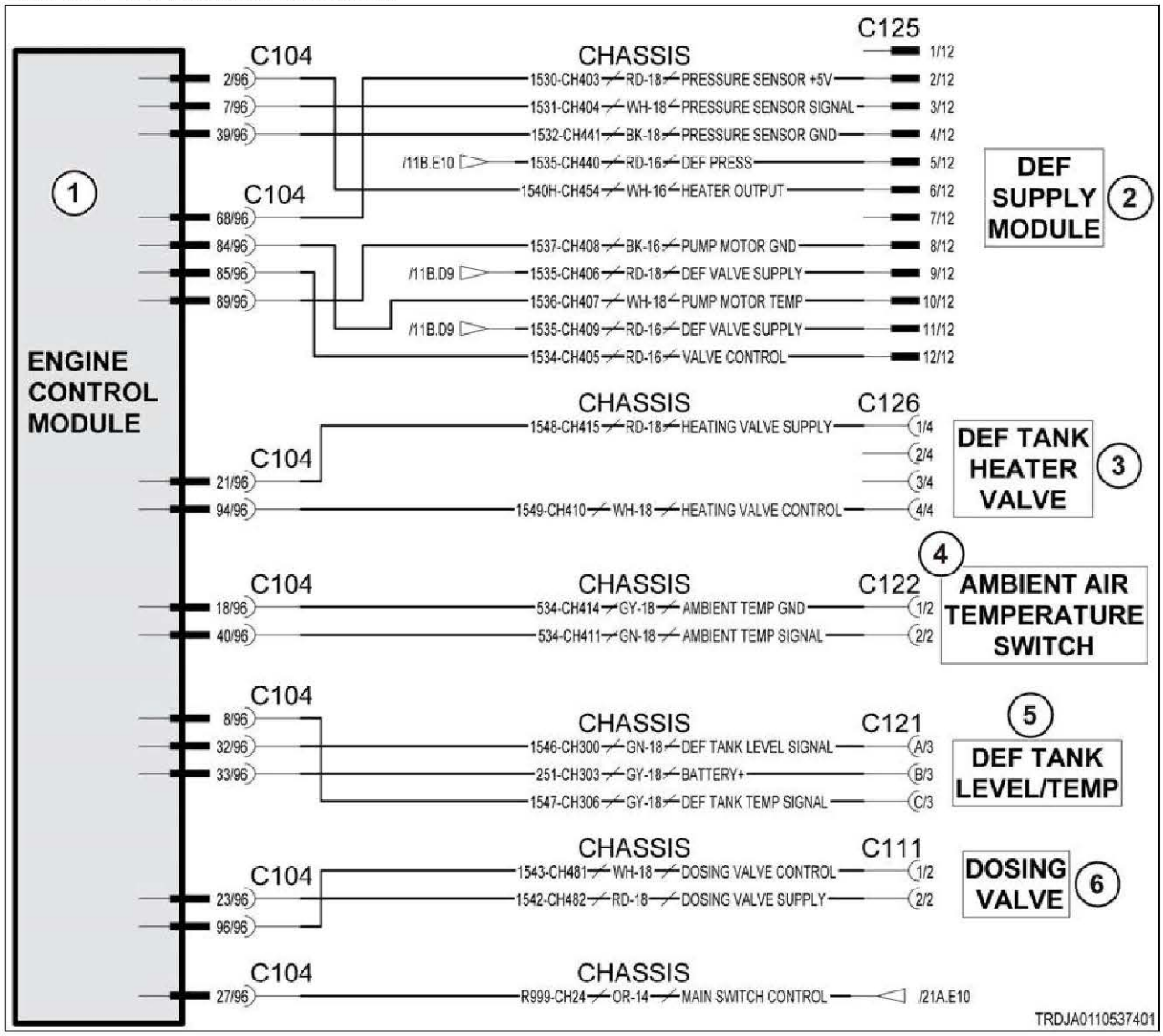

Fig. 71

Schematic legend		
Item	**Schematic term**	**Description**
1	ENGINE CONTROL MODULE	Engine module
2	DEF SUPPLY MODULE	DEF supply module
3	DEF TANK HEATER VALVE	DEF tank heater valve
4	AMBIENT AIR TEMPERATURE SWITCH	Ambient air temperature switch
5	DEF TANK LEVEL/TEMP	DEF tank level/temperature
6	DOSING VALVE	Dosing valve
--	DEF PRESS SENSOR GND	DEF pressure sensor ground
--	PUMP MOTOR GND	Pump motor ground
--	PUMP MOTOR TEMP	Pump motor temperature
--	AMBIENT TEMP GND	Ambient temperature ground

10.5.41 Code SA 00 SPN 4344 FMI 04

Short circuit on DEF supply module heater control circuit.

Diagnosis and solution

1. Clear the error log.
2. Restart the engine module.
3. If the fault code shows again during the next driving cycle, check the following.
4. Check the DEF supply module heater relay harness. Make sure the connections are good and the contacts are clean.
5. Replace the DEF supply module heater relay. If the system is correct and the fault code is not active, the original DEF supply module heater relay is bad.

10.5.41.1 DEF electrical schematic

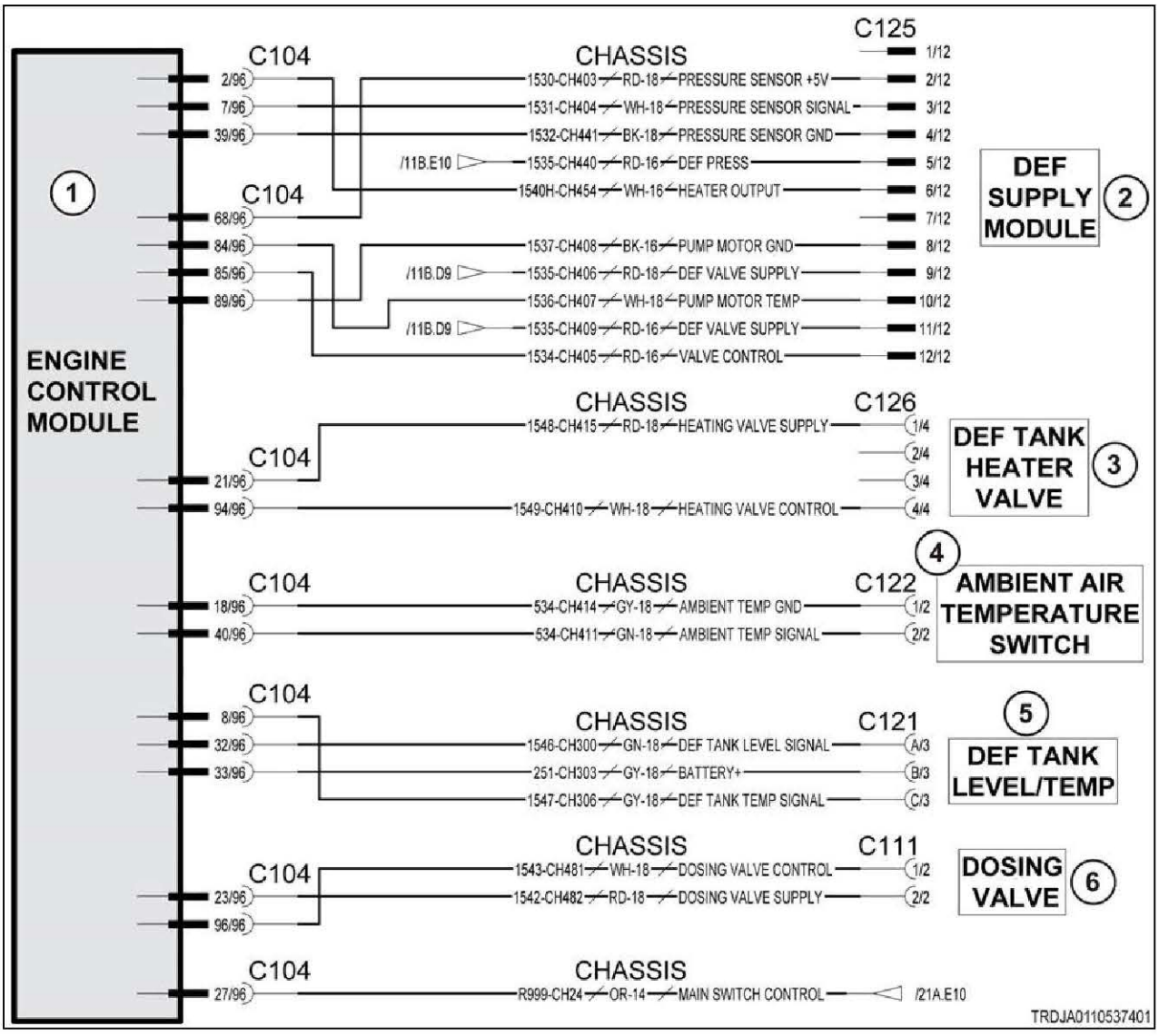

Fig. 72

Schematic legend		
Item	Schematic term	Description
1	ENGINE CONTROL MODULE	Engine module
2	DEF SUPPLY MODULE	DEF supply module
3	DEF TANK HEATER VALVE	DEF tank heater valve
4	AMBIENT AIR TEMPERATURE SWITCH	Ambient air temperature switch
5	DEF TANK LEVEL/TEMP	DEF tank level/temperature
6	DOSING VALVE	Dosing valve
--	DEF PRESS SENSOR GND	DEF pressure sensor ground
--	PUMP MOTOR GND	Pump motor ground
--	PUMP MOTOR TEMP	Pump motor temperature
--	AMBIENT TEMP GND	Ambient temperature ground

10.5.42 Code SA 00 SPN 4344 FMI 08

DEF supply module temperature signal is out of operating range.

Diagnosis and solution

1. Clear the error log.
2. Restart the engine module.
3. If the fault code shows again during the next driving cycle, check the following.
4. Check the DEF supply module harness. Make sure the connections are good and the contacts are clean.
5. Replace the DEF supply module. If the system is correct and the fault code is not active, the original DEF supply module is bad.

10.5.42.1 DEF electrical schematic

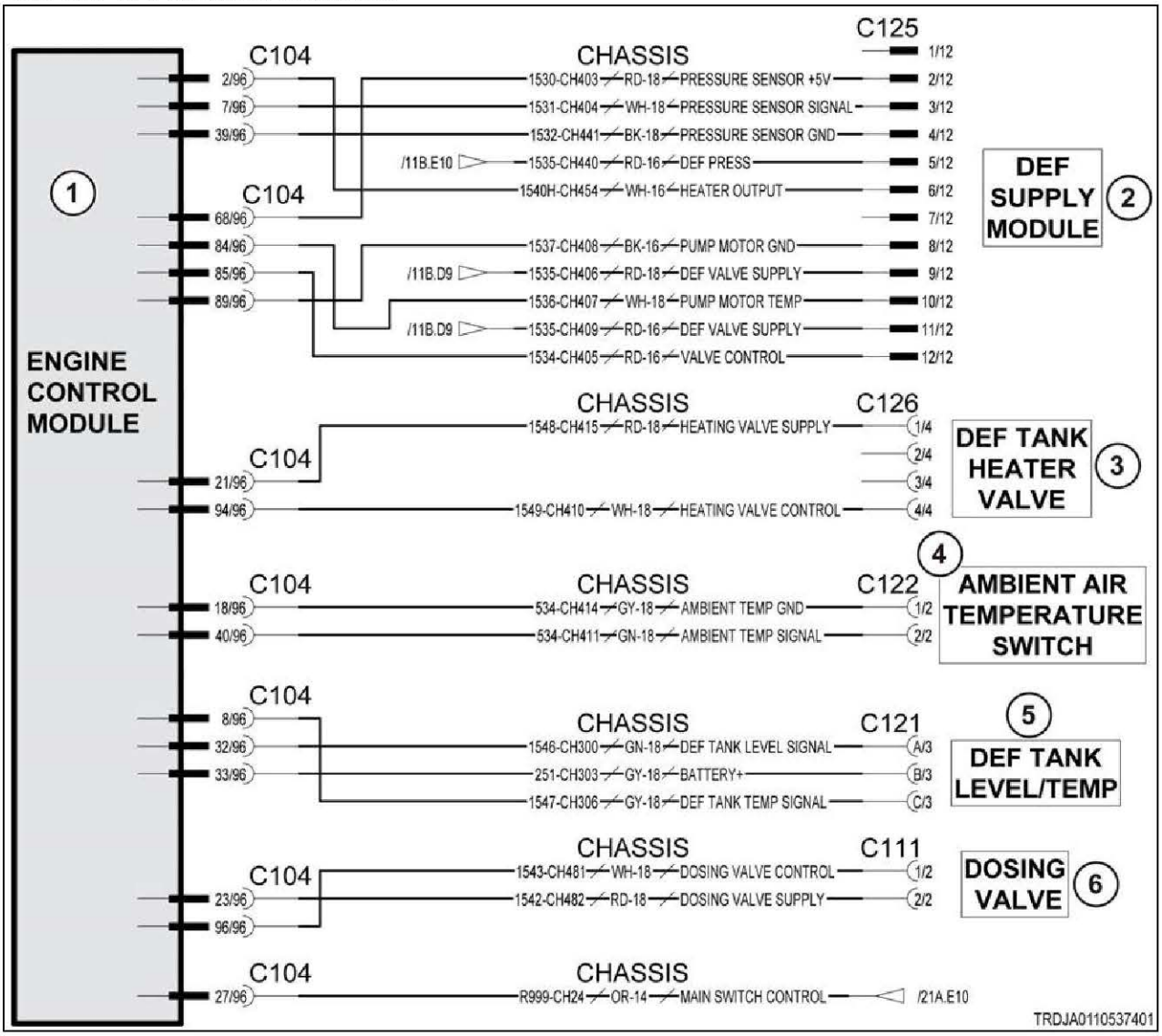

Fig. 73

Schematic legend		
Item	**Schematic term**	**Description**
1	ENGINE CONTROL MODULE	Engine module
2	DEF SUPPLY MODULE	DEF supply module
3	DEF TANK HEATER VALVE	DEF tank heater valve
4	AMBIENT AIR TEMPERATURE SWITCH	Ambient air temperature switch
5	DEF TANK LEVEL/TEMP	DEF tank level/temperature
6	DOSING VALVE	Dosing valve
--	DEF PRESS SENSOR GND	DEF pressure sensor ground
--	PUMP MOTOR GND	Pump motor ground
--	PUMP MOTOR TEMP	Pump motor temperature
--	AMBIENT TEMP GND	Ambient temperature ground

10.5.43 Code SA 00 SPN 4344 FMI 12

DEF supply module temperature module is not responding.

Diagnosis and solution

1. Clear the error log.
2. Restart the engine module.
3. If the fault code shows again during the next driving cycle, check the following.
4. Check the DEF supply module harness. Make sure the connections are good and the contacts are clean.
5. Replace the DEF supply module. If the system is correct and the fault code is not active, the original DEF supply module is bad.

10.5.43.1 DEF electrical schematic

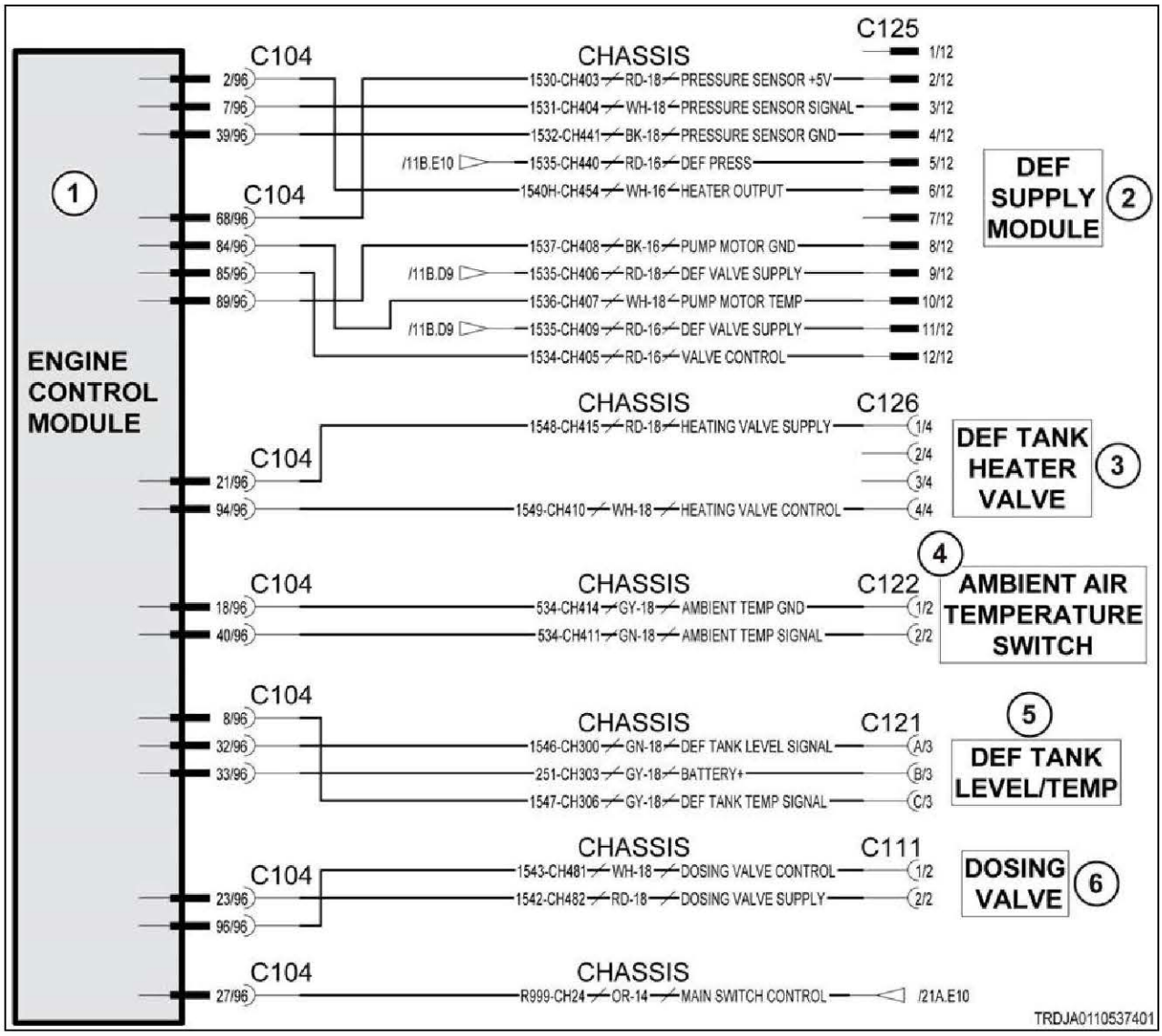

Fig. 74

Schematic legend		
Item	**Schematic term**	**Description**
1	ENGINE CONTROL MODULE	Engine module
2	DEF SUPPLY MODULE	DEF supply module
3	DEF TANK HEATER VALVE	DEF tank heater valve
4	AMBIENT AIR TEMPERATURE SWITCH	Ambient air temperature switch
5	DEF TANK LEVEL/TEMP	DEF tank level/temperature
6	DOSING VALVE	Dosing valve
--	DEF PRESS SENSOR GND	DEF pressure sensor ground
--	PUMP MOTOR GND	Pump motor ground
--	PUMP MOTOR TEMP	Pump motor temperature
--	AMBIENT TEMP GND	Ambient temperature ground

10.5.44 Code SA 00 SPN 4344 FMI 31

Over temperature on DEF supply module heater power stage.

Diagnosis and solution

1. Clear the error log.
2. Restart the engine module.
3. If the fault code shows again during the next driving cycle, check the following.
4. Check the DEF supply module heater relay harness. Make sure the connections are good and the contacts are clean.
5. Replace the DEF supply module heater relay. If the system is correct and the fault code is not active, the original DEF supply module heater relay is bad.
6. Replace the engine module. If the system is correct and the fault code is not active, the original engine module is bad.

10.5.44.1 DEF electrical schematic

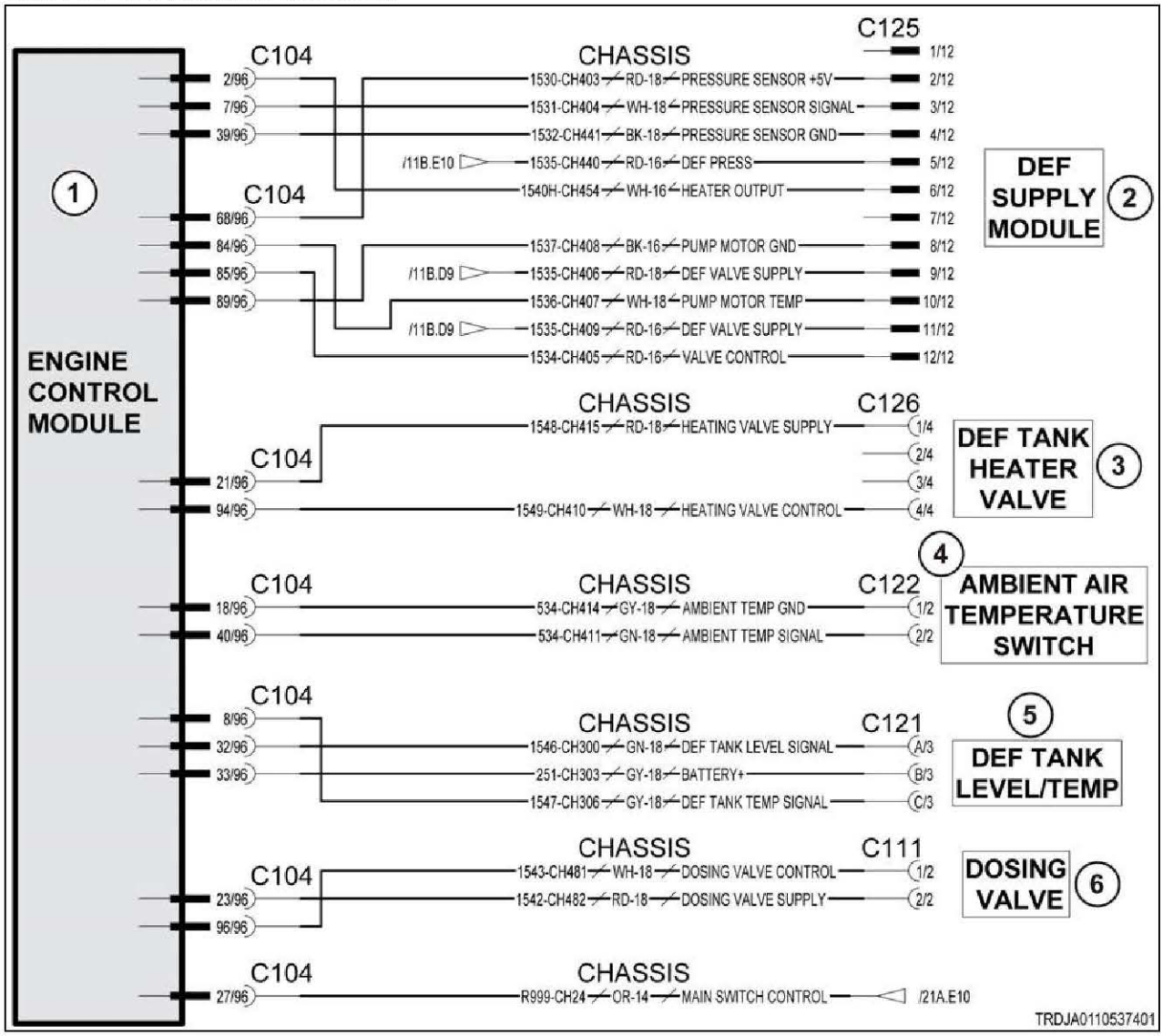

Fig. 75

Schematic legend		
Item	**Schematic term**	**Description**
1	ENGINE CONTROL MODULE	Engine module
2	DEF SUPPLY MODULE	DEF supply module
3	DEF TANK HEATER VALVE	DEF tank heater valve
4	AMBIENT AIR TEMPERATURE SWITCH	Ambient air temperature switch
5	DEF TANK LEVEL/TEMP	DEF tank level/temperature
6	DOSING VALVE	Dosing valve
--	DEF PRESS SENSOR GND	DEF pressure sensor ground
--	PUMP MOTOR GND	Pump motor ground
--	PUMP MOTOR TEMP	Pump motor temperature
--	AMBIENT TEMP GND	Ambient temperature ground

10.5.45 Code SA 00 SPN 4346 FMI 03

Short circuit on DEF pressure line heater control circuit.

Diagnosis and solution

1. Clear the error log.
2. Restart the engine module.
3. If the fault code shows again during the next driving cycle, check the following.
4. Check the DEF pressure line heater harness. Make sure the connections are good and the contacts are clean.
5. Replace the DEF pressure line heater relay. If the system is correct and the fault code is not active, the original DEF pressure line heater relay is bad.

10.5.45.1 DEF electrical schematic

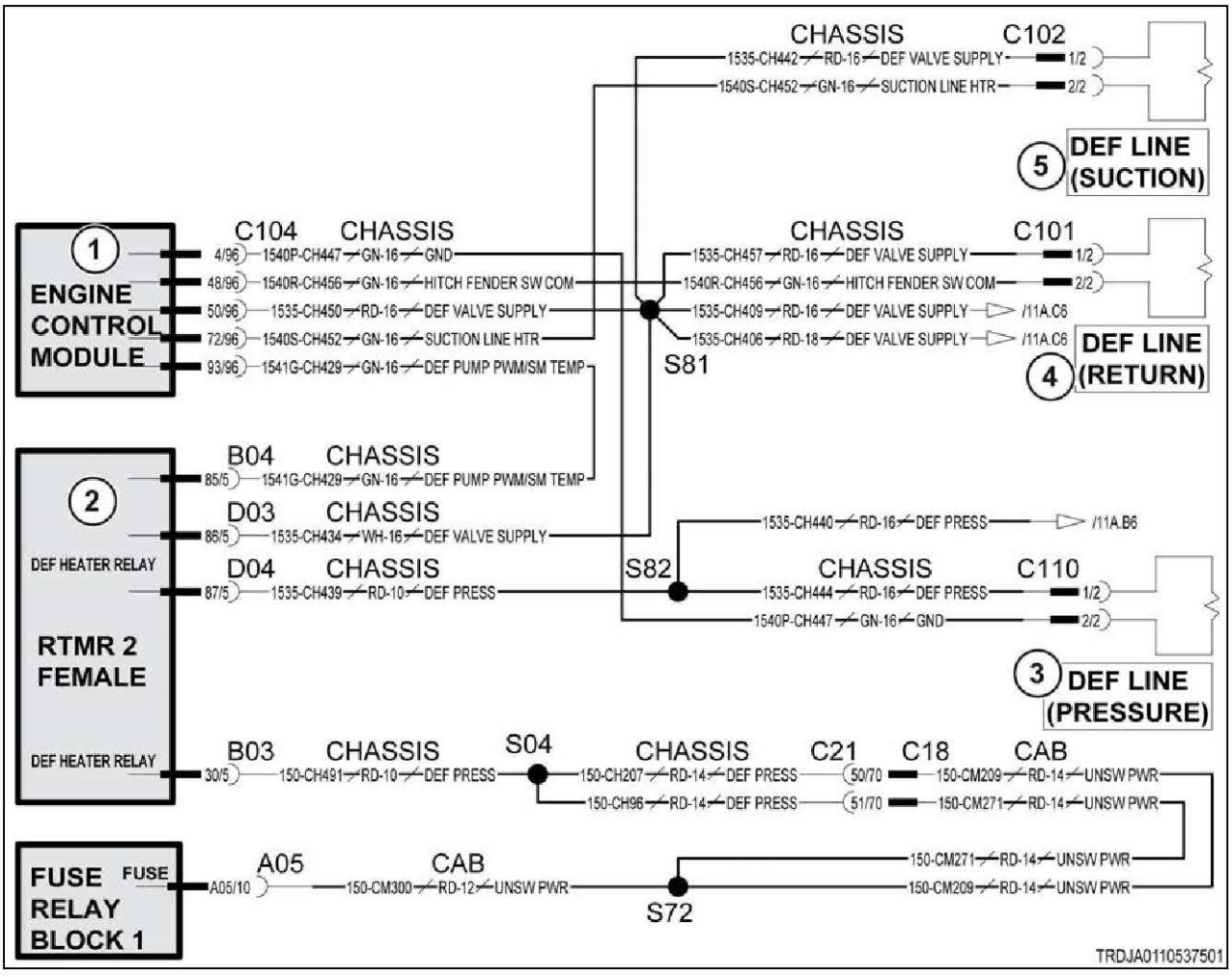

Fig. 76

Schematic legend		
Item	**Schematic term**	**Description**
1	ENGINE CONTROL MODULE	Engine module
2	RTMR 2 FEMALE	Rear terminal mini-fuse relay 2 female
3	DEF LINE (PRESSURE)	DEF pressure line

Schematic legend		
Item	**Schematic term**	**Description**
4	DEF LINE (RETURN)	DEF return line
5	DEF LINE (SUCTION)	DEF suction line
--	SUCTION LINE HTR	DEF suction line heater
--	HITCH FENDER SW COM	Hitch fender switch common
--	DEF PUMP PWM/SM TEMP	DEF pump pulse width modulation/supply module temperature
--	DEF PRESS	DEF pressure
--	UNSW PWR	Unswitched power

10.5.46 Code SA 00 SPN 4346 FMI 04

Short circuit on DEF pressure line heater control circuit.

Diagnosis and solution

1. Clear the error log.
2. Restart the engine module.
3. If the fault code shows again during the next driving cycle, check the following.
4. Check the DEF pressure line heater harness. Make sure the connections are good and the contacts are clean.
5. Replace the DEF pressure line heater relay. If the system is correct and the fault code is not active, the original DEF pressure line heater relay is bad.

10.5.46.1 DEF electrical schematic

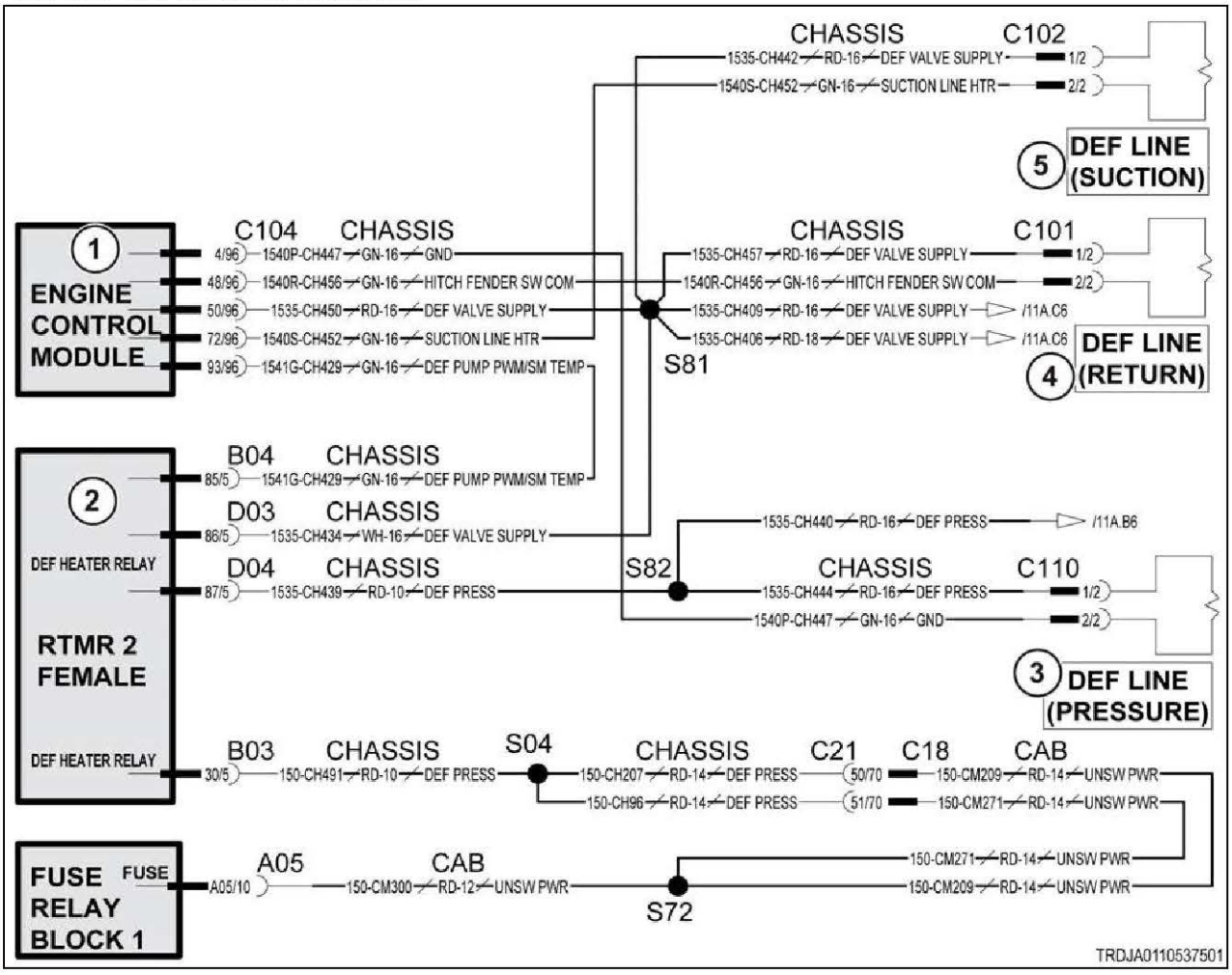

Fig. 77

Schematic legend		
Item	**Schematic term**	**Description**
1	ENGINE CONTROL MODULE	Engine module
2	RTMR 2 FEMALE	Rear terminal mini-fuse relay 2 female
3	DEF LINE (PRESSURE)	DEF pressure line
4	DEF LINE (RETURN)	DEF return line
5	DEF LINE (SUCTION)	DEF suction line
--	SUCTION LINE HTR	DEF suction line heater
--	HITCH FENDER SW COM	Hitch fender switch common
--	DEF PUMP PWM/SM TEMP	DEF pump pulse width modulation/supply module temperature
--	DEF PRESS	DEF pressure
--	UNSW PWR	Unswitched power

10.5.47 Code SA 00 SPN 4346 FMI 05

Open circuit on DEF pressure line heater control circuit.

Diagnosis and solution

1. Clear the error log.
2. Restart the engine module.
3. If the fault code shows again during the next driving cycle, check the following.
4. Check the DEF pressure line heater harness. Make sure the connections are good and the contacts are clean.
5. Replace the DEF pressure line heater relay. If the system is correct and the fault code is not active, the original DEF pressure line heater relay is bad.

10.5.47.1 DEF electrical schematic

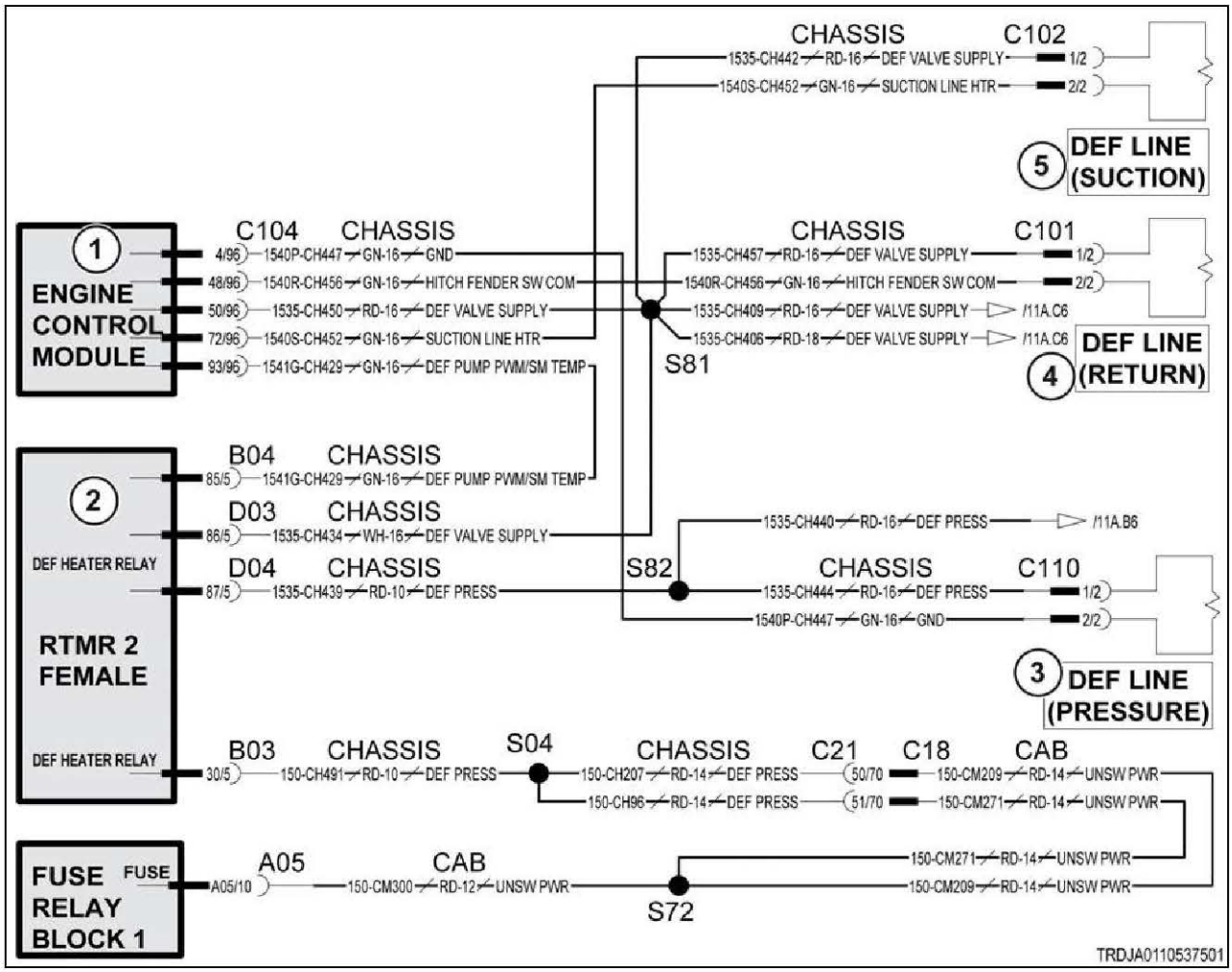

Fig. 78

Schematic legend		
Item	**Schematic term**	**Description**
1	ENGINE CONTROL MODULE	Engine module
2	RTMR 2 FEMALE	Rear terminal mini-fuse relay 2 female
3	DEF LINE (PRESSURE)	DEF pressure line

Schematic legend		
Item	Schematic term	Description
4	DEF LINE (RETURN)	DEF return line
5	DEF LINE (SUCTION)	DEF suction line
--	SUCTION LINE HTR	DEF suction line heater
--	HITCH FENDER SW COM	Hitch fender switch common
--	DEF PUMP PWM/SM TEMP	DEF pump pulse width modulation/supply module temperature
--	DEF PRESS	DEF pressure
--	UNSW PWR	Unswitched power

10.5.48 Code SA 00 SPN 4346 FMI 31

Over temperature on DEF pressure line heater relay.

Diagnosis and solution

1. Clear the error log.
2. Restart the engine module.
3. If the fault code shows again during the next driving cycle, check the following.
4. Check the DEF pressure line heater harness. Make sure the connections are good and the contacts are clean.
5. Replace the DEF pressure line heater relay. If the system is correct and the fault code is not active, the original DEF pressure line heater relay is bad.
6. Replace the engine module. If the system is correct and the fault code is not active, the original engine module is bad.

10.5.48.1 DEF electrical schematic

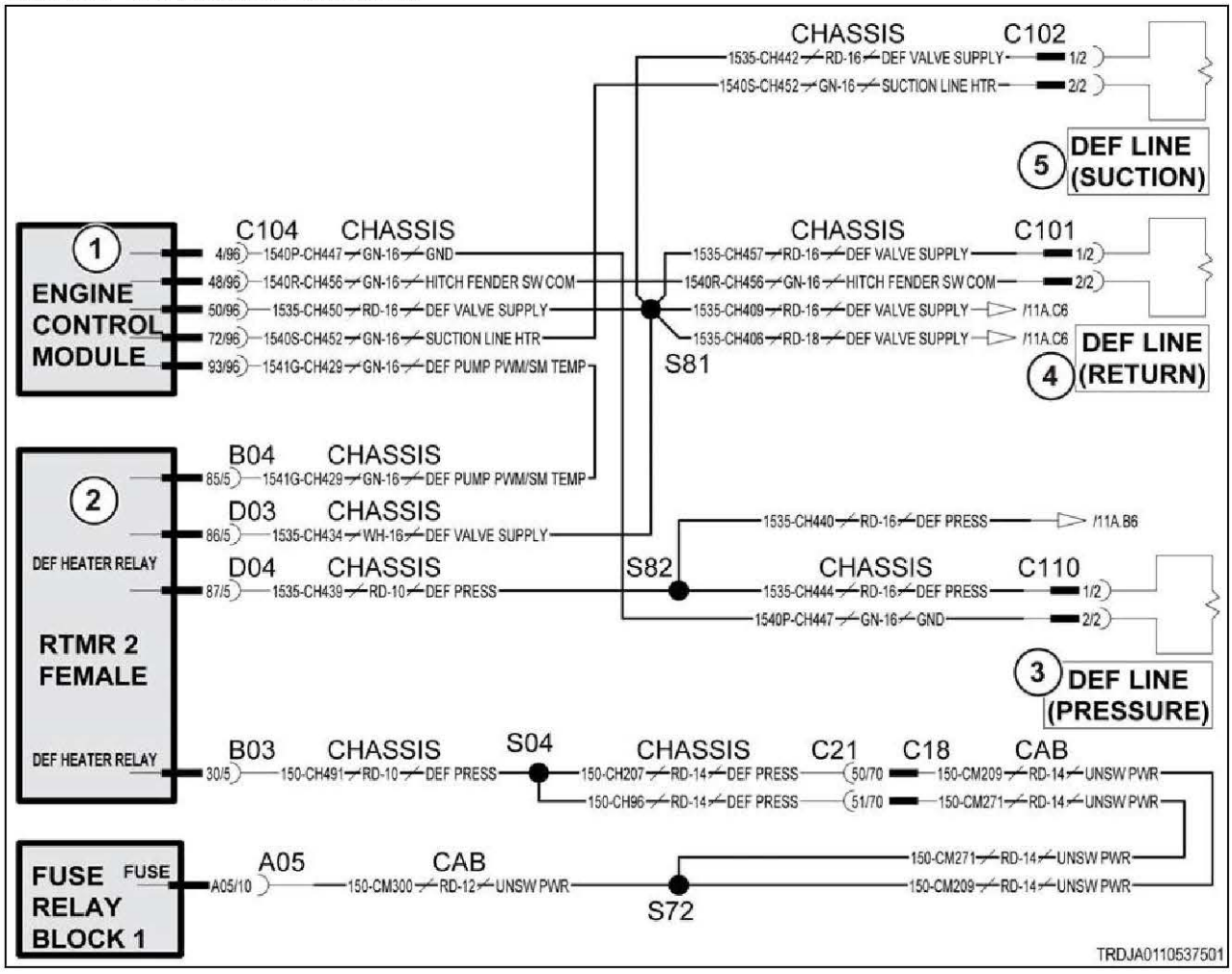

Fig. 79

Schematic legend		
Item	**Schematic term**	**Description**
1	ENGINE CONTROL MODULE	Engine module
2	RTMR 2 FEMALE	Rear terminal mini-fuse relay 2 female
3	DEF LINE (PRESSURE)	DEF pressure line
4	DEF LINE (RETURN)	DEF return line
5	DEF LINE (SUCTION)	DEF suction line
--	SUCTION LINE HTR	DEF suction line heater
--	HITCH FENDER SW COM	Hitch fender switch common
--	DEF PUMP PWM/SM TEMP	DEF pump pulse width modulation/supply module temperature
--	DEF PRESS	DEF pressure
--	UNSW PWR	Unswitched power

10.5.49 Code SA 00 SPN 4354 FMI 03

Open circuit on DEF suction line heater relay.

Diagnosis and solution

1. Clear the error log.
2. Restart the engine module.
3. If the fault code shows again during the next driving cycle, check the following.
4. Check the DEF suction line heater harness. Make sure the connections are good and the contacts are clean.
5. Replace the DEF suction line heater relay. If the system is correct and the fault code is not active, the original DEF suction line heater relay is bad.

10.5.49.1 DEF electrical schematic

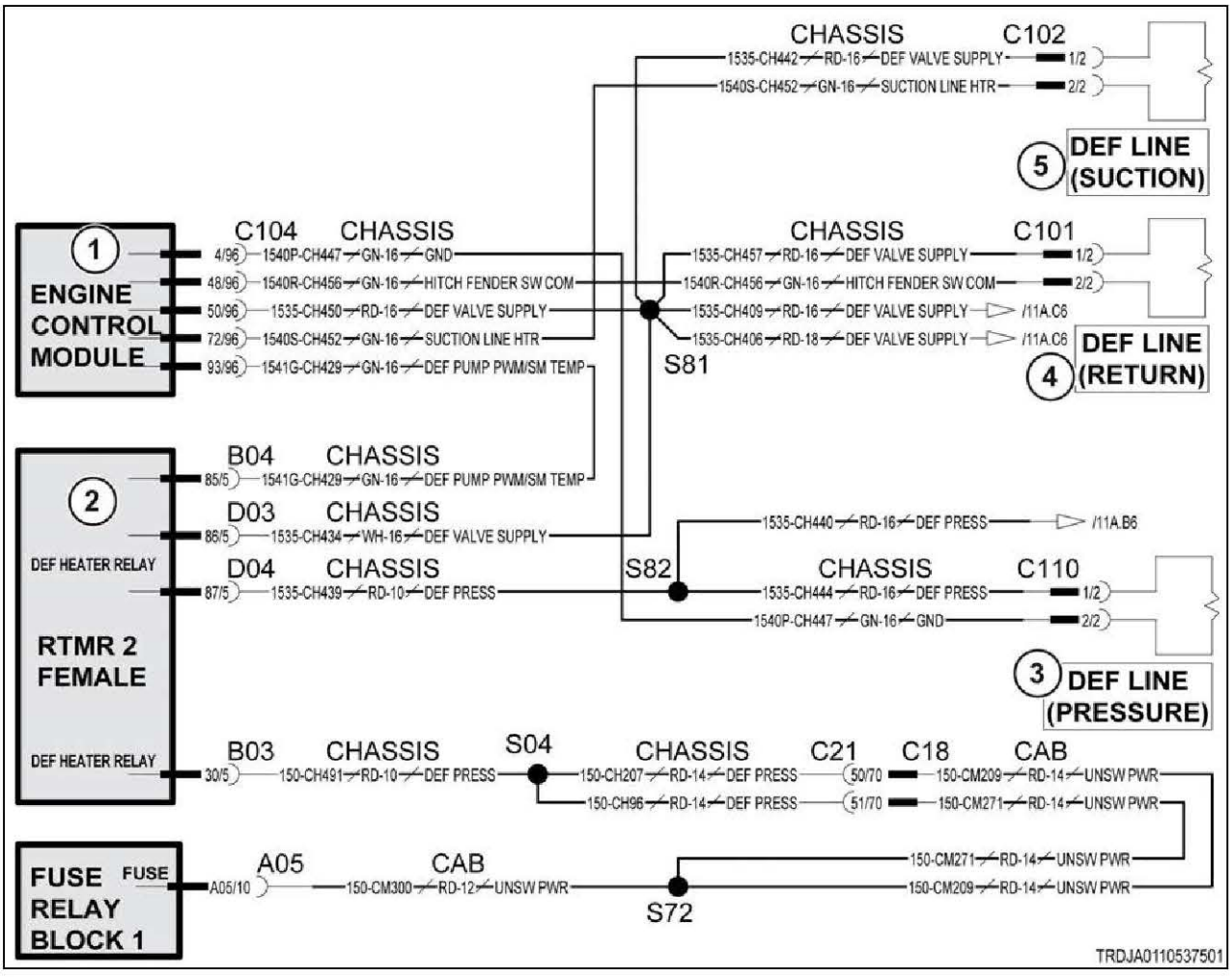

Fig. 80

Schematic legend		
Item	**Schematic term**	**Description**
1	ENGINE CONTROL MODULE	Engine module
2	RTMR 2 FEMALE	Rear terminal mini-fuse relay 2 female
3	DEF LINE (PRESSURE)	DEF pressure line

Schematic legend		
Item	Schematic term	Description
4	DEF LINE (RETURN)	DEF return line
5	DEF LINE (SUCTION)	DEF suction line
--	SUCTION LINE HTR	DEF suction line heater
--	HITCH FENDER SW COM	Hitch fender switch common
--	DEF PUMP PWM/SM TEMP	DEF pump pulse width modulation/supply module temperature
--	DEF PRESS	DEF pressure
--	UNSW PWR	Unswitched power

10.5.50 Code SA 00 SPN 4354 FMI 04

Open circuit on DEF suction line heater main relay.

Diagnosis and solution

1. Clear the error log.
2. Restart the engine module.
3. If the fault code shows again during the next driving cycle, check the following.
4. Check the DEF suction line heater harness. Make sure the connections are good and the contacts are clean.
5. Make sure the cable from the DEF suction line heater to the engine module is good.
6. Replace the DEF suction line heater relay. If the system is correct and the fault code is not active, the original DEF suction line heater relay is bad.
7. Replace the engine module. If the system is correct and the fault code is not active, the original engine module is bad.

10.5.50.1 DEF electrical schematic

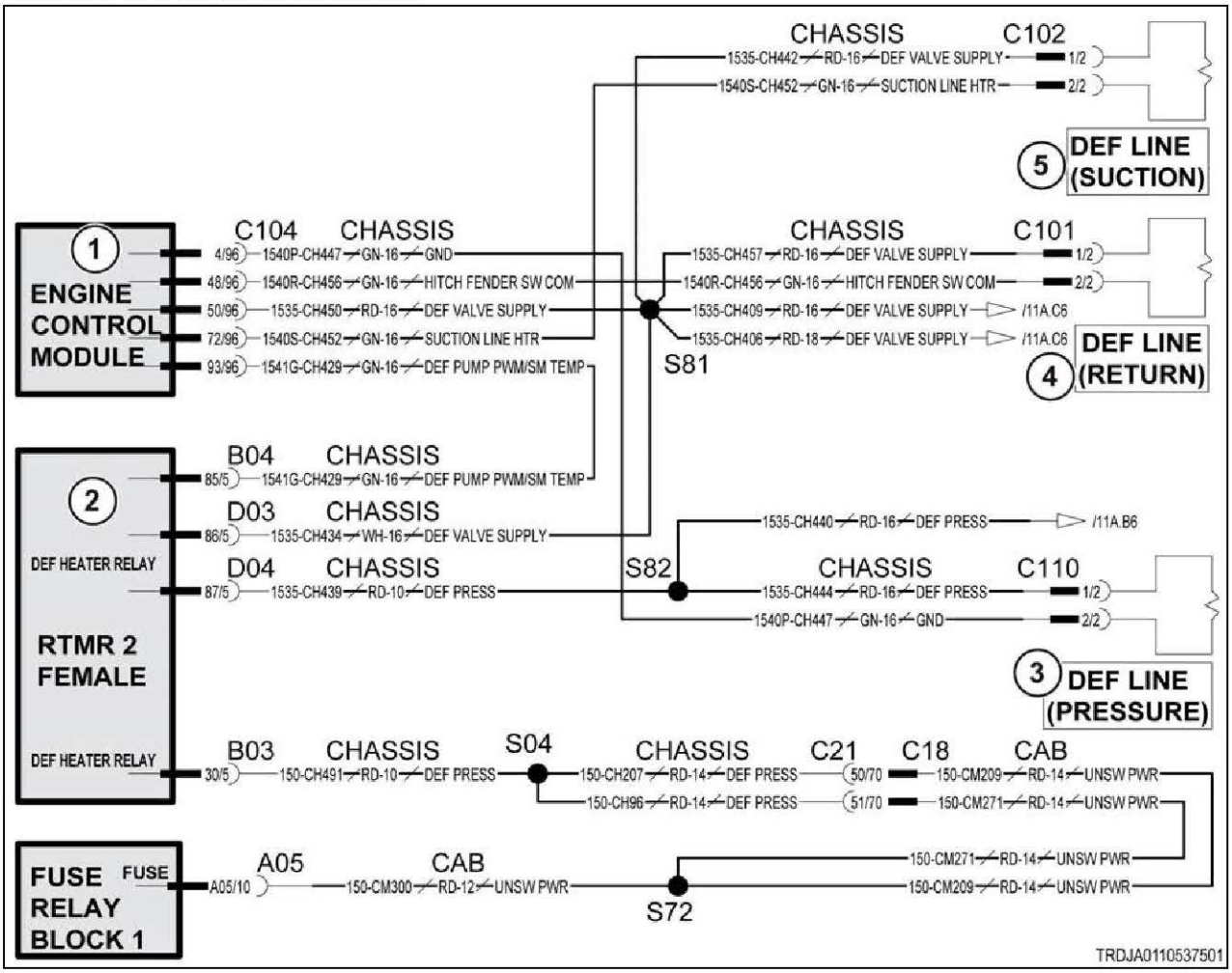

Fig. 81

Schematic legend		
Item	**Schematic term**	**Description**
1	ENGINE CONTROL MODULE	Engine module
2	RTMR 2 FEMALE	Rear terminal mini-fuse relay 2 female
3	DEF LINE (PRESSURE)	DEF pressure line
4	DEF LINE (RETURN)	DEF return line
5	DEF LINE (SUCTION)	DEF suction line
--	SUCTION LINE HTR	DEF suction line heater
--	HITCH FENDER SW COM	Hitch fender switch common
--	DEF PUMP PWM/SM TEMP	DEF pump pulse width modulation/supply module temperature
--	DEF PRESS	DEF pressure
--	UNSW PWR	Unswitched power

10.5.51 Code SA 00 SPN 4355 FMI 03

Open circuit on DEF backflow line heater relay low side.

Diagnosis and solution

1. Clear the error log.
2. Restart the engine module.
3. If the fault code shows again during the next driving cycle, check the following.
4. Check the DEF backflow line heater harness. Make sure the connections are good and the contacts are clean.
5. Replace the DEF backflow line heater relay. If the system is correct and the fault code is not active, the original DEF backflow line heater relay is bad.

10.5.51.1 DEF electrical schematic

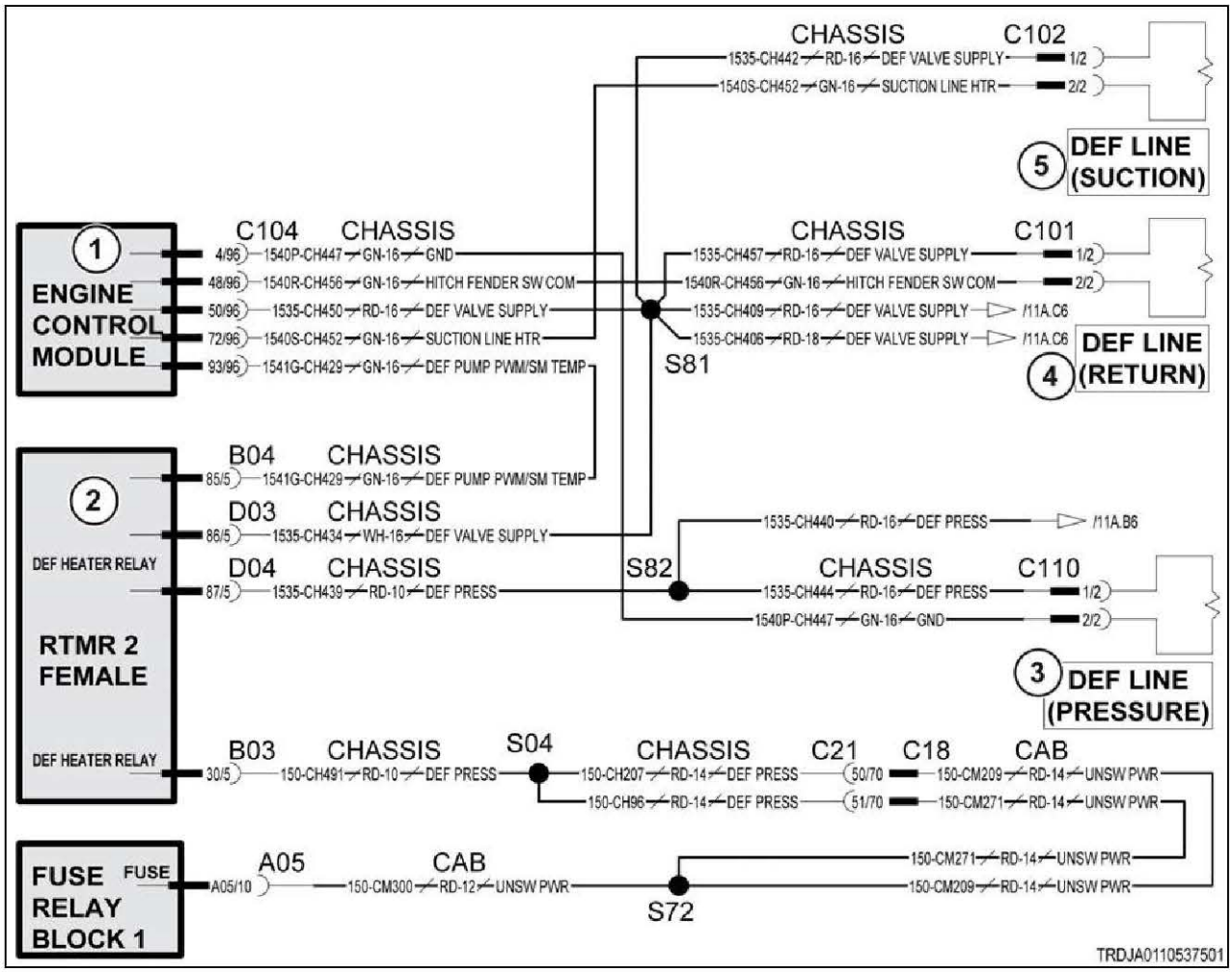

Fig. 82

Schematic legend		
Item	**Schematic term**	**Description**
1	ENGINE CONTROL MODULE	Engine module
2	RTMR 2 FEMALE	Rear terminal mini-fuse relay 2 female
3	DEF LINE (PRESSURE)	DEF pressure line

Schematic legend		
Item	**Schematic term**	**Description**
4	DEF LINE (RETURN)	DEF return line
5	DEF LINE (SUCTION)	DEF suction line
--	SUCTION LINE HTR	DEF suction line heater
--	HITCH FENDER SW COM	Hitch fender switch common
--	DEF PUMP PWM/SM TEMP	DEF pump pulse width modulation/supply module temperature
--	DEF PRESS	DEF pressure
--	UNSW PWR	Unswitched power

10.5.52 Code SA 00 SPN 4355 FMI 04

Open circuit on DEF backflow line heater relay high side.

Diagnosis and solution

1. Clear the error log.
2. Restart the engine module.
3. If the fault code shows again during the next driving cycle, check the following.
4. Check the DEF backflow line heater harness. Make sure the connections are good and the contacts are clean.
5. Make sure the cable from the DEF backflow line heater to the engine module is good.
6. Replace the DEF backflow line heater relay. If the system is correct and the fault code is not active, the original DEF backflow line heater relay is bad.
7. Replace the engine module. If the system is correct and the fault code is not active, the original engine module is bad.

10.5.52.1 DEF electrical schematic

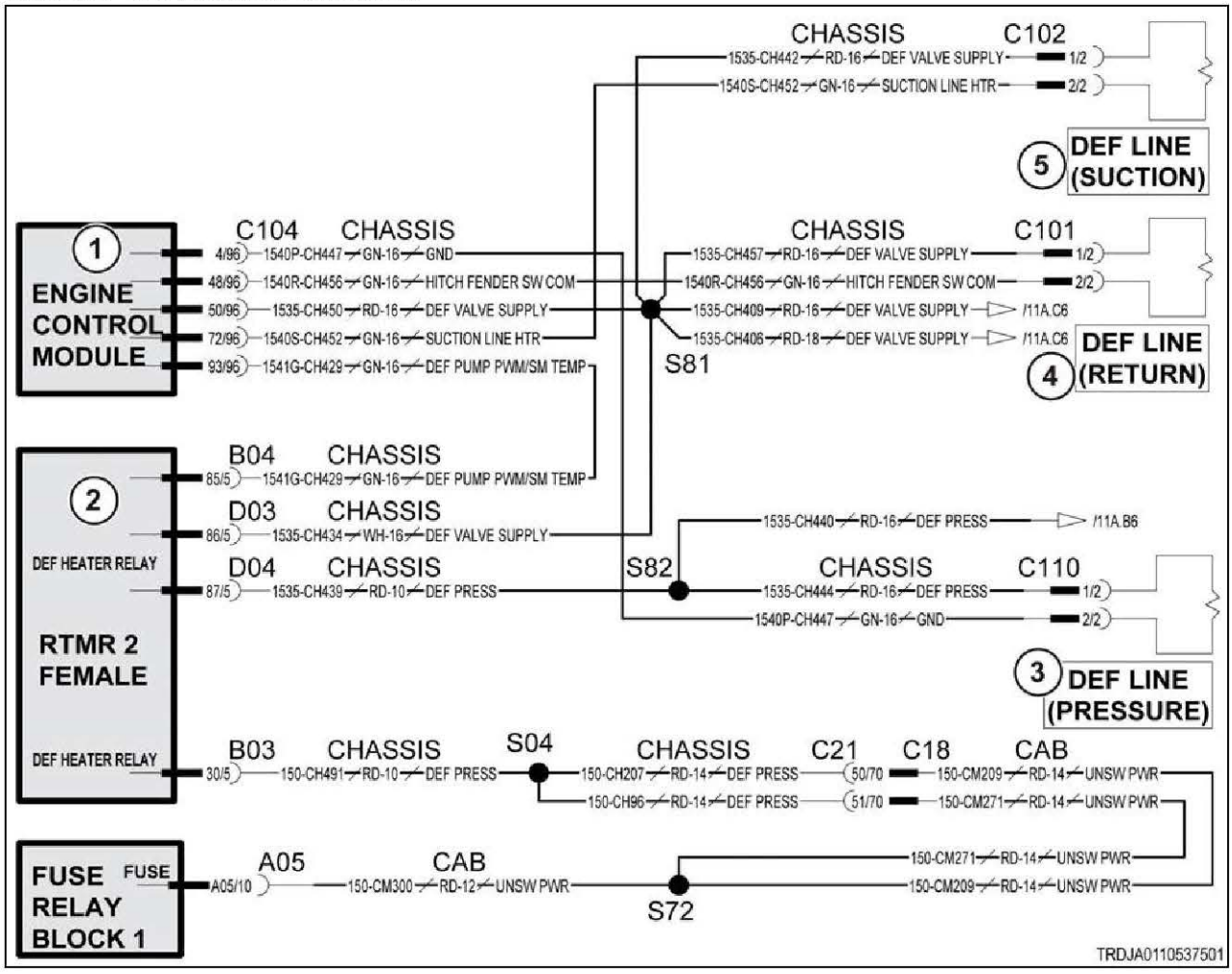

Fig. 83

Schematic legend		
Item	**Schematic term**	**Description**
1	ENGINE CONTROL MODULE	Engine module
2	RTMR 2 FEMALE	Rear terminal mini-fuse relay 2 female
3	DEF LINE (PRESSURE)	DEF pressure line
4	DEF LINE (RETURN)	DEF return line
5	DEF LINE (SUCTION)	DEF suction line
--	SUCTION LINE HTR	DEF suction line heater
--	HITCH FENDER SW COM	Hitch fender switch common
--	DEF PUMP PWM/SM TEMP	DEF pump pulse width modulation/supply module temperature
--	DEF PRESS	DEF pressure
--	UNSW PWR	Unswitched power

10.5.53 Code SA 00 SPN 4356 FMI 03

Open circuit on DEF supply module heater relay low side.

Diagnosis and solution

1. Clear the error log.
2. Restart the engine module.
3. If the fault code shows again during the next driving cycle, check the following.
4. Check the DEF supply module heater harness. Make sure the connections are good and the contacts are clean.
5. Replace the DEF supply module heater relay. If the system is correct and the fault code is not active, the original DEF supply module heater relay is bad.

10.5.53.1 DEF electrical schematic

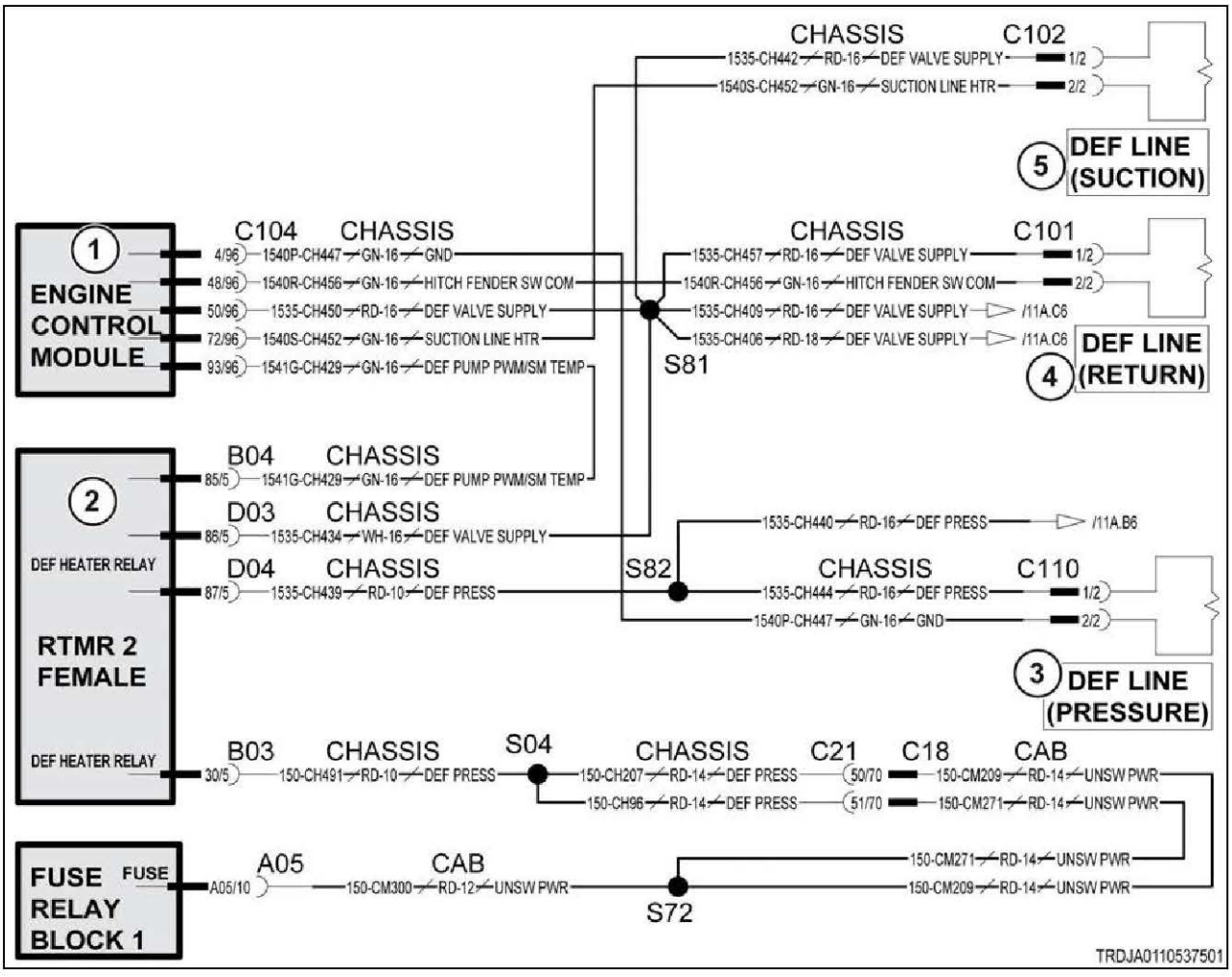

Fig. 84

Schematic legend		
Item	**Schematic term**	**Description**
1	ENGINE CONTROL MODULE	Engine module
2	RTMR 2 FEMALE	Rear terminal mini-fuse relay 2 female
3	DEF LINE (PRESSURE)	DEF pressure line

Schematic legend		
Item	Schematic term	Description
4	DEF LINE (RETURN)	DEF return line
5	DEF LINE (SUCTION)	DEF suction line
--	SUCTION LINE HTR	DEF suction line heater
--	HITCH FENDER SW COM	Hitch fender switch common
--	DEF PUMP PWM/SM TEMP	DEF pump pulse width modulation/supply module temperature
--	DEF PRESS	DEF pressure
--	UNSW PWR	Unswitched power

10.5.54 Code SA 00 SPN 4356 FMI 04

Open circuit on DEF supply module heater relay high side.

Diagnosis and solution

1. Clear the error log.
2. Restart the engine module.
3. If the fault code shows again during the next driving cycle, check the following.
4. Check the DEF supply module heater harness. Make sure the connections are good and the contacts are clean.
5. Make sure the cable from the DEF supply module heater to the engine module is good.
6. Replace the DEF supply module heater relay. If the system is correct and the fault code is not active, the original DEF supply module heater relay is bad.

10.5.54.1 DEF electrical schematic

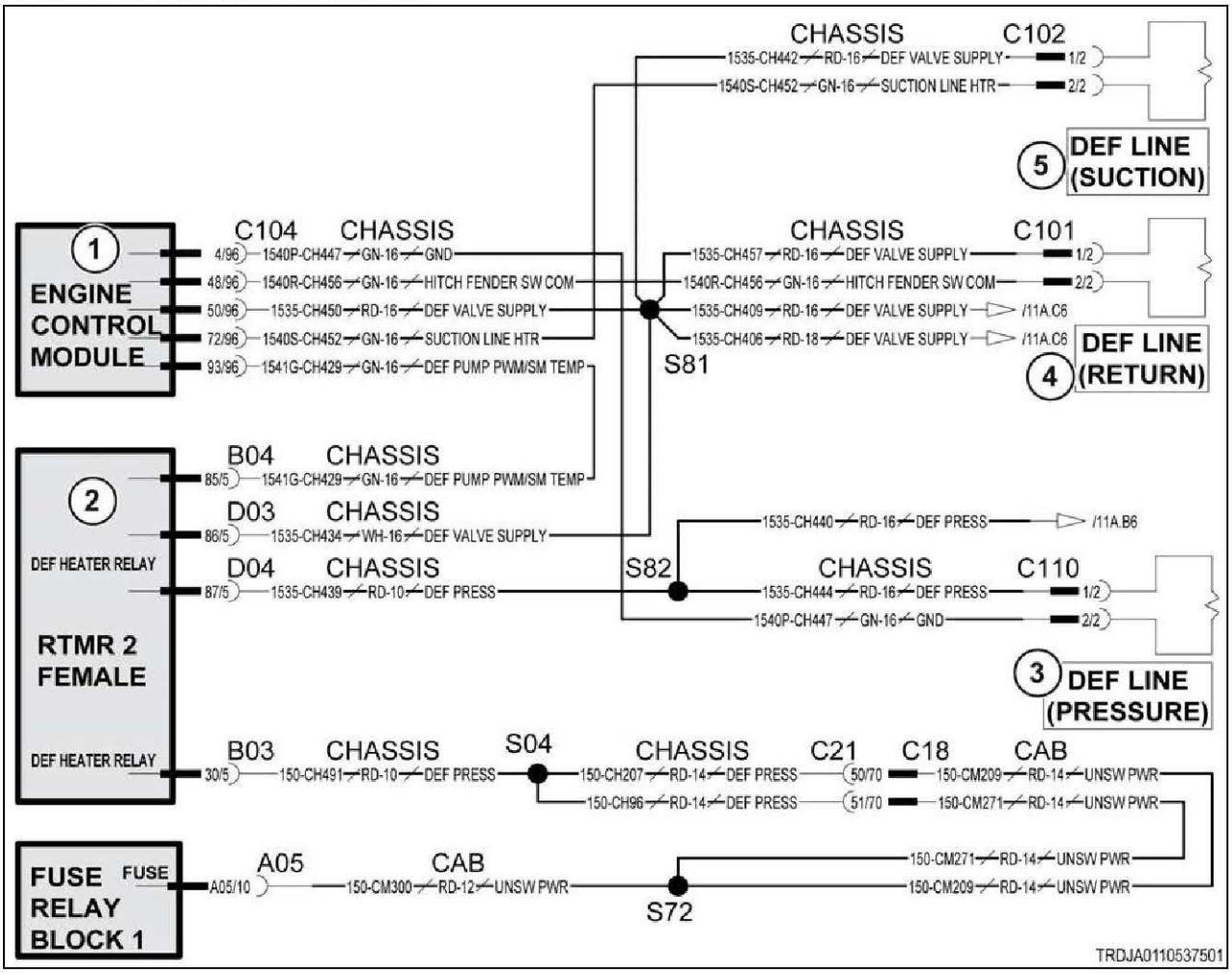

Fig. 85

Schematic legend		
Item	**Schematic term**	**Description**
1	ENGINE CONTROL MODULE	Engine module
2	RTMR 2 FEMALE	Rear terminal mini-fuse relay 2 female
3	DEF LINE (PRESSURE)	DEF pressure line
4	DEF LINE (RETURN)	DEF return line
5	DEF LINE (SUCTION)	DEF suction line
--	SUCTION LINE HTR	DEF suction line heater
--	HITCH FENDER SW COM	Hitch fender switch common
--	DEF PUMP PWM/SM TEMP	DEF pump pulse width modulation/supply module temperature
--	DEF PRESS	DEF pressure
--	UNSW PWR	Unswitched power

10.5.55 Code SA 00 SPN 4356 FMI 05

Open circuit on DEF supply module heater relay.

Diagnosis and solution

1. Clear the error log.
2. Restart the engine module.
3. If the fault code shows again during the next driving cycle, check the following.
4. Check the DEF supply module heater harness. Make sure the connections are good and the contacts are clean.
5. Replace the DEF supply module heater relay. If the system is correct and the fault code is not active, the original DEF supply module heater relay is bad.

10.5.55.1 DEF electrical schematic

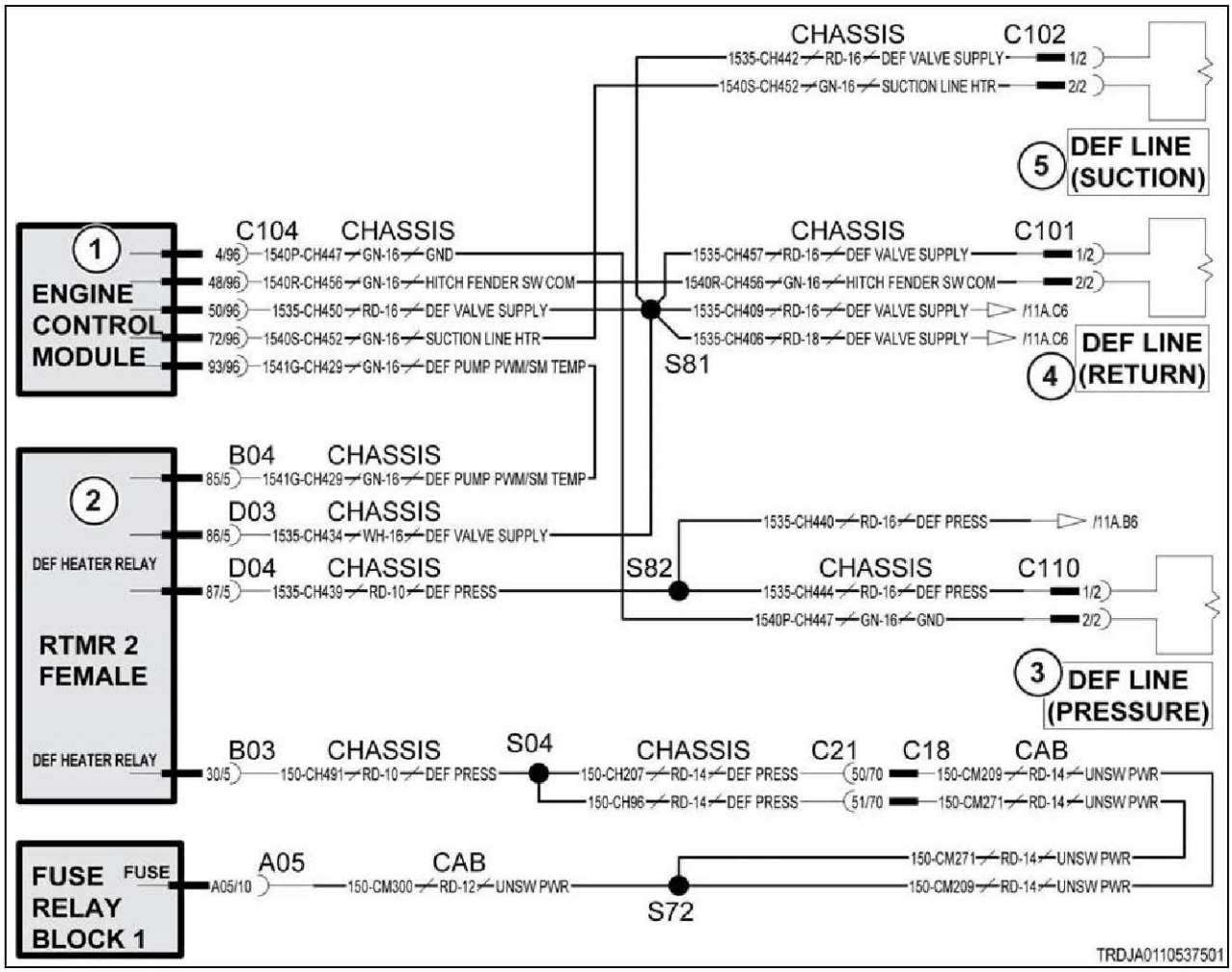

Fig. 86

Schematic legend		
Item	**Schematic term**	**Description**
1	ENGINE CONTROL MODULE	Engine module
2	RTMR 2 FEMALE	Rear terminal mini-fuse relay 2 female
3	DEF LINE (PRESSURE)	DEF pressure line

Schematic legend		
Item	Schematic term	Description
4	DEF LINE (RETURN)	DEF return line
5	DEF LINE (SUCTION)	DEF suction line
--	SUCTION LINE HTR	DEF suction line heater
--	HITCH FENDER SW COM	Hitch fender switch common
--	DEF PUMP PWM/SM TEMP	DEF pump pulse width modulation/supply module temperature
--	DEF PRESS	DEF pressure
--	UNSW PWR	Unswitched power

10.5.56 Code SA 00 SPN 4357 FMI 03

Open circuit on DEF pressure line heater relay.

Diagnosis and solution

1. Clear the error log.
2. Restart the engine module.
3. If the fault code shows again during the next driving cycle, check the following.
4. Check the DEF pressure line heater relay harness. Make sure the connections are good and the contacts are clean.
5. Replace the DEF pressure line heater relay. If the system is correct and the fault code is not active, the original DEF pressure line heater relay is bad.

10.5.56.1 DEF electrical schematic

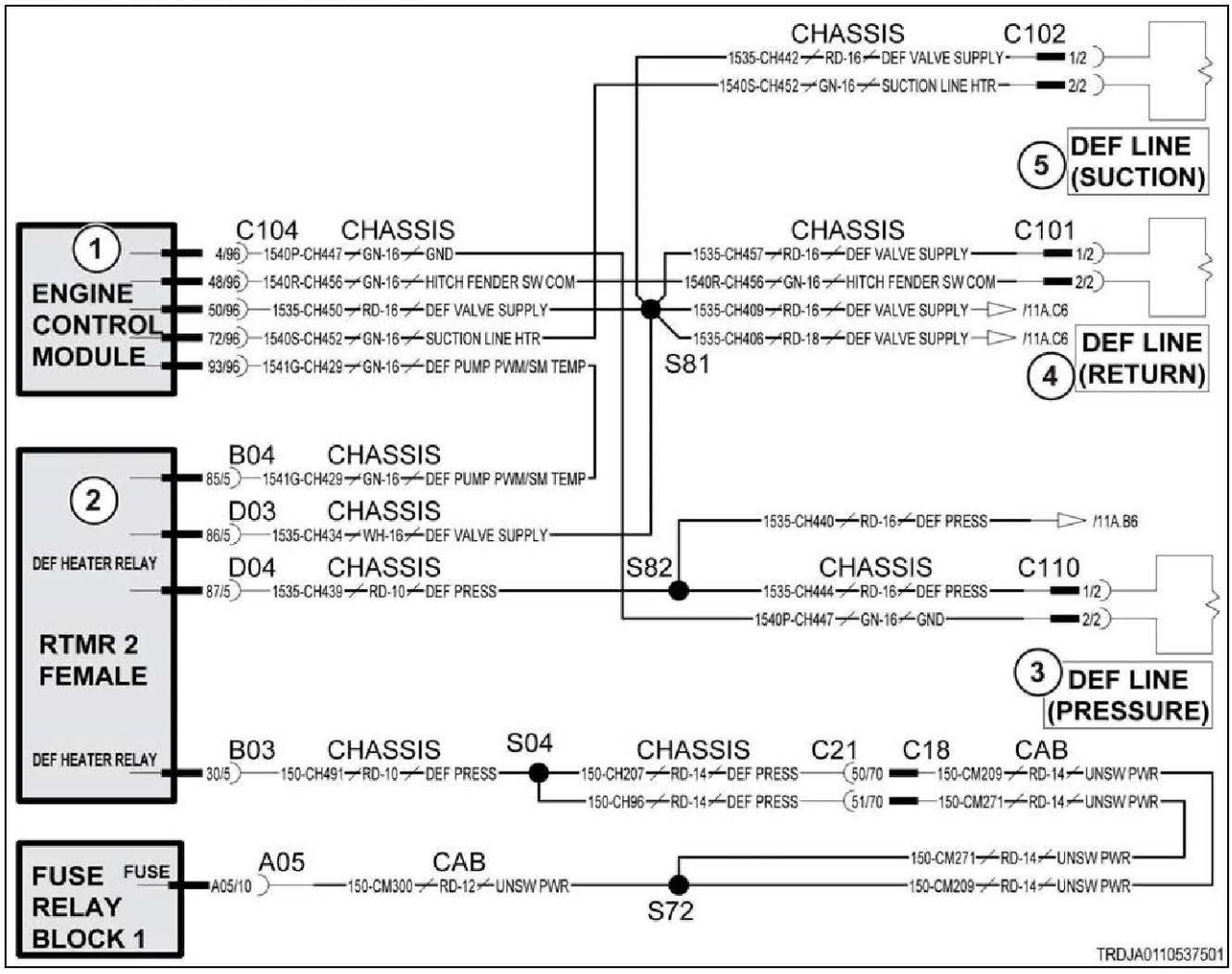

Fig. 87

Schematic legend		
Item	**Schematic term**	**Description**
1	ENGINE CONTROL MODULE	Engine module
2	RTMR 2 FEMALE	Rear terminal mini-fuse relay 2 female
3	DEF LINE (PRESSURE)	DEF pressure line
4	DEF LINE (RETURN)	DEF return line
5	DEF LINE (SUCTION)	DEF suction line
--	SUCTION LINE HTR	DEF suction line heater
--	HITCH FENDER SW COM	Hitch fender switch common
--	DEF PUMP PWM/SM TEMP	DEF pump pulse width modulation/supply module temperature
--	DEF PRESS	DEF pressure
--	UNSW PWR	Unswitched power

10.5.57 Code SA 00 SPN 4357 FMI 04

Open circuit on DEF pressure line heater relay.

Diagnosis and solution

1. Clear the error log.
2. Restart the engine module.
3. If the fault code shows again during the next driving cycle, check the following.
4. Check the DEF pressure line heater relay harness. Make sure the connections are good and the contacts are clean.
5. Make sure the cable from the DEF pressure line heater to the engine module is good
6. Replace the DEF pressure line heater relay. If the system is correct and the fault code is not active, the original DEF pressure line heater relay is bad.

10.5.57.1 DEF electrical schematic

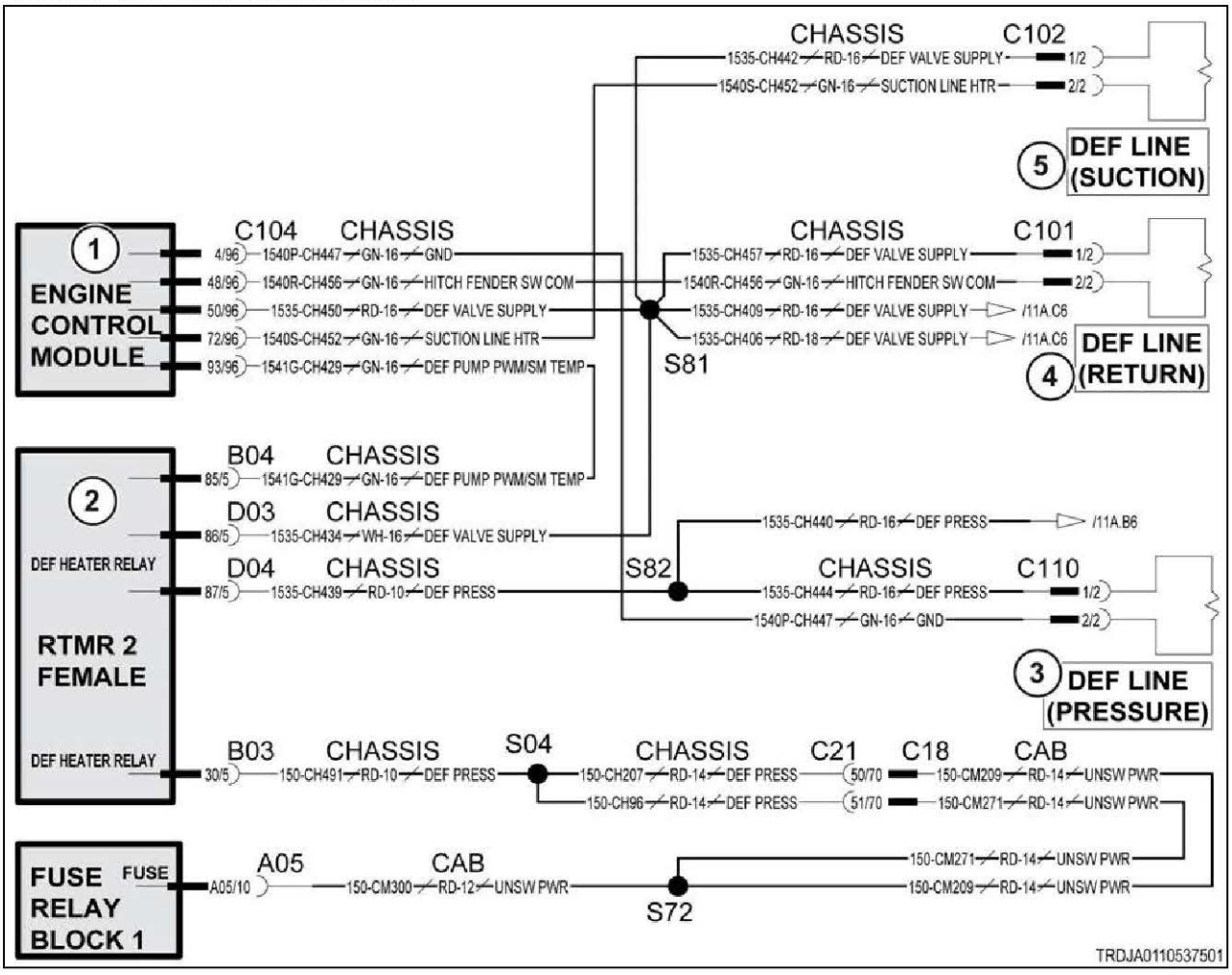

Fig. 88

Schematic legend		
Item	**Schematic term**	**Description**
1	ENGINE CONTROL MODULE	Engine module
2	RTMR 2 FEMALE	Rear terminal mini-fuse relay 2 female
3	DEF LINE (PRESSURE)	DEF pressure line
4	DEF LINE (RETURN)	DEF return line
5	DEF LINE (SUCTION)	DEF suction line
--	SUCTION LINE HTR	DEF suction line heater
--	HITCH FENDER SW COM	Hitch fender switch common
--	DEF PUMP PWM/SM TEMP	DEF pump pulse width modulation/supply module temperature
--	DEF PRESS	DEF pressure
--	UNSW PWR	Unswitched power

10.5.58 Code SA 00 SPN 4360 FMI 02

SCR catalyst inlet exhaust gas temperature sensor plausibility test failed.

Diagnosis and solution

1. Clear the error log.
2. Restart the engine module.
3. If the fault code shows again during the next driving cycle, check the following.
4. Check the inlet exhaust gas temperature sensor assembly. Make sure the assembly installation is correct.
5. Check the inlet exhaust gas temperature sensor harness. Make sure the connections are good and the contacts are clean.
6. Replace the inlet exhaust gas temperature sensor. If the system is correct and the fault code is not active, the original inlet exhaust gas temperature sensor is bad.

10.5.58.1 NOx sensor electrical schematic

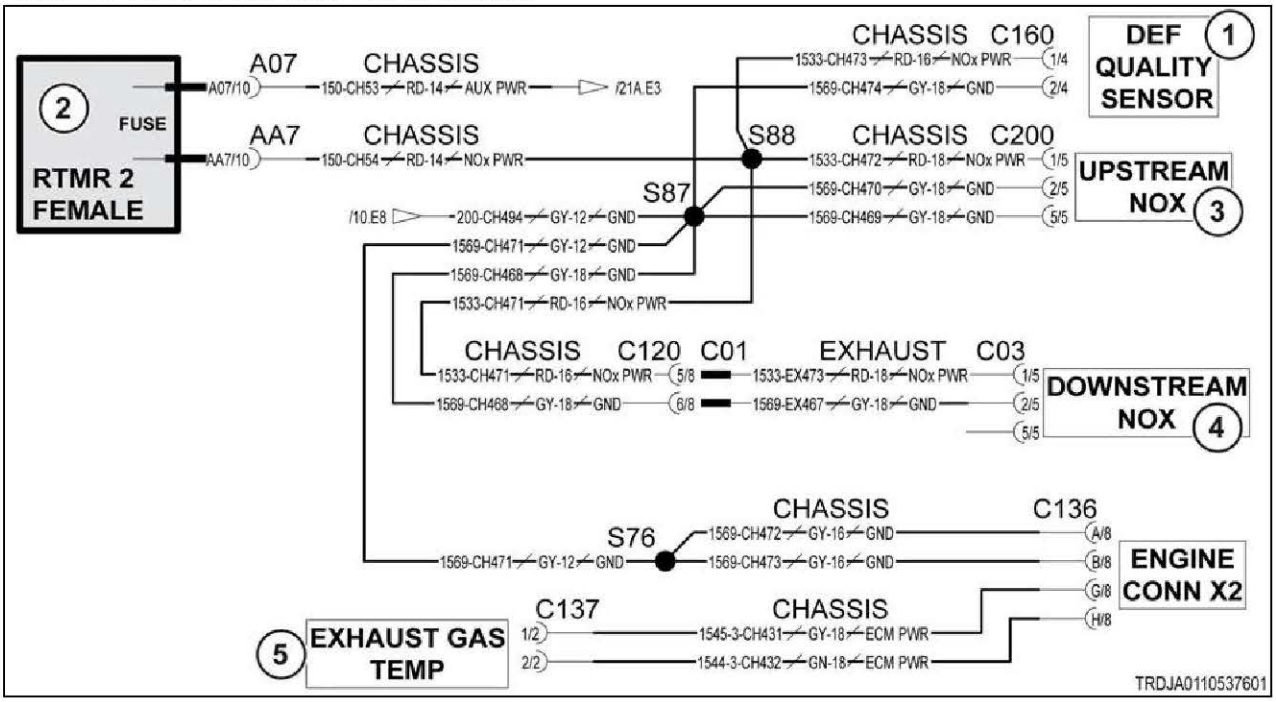

Fig. 89

Schematic legend		
Item	**Schematic term**	**Description**
1	DEF QUALITY SENSOR	DEF quality sensor
2	RTMR 2 FEMALE	Rear terminal mini-fuse relay 2 female
3	UPSTREAM NOX	Upstream NOx
4	DOWNSTREAM NOX	Downstream NOx
5	EXHAUST GAS TEMP	Exhaust gas temperature
--	GND	Ground
--	NOX PWR	NOx sensor power
--	AUX PWR	Auxiliary power
--	ECM PWR	Module power
--	ENGINE CONN X2	Engine connector

10.5.59 Code SA 00 SPN 4360 FMI 03

SCR inlet exhaust gas temperature sensor signal is above normal operating range.

Diagnosis and solution

1. Clear the error log.
2. Restart the engine module.
3. If the fault code shows again during the next driving cycle, check the following.
4. Check the inlet exhaust gas temperature sensor harness. Make sure the connections are good and the contacts are clean.

5. Replace the inlet exhaust gas temperature sensor. If the system is correct and the fault code is not active, the original inlet exhaust gas temperature sensor is bad.

10.5.59.1 NOx sensor electrical schematic

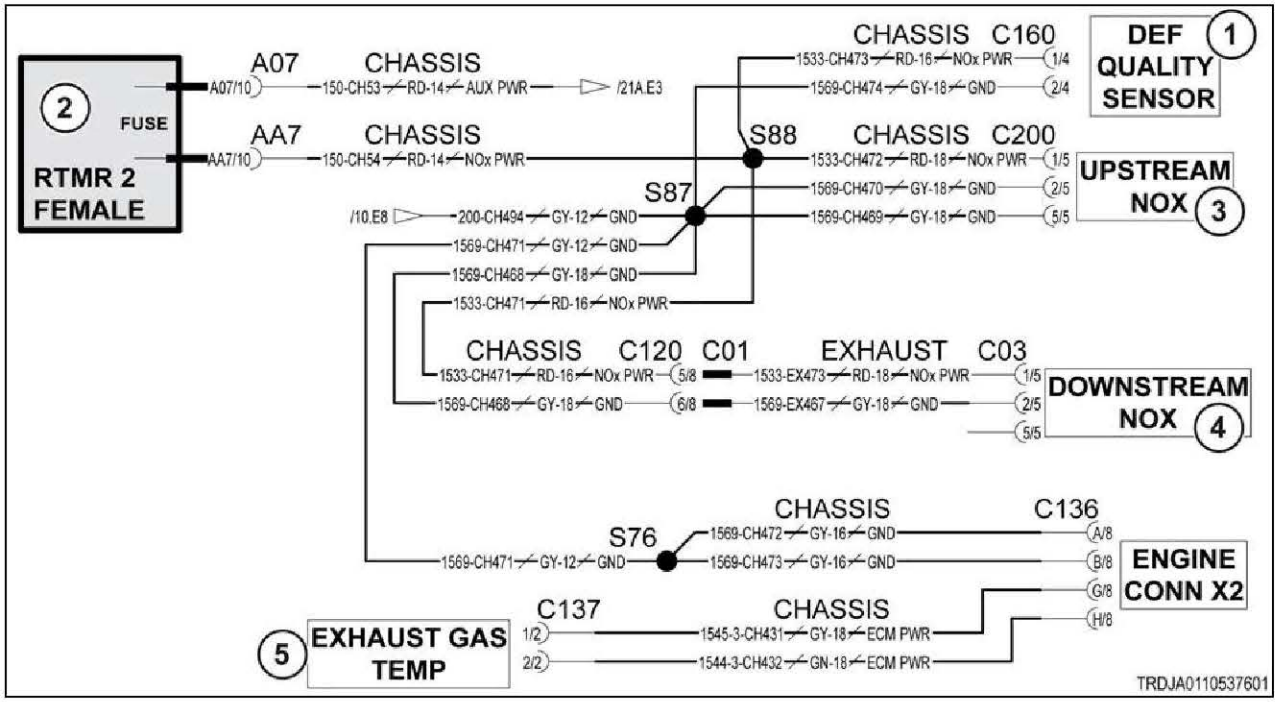

Fig. 90

Schematic legend		
Item	**Schematic term**	**Description**
1	DEF QUALITY SENSOR	DEF quality sensor
2	RTMR 2 FEMALE	Rear terminal mini-fuse relay 2 female
3	UPSTREAM NOX	Upstream NOx
4	DOWNSTREAM NOX	Downstream NOx
5	EXHAUST GAS TEMP	Exhaust gas temperature
--	GND	Ground
--	NOX PWR	NOx sensor power
--	AUX PWR	Auxiliary power
--	ECM PWR	Module power
--	ENGINE CONN X2	Engine connector

10.5.60 Code SA 00 SPN 4360 FMI 04

SCR inlet exhaust gas temperature sensor signal is below normal operating range.

Diagnosis and solution

1. Clear the error log.
2. Restart the engine module.
3. If the fault code shows again during the next driving cycle, check the following.
4. Check the inlet exhaust gas temperature sensor harness. Make sure the connections are good and the contacts are clean.

5. Replace the inlet exhaust gas temperature sensor. If the system is correct and the fault code is not active, the original inlet exhaust gas temperature sensor is bad.

10.5.60.1 NOx sensor electrical schematic

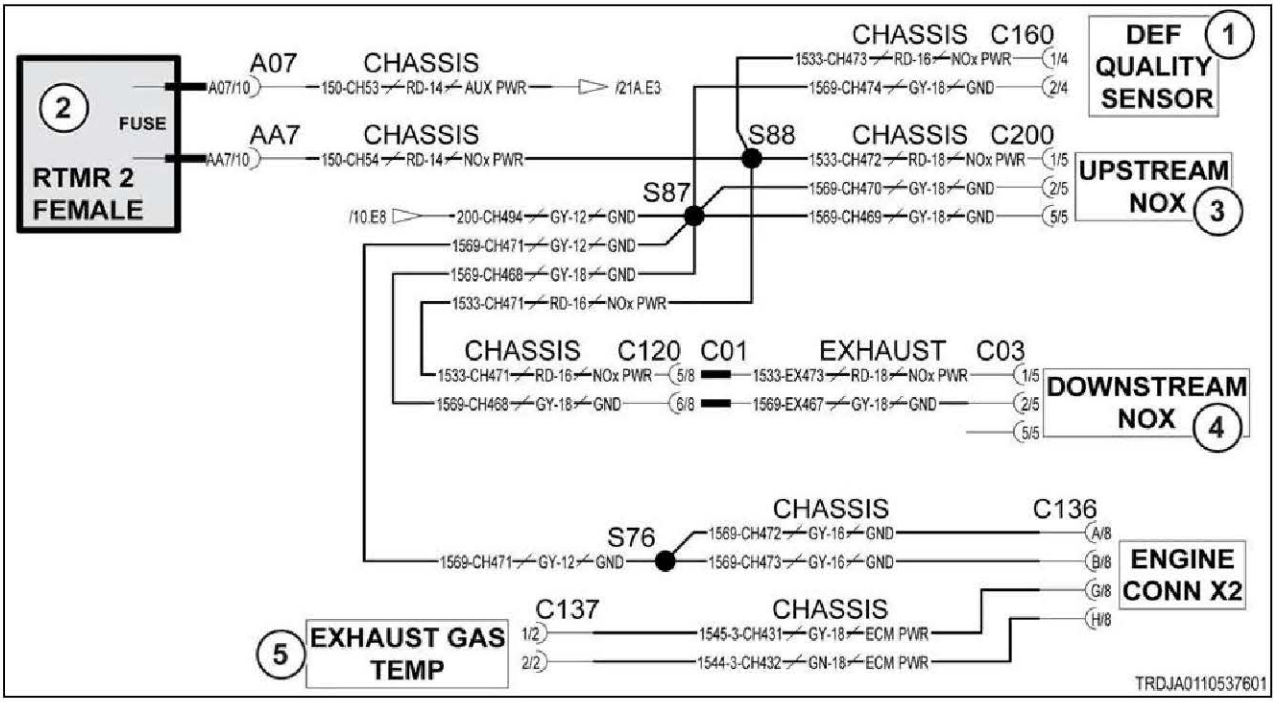

Fig. 91

Schematic legend		
Item	**Schematic term**	**Description**
1	DEF QUALITY SENSOR	DEF quality sensor
2	RTMR 2 FEMALE	Rear terminal mini-fuse relay 2 female
3	UPSTREAM NOX	Upstream NOx
4	DOWNSTREAM NOX	Downstream NOx
5	EXHAUST GAS TEMP	Exhaust gas temperature
--	GND	Ground
--	NOX PWR	NOx sensor power
--	AUX PWR	Auxiliary power
--	ECM PWR	Module power
--	ENGINE CONN X2	Engine connector

10.5.61 Code SA 00 SPN 4363 FMI 02

SCR catalyst outlet exhaust gas temperature sensor plausibility test failed.

Diagnosis and solution

1. Clear the error log.
2. Restart the engine module.
3. If the fault code shows again during the next driving cycle, check the following.
4. Check the outlet exhaust gas temperature sensor assembly. Make sure the assembly installation is correct.

5. Check the outlet exhaust gas temperature sensor harness. Make sure the connections are good and the contacts are clean.

6. Replace the outlet exhaust gas temperature sensor. If the system is correct and the fault code is not active, the original outlet exhaust gas temperature sensor is bad.

10.5.61.1 NOx sensor electrical schematic

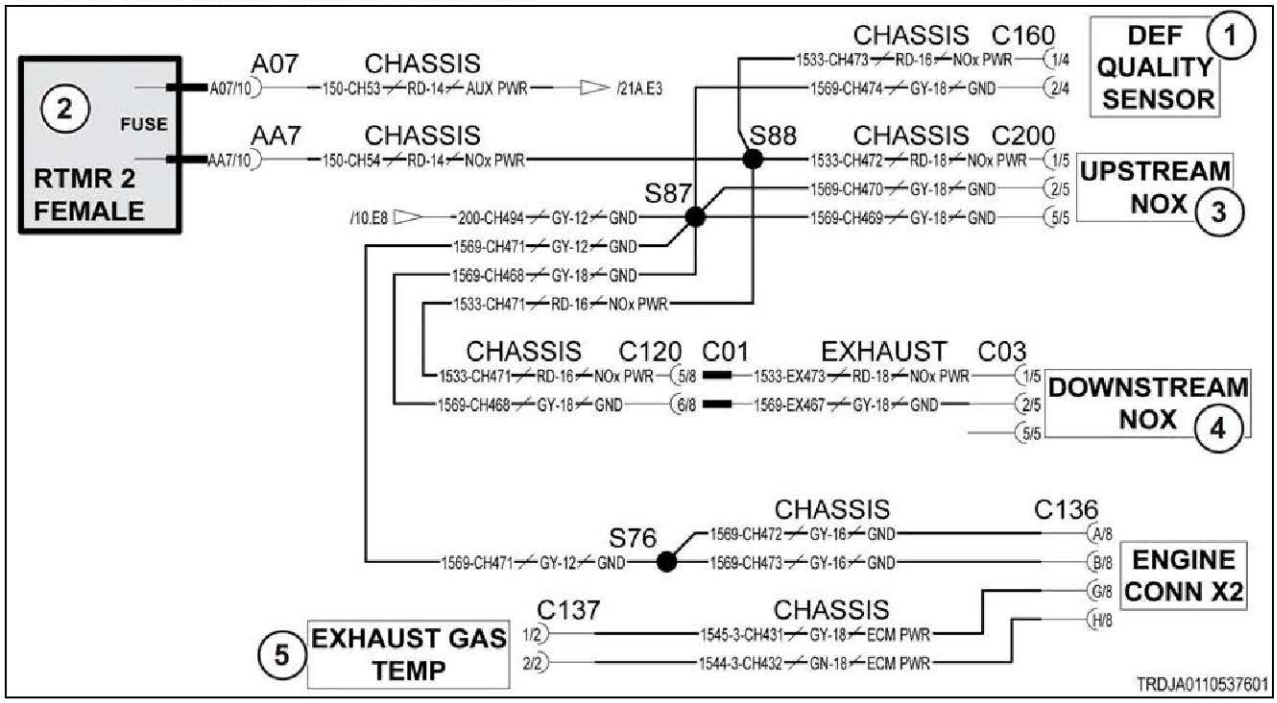

Fig. 92

Schematic legend		
Item	**Schematic term**	**Description**
1	DEF QUALITY SENSOR	DEF quality sensor
2	RTMR 2 FEMALE	Rear terminal mini-fuse relay 2 female
3	UPSTREAM NOX	Upstream NOx
4	DOWNSTREAM NOX	Downstream NOx
5	EXHAUST GAS TEMP	Exhaust gas temperature
--	GND	Ground
--	NOX PWR	NOx sensor power
--	AUX PWR	Auxiliary power
--	ECM PWR	Module power
--	ENGINE CONN X2	Engine connector

10.5.62 Code SA 00 SPN 4363 FMI 03

SCR outlet exhaust gas temperature sensor signal is above normal operating range.

Diagnosis and solution

1. Clear the error log.
2. Restart the engine module.
3. If the fault code shows again during the next driving cycle, check the following.

4. Check the outlet exhaust gas temperature sensor harness. Make sure the connections are good and the contacts are clean.

5. Replace the outlet exhaust gas temperature sensor. If the system is correct and the fault code is not active, the original outlet exhaust gas temperature sensor is bad.

10.5.62.1 NOx sensor electrical schematic

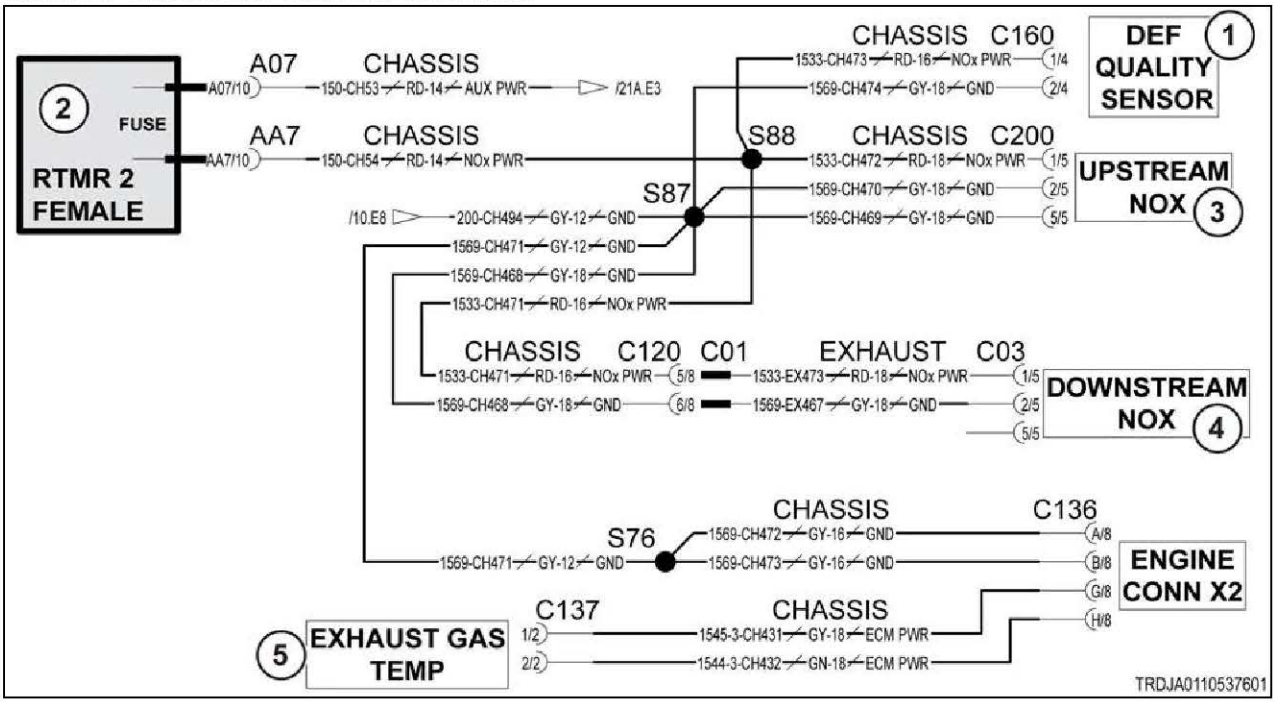

Fig. 93

Schematic legend		
Item	**Schematic term**	**Description**
1	DEF QUALITY SENSOR	DEF quality sensor
2	RTMR 2 FEMALE	Rear terminal mini-fuse relay 2 female
3	UPSTREAM NOX	Upstream NOx
4	DOWNSTREAM NOX	Downstream NOx
5	EXHAUST GAS TEMP	Exhaust gas temperature
--	GND	Ground
--	NOX PWR	NOx sensor power
--	AUX PWR	Auxiliary power
--	ECM PWR	Module power
--	ENGINE CONN X2	Engine connector

10.5.63 Code SA 00 SPN 4363 FMI 04

SCR outlet exhaust gas temperature sensor signal is below normal operating range.

Diagnosis and solution

1. Clear the error log.
2. Restart the engine module.
3. If the fault code shows again during the next driving cycle, check the following.

4. Check the outlet exhaust gas temperature sensor harness. Make sure the connections are good and the contacts are clean.

5. Replace the outlet exhaust gas temperature sensor. If the system is correct and the fault code is not active, the original outlet exhaust gas temperature sensor is bad.

10.5.63.1 NOx sensor electrical schematic

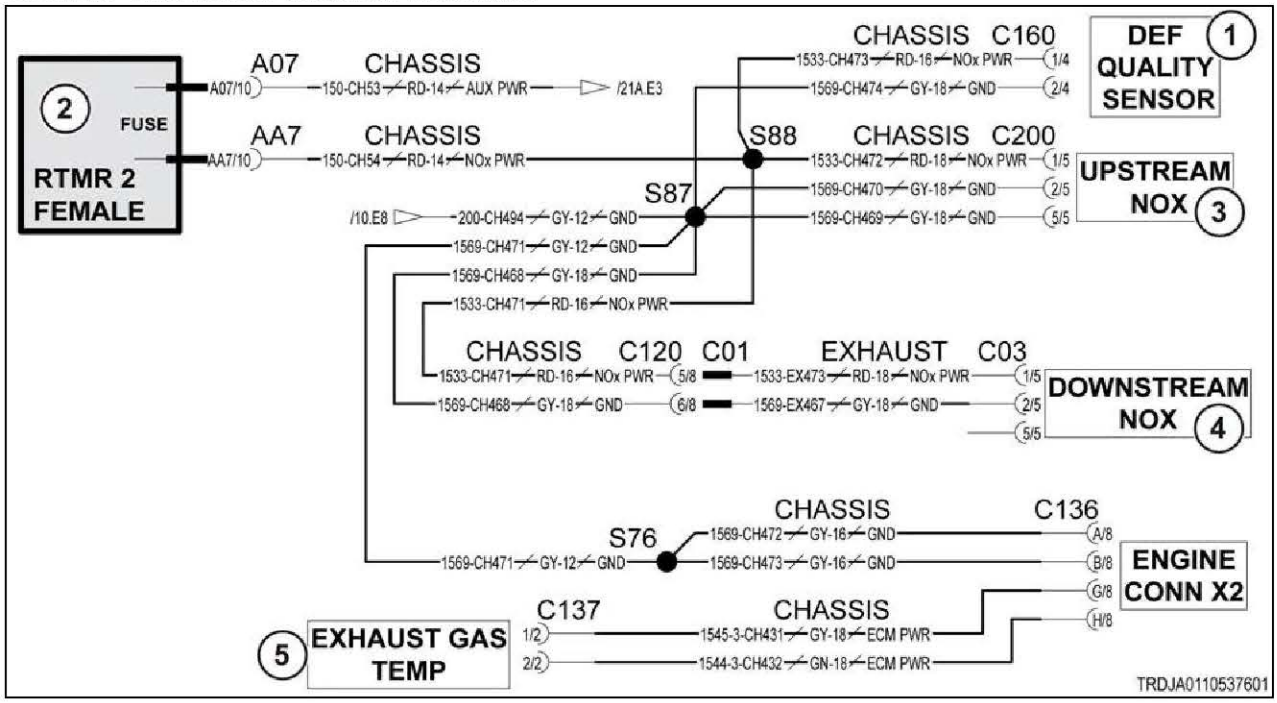

Fig. 94

Schematic legend		
Item	**Schematic term**	**Description**
1	DEF QUALITY SENSOR	DEF quality sensor
2	RTMR 2 FEMALE	Rear terminal mini-fuse relay 2 female
3	UPSTREAM NOX	Upstream NOx
4	DOWNSTREAM NOX	Downstream NOx
5	EXHAUST GAS TEMP	Exhaust gas temperature
--	GND	Ground
--	NOX PWR	NOx sensor power
--	AUX PWR	Auxiliary power
--	ECM PWR	Module power
--	ENGINE CONN X2	Engine connector

10.5.64 Code SA 00 SPN 4374 FMI 08

DEF pump motor speed deviation.

SPN 4374 Diagnosis and solution

1. Clear the error log.
2. Restart the engine module.
3. If the fault code shows again during the next driving cycle, check the following.

4. Check the DEF supply module harness. Make sure the connections are good and the contacts are clean.
5. Replace the DEF supply module. If the system is correct and the fault code is not active, the original DEF supply module is bad.
6. Replace the engine module. If the system is correct and the fault code is not active, the original engine module is bad.

10.5.64.1 DEF electrical schematic

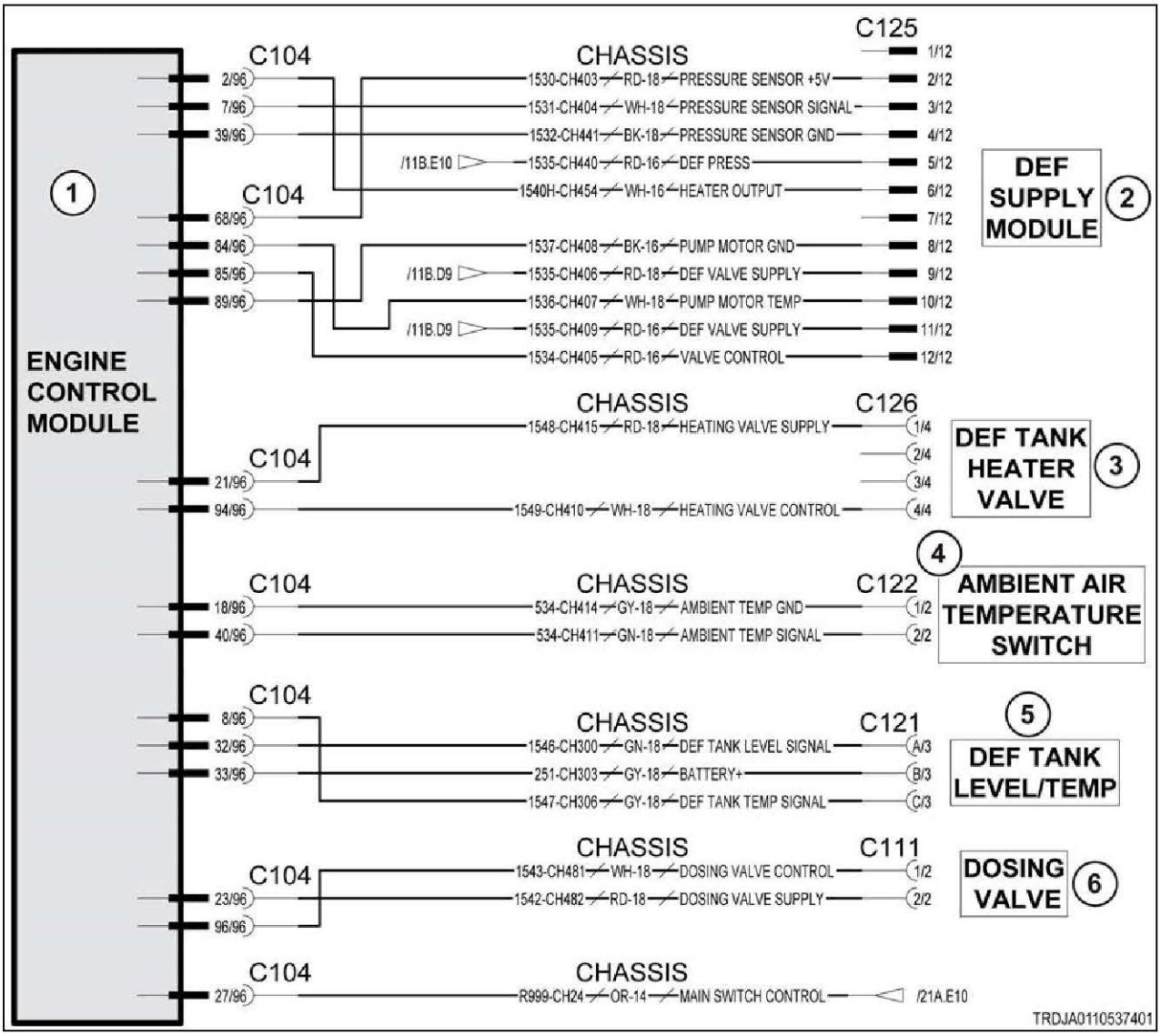

Fig. 95

Schematic legend		
Item	**Schematic term**	**Description**
1	ENGINE CONTROL MODULE	Engine module
2	DEF SUPPLY MODULE	DEF supply module
3	DEF TANK HEATER VALVE	DEF tank heater valve
4	AMBIENT AIR TEMPERATURE SWITCH	Ambient air temperature switch
5	DEF TANK LEVEL/TEMP	DEF tank level/temperature
6	DOSING VALVE	Dosing valve

Schematic legend		
Item	**Schematic term**	**Description**
--	DEF PRESS SENSOR GND	DEF pressure sensor ground
--	PUMP MOTOR GND	Pump motor ground
--	PUMP MOTOR TEMP	Pump motor temperature
--	AMBIENT TEMP GND	Ambient temperature ground

10.5.65 Code SA 00 SPN 4374 FMI 14

DEF pump motor speed permanent deviation.

Diagnosis and solution

1. Clear the error log.
2. Restart the engine module.
3. If the fault code shows again during the next driving cycle, check the following.
4. Check the DEF supply module harness. Make sure the connections are good and the contacts are clean.
5. Replace the DEF supply module. If the system is correct and the fault code is not active, the original DEF supply module is bad.
6. Replace the engine module. If the system is correct and the fault code is not active, the original engine module is bad.

10.5.65.1 DEF electrical schematic

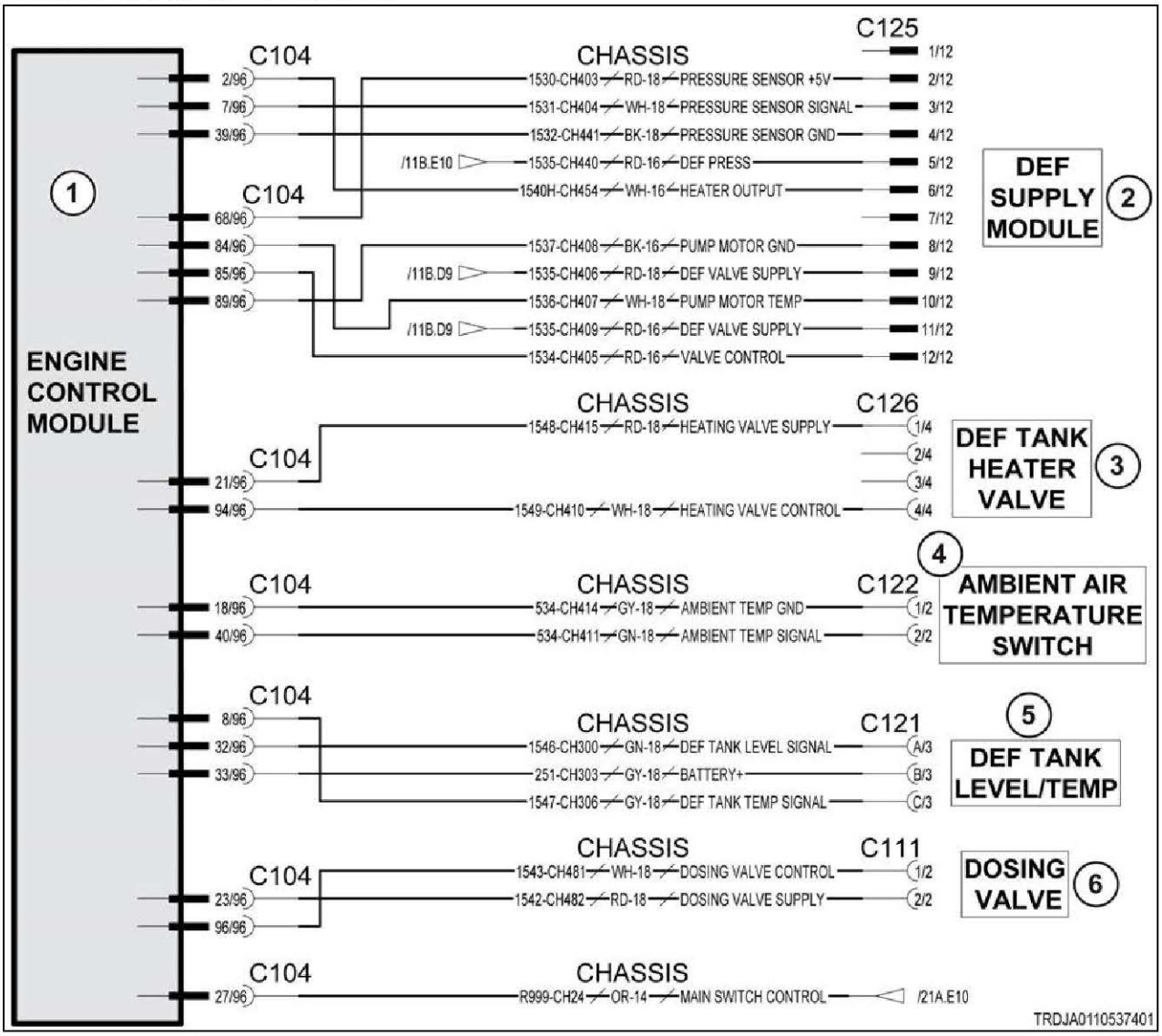

Fig. 96

Schematic legend		
Item	**Schematic term**	**Description**
1	ENGINE CONTROL MODULE	Engine module
2	DEF SUPPLY MODULE	DEF supply module
3	DEF TANK HEATER VALVE	DEF tank heater valve
4	AMBIENT AIR TEMPERATURE SWITCH	Ambient air temperature switch
5	DEF TANK LEVEL/TEMP	DEF tank level/temperature
6	DOSING VALVE	Dosing valve
--	DEF PRESS SENSOR GND	DEF pressure sensor ground
--	PUMP MOTOR GND	Pump motor ground
--	PUMP MOTOR TEMP	Pump motor temperature
--	AMBIENT TEMP GND	Ambient temperature ground

10.5.66 Code SA 00 SPN 4374 FMI 31

DEF pump motor not available for actuation.

Diagnosis and solution

1. Clear the error log.
2. Restart the engine module.
3. If the fault code shows again during the next driving cycle, check the following.
4. Check the DEF supply module harness. Make sure the connections are good and the contacts are clean.
5. Replace the DEF supply module. If the system is correct and the fault code is not active, the original DEF supply module is bad.

10.5.66.1 DEF electrical schematic

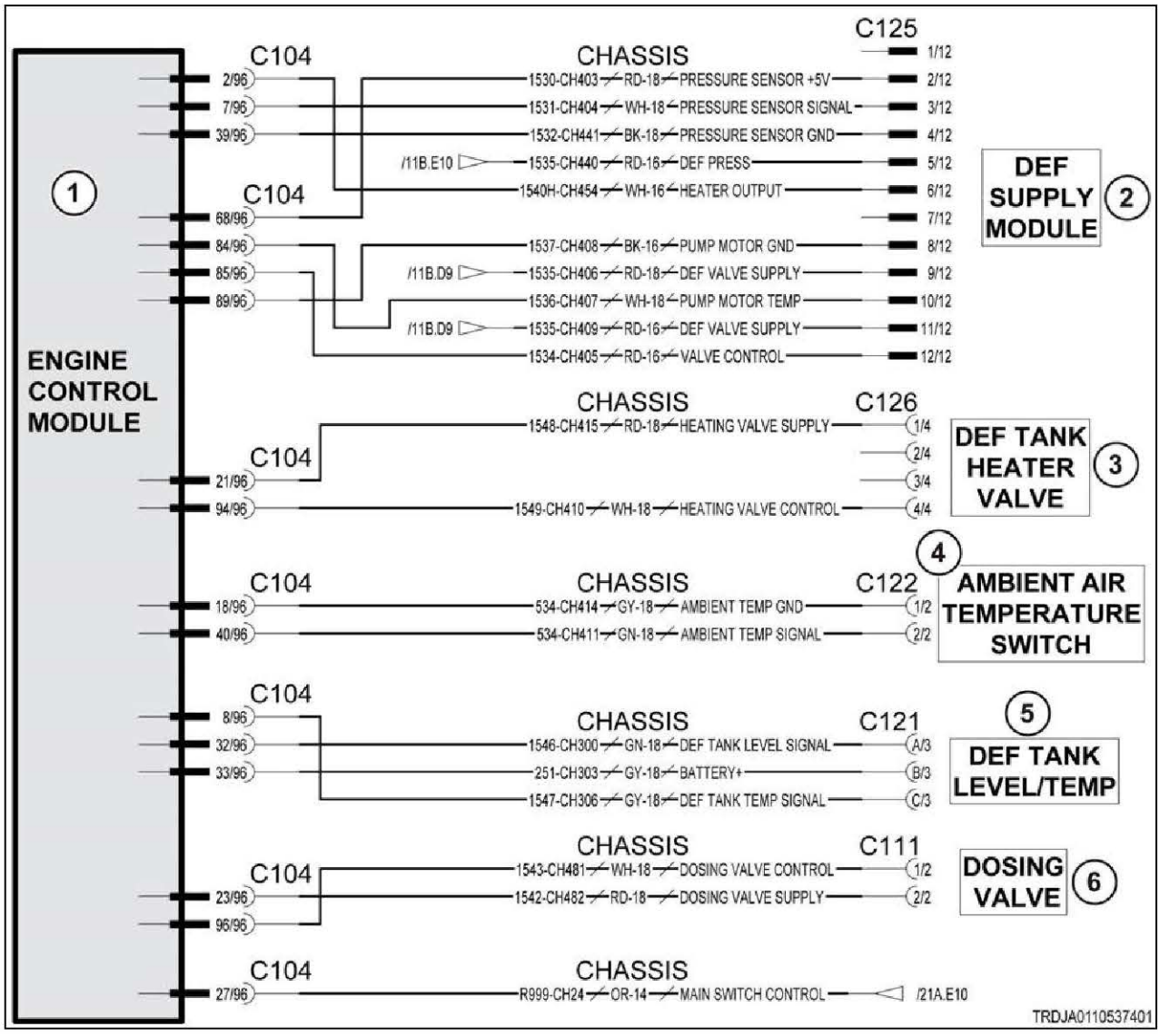

Fig. 97

Schematic legend		
Item	**Schematic term**	**Description**
1	ENGINE CONTROL MODULE	Engine module
2	DEF SUPPLY MODULE	DEF supply module
3	DEF TANK HEATER VALVE	DEF tank heater valve
4	AMBIENT AIR TEMPERATURE SWITCH	Ambient air temperature switch
5	DEF TANK LEVEL/TEMP	DEF tank level/temperature
6	DOSING VALVE	Dosing valve
--	DEF PRESS SENSOR GND	DEF pressure sensor ground
--	PUMP MOTOR GND	Pump motor ground
--	PUMP MOTOR TEMP	Pump motor temperature
--	AMBIENT TEMP GND	Ambient temperature ground

10.5.67 Code SA 00 SPN 4375 FMI 03

Short circuit in DEF pump motor control signal.

Diagnosis and solution

1. Clear the error log.
2. Restart the engine module.
3. If the fault code shows again during the next driving cycle, check the following.
4. Check the DEF supply module harness. Make sure the connections are good and the contacts are clean.
5. Replace the DEF supply module. If the system is correct and the fault code is not active, the original DEF supply module is bad.

10.5.67.1 DEF electrical schematic

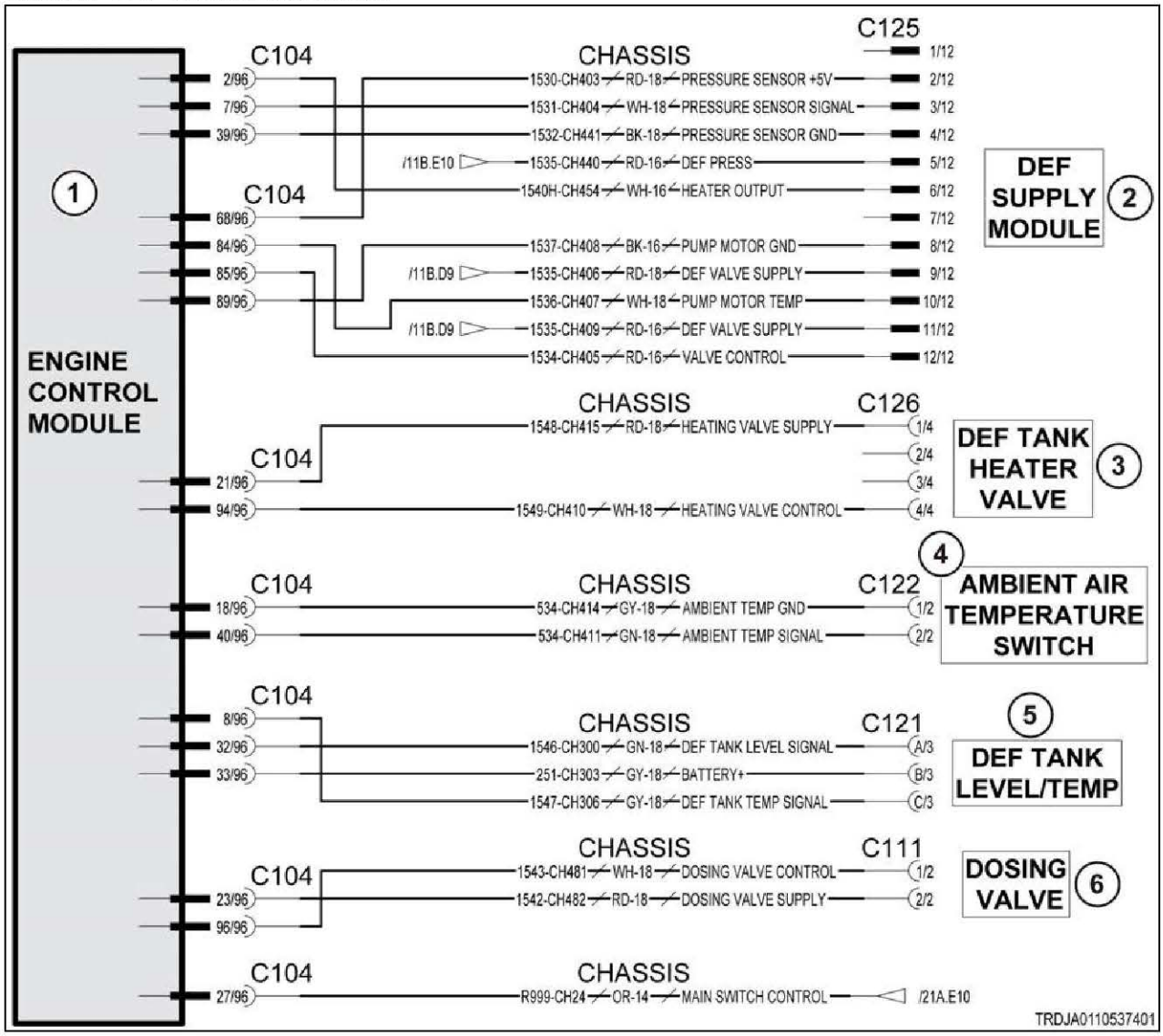

Fig. 98

Schematic legend		
Item	**Schematic term**	**Description**
1	ENGINE CONTROL MODULE	Engine module
2	DEF SUPPLY MODULE	DEF supply module
3	DEF TANK HEATER VALVE	DEF tank heater valve
4	AMBIENT AIR TEMPERATURE SWITCH	Ambient air temperature switch
5	DEF TANK LEVEL/TEMP	DEF tank level/temperature
6	DOSING VALVE	Dosing valve
--	DEF PRESS SENSOR GND	DEF pressure sensor ground
--	PUMP MOTOR GND	Pump motor ground
--	PUMP MOTOR TEMP	Pump motor temperature
--	AMBIENT TEMP GND	Ambient temperature ground

10.5.68 Code SA 00 SPN 4375 FMI 04

Short circuit in DEF pump motor control signal.

Diagnosis and solution

1. Clear the error log.
2. Restart the engine module.
3. If the fault code shows again during the next driving cycle, check the following.
4. Check the DEF supply module harness. Make sure the connections are good and the contacts are clean.
5. Replace the DEF supply module. If the system is correct and the fault code is not active, the original DEF supply module is bad.

10.5.68.1 DEF electrical schematic

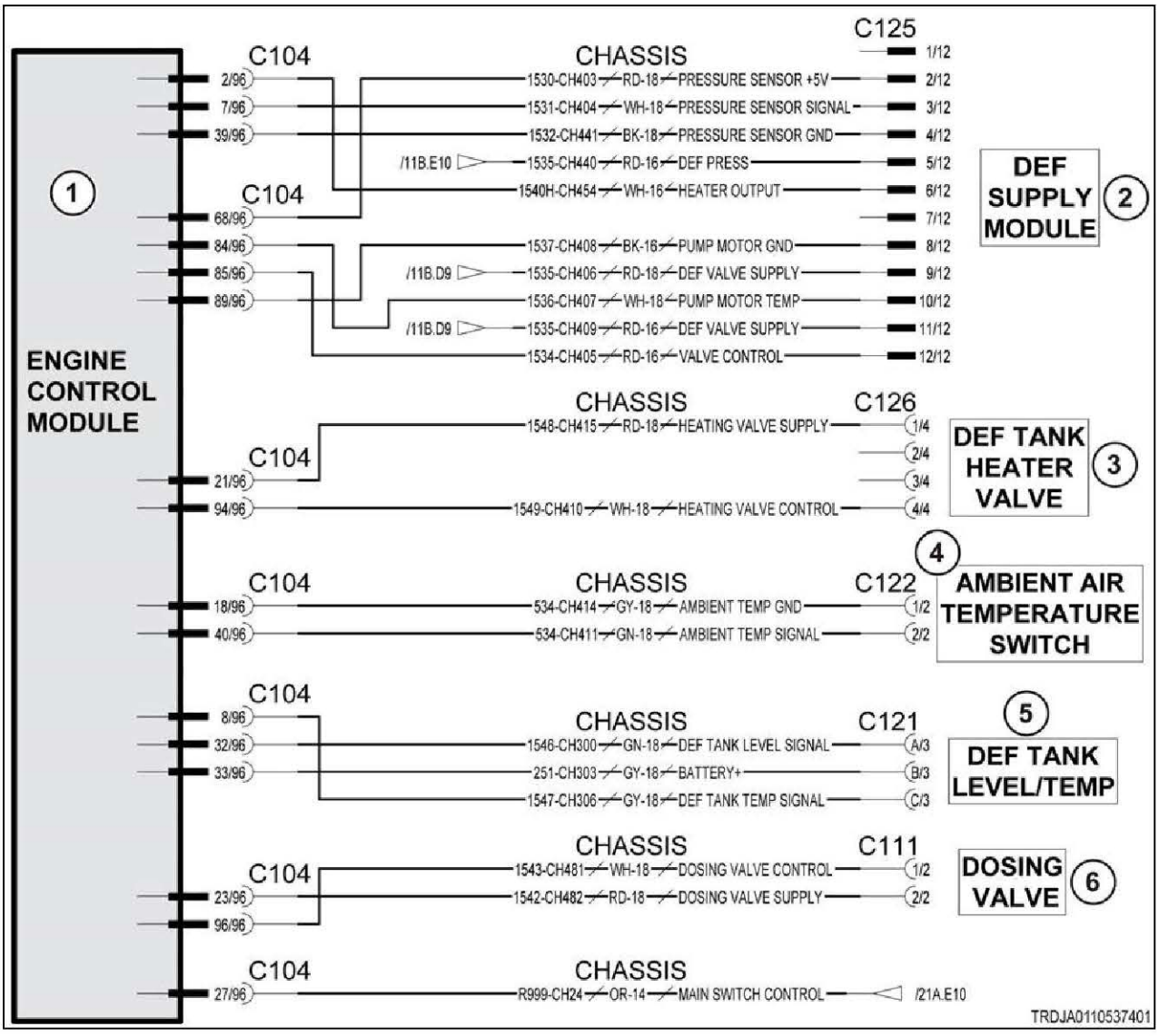

Fig. 99

Schematic legend		
Item	Schematic term	Description
1	ENGINE CONTROL MODULE	Engine module
2	DEF SUPPLY MODULE	DEF supply module
3	DEF TANK HEATER VALVE	DEF tank heater valve
4	AMBIENT AIR TEMPERATURE SWITCH	Ambient air temperature switch
5	DEF TANK LEVEL/TEMP	DEF tank level/temperature
6	DOSING VALVE	Dosing valve
--	DEF PRESS SENSOR GND	DEF pressure sensor ground
--	PUMP MOTOR GND	Pump motor ground
--	PUMP MOTOR TEMP	Pump motor temperature
--	AMBIENT TEMP GND	Ambient temperature ground

10.5.69 Code SA 00 SPN 4375 FMI 05

DEF pump motor control signal current is below normal or open circuit.

Diagnosis and solution

1. Clear the error log.
2. Restart the engine module.
3. If the fault code shows again during the next driving cycle, check the following.
4. Check the DEF supply module harness. Make sure the connections are good and the contacts are clean.
5. Replace the DEF supply module. If the system is correct and the fault code is not active, the original DEF supply module is bad.

10.5.69.1 DEF electrical schematic

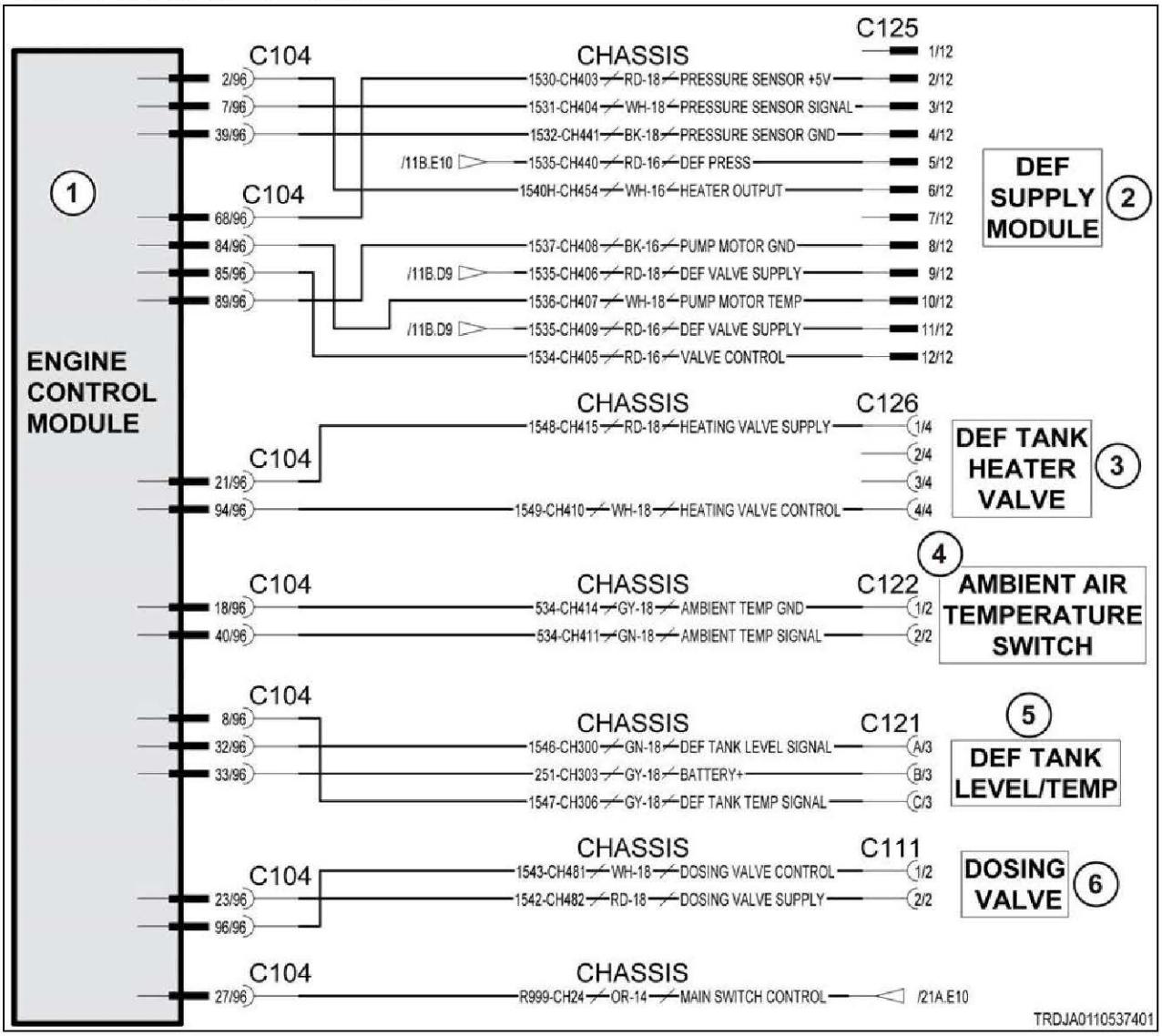

Fig. 100

Schematic legend		
Item	**Schematic term**	**Description**
1	ENGINE CONTROL MODULE	Engine module
2	DEF SUPPLY MODULE	DEF supply module
3	DEF TANK HEATER VALVE	DEF tank heater valve
4	AMBIENT AIR TEMPERATURE SWITCH	Ambient air temperature switch
5	DEF TANK LEVEL/TEMP	DEF tank level/temperature
6	DOSING VALVE	Dosing valve
--	DEF PRESS SENSOR GND	DEF pressure sensor ground
--	PUMP MOTOR GND	Pump motor ground
--	PUMP MOTOR TEMP	Pump motor temperature
--	AMBIENT TEMP GND	Ambient temperature ground

10.5.70 Code SA 00 SPN 4375 FMI 31

DEF pump motor control signal current is below normal or open circuit.

Diagnosis and solution

1. Clear the error log.
2. Restart the engine module.
3. If the fault code shows again during the next driving cycle, check the following.
4. Check the DEF supply module harness. Make sure the connections are good and the contacts are clean.
5. Replace the DEF supply module. If the system is correct and the fault code is not active, the original DEF supply module is bad.
6. Replace the engine module. If the system is correct and the fault code is not active, the original engine module is bad.

10.5.70.1 DEF electrical schematic

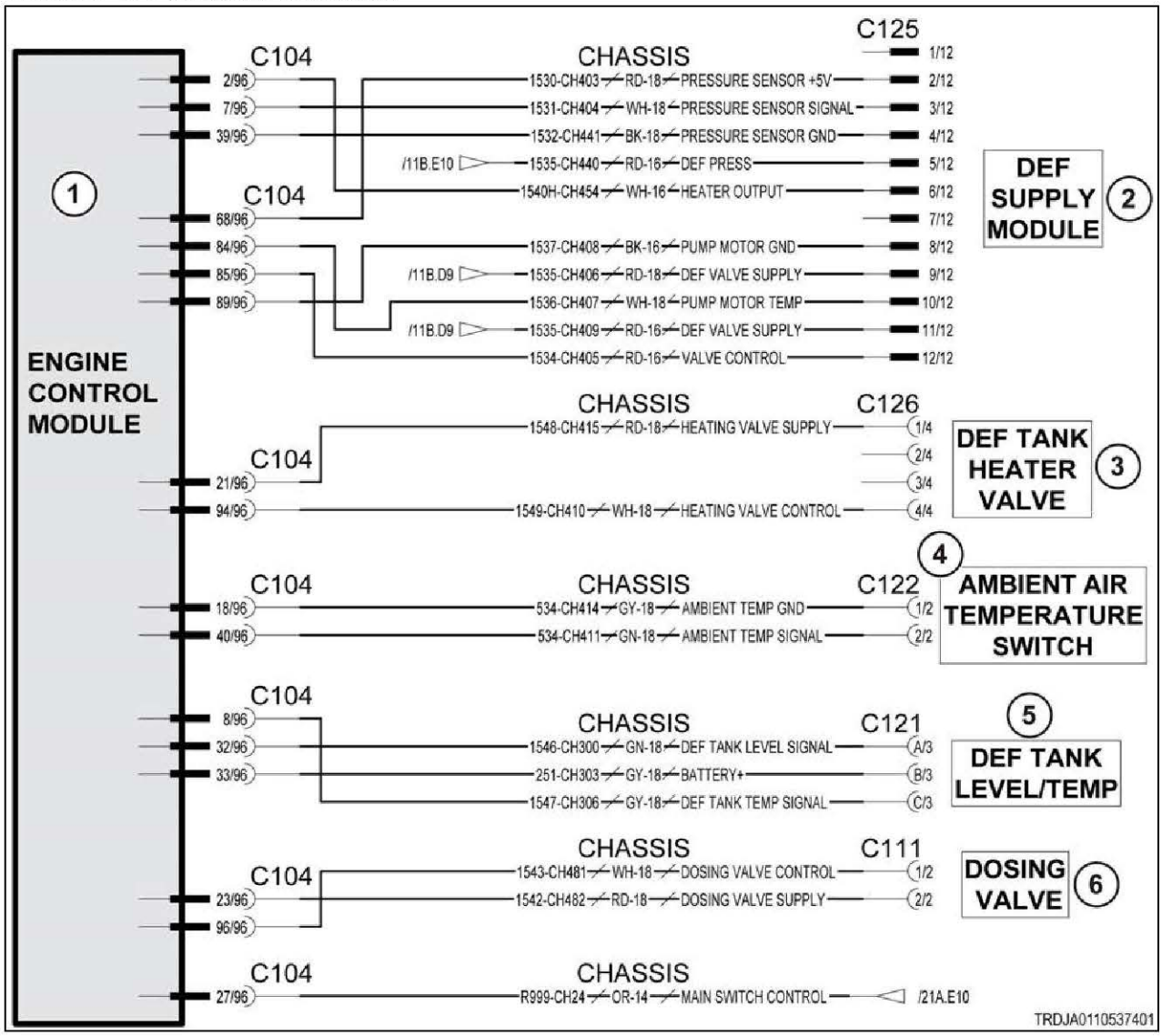

Fig. 101

Schematic legend		
Item	**Schematic term**	**Description**
1	ENGINE CONTROL MODULE	Engine module
2	DEF SUPPLY MODULE	DEF supply module
3	DEF TANK HEATER VALVE	DEF tank heater valve
4	AMBIENT AIR TEMPERATURE SWITCH	Ambient air temperature switch
5	DEF TANK LEVEL/TEMP	DEF tank level/temperature
6	DOSING VALVE	Dosing valve
--	DEF PRESS SENSOR GND	DEF pressure sensor ground
--	PUMP MOTOR GND	Pump motor ground
--	PUMP MOTOR TEMP	Pump motor temperature
--	AMBIENT TEMP GND	Ambient temperature ground

10.5.71 Code SA 00 SPN 4376 FMI 03

Short circuit in DEF pump direction valve low side.

Diagnosis and solution

1. Clear the error log.
2. Restart the engine module.
3. If the fault code shows again during the next driving cycle, check the following.
4. Check the DEF supply module harness. Make sure the connections are good and the contacts are clean.
5. Replace the DEF supply module. If the system is correct and the fault code is not active, the original DEF supply module is bad.

10.5.71.1 DEF electrical schematic

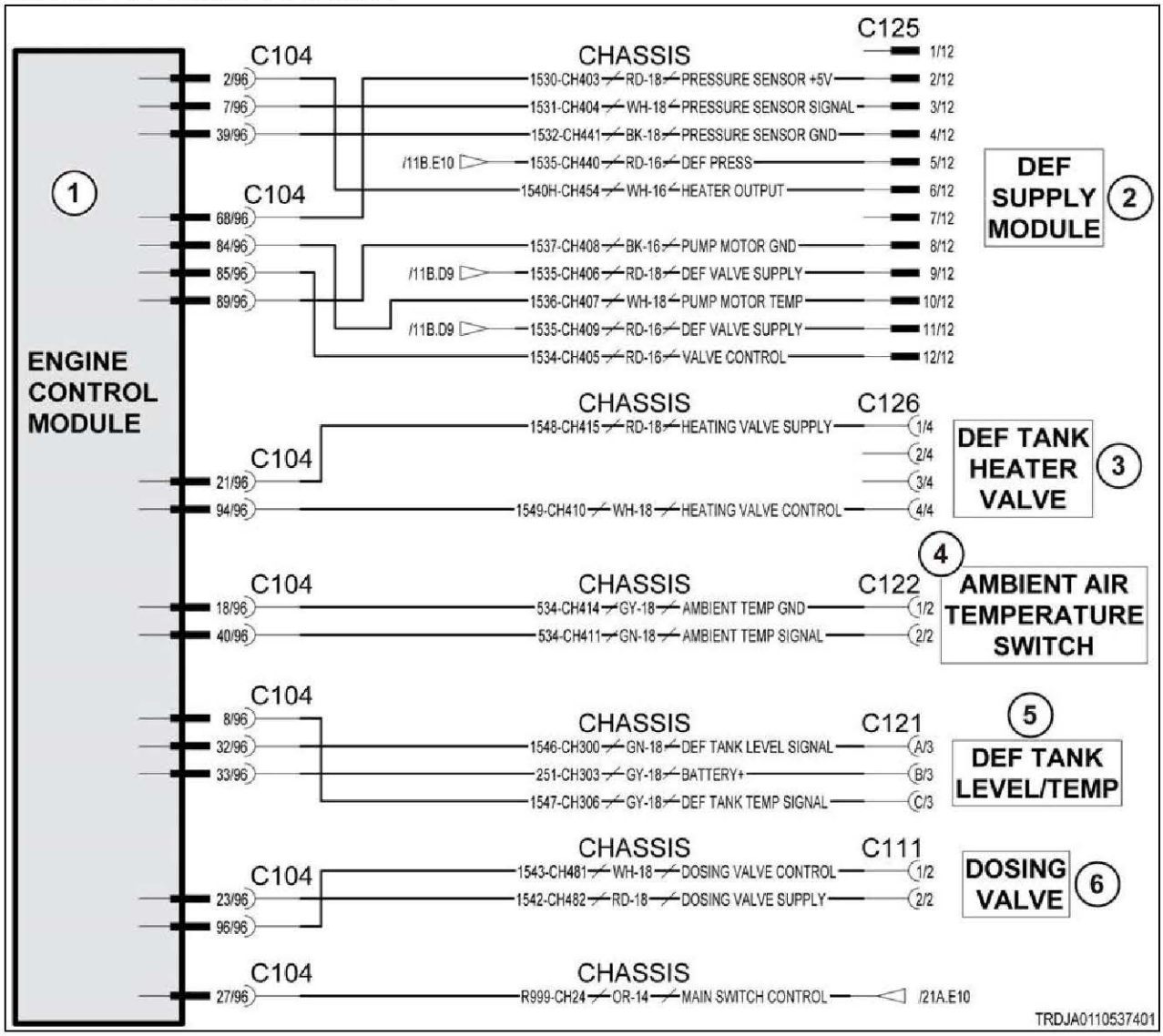

Fig. 102

Schematic legend		
Item	**Schematic term**	**Description**
1	ENGINE CONTROL MODULE	Engine module
2	DEF SUPPLY MODULE	DEF supply module
3	DEF TANK HEATER VALVE	DEF tank heater valve
4	AMBIENT AIR TEMPERATURE SWITCH	Ambient air temperature switch
5	DEF TANK LEVEL/TEMP	DEF tank level/temperature
6	DOSING VALVE	Dosing valve
--	DEF PRESS SENSOR GND	DEF pressure sensor ground
--	PUMP MOTOR GND	Pump motor ground
--	PUMP MOTOR TEMP	Pump motor temperature
--	AMBIENT TEMP GND	Ambient temperature ground

10.5.72 Code SA 00 SPN 4376 FMI 04

Short circuit in DEF pump direction valve low side.

Diagnosis and solution

1. Clear the error log.
2. Restart the engine module.
3. If the fault code shows again during the next driving cycle, check the following.
4. Check the DEF supply module harness. Make sure the connections are good and the contacts are clean.
5. Replace the DEF supply module. If the system is correct and the fault code is not active, the original DEF supply module is bad.

10.5.72.1 DEF electrical schematic

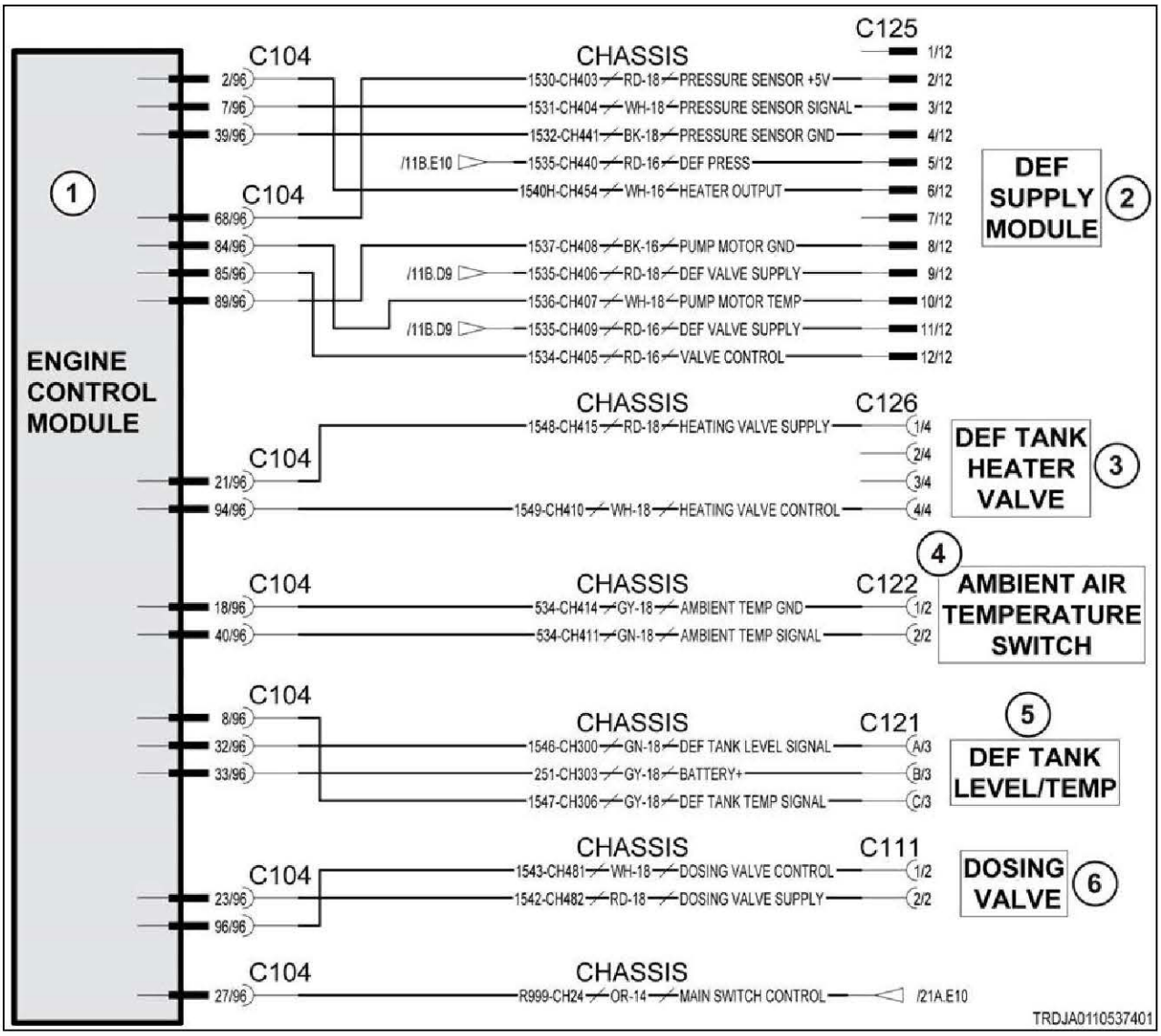

Fig. 103

Schematic legend		
Item	Schematic term	Description
1	ENGINE CONTROL MODULE	Engine module
2	DEF SUPPLY MODULE	DEF supply module
3	DEF TANK HEATER VALVE	DEF tank heater valve
4	AMBIENT AIR TEMPERATURE SWITCH	Ambient air temperature switch
5	DEF TANK LEVEL/TEMP	DEF tank level/temperature
6	DOSING VALVE	Dosing valve
--	DEF PRESS SENSOR GND	DEF pressure sensor ground
--	PUMP MOTOR GND	Pump motor ground
--	PUMP MOTOR TEMP	Pump motor temperature
--	AMBIENT TEMP GND	Ambient temperature ground

10.5.73 Code SA 00 SPN 4376 FMI 05

DEF pump direction valve low side current is below normal or open circuit.

Diagnosis and solution

1. Clear the error log.
2. Restart the engine module.
3. If the fault code shows again during the next driving cycle, check the following.
4. Check the DEF supply module harness. Make sure the connections are good and the contacts are clean.
5. Replace the DEF supply module. If the system is correct and the fault code is not active, the original DEF supply module is bad.

10.5.73.1 DEF electrical schematic

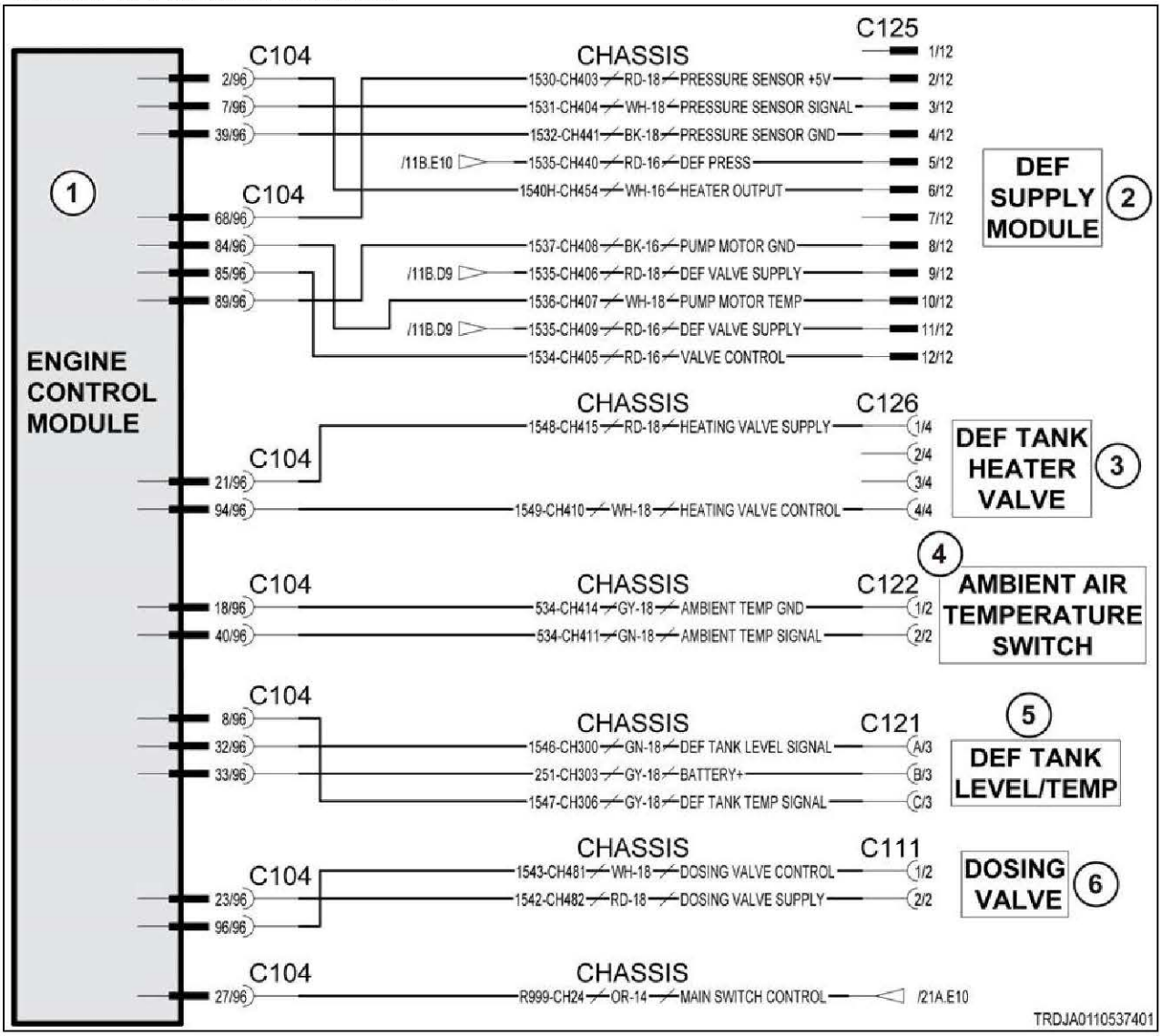

Fig. 104

Schematic legend		
Item	**Schematic term**	**Description**
1	ENGINE CONTROL MODULE	Engine module
2	DEF SUPPLY MODULE	DEF supply module
3	DEF TANK HEATER VALVE	DEF tank heater valve
4	AMBIENT AIR TEMPERATURE SWITCH	Ambient air temperature switch
5	DEF TANK LEVEL/TEMP	DEF tank level/temperature
6	DOSING VALVE	Dosing valve
--	DEF PRESS SENSOR GND	DEF pressure sensor ground
--	PUMP MOTOR GND	Pump motor ground
--	PUMP MOTOR TEMP	Pump motor temperature
--	AMBIENT TEMP GND	Ambient temperature ground

10.5.74 Code SA 00 SPN 4376 FMI 31

DEF pump direction valve low side control power stage over temperature.

Diagnosis and solution

1. Clear the error log.
2. Restart the engine module.
3. If the fault code shows again during the next driving cycle, check the following.
4. Check the DEF supply module harness. Make sure the connections are good and the contacts are clean.
5. Replace the DEF supply module. If the system is correct and the fault code is not active, the original DEF supply module is bad.
6. Replace the engine module. If the system is correct and the fault code is not active, the original engine module is bad.

10.5.74.1 DEF electrical schematic

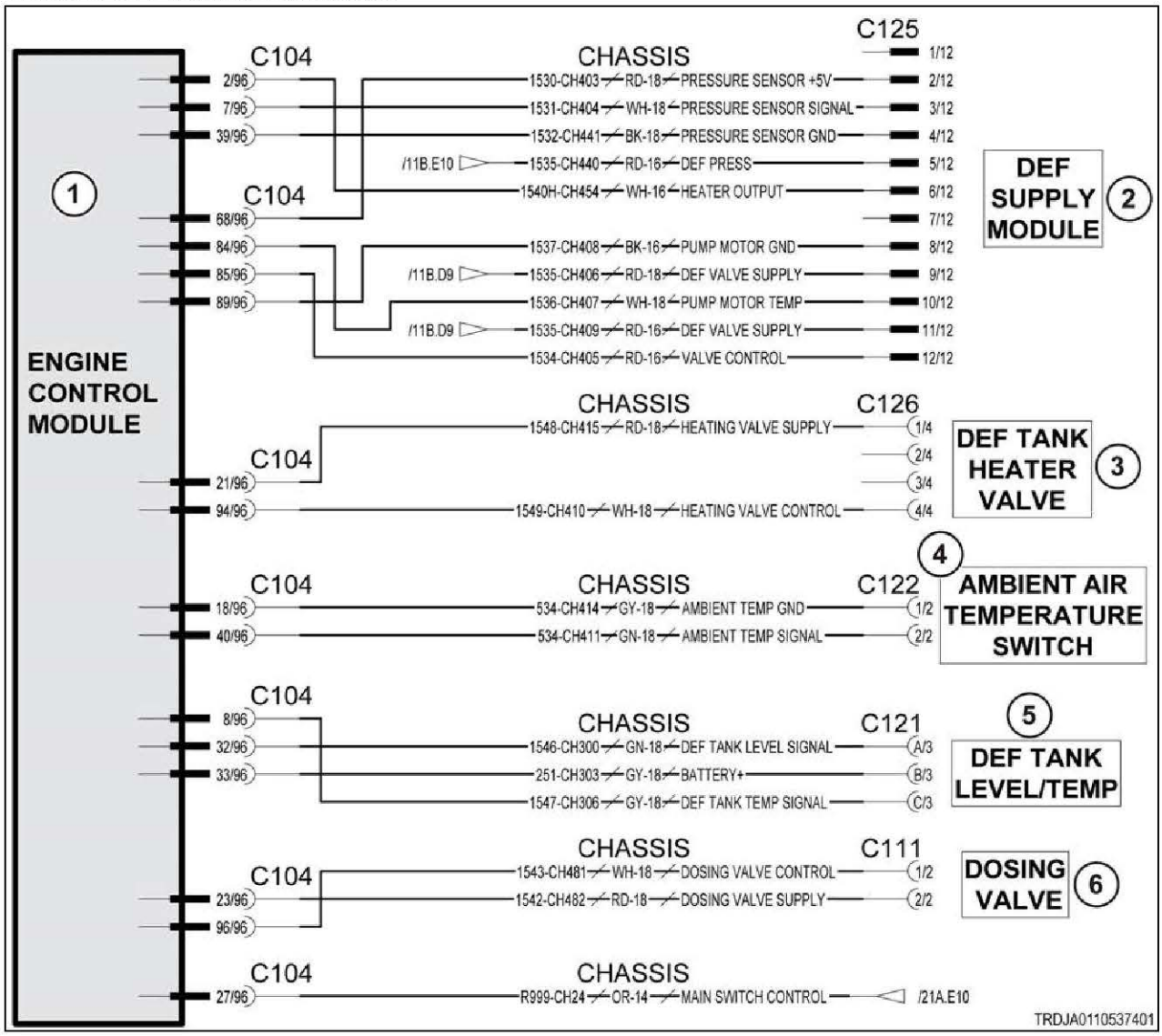

Fig. 105

Schematic legend		
Item	**Schematic term**	**Description**
1	ENGINE CONTROL MODULE	Engine module
2	DEF SUPPLY MODULE	DEF supply module
3	DEF TANK HEATER VALVE	DEF tank heater valve
4	AMBIENT AIR TEMPERATURE SWITCH	Ambient air temperature switch
5	DEF TANK LEVEL/TEMP	DEF tank level/temperature
6	DOSING VALVE	Dosing valve
--	DEF PRESS SENSOR GND	DEF pressure sensor ground
--	PUMP MOTOR GND	Pump motor ground
--	PUMP MOTOR TEMP	Pump motor temperature
--	AMBIENT TEMP GND	Ambient temperature ground

10.5.75 Code SA 00 SPN 4792 FMI 14

SCR catalyst over temperature.

Diagnosis and solution

1. Clear the error log.
2. Restart the engine module.
3. If the fault code shows again during the next driving cycle, check the following.
4. Make sure the engine air filter is good.
5. Check the boost pressure level and for possible leaks in the pressure pipes.
6. Check the exhaust temperature sensors harness. Make sure the connections are good and the contacts are clean.

10.5.76 Code SA 00 SPN 521000 FMI 02

DEF pump temperature signal duty cycle is in invalid range.

Diagnosis and solution

1. Clear the error log.
2. Restart the engine module.
3. If the fault code shows again during the next driving cycle, check the following.
4. Check the DEF supply module harness. Make sure the connections are good and the contacts are clean.
5. Replace the DEF supply module. If the system is correct and the fault code is not active, the original DEF supply module is bad.

10.5.76.1 DEF electrical schematic

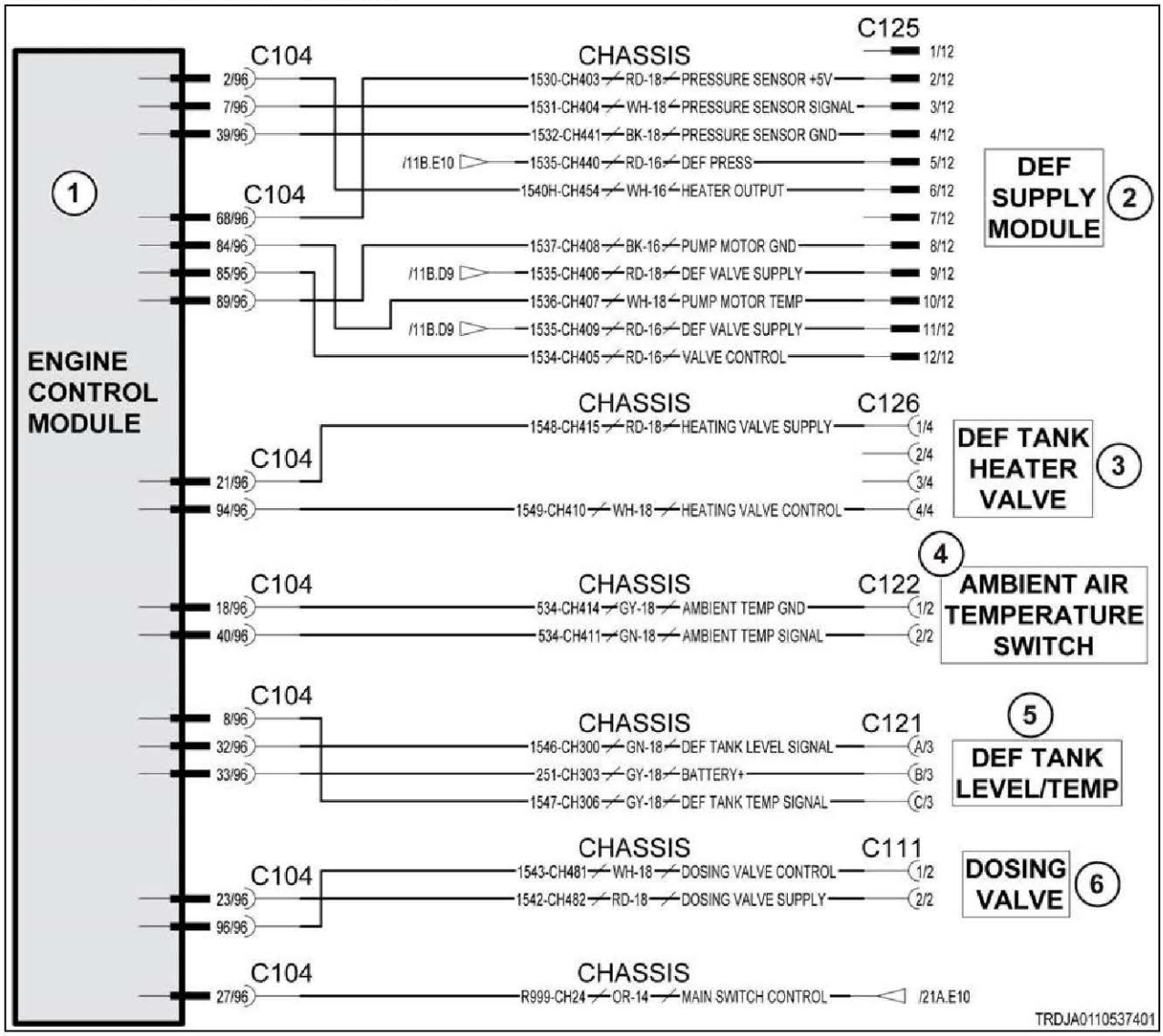

Fig. 106

Schematic legend		
Item	**Schematic term**	**Description**
1	ENGINE CONTROL MODULE	Engine module
2	DEF SUPPLY MODULE	DEF supply module
3	DEF TANK HEATER VALVE	DEF tank heater valve
4	AMBIENT AIR TEMPERATURE SWITCH	Ambient air temperature switch
5	DEF TANK LEVEL/TEMP	DEF tank level/temperature
6	DOSING VALVE	Dosing valve
--	DEF PRESS SENSOR GND	DEF pressure sensor ground
--	PUMP MOTOR GND	Pump motor ground
--	PUMP MOTOR TEMP	Pump motor temperature
--	AMBIENT TEMP GND	Ambient temperature ground

10.5.77 Code SA 00 SPN 521000 FMI 08

DEF pump temperature signal duty cycle is in failure range.

Diagnosis and solution

1. Clear the error log.
2. Restart the engine module.
3. If the fault code shows again during the next driving cycle, check the following.
4. Check the DEF supply module harness. Make sure the connections are good and the contacts are clean.
5. Replace the DEF supply module. If the system is correct and the fault code is not active, the original DEF supply module is bad.

10.5.77.1 DEF electrical schematic

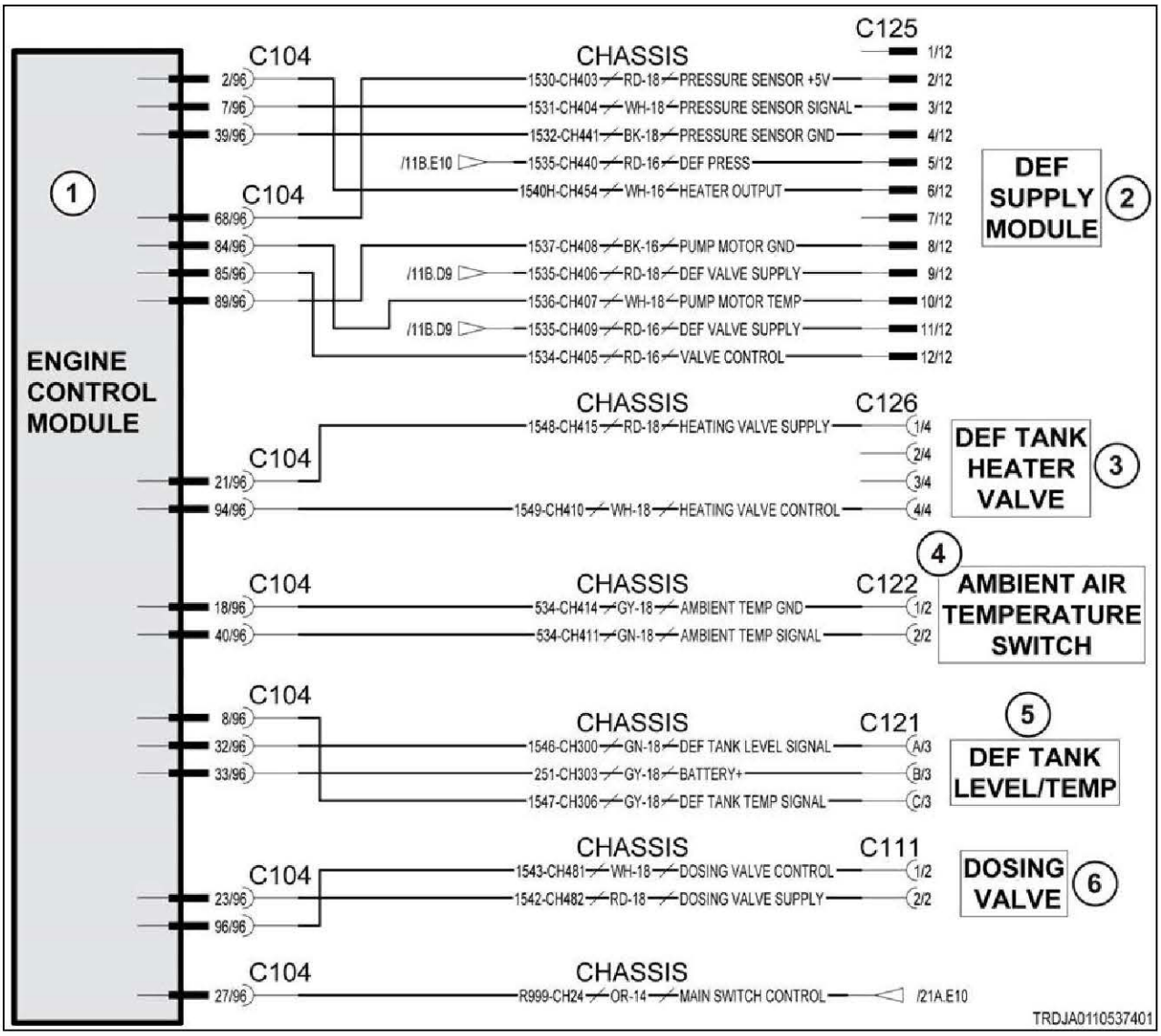

Fig. 107

Schematic legend		
Item	Schematic term	Description
1	ENGINE CONTROL MODULE	Engine module
2	DEF SUPPLY MODULE	DEF supply module
3	DEF TANK HEATER VALVE	DEF tank heater valve
4	AMBIENT AIR TEMPERATURE SWITCH	Ambient air temperature switch
5	DEF TANK LEVEL/TEMP	DEF tank level/temperature
6	DOSING VALVE	Dosing valve
--	DEF PRESS SENSOR GND	DEF pressure sensor ground
--	PUMP MOTOR GND	Pump motor ground
--	PUMP MOTOR TEMP	Pump motor temperature
--	AMBIENT TEMP GND	Ambient temperature ground

10.5.78 Code SA 00 SPN 521001 FMI 03

Short circuit on DEF heater main relay.

Diagnosis and solution

1. Clear the error log.
2. Restart the engine module.
3. If the fault code shows again during the next driving cycle, check the following.
4. Check the DEF heater main relay harness. Make sure the connections are good and the contacts are clean.
5. Replace the DEF heater main relay. If the system is correct and the fault code is not active, the original DEF heater main relay is bad.

10.5.78.1 DEF electrical schematic

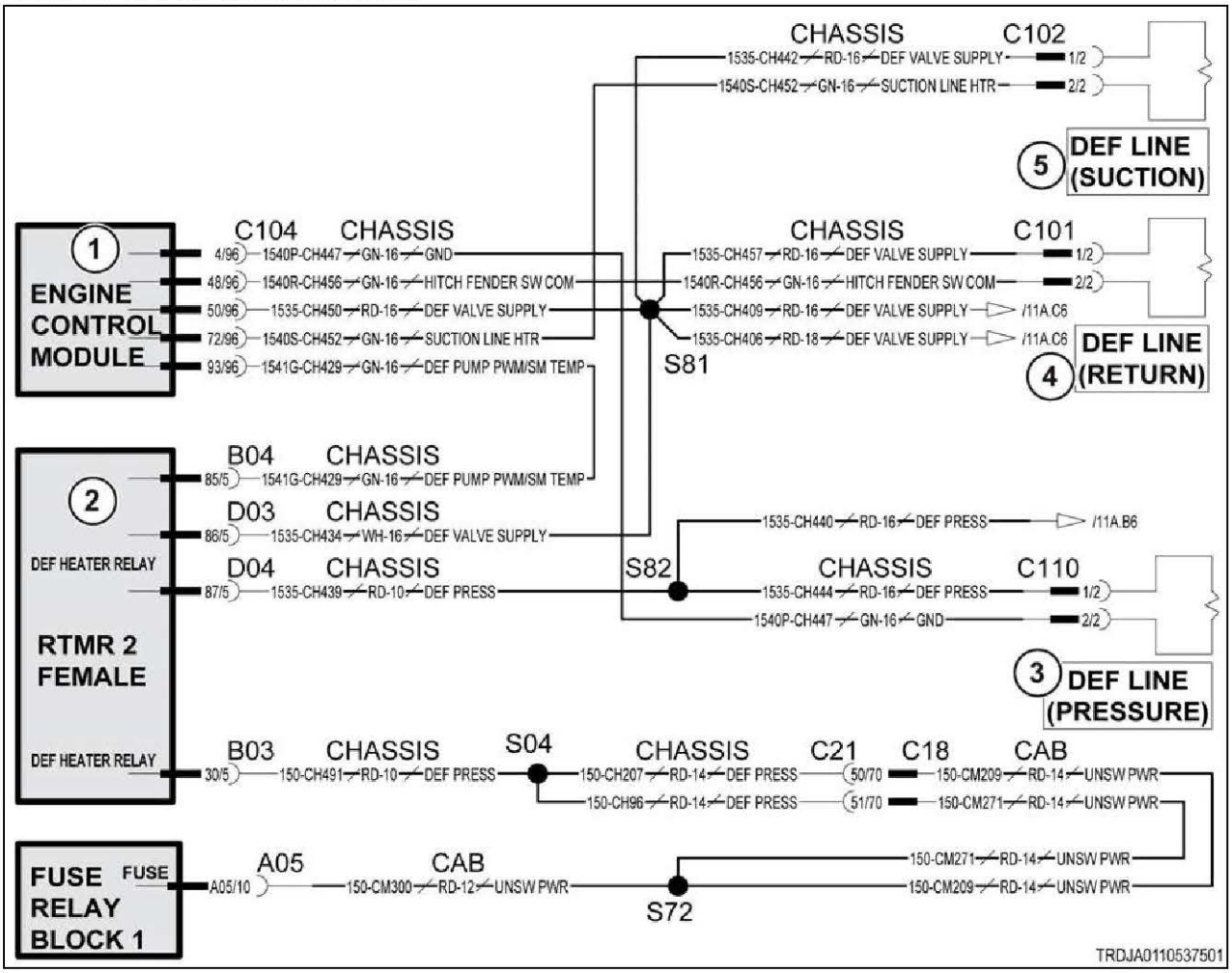

Fig. 108

Schematic legend		
Item	**Schematic term**	**Description**
1	ENGINE CONTROL MODULE	Engine module
2	RTMR 2 FEMALE	Rear terminal mini-fuse relay 2 female
3	DEF LINE (PRESSURE)	DEF pressure line
4	DEF LINE (RETURN)	DEF return line
5	DEF LINE (SUCTION)	DEF suction line
--	SUCTION LINE HTR	DEF suction line heater
--	HITCH FENDER SW COM	Hitch fender switch common
--	DEF PUMP PWM/SM TEMP	DEF pump pulse width modulation/supply module temperature
--	DEF PRESS	DEF pressure
--	UNSW PWR	Unswitched power

10.5.79 Code SA 00 SPN 521001 FMI 04

Open circuit on DEF heater main relay.

Diagnosis and solution

1. Clear the error log.
2. Restart the engine module.
3. If the fault code shows again during the next driving cycle, check the following.
4. Check the DEF heater main relay harness. Make sure the connections are good and the contacts are clean.
5. Replace the DEF heater main relay. If the system is correct and the fault code is not active, the original DEF heater main relay is bad.

10.5.79.1 DEF electrical schematic

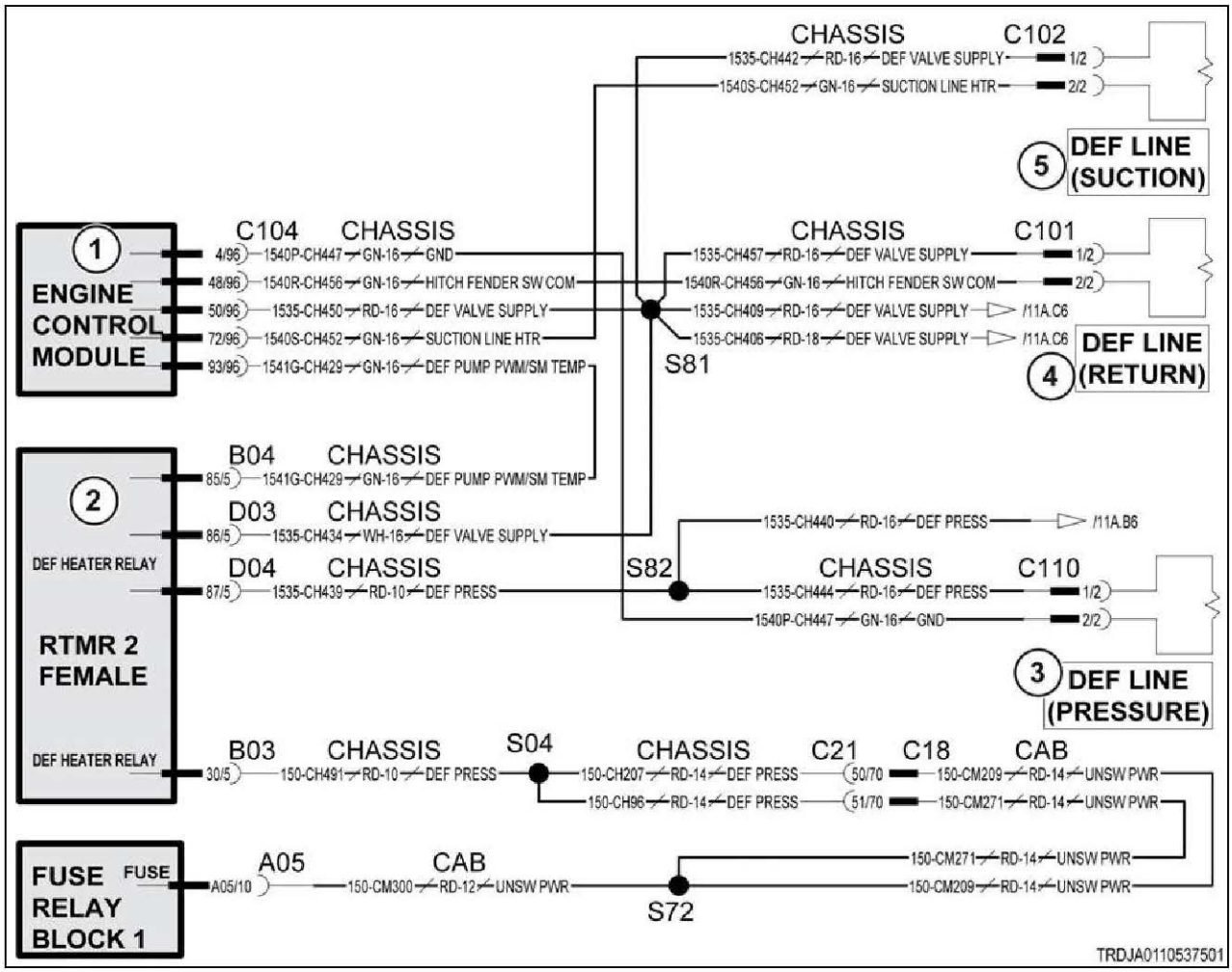

Fig. 109

Schematic legend		
Item	**Schematic term**	**Description**
1	ENGINE CONTROL MODULE	Engine module
2	RTMR 2 FEMALE	Rear terminal mini-fuse relay 2 female
3	DEF LINE (PRESSURE)	DEF pressure line

Schematic legend		
Item	Schematic term	Description
4	DEF LINE (RETURN)	DEF return line
5	DEF LINE (SUCTION)	DEF suction line
--	SUCTION LINE HTR	DEF suction line heater
--	HITCH FENDER SW COM	Hitch fender switch common
--	DEF PUMP PWM/SM TEMP	DEF pump pulse width modulation/supply module temperature
--	DEF PRESS	DEF pressure
--	UNSW PWR	Unswitched power

10.5.80 Code SA 00 SPN 521001 FMI 31

DEF heater main relay engine module power stage over temperature.

Diagnosis and solution

1. Clear the error log.
2. Restart the engine module.
3. If the fault code shows again during the next driving cycle, check the following.
4. Check the DEF heater main relay harness. Make sure the connections are good and the contacts are clean.
5. Replace the DEF heater main relay. If the system is correct and the fault code is not active, the original DEF heater main relay is bad.
6. Replace the engine module. If the system is correct and the fault code is not active, the original engine module is bad.

10.5.80.1 DEF electrical schematic

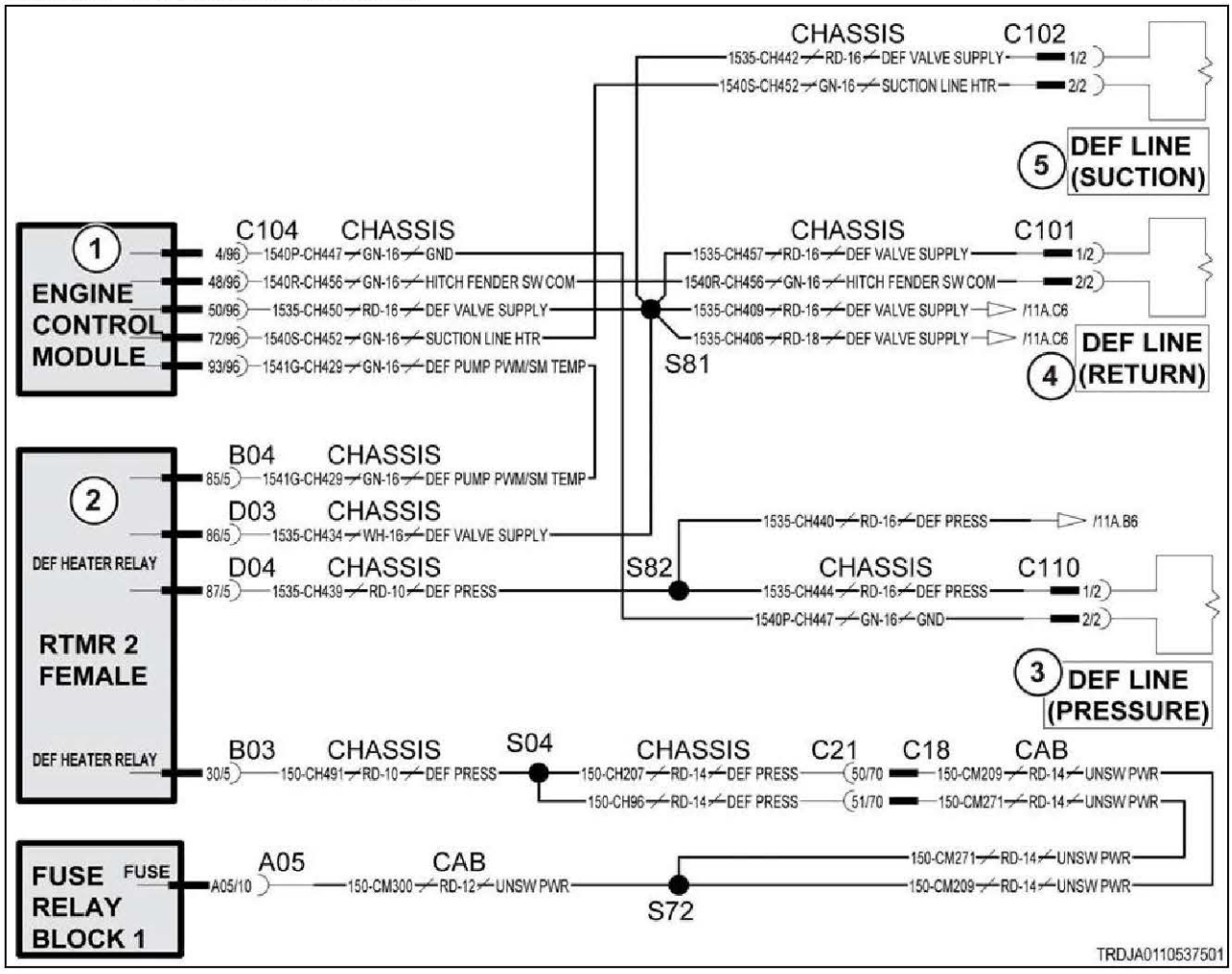

Fig. 110

Schematic legend		
Item	**Schematic term**	**Description**
1	ENGINE CONTROL MODULE	Engine module
2	RTMR 2 FEMALE	Rear terminal mini-fuse relay 2 female
3	DEF LINE (PRESSURE)	DEF pressure line
4	DEF LINE (RETURN)	DEF return line
5	DEF LINE (SUCTION)	DEF suction line
--	SUCTION LINE HTR	DEF suction line heater
--	HITCH FENDER SW COM	Hitch fender switch common
--	DEF PUMP PWM/SM TEMP	DEF pump pulse width modulation/supply module temperature
--	DEF PRESS	DEF pressure
--	UNSW PWR	Unswitched power

10.5.81 Code SA 00 SPN 521002 FMI 03

DEF pump direction valve high side short circuit to high source.

Diagnosis and solution

1. Clear the error log.
2. Restart the engine module.
3. If the fault code shows again during the next driving cycle, check the following.
4. Check the DEF supply module harness. Make sure the connections are good and the contacts are clean.
5. Replace the DEF supply module. If the system is correct and the fault code is not active, the original DEF supply module is bad.
6. Replace the engine module. If the system is correct and the fault code is not active, the original engine module is bad.

10.5.81.1 DEF electrical schematic

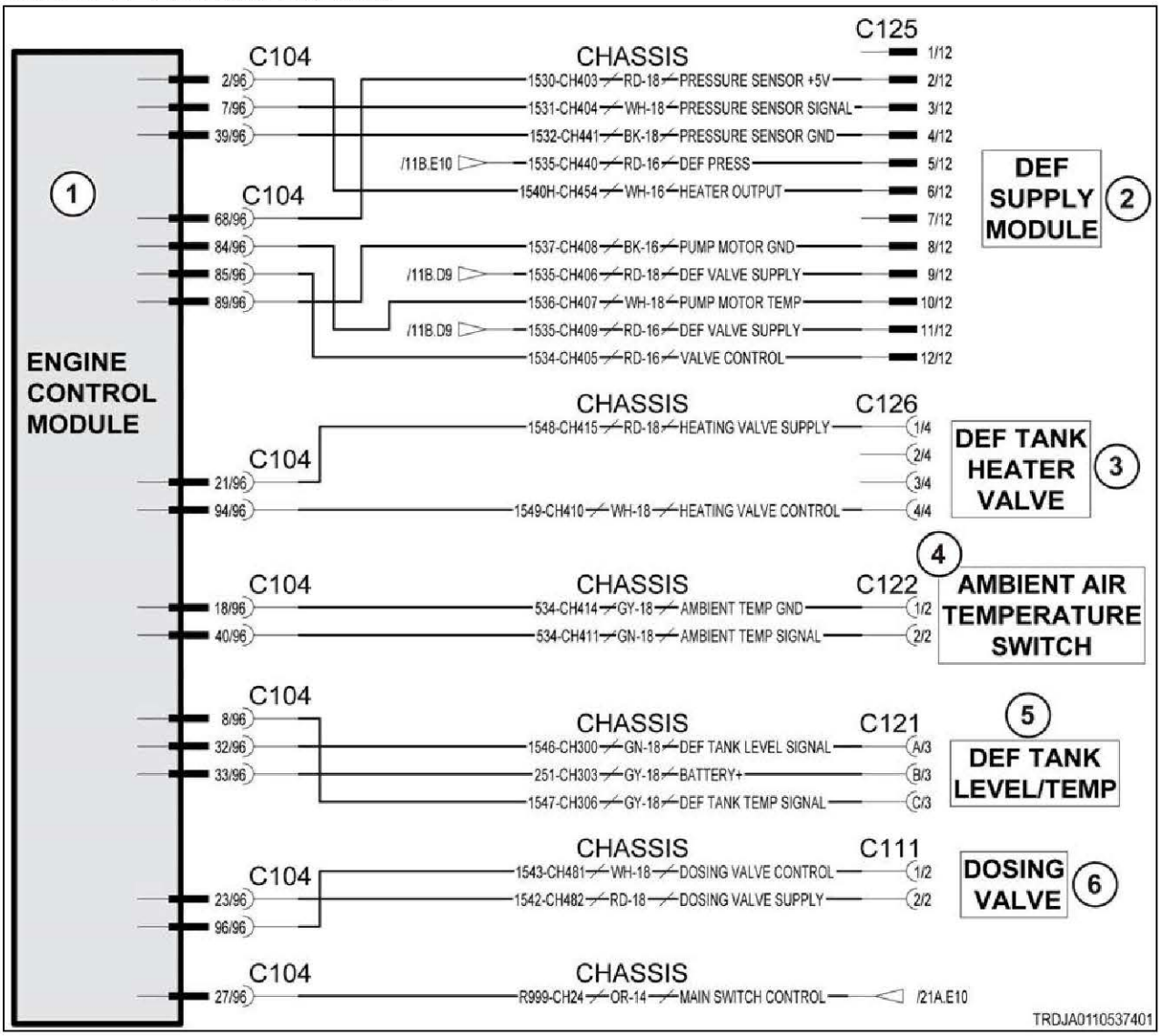

Fig. 111

Schematic legend		
Item	Schematic term	Description
1	ENGINE CONTROL MODULE	Engine module
2	DEF SUPPLY MODULE	DEF supply module
3	DEF TANK HEATER VALVE	DEF tank heater valve
4	AMBIENT AIR TEMPERATURE SWITCH	Ambient air temperature switch
5	DEF TANK LEVEL/TEMP	DEF tank level/temperature
6	DOSING VALVE	Dosing valve
--	DEF PRESS SENSOR GND	DEF pressure sensor ground
--	PUMP MOTOR GND	Pump motor ground
--	PUMP MOTOR TEMP	Pump motor temperature
--	AMBIENT TEMP GND	Ambient temperature ground

10.5.82 Code SA 00 SPN 521002 FMI 04

DEF pump direction valve high side short circuit to ground.

Diagnosis and solution

1. Clear the error log.
2. Restart the engine module.
3. If the fault code shows again during the next driving cycle, check the following.
4. Check the DEF supply module harness. Make sure the connections are good and the contacts are clean.
5. Replace the DEF supply module. If the system is correct and the fault code is not active, the original DEF supply module is bad.

10.5.82.1 DEF electrical schematic

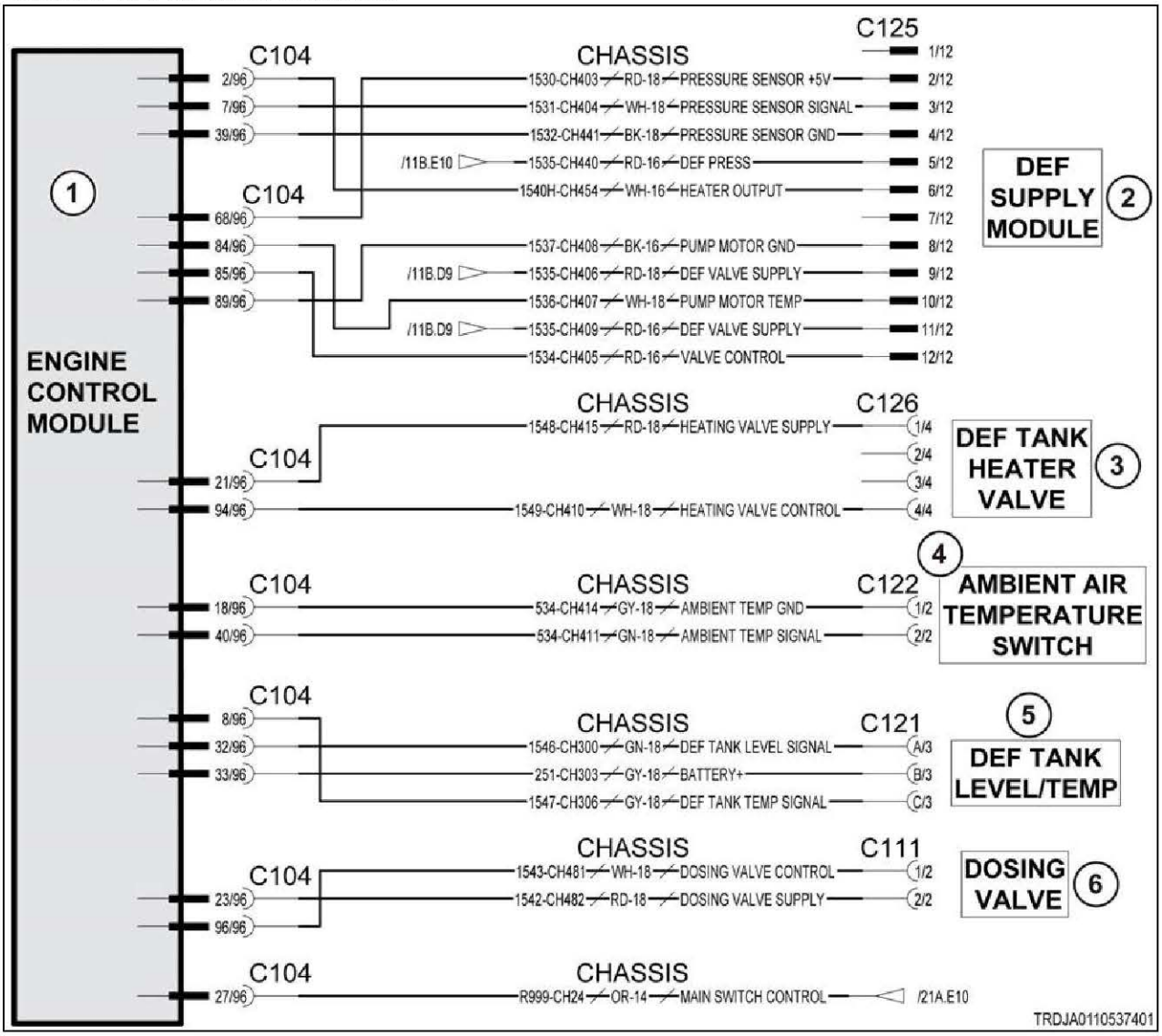

Fig. 112

Schematic legend		
Item	**Schematic term**	**Description**
1	ENGINE CONTROL MODULE	Engine module
2	DEF SUPPLY MODULE	DEF supply module
3	DEF TANK HEATER VALVE	DEF tank heater valve
4	AMBIENT AIR TEMPERATURE SWITCH	Ambient air temperature switch
5	DEF TANK LEVEL/TEMP	DEF tank level/temperature
6	DOSING VALVE	Dosing valve
--	DEF PRESS SENSOR GND	DEF pressure sensor ground
--	PUMP MOTOR GND	Pump motor ground
--	PUMP MOTOR TEMP	Pump motor temperature
--	AMBIENT TEMP GND	Ambient temperature ground

10.5.83 Code SA 00 SPN 521002 FMI 05

DEF pump direction valve high side current below normal or open circuit.

Diagnosis and solution

1. Clear the error log.
2. Restart the engine module.
3. If the fault code shows again during the next driving cycle, check the following.
4. Check the DEF supply module harness. Make sure the connections are good and the contacts are clean.
5. Replace the DEF supply module. If the system is correct and the fault code is not active, the original DEF supply module is bad.

10.5.83.1 DEF electrical schematic

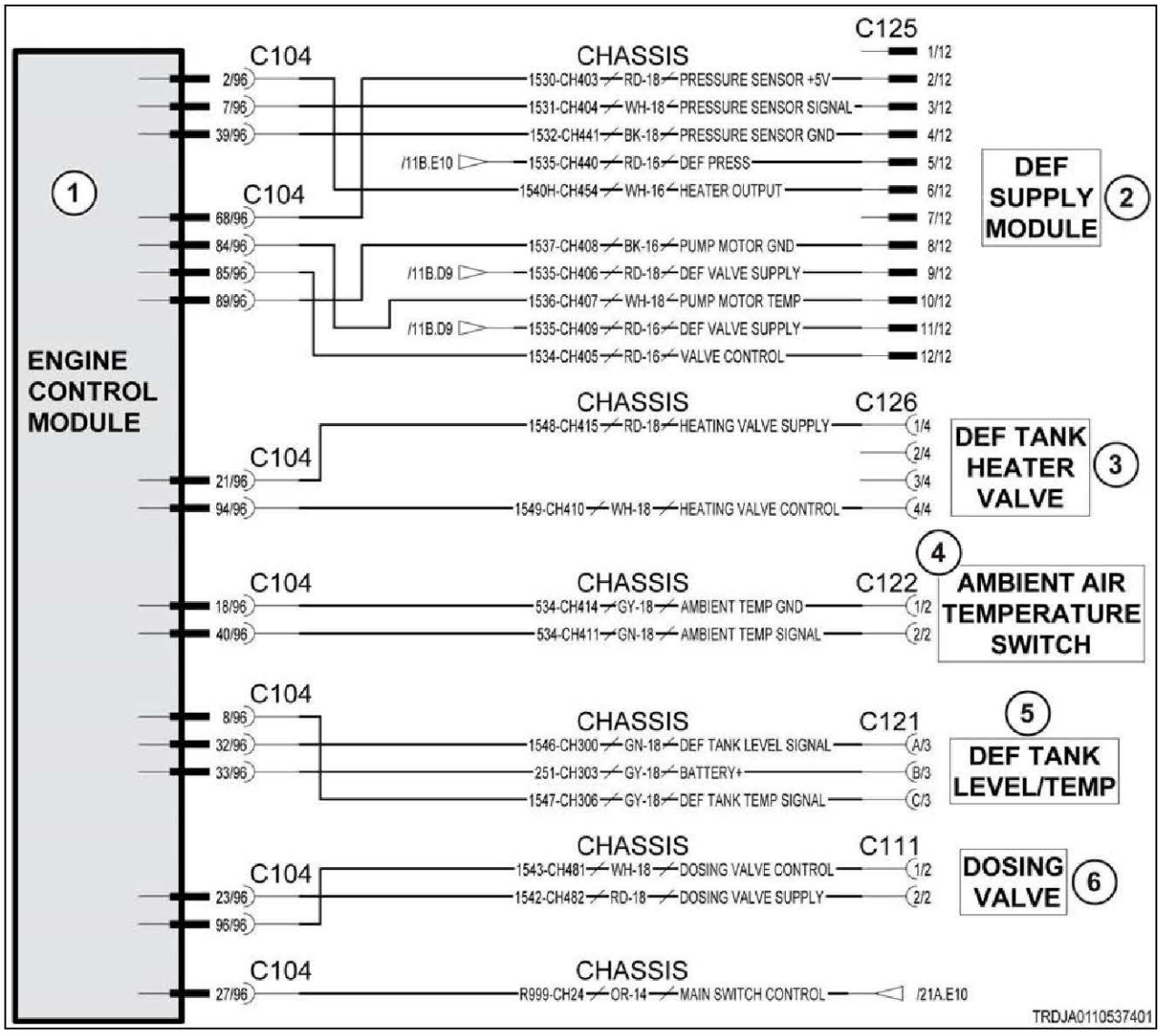

Fig. 113

Schematic legend		
Item	**Schematic term**	**Description**
1	ENGINE CONTROL MODULE	Engine module
2	DEF SUPPLY MODULE	DEF supply module
3	DEF TANK HEATER VALVE	DEF tank heater valve
4	AMBIENT AIR TEMPERATURE SWITCH	Ambient air temperature switch
5	DEF TANK LEVEL/TEMP	DEF tank level/temperature
6	DOSING VALVE	Dosing valve
--	DEF PRESS SENSOR GND	DEF pressure sensor ground
--	PUMP MOTOR GND	Pump motor ground
--	PUMP MOTOR TEMP	Pump motor temperature
--	AMBIENT TEMP GND	Ambient temperature ground

10.5.84 Code SA 00 SPN 521002 FMI 31

DEF pump direction valve high side engine module power stage over temperature.

Diagnosis and solution

1. Clear the error log.
2. Restart the engine module.
3. If the fault code shows again during the next driving cycle, check the following.
4. Check the DEF supply module harness. Make sure the connections are good and the contacts are clean.
5. Replace the DEF supply module. If the system is correct and the fault code is not active, the original DEF supply module is bad.
6. Replace the engine module. If the system is correct and the fault code is not active, the original engine module is bad.

10.5.84.1 DEF electrical schematic

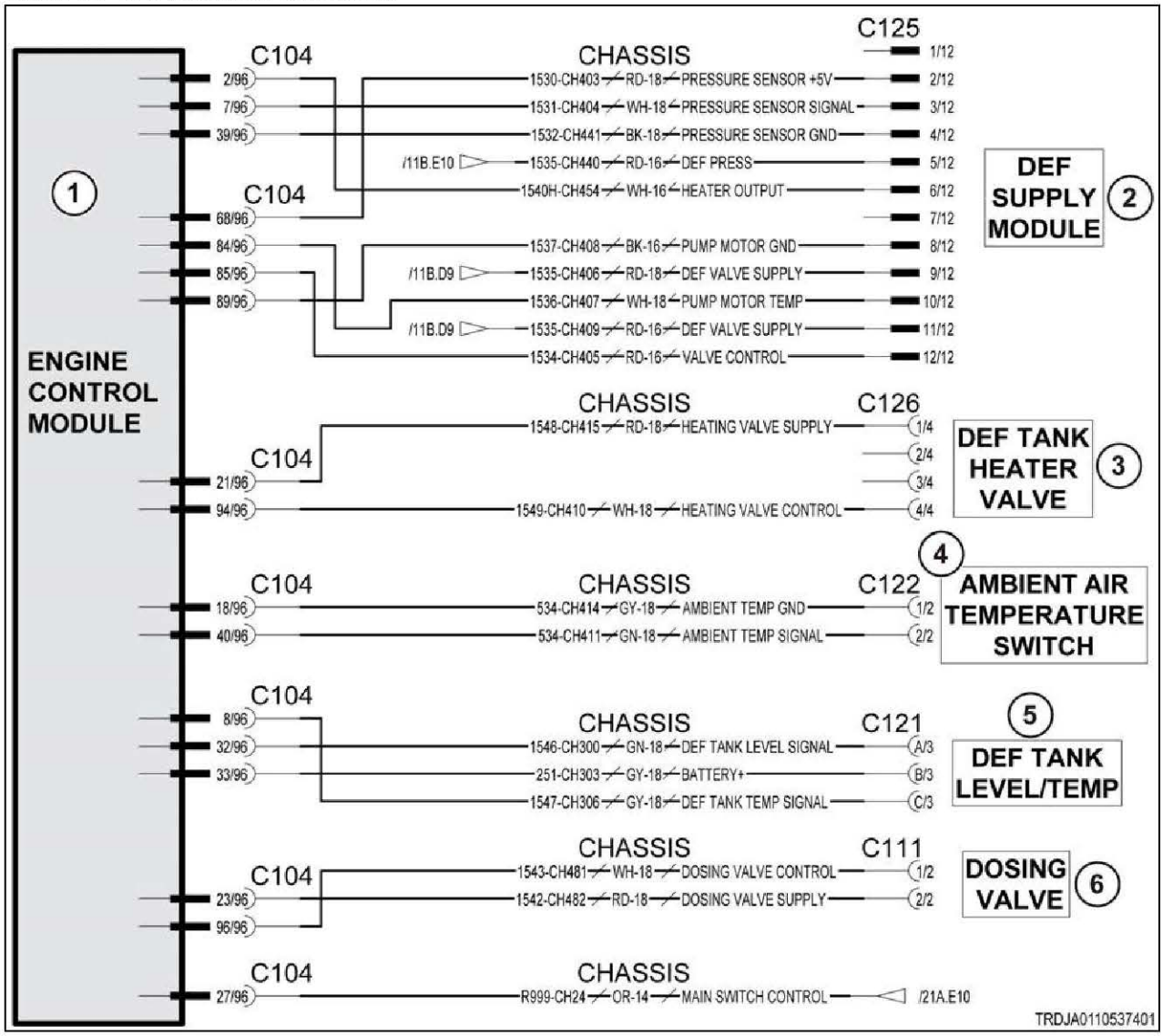

Fig. 114

Schematic legend		
Item	**Schematic term**	**Description**
1	ENGINE CONTROL MODULE	Engine module
2	DEF SUPPLY MODULE	DEF supply module
3	DEF TANK HEATER VALVE	DEF tank heater valve
4	AMBIENT AIR TEMPERATURE SWITCH	Ambient air temperature switch
5	DEF TANK LEVEL/TEMP	DEF tank level/temperature
6	DOSING VALVE	Dosing valve
--	DEF PRESS SENSOR GND	DEF pressure sensor ground
--	PUMP MOTOR GND	Pump motor ground
--	PUMP MOTOR TEMP	Pump motor temperature
--	AMBIENT TEMP GND	Ambient temperature ground

10.5.85 Code SA 00 SPN 521003 FMI 03

Short circuit on DEF heater main relay control circuit.

Diagnosis and solution

1. Clear the error log.
2. Restart the engine module.
3. If the fault code shows again during the next driving cycle, check the following.
4. Check the DEF heater main relay harness. Make sure the connections are good and the contacts are clean.
5. Replace the DEF heater main relay. If the system is correct and the fault code is not active, the original DEF heater main relay is bad.

10.5.85.1 DEF electrical schematic

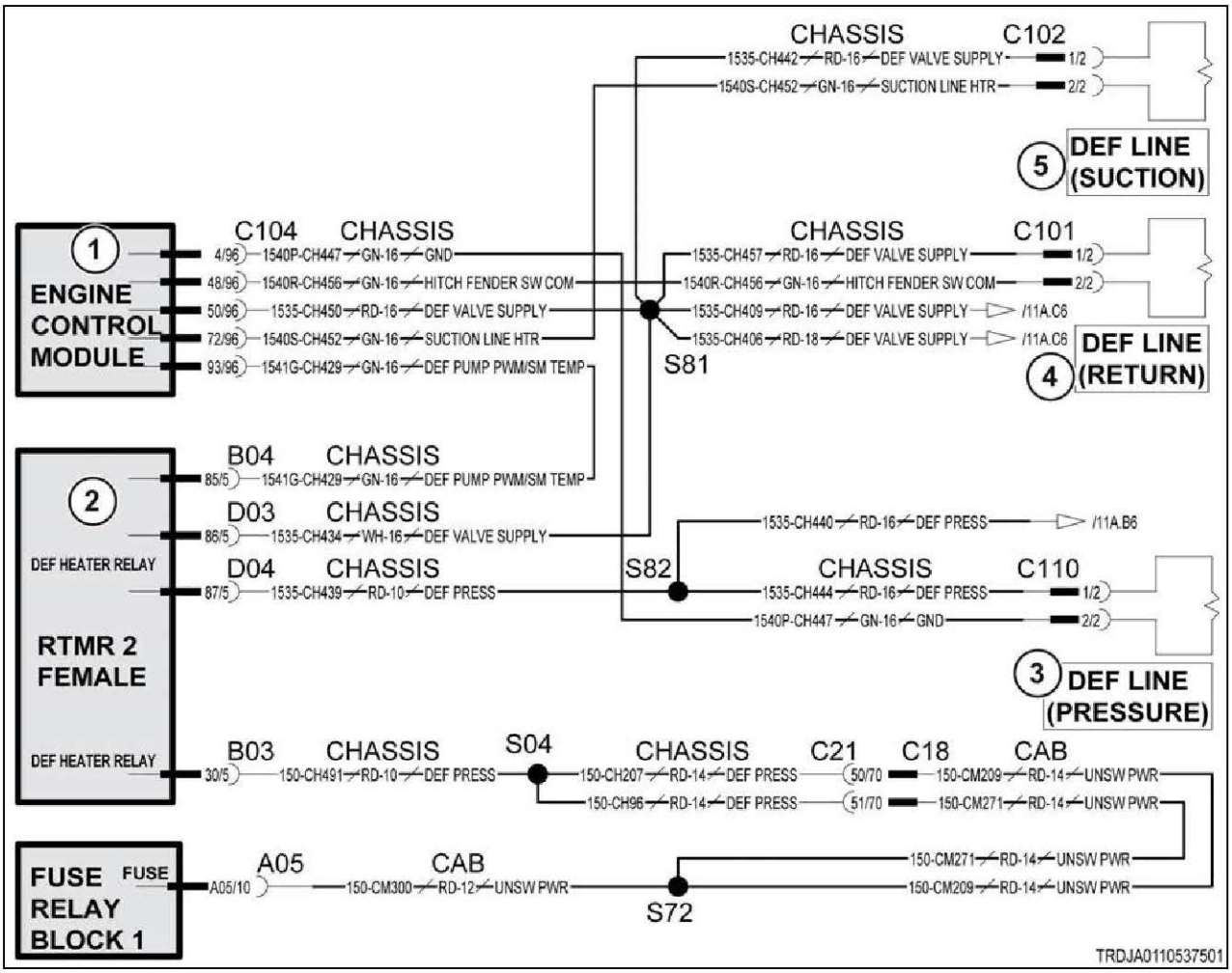

Fig. 115

Schematic legend		
Item	**Schematic term**	**Description**
1	ENGINE CONTROL MODULE	Engine module
2	RTMR 2 FEMALE	Rear terminal mini-fuse relay 2 female
3	DEF LINE (PRESSURE)	DEF pressure line

Schematic legend		
Item	**Schematic term**	**Description**
4	DEF LINE (RETURN)	DEF return line
5	DEF LINE (SUCTION)	DEF suction line
--	SUCTION LINE HTR	DEF suction line heater
--	HITCH FENDER SW COM	Hitch fender switch common
--	DEF PUMP PWM/SM TEMP	DEF pump pulse width modulation/supply module temperature
--	DEF PRESS	DEF pressure
--	UNSW PWR	Unswitched power

10.5.86 Code SA 00 SPN 521003 FMI 04

Short circuit on DEF heater main relay control circuit.

Diagnosis and solution

1. Clear the error log.
2. Restart the engine module.
3. If the fault code shows again during the next driving cycle, check the following.
4. Check the DEF heater main relay harness. Make sure the connections are good and the contacts are clean.
5. Replace the DEF heater main relay. If the system is correct and the fault code is not active, the original DEF heater main relay is bad.

10.5.86.1 DEF electrical schematic

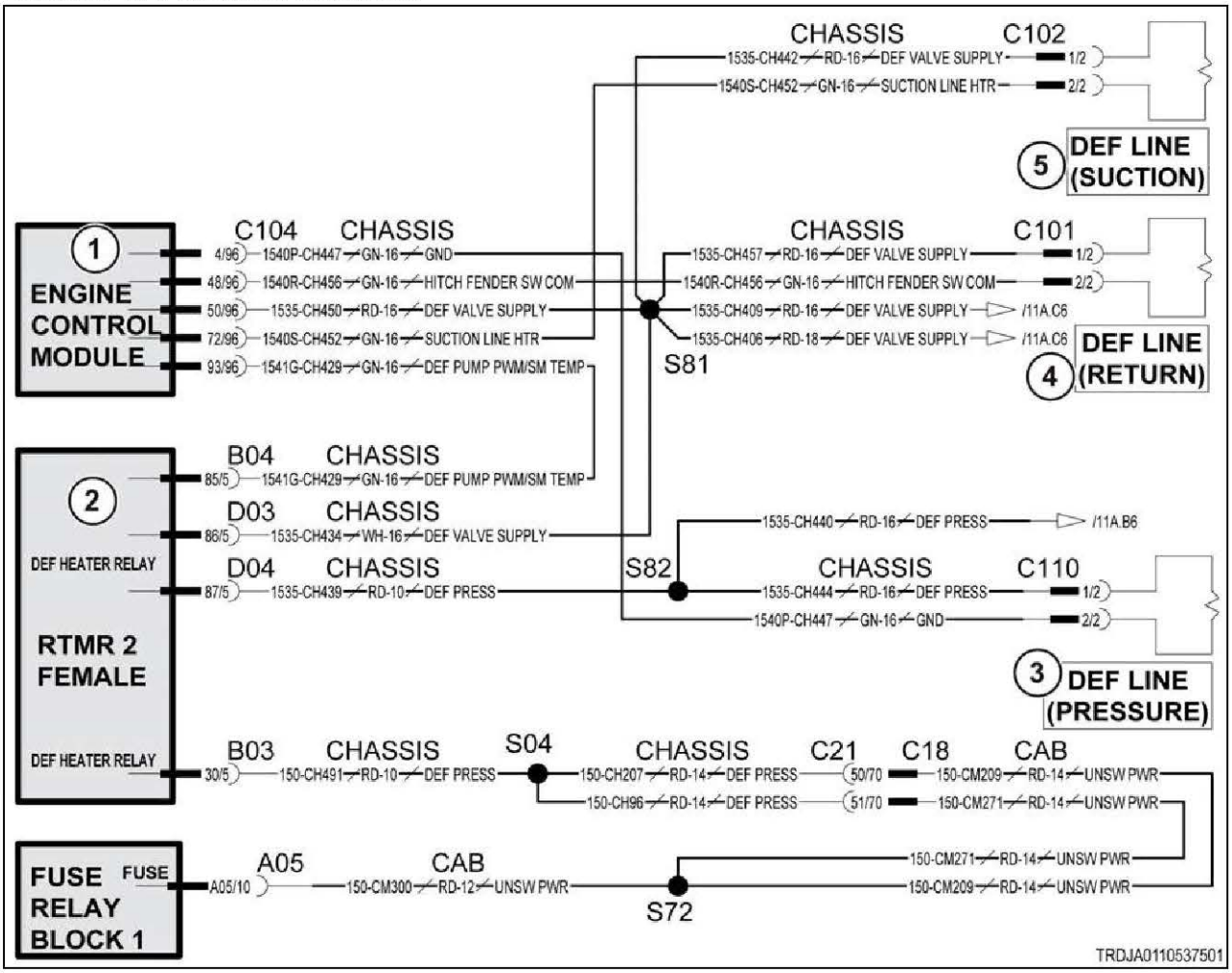

Fig. 116

Schematic legend		
Item	**Schematic term**	**Description**
1	ENGINE CONTROL MODULE	Engine module
2	RTMR 2 FEMALE	Rear terminal mini-fuse relay 2 female
3	DEF LINE (PRESSURE)	DEF pressure line
4	DEF LINE (RETURN)	DEF return line
5	DEF LINE (SUCTION)	DEF suction line
--	SUCTION LINE HTR	DEF suction line heater
--	HITCH FENDER SW COM	Hitch fender switch common
--	DEF PUMP PWM/SM TEMP	DEF pump pulse width modulation/supply module temperature
--	DEF PRESS	DEF pressure
--	UNSW PWR	Unswitched power

10.5.87 Code SA 00 SPN 521004 FMI 02

Downstream NOx sensor plausibility test failed.

Diagnosis and solution

1. Clear the error log.
2. Restart the engine module.
3. If the fault code shows again during the next driving cycle, check the following.
4. Make sure the downstream NOx assembly is installed correctly.
5. Replace the downstream NOx sensor. If the system is correct and the fault code is not active, the original downstream NOx sensor is bad.

10.5.87.1 NOx sensor electrical schematic

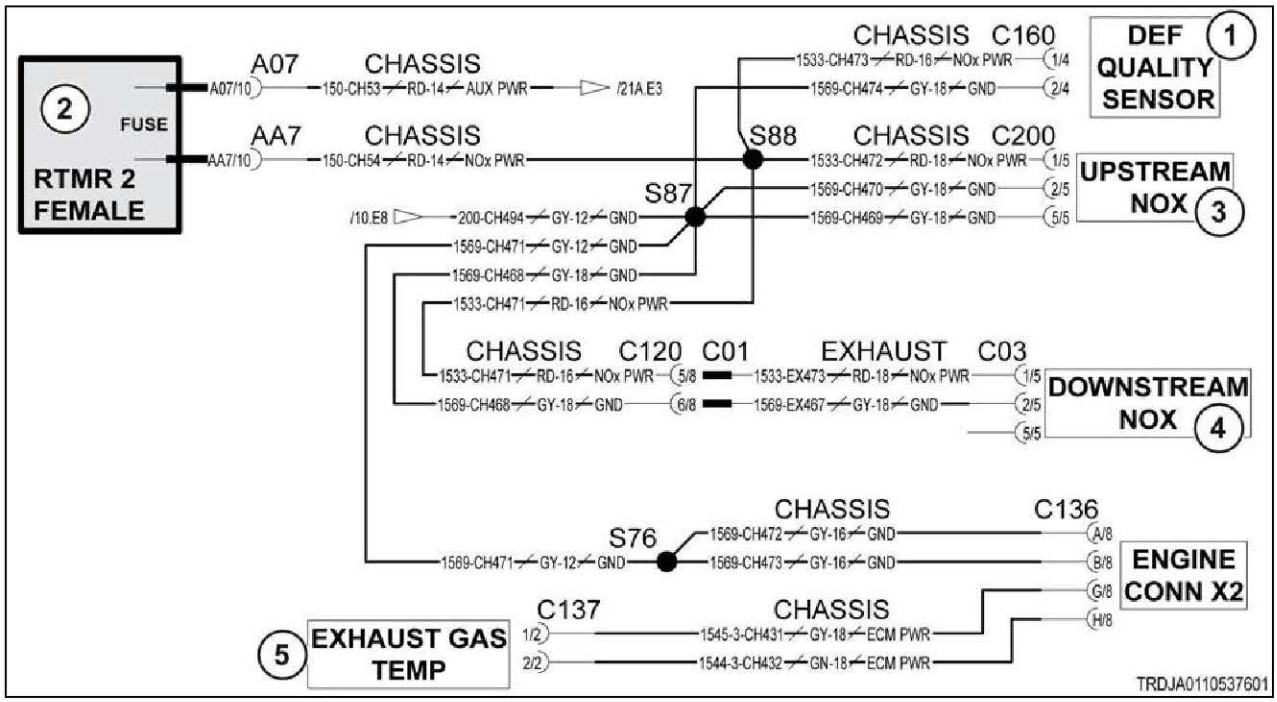

Fig. 117

Schematic legend		
Item	**Schematic term**	**Description**
1	DEF QUALITY SENSOR	DEF quality sensor
2	RTMR 2 FEMALE	Rear terminal mini-fuse relay 2 female
3	UPSTREAM NOX	Upstream NOx
4	DOWNSTREAM NOX	Downstream NOx
5	EXHAUST GAS TEMP	Exhaust gas temperature
--	GND	Ground
--	NOX PWR	NOx sensor power
--	AUX PWR	Auxiliary power
--	ECM PWR	Module power
--	ENGINE CONN X2	Engine connector

10.5.88 Code SA 00 SPN 521004 FMI 11

Cannot detect downstream NOx sensor.

Diagnosis and solution

1. Clear the error log.
2. Restart the engine module.
3. If the fault code shows again during the next driving cycle, check the following.
4. Check the downstream NOx sensor harness. Make sure the connections are good and the contacts are clean.
5. Replace the downstream NOx sensor. If the system is correct and the fault code is not active, the original downstream NOx sensor is bad.

10.5.88.1 NOx sensor electrical schematic

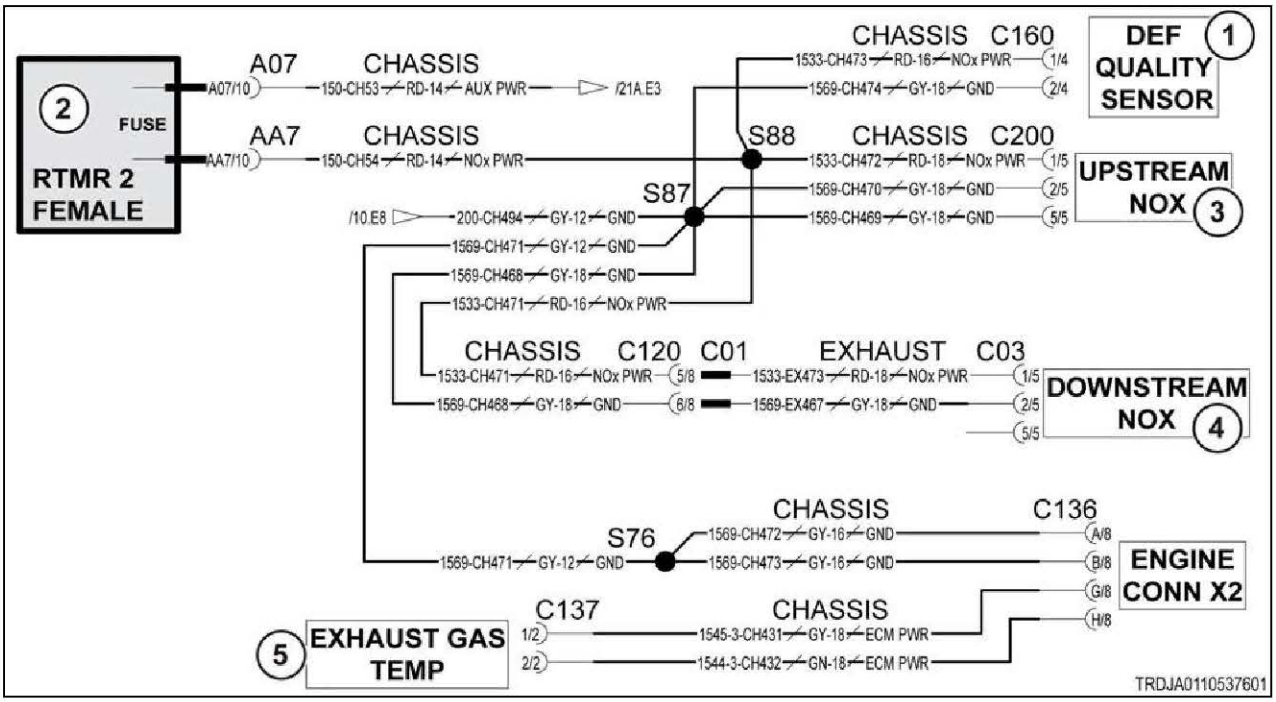

Fig. 118

Schematic legend		
Item	**Schematic term**	**Description**
1	DEF QUALITY SENSOR	DEF quality sensor
2	RTMR 2 FEMALE	Rear terminal mini-fuse relay 2 female
3	UPSTREAM NOX	Upstream NOx
4	DOWNSTREAM NOX	Downstream NOx
5	EXHAUST GAS TEMP	Exhaust gas temperature
--	GND	Ground
--	NOX PWR	NOx sensor power
--	AUX PWR	Auxiliary power
--	ECM PWR	Module power
--	ENGINE CONN X2	Engine connector

10.5.89 Code SA 00 SPN 521004 FMI 12

Downstream NOx sensor stability time exceeded.

Diagnosis and solution

1. Clear the error log.
2. Restart the engine module.
3. If the fault code shows again during the next driving cycle, check the following.
4. Make sure the downstream NOx assembly is installed correctly.
5. Replace the downstream NOx sensor. If the system is correct and the fault code is not active, the original downstream NOx sensor is bad.

10.5.89.1 NOx sensor electrical schematic

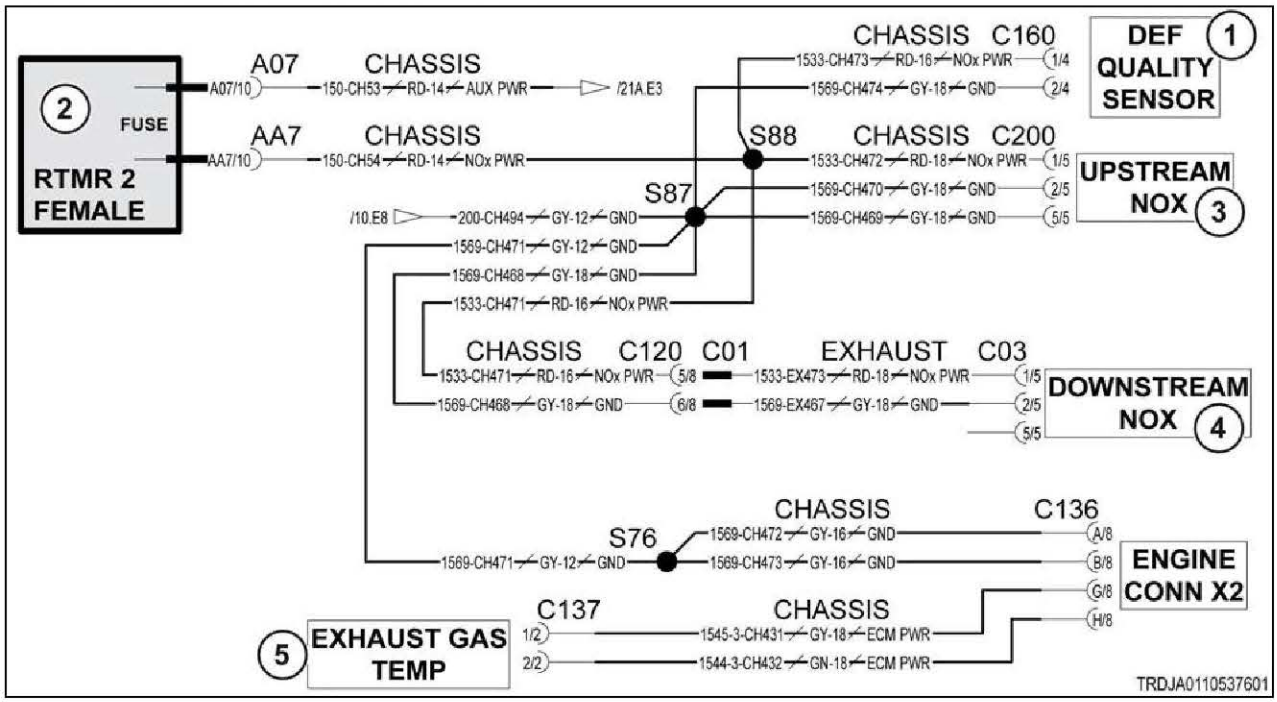

Fig. 119

Schematic legend		
Item	**Schematic term**	**Description**
1	DEF QUALITY SENSOR	DEF quality sensor
2	RTMR 2 FEMALE	Rear terminal mini-fuse relay 2 female
3	UPSTREAM NOX	Upstream NOx
4	DOWNSTREAM NOX	Downstream NOx
5	EXHAUST GAS TEMP	Exhaust gas temperature
--	GND	Ground
--	NOX PWR	NOx sensor power
--	AUX PWR	Auxiliary power
--	ECM PWR	Module power
--	ENGINE CONN X2	Engine connector

10.5.90 Code SA 00 SPN 521004 FMI 14

Downstream NOx sensor supply voltage is out of normal operating range.

Diagnosis and solution

1. Clear the error log.
2. Restart the engine module.
3. If the fault code shows again during the next driving cycle, check the following.
4. Check the downstream NOx sensor harness. Make sure the connections are good and the contacts are clean.
5. Check the alternator operation.
6. Check the voltage converter operation, if equipped.
7. Replace the downstream NOx sensor. If the system is correct and the fault code is not active, the original downstream NOx sensor is bad.

10.5.90.1 NOx sensor electrical schematic

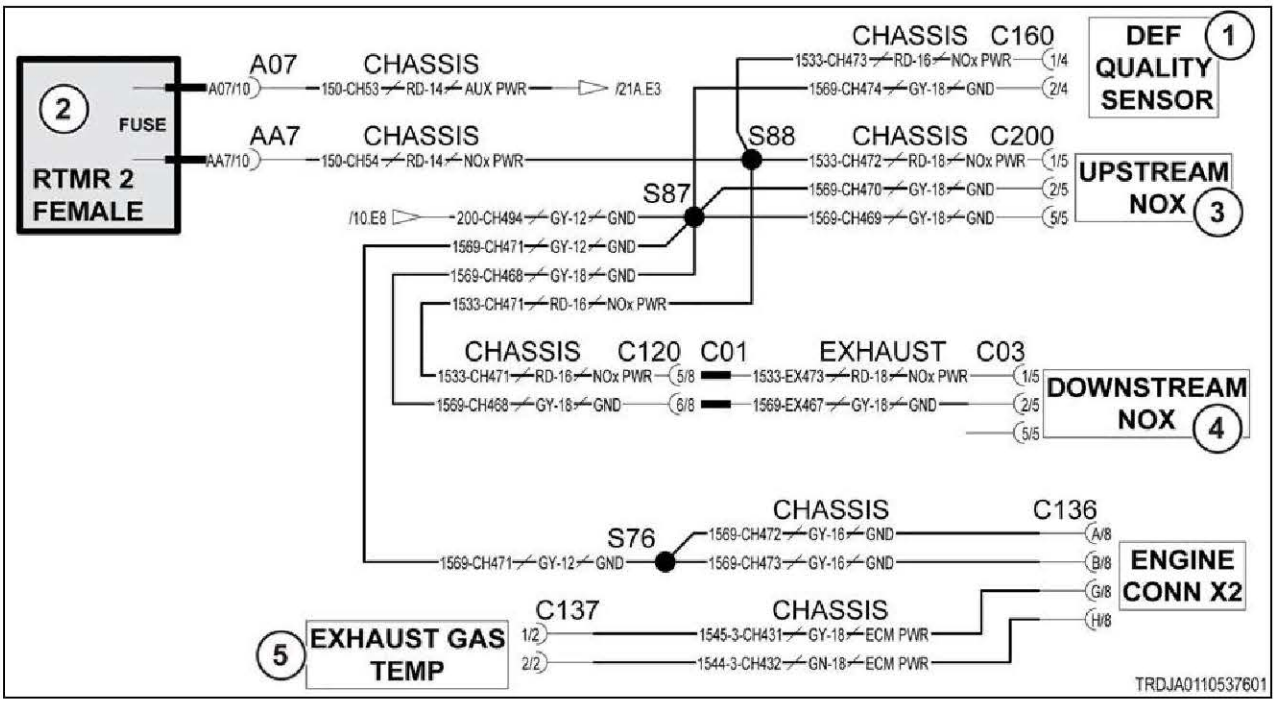

Fig. 120

Schematic legend		
Item	**Schematic term**	**Description**
1	DEF QUALITY SENSOR	DEF quality sensor
2	RTMR 2 FEMALE	Rear terminal mini-fuse relay 2 female
3	UPSTREAM NOX	Upstream NOx
4	DOWNSTREAM NOX	Downstream NOx
5	EXHAUST GAS TEMP	Exhaust gas temperature
--	GND	Ground
--	NOX PWR	NOx sensor power

Schematic legend		
Item	Schematic term	Description
--	AUX PWR	Auxiliary power
--	ECM PWR	Module power
--	ENGINE CONN X2	Engine connector

10.5.91 Code SA 00 SPN 521005 FMI 02

Upstream NOx sensor plausibility test failed.

Diagnosis and solution

1. Clear the error log.
2. Restart the engine module.
3. If the fault code shows again during the next driving cycle, check the following.
4. Make sure the upstream NOx assembly is installed correctly.
5. Replace the upstream NOx sensor. If the system is correct and the fault code is not active, the original upstream NOx sensor is bad.

10.5.91.1 NOx sensor electrical schematic

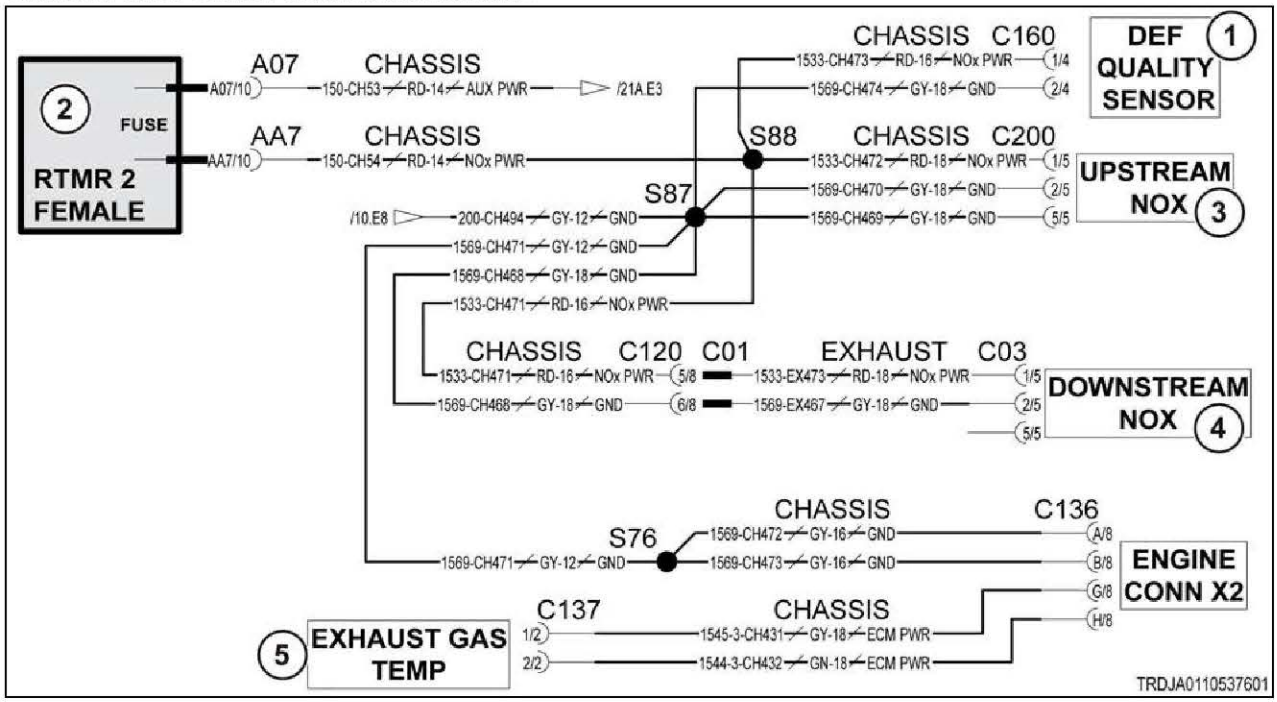

Fig. 121

Schematic legend		
Item	Schematic term	Description
1	DEF QUALITY SENSOR	DEF quality sensor
2	RTMR 2 FEMALE	Rear terminal mini-fuse relay 2 female
3	UPSTREAM NOX	Upstream NOx
4	DOWNSTREAM NOX	Downstream NOx
5	EXHAUST GAS TEMP	Exhaust gas temperature

Schematic legend		
Item	Schematic term	Description
--	GND	Ground
--	NOX PWR	NOx sensor power
--	AUX PWR	Auxiliary power
--	ECM PWR	Module power
--	ENGINE CONN X2	Engine connector

10.5.92 Code SA 00 SPN 521005 FMI 11

Cannot detect upstream NOx sensor.

Diagnosis and solution

1. Clear the error log.
2. Restart the engine module.
3. If the fault code shows again during the next driving cycle, check the following.
4. Check the upstream NOx sensor harness. Make sure the connections are good and the contacts are clean.
5. Replace the upstream NOx sensor. If the system is correct and the fault code is not active, the original upstream NOx sensor is bad.

10.5.92.1 NOx sensor electrical schematic

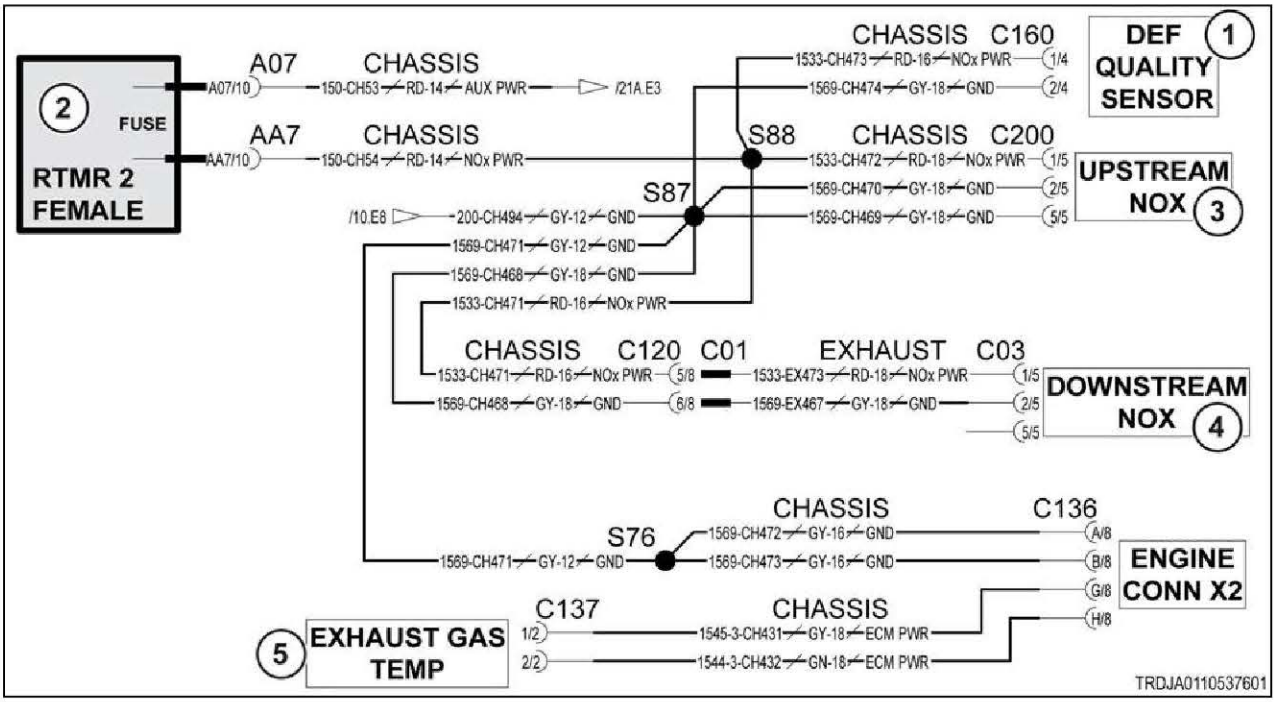

Fig. 122

Schematic legend		
Item	Schematic term	Description
1	DEF QUALITY SENSOR	DEF quality sensor
2	RTMR 2 FEMALE	Rear terminal mini-fuse relay 2 female
3	UPSTREAM NOX	Upstream NOx

Schematic legend		
Item	**Schematic term**	**Description**
4	DOWNSTREAM NOX	Downstream NOx
5	EXHAUST GAS TEMP	Exhaust gas temperature
--	GND	Ground
--	NOX PWR	NOx sensor power
--	AUX PWR	Auxiliary power
--	ECM PWR	Module power
--	ENGINE CONN X2	Engine connector

10.5.93 Code SA 00 SPN 521005 FMI 12

Upstream NOx sensor stability time exceeded.

Diagnosis and solution

1. Clear the error log.
2. Restart the engine module.
3. If the fault code shows again during the next driving cycle, check the following.
4. Make sure the upstream NOx assembly is installed correctly.
5. Replace the upstream NOx sensor. If the system is correct and the fault code is not active, the original upstream NOx sensor is bad.

10.5.93.1 NOx sensor electrical schematic

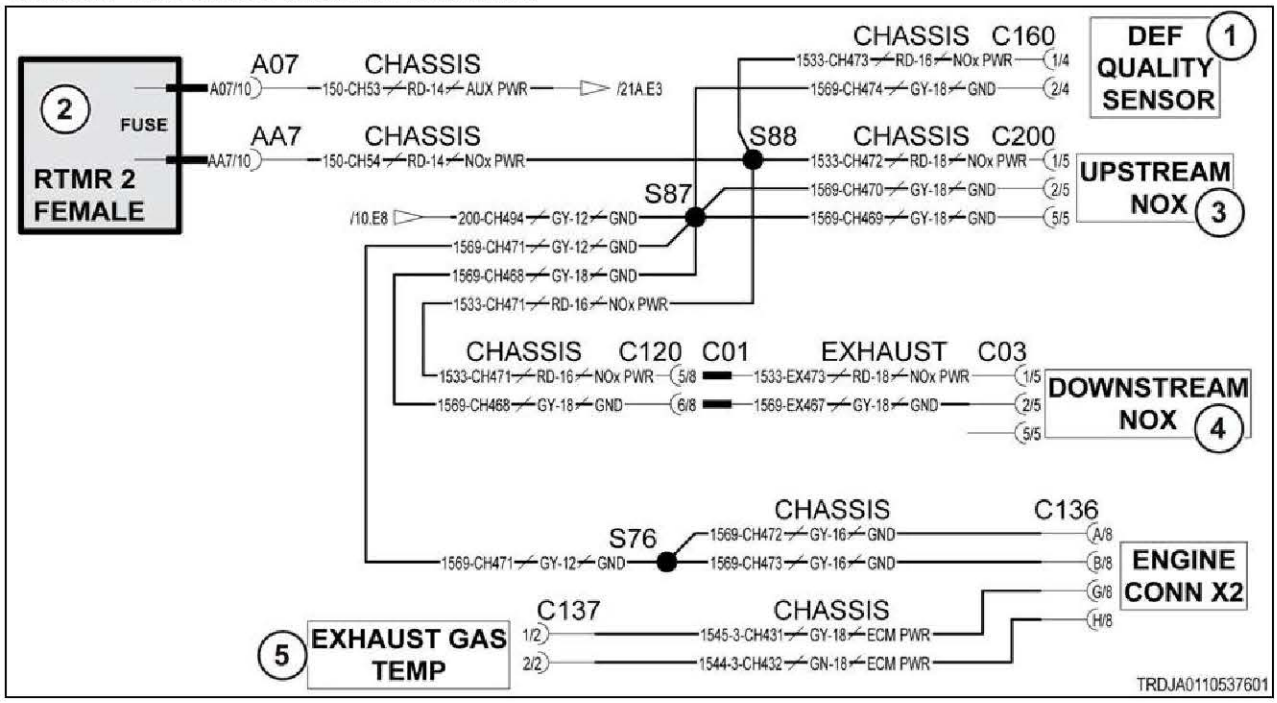

Fig. 123

Schematic legend		
Item	**Schematic term**	**Description**
1	DEF QUALITY SENSOR	DEF quality sensor
2	RTMR 2 FEMALE	Rear terminal mini-fuse relay 2 female
3	UPSTREAM NOX	Upstream NOx
4	DOWNSTREAM NOX	Downstream NOx
5	EXHAUST GAS TEMP	Exhaust gas temperature
--	GND	Ground
--	NOX PWR	NOx sensor power
--	AUX PWR	Auxiliary power
--	ECM PWR	Module power
--	ENGINE CONN X2	Engine connector

10.5.94 Code SA 00 SPN 521005 FMI 14

Upstream NOx sensor supply voltage is out of normal operating range.

Diagnosis and solution

1. Clear the error log.
2. Restart the engine module.
3. If the fault code shows again during the next driving cycle, check the following.
4. Check the upstream NOx sensor harness. Make sure the connections are good and the contacts are clean.
5. Check the alternator operation.
6. Check the voltage converter operation, if equipped.
7. Replace the upstream NOx sensor. If the system is correct and the fault code is not active, the original upstream NOx sensor is bad.

10.5.94.1 NOx sensor electrical schematic

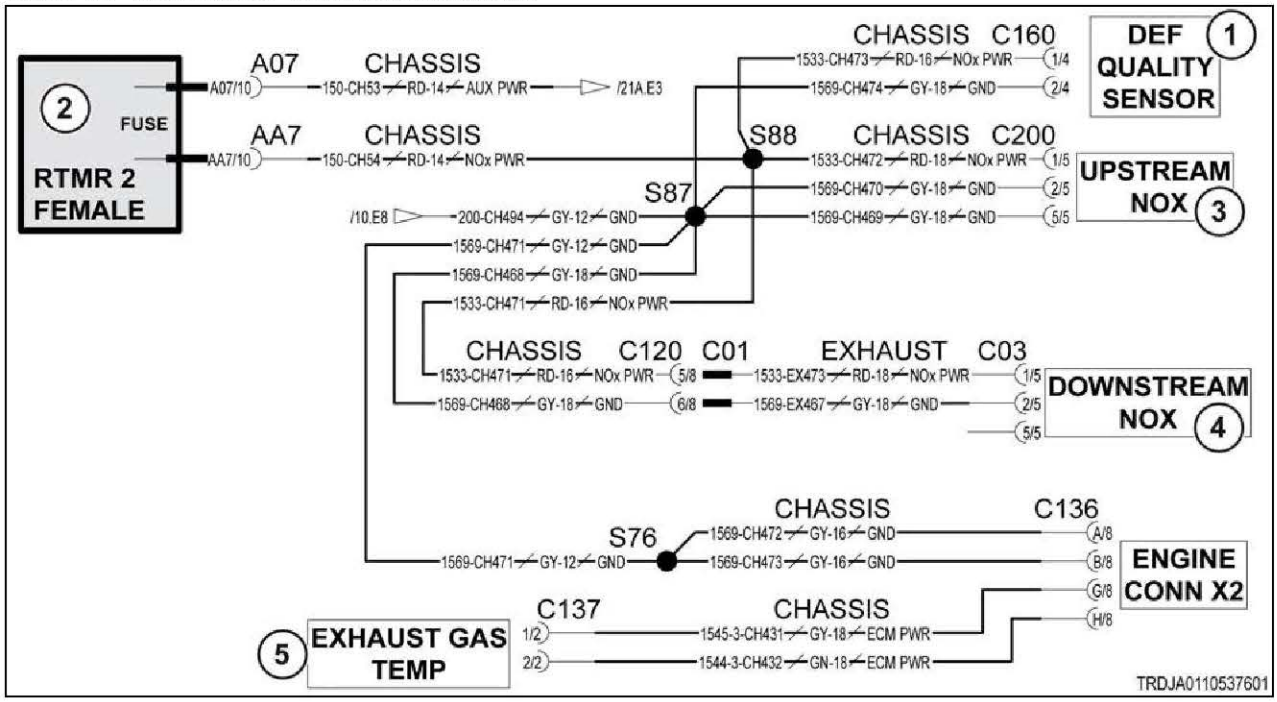

Fig. 124

Schematic legend		
Item	**Schematic term**	**Description**
1	DEF QUALITY SENSOR	DEF quality sensor
2	RTMR 2 FEMALE	Rear terminal mini-fuse relay 2 female
3	UPSTREAM NOX	Upstream NOx
4	DOWNSTREAM NOX	Downstream NOx
5	EXHAUST GAS TEMP	Exhaust gas temperature
--	GND	Ground
--	NOX PWR	NOx sensor power
--	AUX PWR	Auxiliary power
--	ECM PWR	Module power
--	ENGINE CONN X2	Engine connector

10.5.95 Code SA 00 SPN 521006 FMI 12

NOx conversion plausibility test failed.

Diagnosis and solution

1. Clear the error log.
2. Restart the engine module.
3. If the fault code shows again during the next driving cycle, check the following.
4. Change the DEF supply module main filter.
5. Check the DEF quality.
6. Check the DEF dosing valve visually and with the service tool test function.

7. Check the DEF pressure line hose and the connector. Make sure there is no obstruction.
8. Remove the DEF dosing valve and check the mounting boss condition.
9. Check the SCR system catalyst condition.

10.5.96 Code SA 00 SPN 521007 FMI 10

SCR system error. DEF backflow line blocked or implausible.

Diagnosis and solution

1. Clear the error log.
2. Restart the engine module.
3. If the fault code shows again during the next driving cycle, check the following.
4. Check the backflow line for any mechanical failure.
5. Change the DEF supply module main filter and the backflow connector.
6. Check the DEF for contamination and change if necessary.
7. Replace the DEF supply module. If the system is correct and the fault code is not active, the original DEF supply module is bad.

10.5.97 Code SA 00 SPN 521007 FMI 14

SCR system error. DEF pressure line or dosing valve blocked.

Diagnosis and solution

1. Clear the error log.
2. Restart the engine module.
3. If the fault code shows again during the next driving cycle, check the following.
4. Check the DEF pressure line hose and the connector. Make sure there is no obstruction.
5. Change the DEF supply module main filter.
6. Check the DEF system for any leaks.
7. Check the DEF for contamination and change if necessary.
8. Check the DEF dosing valve visually and with the service tool test function.
9. Remove the DEF dosing valve and check the nozzle for obstruction.
10. Replace the DEF supply module. If the system is correct and the fault code is not active, the original DEF supply module is bad.

10.5.98 Code SA 00 SPN 521007 FMI 31

SCR system error. DEF pressure stabilization failure.

Diagnosis and solution

1. Clear the error log.
2. Restart the engine module.
3. If the fault code shows again during the next driving cycle, check the following.
4. Change the DEF supply module backflow connector.
5. Change the DEF supply module main filter.
6. Check the DEF system for any leaks.

7. Check the DEF for contamination and change if necessary.
8. Replace the DEF supply module. If the system is correct and the fault code is not active, the original DEF supply module is bad.

10.5.99 Code SA 00 SPN 521008 FMI 00

SCR system failure. DEF pressure reduction failure.

Diagnosis and solution

1. Clear the error log.
2. Restart the engine module.
3. If the fault code shows again during the next driving cycle, check the following.
4. Change the DEF supply module main filter.
5. Check the DEF supply module inlet connector. Make sure there is no obstruction.
6. Check the DEF inlet hose for possible mechanical failure.
7. Remove the DEF inlet hose. Check the DEF inlet hose for obstruction.
8. Check the DEF for contamination and change if necessary.
9. Replace the DEF supply module. If the system is correct and the fault code is not active, the original DEF supply module is bad.

10.5.100 Code SA 00 SPN 521008 FMI 01

SCR system error. DEF pressure buildup failure.

Diagnosis and solution

1. Clear the error log.
2. Restart the engine module.
3. If the fault code shows again during the next driving cycle, check the following.
4. Check the SCR system for any leaks.
5. Check the DEF tank level and the outlet connector.
6. Check the DEF tank breather and the filter condition.
7. Change the DEF supply module main filter.
8. Check the DEF supply module inlet connector and the inlet hose. Make sure there is no obstruction.
9. Check the DEF for contamination and change if necessary.
10. Replace the DEF supply module. If the system is correct and the fault code is not active, the original DEF supply module is bad.

10.6 03 Transmission

10.6.1 Code SA 03 SPN 96 FMI 03

The module has detected that the voltage signal for the fuel level sensor is too high.

The transmission module has detected higher than expected voltage from the fuel level sensors. The most likely cause is an open circuit, such as a disconnected sensor, connector, or a faulty sensor.

Diagnosis and solution

1. Check the control and the harness.

a) Turn the key start switch to the on position.
b) Turn the battery disconnect switch to the on position.
c) Check the voltage between the J1 connector contact 52 and the J1 connector contact 12.

Result

Expected results - the voltage is between 4.5 volts and 8.0 volts.

Results:

- Yes - the voltage is between 4.5 volts and 8.0 volts.
- No - the voltage is not between 4.5 volts and 8.0 volts.

2. Check the harness for open circuit.

a) Turn the key start switch to the off position.
b) Turn the battery disconnect switch to the off position.
c) Remove the key from the battery disconnect switch.
d) Disconnect the fuel sensor.
e) Disconnect the J1 and J2 connectors from the module.
f) Put a jumper from contact 1 to contact 2 on the fuel sensor harness connector.
g) Check the resistance from connector J1 contact 52 and connector J1 contact 12.

Result

Expected results - the resistance is less than 5 ohms.

Results:

- Yes - the resistance is less than 5 ohms.
- No - the resistance is not less than 5 ohms.

  The harness is bad.

  Repair: Repair or replace the harness.

3. Check the harness for short-circuit.

a) Turn the key start switch to the off position.
b) Turn the battery disconnect switch to the off position.
c) Remove the key from the battery disconnect switch.
d) Disconnect the fuel sensor.
e) Disconnect the J1 and J2 connectors from the module.
f) Check the resistance between connector J1 contact 52 and all other connector J1 and J2 connector contacts.

Result

Expected results - the resistance is more than 5000 ohms.

Results:

- Yes - the resistance is more than 5000 ohms.

- No - the resistance is not more than 5000 ohms.

  The harness is bad.

  Repair: Repair or replace the harness.

4. Check if the diagnostic code remains.

a) Check the contacts of the connectors and clean the contacts.
b) Connect all the connectors.
c) Turn the battery disconnect switch to the on position.
d) Turn the key start switch to the on position.
e) Turn on the engine.
f) Operate the engine at high idle.
g) Check if the diagnostic code remains.

Result

Expected result - the diagnostic code is not active.

Results:

- Yes - SPN 96 FMI 03 is not active.

  Stop.
- No - SPN 96 FMI 03 is active.

  Failure of the transmission module is possible but not common. Exit the procedure and do the procedure again. If the diagnostic code remains active, replace the module.

  Stop.

10.6.1.1 Fuel level sender electrical schematic

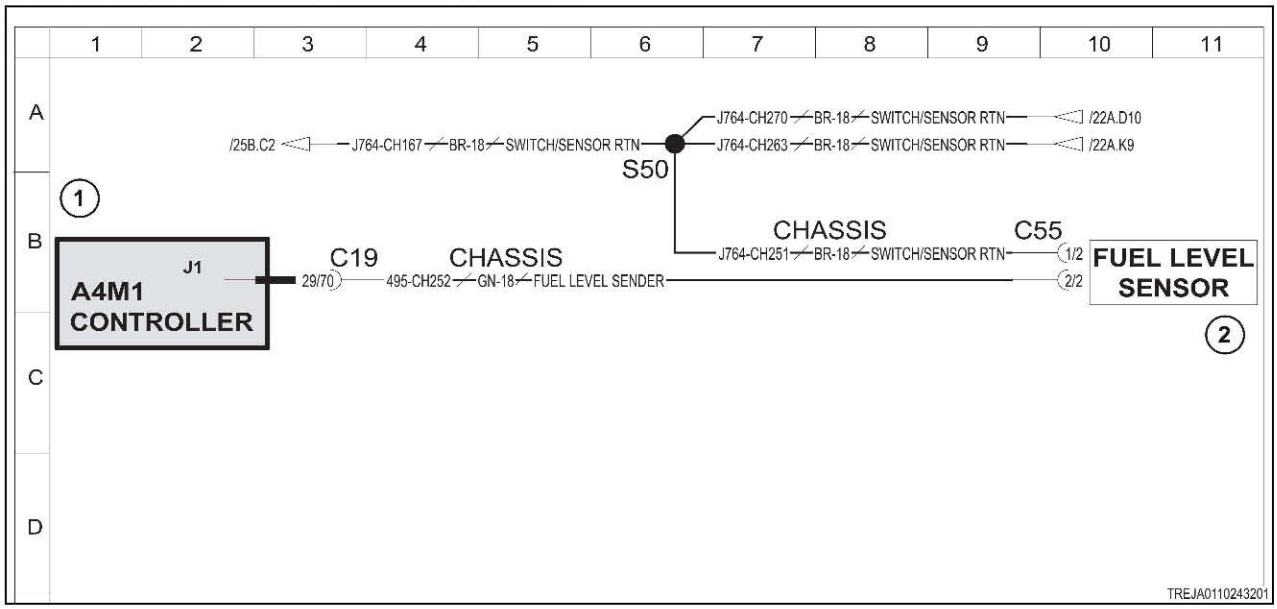

Fig. 125

Schematic legend		
Item	**Schematic term**	**Description**
1	FUEL LEVEL SENSOR	Fuel level sensor
2	A4M1 CONTROLLER	Transmission module
--	CHASSIS	Chassis
--	SWITCH/SENSOR RTN	Switch/sensor return

10.6.1.2 Transmission hydraulic oil charge pressure sensor electrical schematic

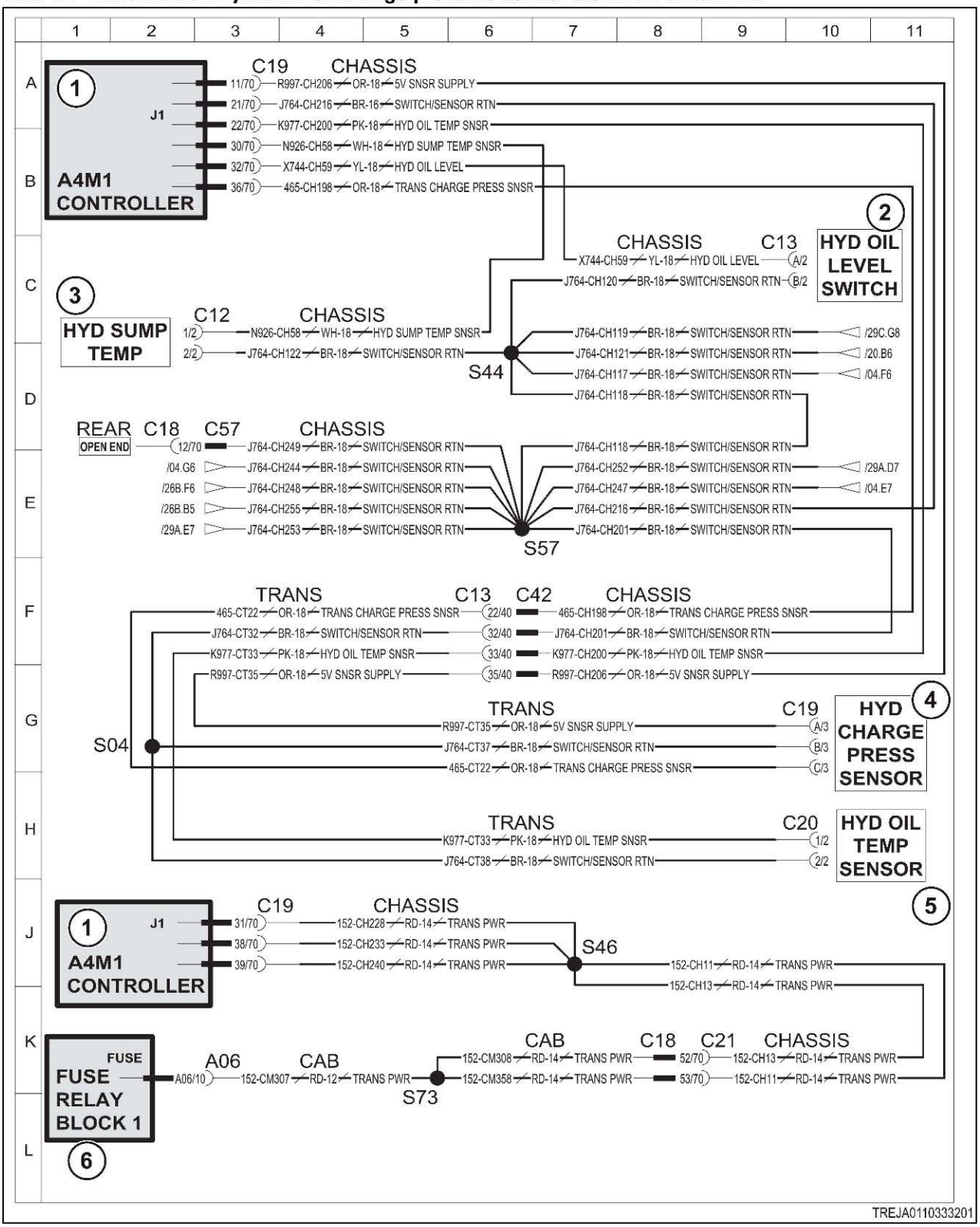

Fig. 126

Schematic legend		
Item	Schematic term	Description
1	A4M1 CONTROLLER	Transmission module
2	HYD OIL LEVEL SWITCH	Hydraulic oil level switch
3	HYD SUMP TEMP	Hydraulic sump temperature sensor
4	HYD CHARGE PRESS SENSOR	Hydraulic charge pressure sensor
5	HYD OIL TEMP SENSOR	Hydraulic oil temperature sensor
6	FUSE RELAY BLOCK 1	Fuse relay block 1
-	5V SNSR SUPPLY	5 volt sensor supply
-	SWITCH/SENSOR RTN	Switch/sensor return
-	TRANS CHARGE PRESS SNSR	Transmission charge pressure sensor
-	TRANS PWR	Transmission power

10.6.2 Code SA 03 SPN 96 FMI 04

The module detects that the signal voltage for the fuel level sensor is too low.

Diagnosis and solution

1. Check the fuel sensor.

a) Disconnect the harness from the fuel sensor.

Result

Expected results - the diagnostic code changed from SPN 96 FMI 04 to SPN 96 FMI 03.

Results:

- Yes - the diagnostic code changes from SPN 96 FMI 04 to SPN 96 FMI 03.

  The fuel sensor is bad.

  Repair: Replace the fuel sensor.
- No - the diagnostic code does not change from SPN 96 FMI 04 to SPN 96 FMI 03.

2. Check the harness.

a) Disconnect the harness from the fuel sensor.
b) Turn the key start switch to the off position.
c) Turn the battery disconnect switch to the off position.
d) Remove the key from the battery disconnect switch.
e) Disconnect the J1 and J2 connectors from the module.
f) Check the resistance between contact 2 of the module connector and frame ground.

Result

Expected results - the resistance is more than 5000 ohms.

Results:

- Yes - the resistance is more than 5000 ohms.
- No - the resistance is not more than 5000 ohms.

  The harness is bad.

  Repair: Repair or replace the harness.

3. Check if the diagnostic code remains.

a) Check the contacts of the connectors and clean the contacts.

b) Connect all the connectors.
c) Turn the battery disconnect switch to the on position.
d) Turn the key start switch to the on position.
e) Turn on the engine.
f) Operate the engine at high idle.
g) Check if the diagnostic code remains.

Result

Expected result - the diagnostic code is not active.

Results:

- Yes - SPN 96 FMI 04 is not active.

  Stop.
- No - SPN 96 FMI 04 is active.

  Failure of the transmission module is possible but not common. Exit the procedure and do the procedure again. If the diagnostic code remains active, replace the module.

  Stop.

10.6.2.1 Fuel level sender electrical schematic

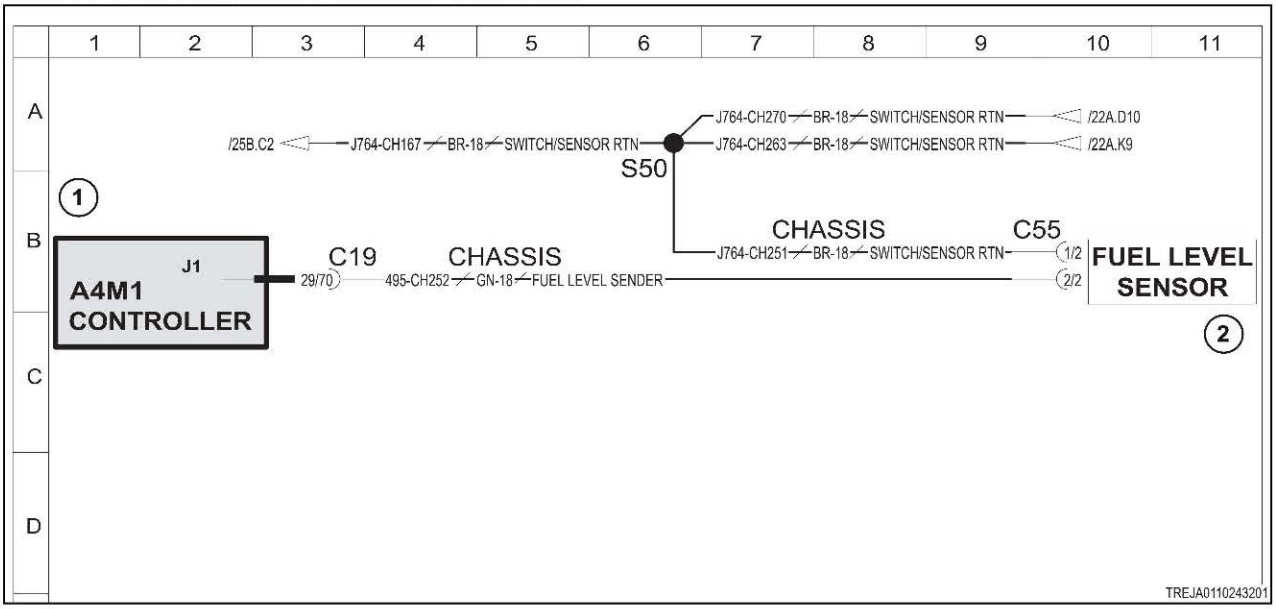

Fig. 127

Schematic legend		
Item	**Schematic term**	**Description**
1	FUEL LEVEL SENSOR	Fuel level sensor
2	A4M1 CONTROLLER	Transmission module
--	CHASSIS	Chassis
--	SWITCH/SENSOR RTN	Switch/sensor return

10.6.2.2 Transmission hydraulic oil charge pressure sensor electrical schematic

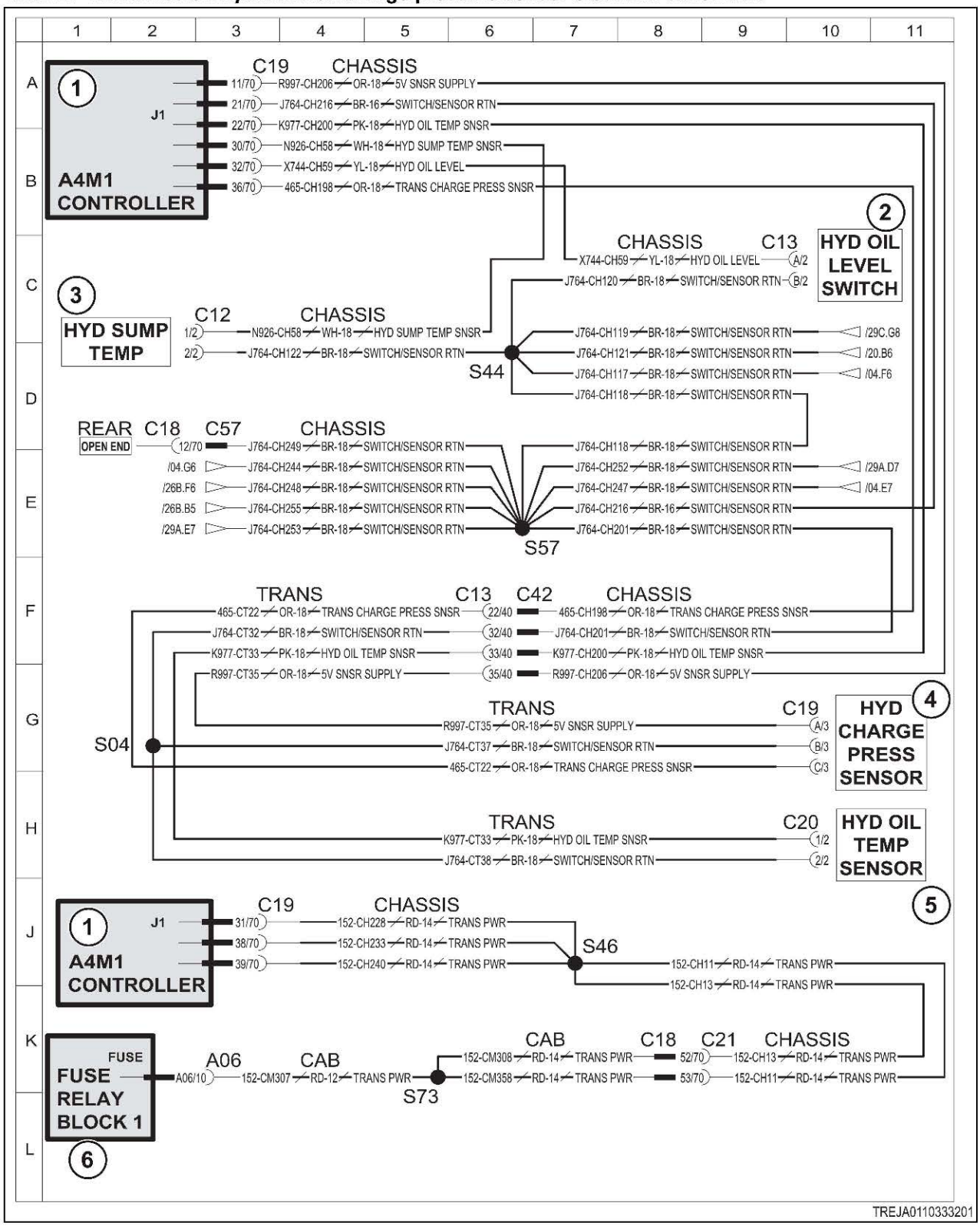

Fig. 128

Schematic legend		
Item	Schematic term	Description
1	A4M1 CONTROLLER	Transmission module
2	HYD OIL LEVEL SWITCH	Hydraulic oil level switch
3	HYD SUMP TEMP	Hydraulic sump temperature sensor
4	HYD CHARGE PRESS SENSOR	Hydraulic charge pressure sensor
5	HYD OIL TEMP SENSOR	Hydraulic oil temperature sensor
6	FUSE RELAY BLOCK 1	Fuse relay block 1
-	5V SNSR SUPPLY	5 volt sensor supply
-	SWITCH/SENSOR RTN	Switch/sensor return
-	TRANS CHARGE PRESS SNSR	Transmission charge pressure sensor
-	TRANS PWR	Transmission power

10.6.3 Code SA 03 SPN 117 FMI 01

The module detects that the signal voltage for the service brake accumulator pressure switch is too low.

Diagnosis and solution

1. Check the battery voltage.

a) Check the voltage at the battery posts.

Result

Expected results - the voltage is more than 12 volts.

Results:

- Yes - the voltage is more than 12 volts.
- No - the voltage is not more than 12 volts.

  The charging system is bad. Troubleshoot the charging system.

2. Check the harness for 12 volt power from battery.

a) Turn the key start switch to the off position.
b) Turn the battery disconnect switch to the off position.
c) Remove the key from the battery disconnect switch.
d) Disconnect the J1 and J2 connectors from the transmission module.
e) Turn the battery disconnect switch to the on position.
f) Turn the key start switch to the on position.
g) Check the voltage at contacts 31, 38, and 39 of the J1 connector.

Result

Expected results - the voltage is 12 volts.

Results:

- Yes - the voltage is 12 volts.
- No - the voltage is not 12 volts.

3. Check the connector contacts.

a) Make sure connectors in the harness are connected and the contacts are clean.

Result

Expected results - SPN 117 FMI 01 is no longer active.

Results:

- Yes - SPN 117 FMI 01 is no longer active.

  Stop.
- No - SPN 117 FMI 01 is active.

4. Check the harness for short-circuit.

a) Turn the key start switch to the off position.
b) Turn the battery disconnect switch to the off position.
c) Remove the key from the battery disconnect switch.
d) Disconnect the harness from the brake accumulator pressure switch.
e) Check the resistance between contact A and contact B of the brake accumulator pressure switch connector.
f) Check the resistance between contact A of the brake accumulator pressure switch connector and frame ground.
g) Check the resistance between contact B of the brake accumulator pressure switch connector and frame ground.

Result

Expected results - the resistance is more than 5000 ohms.

Results:

- Yes - the resistance is more than 5000 ohms.
- No - the resistance is not more than 5000 ohms.

  The harness is bad.

  Repair: Repair or replace the harness.

5. Check the harness for open circuit.

a) Turn the key start switch to the off position.
b) Turn the battery disconnect switch to the off position.
c) Remove the key from the battery disconnect switch.
d) Disconnect the harness from the brake accumulator pressure switch.
e) Put a jumper between contact A and contact B of the brake accumulator pressure switch harness connector.
f) Disconnect the harness from the transmission module.
g) Check the resistance between contact 42 and contact 21 of the J1 connector.

Result

Expected results - the resistance is less than 5 ohms.

Results:

- Yes - the resistance is less than 5 ohms.
- No - the resistance is not less than 5 ohms.

  The harness is bad.

  Repair: Repair or replace the harness.

6. Check the brake accumulator pressure switch operation.

a) Turn the key start switch to the off position.
b) Turn the battery disconnect switch to the off position.
c) Remove the key from the battery disconnect switch.
d) At the back of the brake accumulator pressure switch harness connector, put the probes into contact A and contact B.
e) Turn the battery disconnect switch to the on position.
f) Turn the key start switch to the on position.

g) Record the voltage value.
h) Press and release the brake pedal several times.
i) Record the voltage value.

Result

Expected results - the voltage value changes after operating the brake pedal.

Results:

- Yes - the voltage value changes after operating the brake pedal.
- No - the voltage value does not change after operating the brake pedal.

  The brake accumulator pressure switch is bad.

  Repair: Replace the brake accumulator pressure switch.

7. Check the fuse.
a) Turn the key start switch to the off position.
b) Turn the battery disconnect switch to the off position.
c) Remove the key from the battery disconnect switch.
d) Check the fuse for transmission power.

Result

Expected results - the fuse is good.

Results:

- Yes - the fuse is good.
- No - the fuse is not good.

  Repair: Replace the fuse.

8. Check if the diagnostic code remains.
a) Check the contacts of the connectors and clean the contacts.
b) Connect all the connectors.
c) Turn the battery disconnect switch to the on position.
d) Turn the key start switch to the on position.
e) Turn on the engine.
f) Operate the engine at high idle.
g) Check if the diagnostic code remains.

Result

Expected result - the diagnostic code is not active.

Results:

- Yes - SPN 117 FMI 01 is not active.

  Stop.
- No - SPN 117 FMI 01 is active.

  Failure of the transmission module is possible but not common. Exit the procedure and do the procedure again. If the diagnostic code remains active, replace the module.

  Stop.

10.6.3.1 Brake accumulator electrical schematic

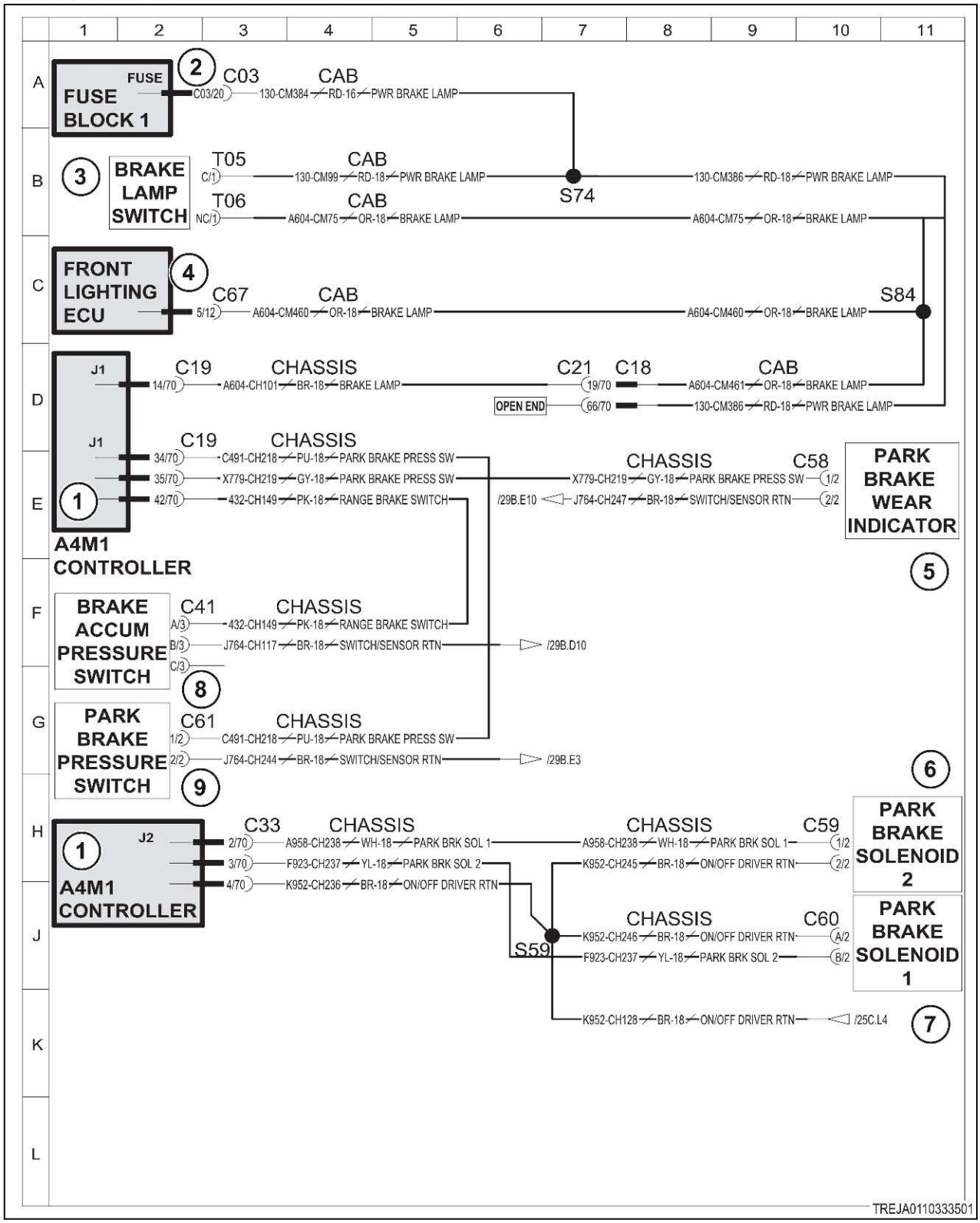

Fig. 129

Schematic legend		
Item	**Schematic term**	**Description**
1	A4M1 CONT	Transmission module
2	FUSE BLOCK 1	Fuse block 1
3	BRAKE LAMP SWITCH	Brake lamp switch
4	FRONT LIGHTING ECU	Front lighting module
5	PARK BRAKE WEAR INDICATOR	Park brake wear indicator
6	PARK BRK SOL 2	Park brake solenoid 2
7	PARK BRK SOL 1	Park brake solenoid 1
8	BRAKE ACCUM PRESSURE SWITCH	Brake accumulator pressure switch
9	PARK BRAKE PRESSURE SWITCH	Park brake pressure switch
--	SWITCH/SENSOR RTN	Switch/sensor return
--	PARK BRAKE PRESS SW	Park brake pressure switch
--	PWR BRAKE LAMP	Power brake lamp
--	ON/OFF DRIVER RTN	On/off driver return
--	PWR BRAKE LAMP	Power brake lamp

10.6.4 Code SA 03 SPN 126 FMI 31

The module has detected that the transmission oil filter bypass signal is not within normal range.

Diagnosis and solution

1. Check for power at the sensor.

a) At the back of the harness connector for the transmission charge filter bypass switch, put a multimeter probe along the supply wire to contact 1.

b) Turn the battery disconnect switch to the on position.

c) Turn the key start switch to the on position.

d) Check the voltage at the back of the harness connector for the transmission charge filter bypass switch contact 1 to frame ground.

Result

Expected results - the voltage is 12 volts.

Results:

- Yes - the voltage is 12 volts.

  go to step 2
- No - the voltage is not 12 volts.

  The harness is bad.

  Repair: Repair or replace the harness.

2. Check the harness for open circuit.

a) Turn the key start switch to the off position.

b) Turn the battery disconnect switch to the off position.

c) Remove the key from the battery disconnect switch.

d) Disconnect the harness connector from the transmission charge filter bypass switch.

e) Put a jumper wire between contact 1 and contact 2 of the transmission charge filter bypass switch harness connector.

f) Disconnect the J1 harness connector from the transmission module.

g) Check the resistance between contact 26 and contact 21 of the J1 harness connector.

Result

Expected results - the resistance is less than 5 ohms.

Results:

- Yes - the resistance is less than 5 ohms.

  go to step 3.
- No - the resistance is not less than 5 ohms.

  The harness is bad.

  Repair: Repair or replace the harness.

3. Check the harness for short-circuit.

a) Turn the key start switch to the off position.
b) Turn the battery disconnect switch to the off position.
c) Remove the key from the battery disconnect switch.
d) Disconnect the harness connector from the transmission charge filter bypass switch.
e) Check the resistance between contact 1 and contact 2 of the transmission charge filter bypass switch harness connector.

Result

Expected results - the resistance is more than 5000 ohms.

Results:

- Yes - the resistance is more than 5000 ohms.

  go to step 4.
- No - the resistance is not more than 5000 ohms.

  The harness is bad.

  Repair: Repair or replace the harness.

4. Check if the diagnostic code remains.

a) Check the contacts of the connectors and clean the contacts.
b) Connect all the connectors.
c) Turn the battery disconnect switch to the on position.
d) Turn the key start switch to the on position.
e) Turn on the engine.
f) Operate the engine at high idle.
g) Check if the diagnostic code remains.

Result

Expected result - the diagnostic code is not active.

Results:

- Yes - SPN 126 FMI 31 is not active.

  Stop.
- No - SPN 126 FMI 31 is active.

  Failure of the transmission module is possible but not common. Exit the procedure and do the procedure again. If the diagnostic code remains active, replace the module.

  Stop.

10.6.4.1 Transmission hydraulic oil charge pressure sensor electrical schematic

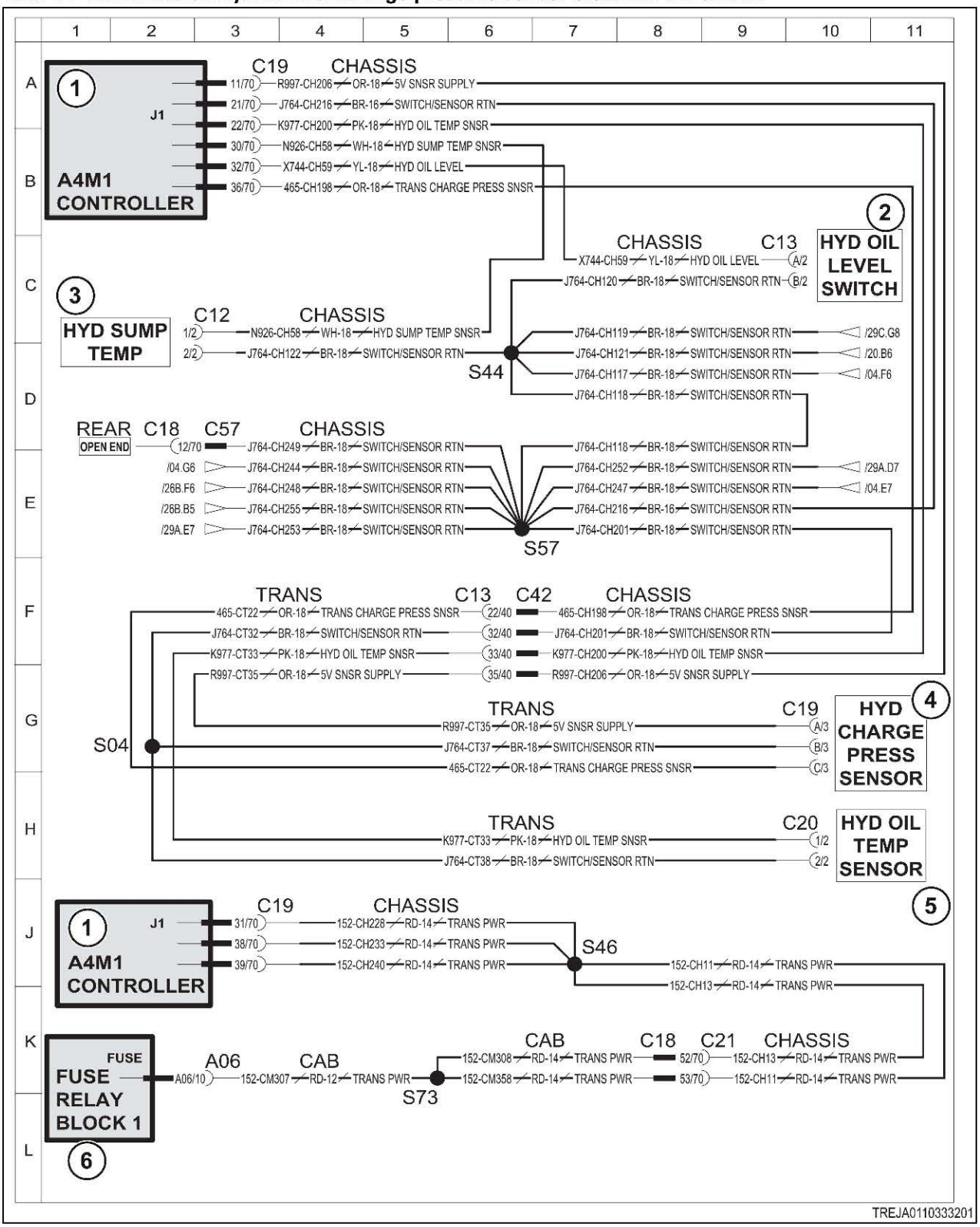

Fig. 130

Schematic legend		
Item	Schematic term	Description
1	A4M1 CONTROLLER	Transmission module
2	HYD OIL LEVEL SWITCH	Hydraulic oil level switch
3	HYD SUMP TEMP	Hydraulic sump temperature sensor
4	HYD CHARGE PRESS SENSOR	Hydraulic charge pressure sensor
5	HYD OIL TEMP SENSOR	Hydraulic oil temperature sensor
6	FUSE RELAY BLOCK 1	Fuse relay block 1
-	5V SNSR SUPPLY	5 volt sensor supply
-	SWITCH/SENSOR RTN	Switch/sensor return
-	TRANS CHARGE PRESS SNSR	Transmission charge pressure sensor
-	TRANS PWR	Transmission power

10.6.5 Code SA 03 SPN 127 FMI 01

The module detects that the signal voltage for the transmission hydraulic charge pressure sensor is too low.

Diagnosis and solution

1. Check the battery voltage.

a) Check the voltage at the battery posts.

Result

Expected results - the voltage is more than 12 volts.

Results:

- Yes - the voltage is more than 12 volts.
- No - the voltage is not more than 12 volts.

The charging system is bad. Troubleshoot the charging system.

2. Check the harness for 12 volt power from battery.

a) Turn the key start switch to the off position.
b) Turn the battery disconnect switch to the off position.
c) Remove the key from the battery disconnect switch.
d) Disconnect the J1 and J2 connectors from the transmission module.
e) Turn the battery disconnect switch to the on position.
f) Turn the key start switch to the on position.
g) Check the voltage at contacts 31, 38, and 39 of the J1 connector.

Result

Expected results - the voltage is 12 volts.

Results:

- Yes - the voltage is 12 volts.
- No - the voltage is not 12 volts.

3. Check the connector contacts.

a) Make sure connectors in the harness are connected and the contacts are clean.

Result

Expected results - SPN 127 FMI 01 is no longer active.

Results:

- Yes - SPN 127 FMI 01 is no longer active.

  Stop.
- No - SPN 127 FMI 01 is active.

4. Check the harness for short-circuit.

a) Turn the key start switch to the off position.
b) Turn the battery disconnect switch to the off position.
c) Remove the key from the battery disconnect switch.
d) Disconnect the hydraulic charge pressure sensor harness connector.
e) Check the resistance between contact A and contact B of the hydraulic charge pressure sensor harness connector.
f) Check the resistance between contact A and contact C of the hydraulic charge pressure sensor harness connector.
g) Check the resistance between contact B and contact C of the hydraulic charge pressure sensor harness connector.
h) Check the resistance between contact A of the hydraulic charge pressure sensor harness connector and frame ground.
i) Check the resistance between contact B of the hydraulic charge pressure sensor harness connector and frame ground.
j) Check the resistance between contact C of the hydraulic charge pressure sensor harness connector and frame ground.

Result

Expected results - the resistance is more than 5000 ohms.

Results:

- Yes - the resistance is more than 5000 ohms.
- No - the resistance is not more than 5000 ohms.

  The harness is bad.

  Repair: Repair or replace the harness.

5. Check the harness for open circuit.

a) Turn the key start switch to the off position.
b) Turn the battery disconnect switch to the off position.
c) Remove the key from the battery disconnect switch.
d) Disconnect the hydraulic charge pressure sensor harness connector.
e) Put a jumper wire between contact A and contact B of the hydraulic charge pressure sensor harness connector.
f) Check the resistance between contact 11 and contact 21 of the J1 connector for the transmission module.

Result

Expected results - the resistance is less than 5 ohms.

Results:

- Yes - the resistance is less than 5 ohms.
- No - the resistance is not less than 5 ohms.

  The harness is bad.

  Repair: Repair or replace the harness.

6. Check the harness for open circuit.

a) Turn the key start switch to the off position.
b) Turn the battery disconnect switch to the off position.

c) Remove the key from the battery disconnect switch.
d) Disconnect the hydraulic charge pressure sensor harness connector.
e) Put a jumper wire between contact B and contact C of the hydraulic charge pressure sensor harness connector.
f) Check the resistance between contact 21 and contact 36 of the J1 connector for the transmission module.

Result

Expected results -

Results:

- Yes - the resistance is less than 5 ohms.
- No - the resistance is not less than 5 ohms.

  The harness is bad.

  Repair: Repair or replace the harness.

7. Check the fuse.
a) Turn the key start switch to the off position.
b) Turn the battery disconnect switch to the off position.
c) Remove the key from the battery disconnect switch.
d) Check the fuse for transmission power.

Result

Expected results - the fuse is good.

Results:

- Yes - the fuse is good.
- No - the fuse is not good.

  Repair: Replace the fuse.

8. Check if the diagnostic code remains.
a) Check the contacts of the connectors and clean the contacts.
b) Connect all the connectors.
c) Turn the battery disconnect switch to the on position.
d) Turn the key start switch to the on position.
e) Turn on the engine.
f) Operate the engine at high idle.
g) Check if the diagnostic code remains.

Result

Expected result - the diagnostic code is not active.

Results:

- Yes - SPN 127 FMI 01 is not active.

  Stop.
- No - SPN 127 FMI 01 is active.

  Failure of the transmission module is possible but not common. Exit the procedure and do the procedure again. If the diagnostic code remains active, replace the module.

  Stop.

10.6.5.1 Transmission hydraulic oil charge pressure sensor electrical schematic

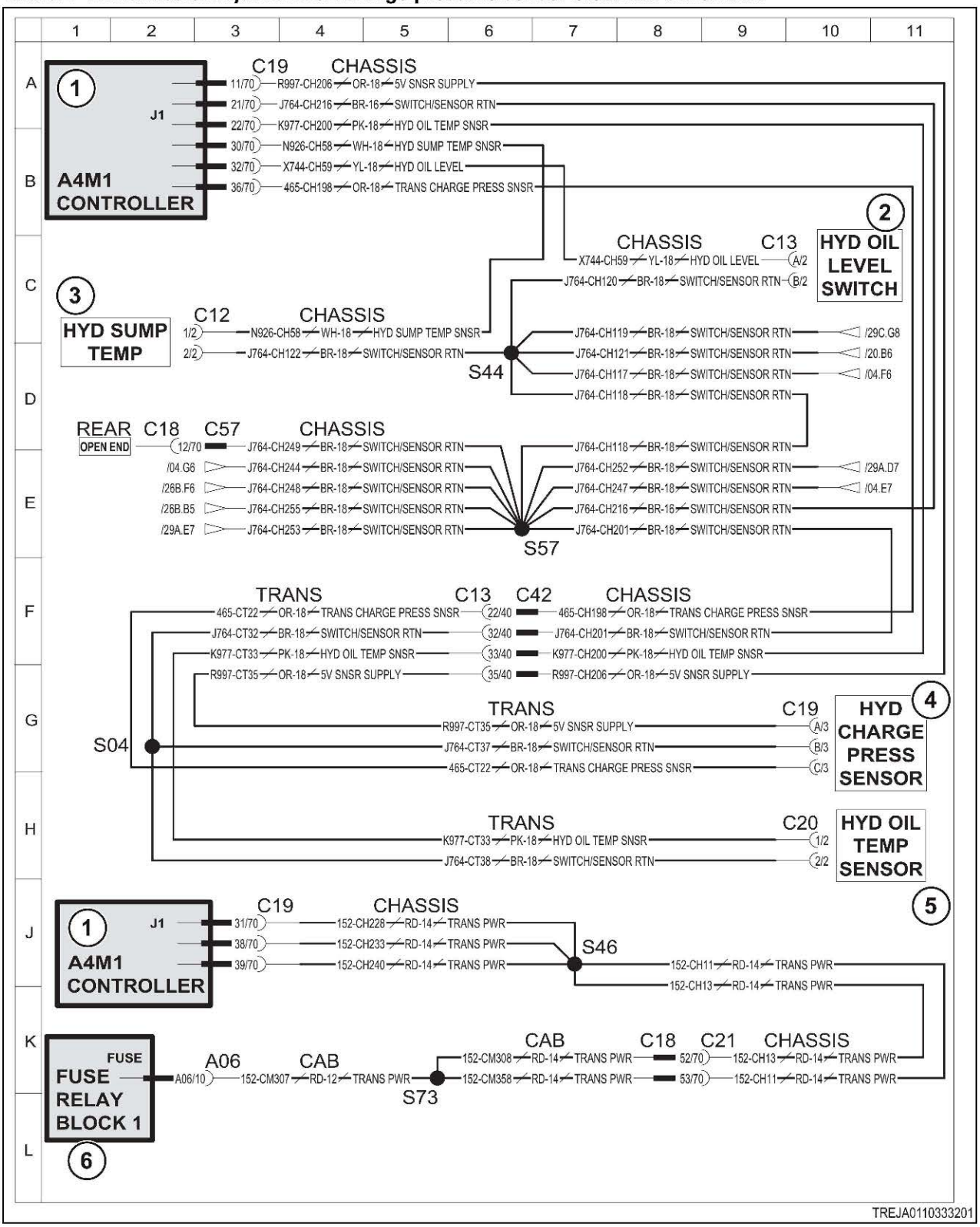

Fig. 131

Schematic legend		
Item	Schematic term	Description
1	A4M1 CONTROLLER	Transmission module
2	HYD OIL LEVEL SWITCH	Hydraulic oil level switch
3	HYD SUMP TEMP	Hydraulic sump temperature sensor
4	HYD CHARGE PRESS SENSOR	Hydraulic charge pressure sensor
5	HYD OIL TEMP SENSOR	Hydraulic oil temperature sensor
6	FUSE RELAY BLOCK 1	Fuse relay block 1
-	5V SNSR SUPPLY	5 volt sensor supply
-	SWITCH/SENSOR RTN	Switch/sensor return
-	TRANS CHARGE PRESS SNSR	Transmission charge pressure sensor
-	TRANS PWR	Transmission power

10.6.6 Code SA 03 SPN 161 FMI 02

The module detects that the signal voltage for the transmission input shaft speed sensor is not correct.

Diagnosis and solution

1. Check the resistance of the sensor.

a) Turn the key start switch to the off position.
b) Turn the battery disconnect switch to the off position.
c) Remove the key from the battery disconnect switch.
d) Disconnect the input shaft speed sensor harness connector.
e) Check the resistance between contact 1 and contact 2 of the input shaft speed sensor harness connector.

Result

Expected results - the resistance is between 75 and 230 ohms.

Results:

- Yes - the resistance is between 75 and 230 ohms.
- No - the resistance is not between 75 and 230 ohms.

  The sensor is bad.

  Repair: Replace the sensor.

2. Check the harness for short-circuit.

a) Turn the key start switch to the off position.
b) Turn the battery disconnect switch to the off position.
c) Remove the key from the battery disconnect switch.
d) Disconnect the input shaft speed sensor harness connector.
e) Check the resistance between contact 1 and contact 2 of the input shaft speed sensor harness connector.

Result

Expected results - the resistance is more than 5000 ohms.

Results:

- Yes - the resistance is more than 5000 ohms.

- No - the resistance is not more than 5000 ohms.

  The harness is bad.

  Repair: Repair or replace the harness.

3. Check the harness for open circuit.

a) Turn the key start switch to the off position.
b) Turn the battery disconnect switch to the off position.
c) Remove the key from the battery disconnect switch.
d) Disconnect the input shaft speed sensor harness connector.
e) Put a jumper wire between contact 1 and contact 2 of the input shaft speed sensor harness connector.
f) Disconnect the harness connectors from the transmission module.
g) Check the resistance between contact 8 and contact 9 of the J1 connector.

Result

Expected results - the resistance is less than 5 ohms.

Results:

- Yes - the resistance is less than 5 ohms.
- No - the resistance is not less than 5 ohms.

  The harness is bad.

  Repair: Repair or replace the harness.

4. Check if the diagnostic code remains.

a) Check the contacts of the connectors and clean the contacts.
b) Connect all the connectors.
c) Turn the battery disconnect switch to the on position.
d) Turn the key start switch to the on position.
e) Turn on the engine.
f) Operate the engine at high idle.
g) Check if the diagnostic code remains.

Result

Expected result - the diagnostic code is not active.

Results:

- Yes - SPN 161 FMI 02 is not active.

  Stop.
- No - SPN 161 FMI 02 is active.

  Failure of the transmission module is possible but not common. Exit the procedure and do the procedure again. If the diagnostic code remains active, replace the module.

  Stop.

10.6.6.1 Transmission input shaft speed sensor electrical schematic

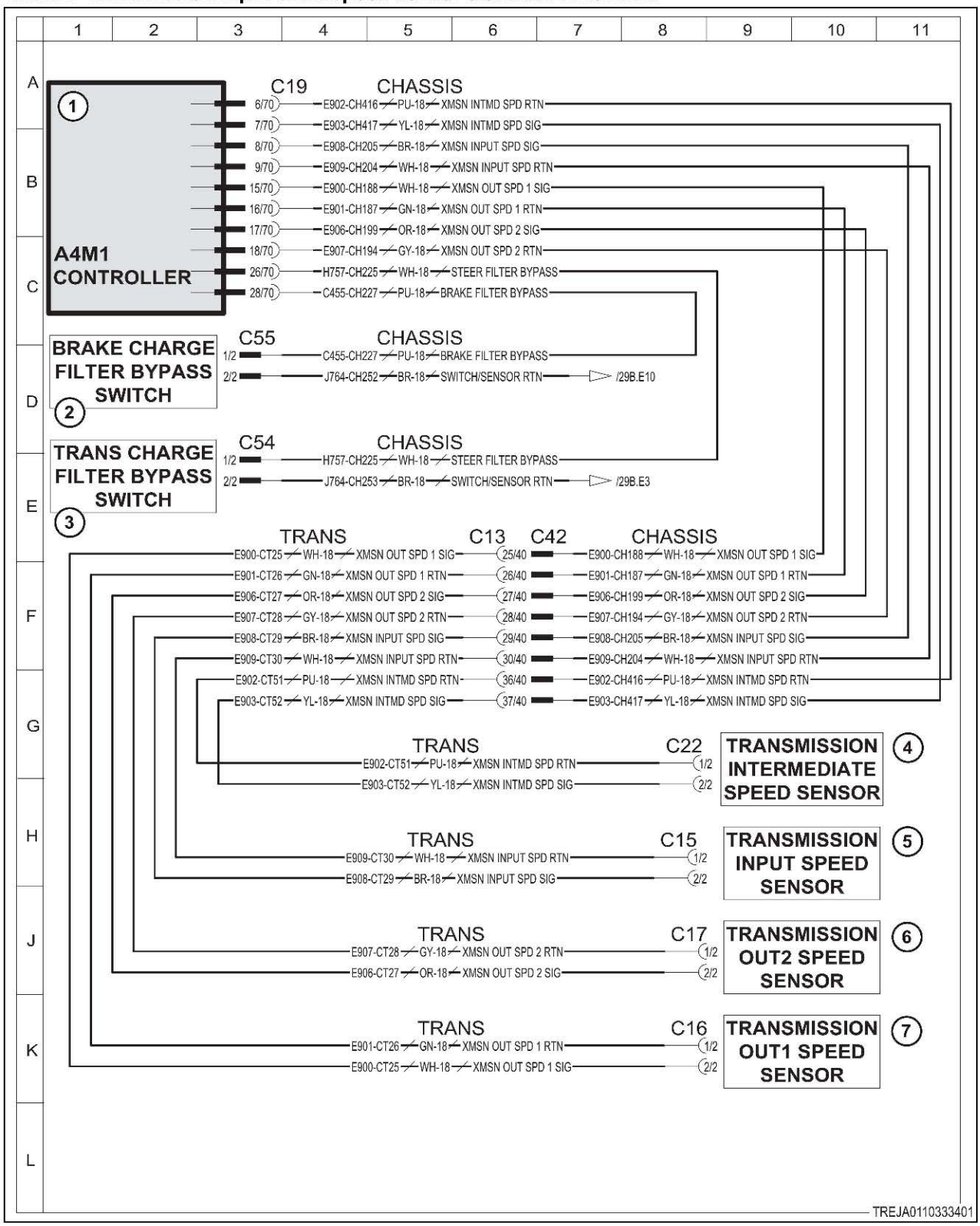

Fig. 132

Schematic legend		
Item	Schematic term	Description
1	A4M1 CONT	Transmission module
2	BRAKE CHARGE FILTER BYPASS SWITCH	Brake charge filter bypass switch
3	TRANS CHARGE FILTER BYPASS SWITCH	Transmission charge filter bypass switch
4	TRANSMISSION INTERMEDIATE SPEED SENSOR	Transmission intermediate speed sensor
5	TRANSMISSION INPUT SPEED SENSOR	Transmission input speed sensor
6	TRANSMISSION OUT 2 SPEED SENSOR	Transmission output speed sensor 2
7	TRANSMISSION OUT 1 SPEED SENSOR	Transmission output speed sensor 1
--	STEERING FILTER BYPASS	Steering filter bypass
--	BRAKE FILTER BYPASS	Brake filter bypass
--	SWITCH/SENSOR RTN	Switch/sensor return
--	XMSN OUT SPD SIG	Transmission output speed signal
--	XMSN OUT SPD RTN	Transmission output speed return
--	XMSN INPUT SPD RTN	Transmission input speed return
--	XMSN INPUT SPD SIG	Transmission input speed signal

10.6.7 Code SA 03 SPN 168 FMI 01

The electrical system voltage is below normal range.

Diagnosis and solution

1. Check the battery voltage.

a) Check the voltage at the battery posts.

Result

Expected results - the voltage is more than 12 volts.

Results:

- Yes - the voltage is more than 12 volts.
- No - the voltage is not more than 12 volts.

  The charging system is bad. Troubleshoot the charging system.

2. Check if the diagnostic code remains.

a) Check the contacts of the connectors and clean the contacts.
b) Connect all the connectors.
c) Turn the battery disconnect switch to the on position.
d) Turn the key start switch to the on position.
e) Turn on the engine.
f) Operate the engine at high idle.
g) Check if the diagnostic code remains.

Result

Expected result - the diagnostic code is not active.

Results:

- Yes - SPN 168 FMI 01 is not active.

  Stop.
- No - SPN 168 FMI 01 is active.

  Failure of the transmission module is possible but not common. Exit the procedure and do the procedure again. If the diagnostic code remains active, replace the module.

  Stop.

10.6.7.1 Transmission input shaft speed sensor electrical schematic

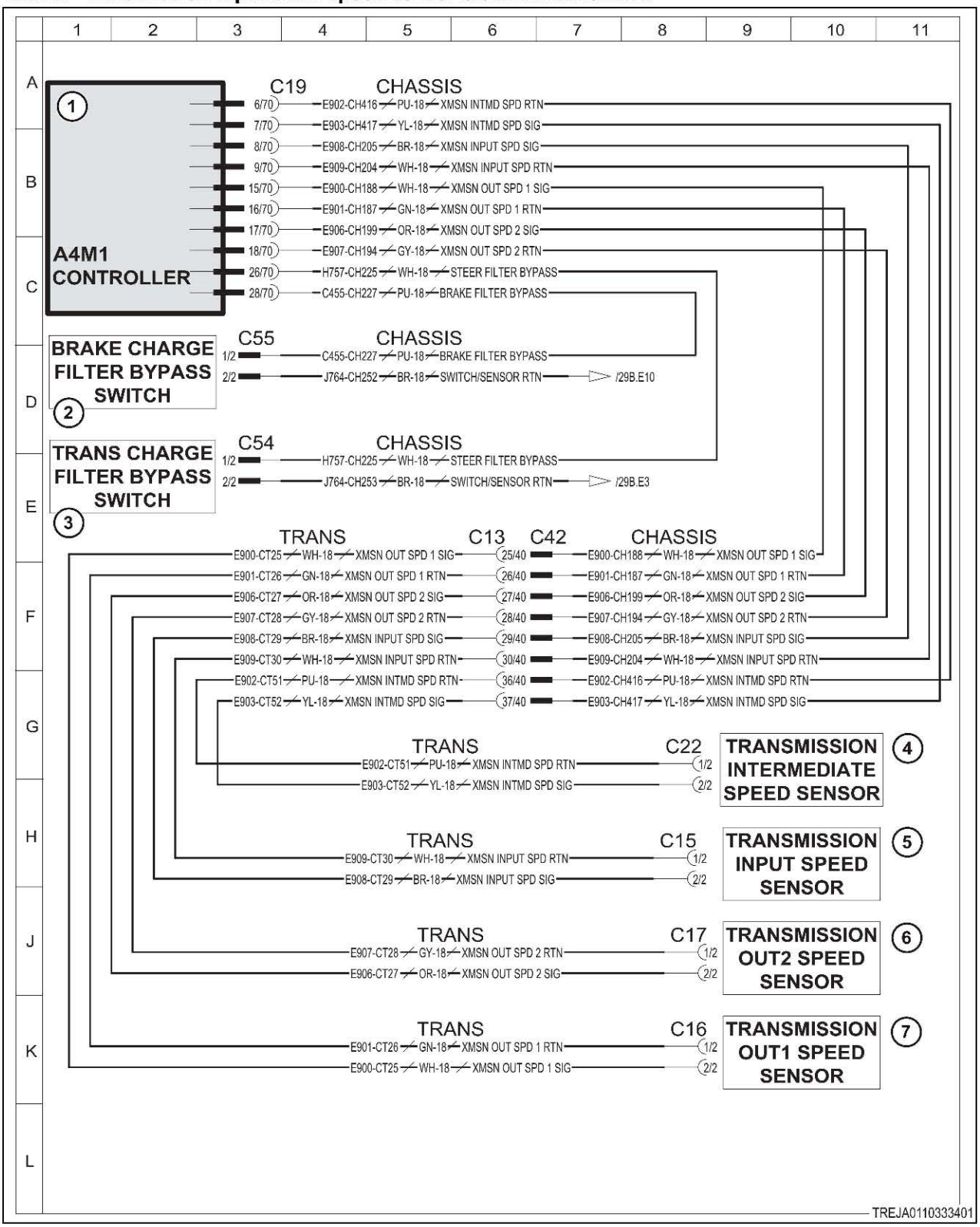

Fig. 133

Schematic legend		
Item	Schematic term	Description
1	A4M1 CONT	Transmission module
2	BRAKE CHARGE FILTER BYPASS SWITCH	Brake charge filter bypass switch
3	TRANS CHARGE FILTER BYPASS SWITCH	Transmission charge filter bypass switch
4	TRANSMISSION INTERMEDIATE SPEED SENSOR	Transmission intermediate speed sensor
5	TRANSMISSION INPUT SPEED SENSOR	Transmission input speed sensor
6	TRANSMISSION OUT 2 SPEED SENSOR	Transmission output speed sensor 2
7	TRANSMISSION OUT 1 SPEED SENSOR	Transmission output speed sensor 1
–	STEERING FILTER BYPASS	Steering filter bypass
–	BRAKE FILTER BYPASS	Brake filter bypass
–	SWITCH/SENSOR RTN	Switch/sensor return
–	XMSN OUT SPD SIG	Transmission output speed signal
–	XMSN OUT SPD RTN	Transmission output speed return
–	XMSN INPUT SPD RTN	Transmission input speed return
–	XMSN INPUT SPD SIG	Transmission input speed signal

10.6.8 Code SA 03 SPN 177 FMI 00

The module detects that the signal voltage for the transmission hydraulic oil temperature sensor is too high.

Note that SA 03 SPN 177 FMI 00 and SA 03 SPN 1638 FMI 00 represent the same fault conditions for this machine, and either/both codes may be reported when those conditions exist.

Diagnosis and solution

1. Check the transmission for overheating.
   a) Check the hydraulic oil cooler and the cooling package for any external airflow restriction.
   b) Check the transmission oil level. See the information for checking the transmission oil level in the service manual.
   c) Turn the key start switch to the on position.
   d) Let the transmission hydraulic system warm to normal range.
   e) Check the actual transmission temperature.

   Result

   - The transmission is operating above normal temperature.

     Continue troubleshooting the transmission temperature. See the service manual for instruction on testing the transmission hydraulic systems.
   - The transmission is operating at normal temperature.

     The sensor may be faulty.

     See step 2 to check the sensor.

2. Check the hydraulic oil temperature sensor.
   a) Turn the key start switch to the off position.
   b) Turn the battery disconnect switch to the off position.
   c) Check the resistance from hydraulic oil temperature sensor contact 1 to contact 2.
   d) Compare the actual oil temperature with the resistance using the table below.

Temperature C (F)	Resistance (ohms)
0 C	3440
20 C	1249
60 C	248
99 C	70

Result

- The resistance is correct.

  See step 3 to validate the repair.
- The resistance is not correct.

  Replace the hydraulic oil temperature sensor.

  See step 3 to validate the repair.

3. Check if the diagnostic code remains.

a) Connect all the connectors.
b) Turn the battery disconnect switch to the on position.
c) Turn the key start switch to the on position.
d) Operate the machine at low idle.
e) Check if the diagnostic code remains.

Result

- SPN 177 FMI 00 is not active.

  Stop.
- SPN 177 FMI 00 is active.

  Failure of the transmission module is possible but not common. Exit the procedure and do the procedure again. If the diagnostic code remains active, replace the module.

  Stop.

10.6.8.1 Transmission hydraulic oil charge pressure sensor electrical schematic

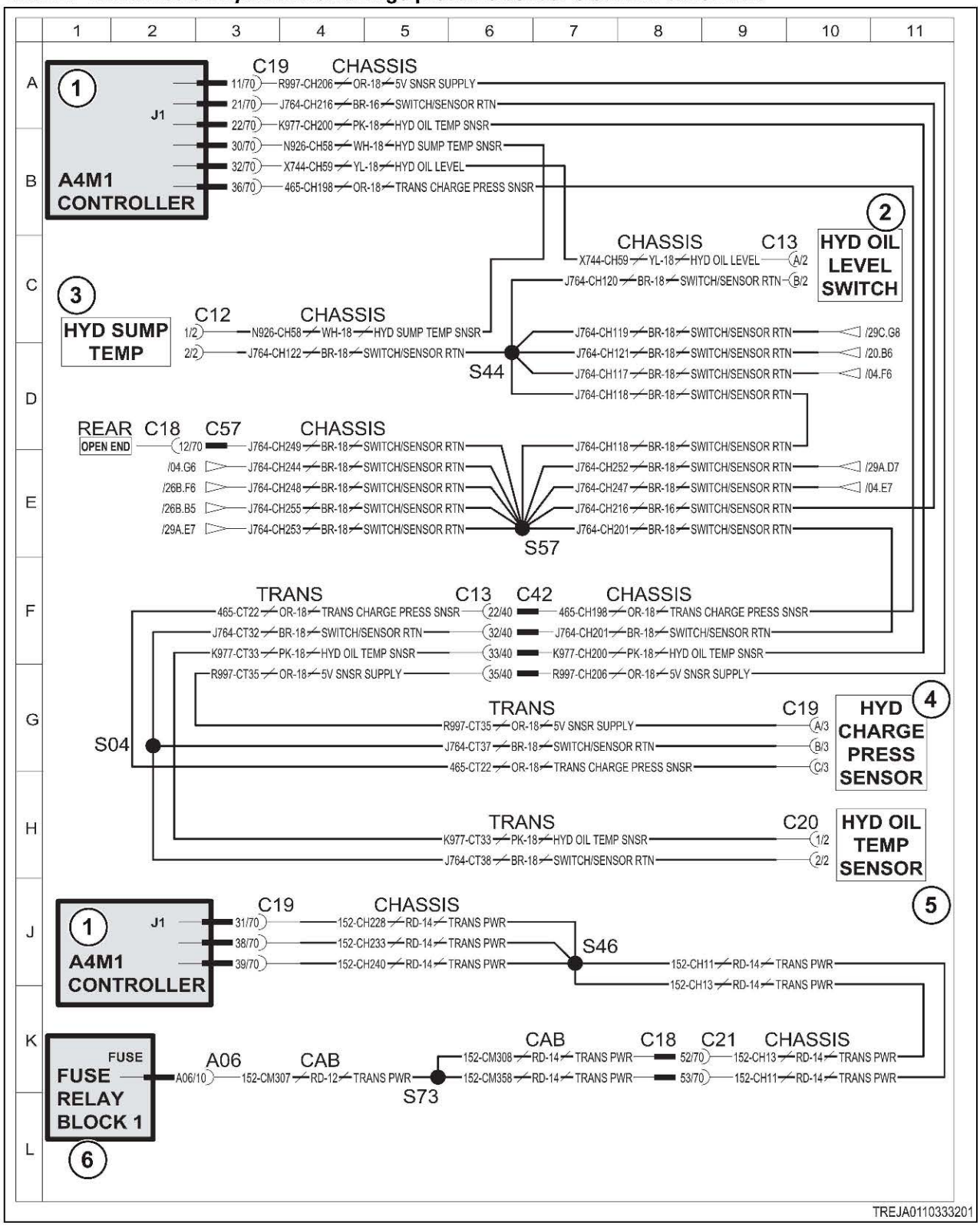

Fig. 134

Schematic legend		
Item	Schematic term	Description
1	A4M1 CONTROLLER	Transmission module
2	HYD OIL LEVEL SWITCH	Hydraulic oil level switch
3	HYD SUMP TEMP	Hydraulic sump temperature sensor
4	HYD CHARGE PRESS SENSOR	Hydraulic charge pressure sensor
5	HYD OIL TEMP SENSOR	Hydraulic oil temperature sensor
6	FUSE RELAY BLOCK 1	Fuse relay block 1
-	5V SNSR SUPPLY	5 volt sensor supply
-	SWITCH/SENSOR RTN	Switch/sensor return
-	TRANS CHARGE PRESS SNSR	Transmission charge pressure sensor
-	TRANS PWR	Transmission power

10.6.9 Code SA 03 SPN 177 FMI 03

The module detects that the signal voltage for the transmission hydraulic oil temperature sensor is too high.

The transmission oil temperature sensor is a temperature-controlled resistive element. The higher the temperature, the lower the resistance. The voltage is reported by the transmission module as too high, indicating an open circuit. The most likely cause is a disconnected sensor or the sensor itself.

SA 03 SPN 177 FMI 03 and SA 03 SPN 1638 FMI 03 represent the same fault conditions for this machine, and either/both codes may be reported when those conditions exist.

Diagnosis and solution

1. Check the hydraulic oil temperature sensor resistance, at the sensor.

a) Turn the key start switch to the off position.
b) Disconnect the sensor from the harness.
c) Check the resistance from the sensor contact 1 to contact 2.
d) Compare the actual oil temperature with the resistance using the table below.

Temperature C (F)	Resistance (ohms)
0 C	3440
20 C	1249
60 C	248
99 C	70

Result

- The resistance is correct.

  See step 2 to check the harness
- The resistance is not correct (too high).

  Replace the hydraulic oil temperature sensor.

  See step 4 to validate the repair.

2. Check the hydraulic oil temperature sensor resistance, at the transmission module.

a) Inspect and clean the temperature sensor connector contacts.
b) Reconnect the temperature sensor.
c) Disconnect the J1 harness connector from the transmission module.

d) Check the resistance from contacts 21 to 22 of the J1 harness connector at the transmission module .

Result

- The resistance at the module is the same or similar to the resistance at the sensor (from previous step).

  The harness may be shorted to battery.

  See step 3 to check the voltage.
- The resistance is more than 5000 ohms.

  The harness is open circuit.

  Repair or replace the harness.

  See step 4 to validate the repair.

3. Check the sensor voltage at the transmission module.

a) Inspect and clean the J1 harness connector.
b) Reconnect the J1 connector to the transmission module.
c) Turn the key start switch to the on position.
d) Let the transmission hydraulic system warm to normal range.
e) Check voltage between contacts 21 and 22 of the J1 harness connector at the transmission module.

Result

Because the harness and sensor resistance was previously confirmed, a high voltage at this step indicates a short circuit to positive power.

- The transmission is at operating temperature, and the voltage is at or below 5 volts.

  The sensor and circuit are good.

  If the error code persists, the transmission module is faulty.

  Replace the transmission module.

  See step 4 to validate the repair.
- The transmission is at operating temperature, and the voltage is at or near 12 volts.

  The harness is shorted to battery positive.

  Repair or replace the harness.

  See step 4 to validate the repair.

4. Check if the diagnostic code remains.

a) Make sure all connectors are cleaned and replaced.
b) Turn the battery disconnect switch to the on position.
c) Turn the key start switch to the on position.
d) Let the transmission hydraulic system warm to normal range.
e) Check if the diagnostic code remains.

Result

- SPN 177 FMI 03 is not active.

  Stop.
- SPN 177 FMI 03 is active.

  Failure of the transmission module is possible but not common. Exit the procedure and do the procedure again. If the diagnostic code remains active, replace the module.

  Stop.

10.6.9.1 Transmission hydraulic oil charge pressure sensor electrical schematic

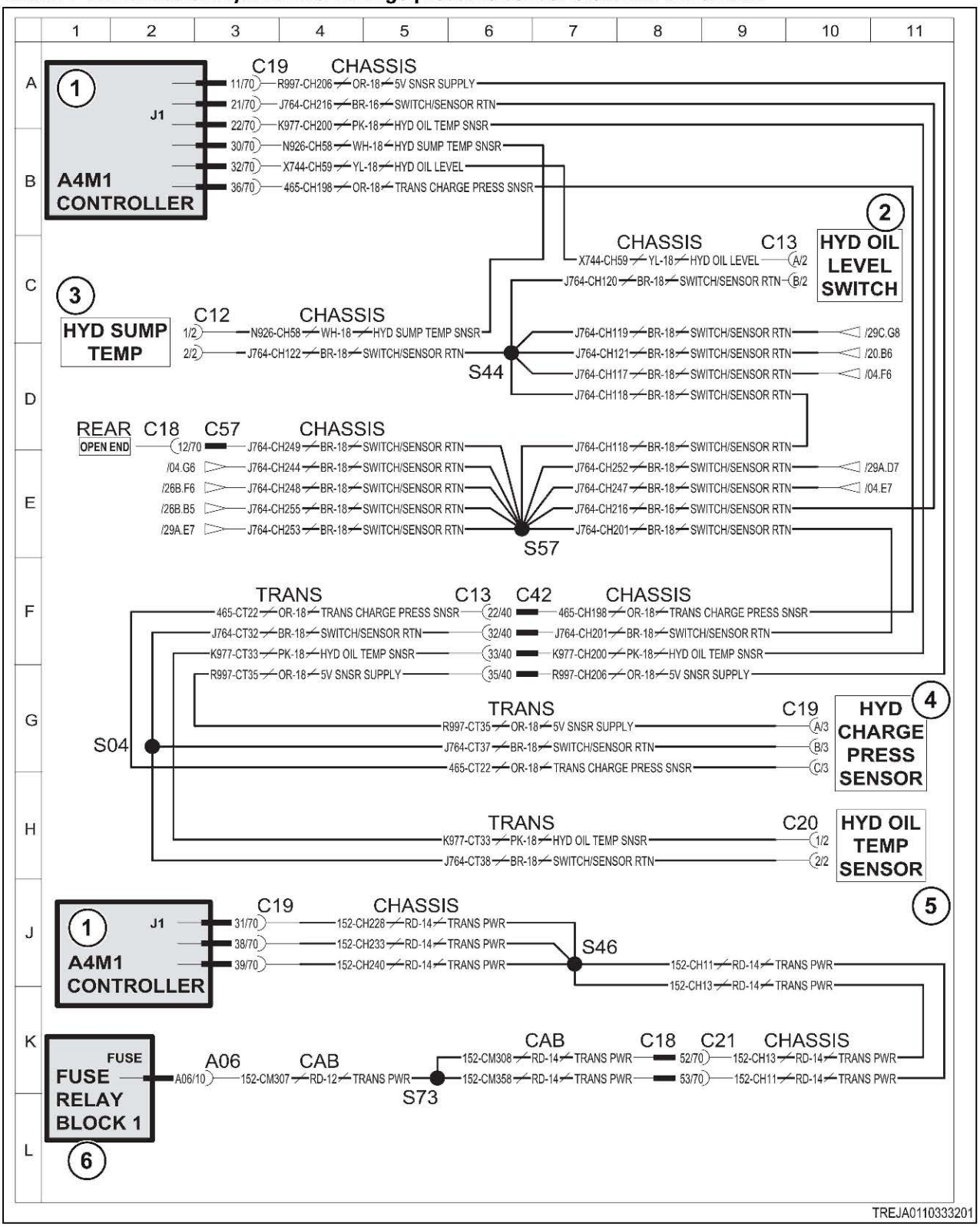

Fig. 135

Schematic legend		
Item	Schematic term	Description
1	A4M1 CONTROLLER	Transmission module
2	HYD OIL LEVEL SWITCH	Hydraulic oil level switch
3	HYD SUMP TEMP	Hydraulic sump temperature sensor
4	HYD CHARGE PRESS SENSOR	Hydraulic charge pressure sensor
5	HYD OIL TEMP SENSOR	Hydraulic oil temperature sensor
6	FUSE RELAY BLOCK 1	Fuse relay block 1
-	5V SNSR SUPPLY	5 volt sensor supply
-	SWITCH/SENSOR RTN	Switch/sensor return
-	TRANS CHARGE PRESS SNSR	Transmission charge pressure sensor
-	TRANS PWR	Transmission power

10.6.10 Code SA 03 SPN 177 FMI 04

The module detects that the signal voltage for the transmission hydraulic oil temperature sensor is too low.

The transmission oil temperature sensor is a temperature-controlled resistive element. The higher the temperature, the lower the resistance. The voltage is reported by the transmission module as too low, indicating a short circuit. The most likely cause is a faulty sensor or short circuit.

SA 03 SPN 177 FMI 04 and SA 03 SPN 1638 FMI 04 represent the same fault conditions for this machine, and either/both codes may be reported when those conditions exist.

Diagnosis and solution

1. Check the hydraulic oil temperature sensor resistance, at the sensor.

a) Turn the key start switch to the off position.
b) Disconnect the sensor from the harness.
c) Check the resistance from the sensor contact 1 to contact 2.
d) Compare the actual oil temperature with the resistance using the table below.

Temperature C (F)	Resistance (ohms)
0 C	3440
20 C	1249
60 C	248
99 C	70

Result

- The resistance is correct.

  Leave the sensor disconnected.

  See step 2 to check the harness for short to ground.
- The resistance is not correct (too low).

  Replace the hydraulic oil temperature sensor.

  See step 4 to Validate the repair

2. Check the harness for short circuit to ground.

a) Make sure the sensor is still disconnected from the previous step.
b) Disconnect the J1 harness connector from the transmission module.

c) Check the resistance from contacts 21 to 22 of the J1 harness connector at the transmission module .

Result

- The resistance is high (more than 1000 ohms).

  The harness is not shorted.

  See step 3 to check the sensor voltage.
- The resistance is at or near 0 ohms.

  The harness is shorted to ground.

  Repair or replace the harness.

  See step 4 to Validate the repair

3. Check the voltage at the transmission module.

a) Inspect and clean the sensor connector.
b) Connect the sensor to the harness.
c) Inspect and clean the J1 harness connector.
d) Connect the J1 connector to the transmission module.
e) Turn the key start switch to the on position.
f) Check the voltage from contact J1-21 to J1-22 at the transmission module.

Result

- If the voltage is at or near 0 volts, the transmission module ouput power to the sensor is faulty.

  Replace the transmission module.

4. Check if the diagnostic code remains.

a) Check and clean the harness connector contacts.
b) Connect all the connectors.
c) Turn the key start switch to the on position.
d) Operate the machine at low idle.
e) Check if the diagnostic code remains.

Result

Expected result - the diagnostic code is not active.

Results:

- Yes - SPN 177 FMI 04 is not active.

  Stop.
- No - SPN 177 FMI 04 is active.

  Failure of the transmission module is possible but not common. Exit the procedure and do the procedure again. If the diagnostic code remains active, replace the module.

  Stop.

10.6.10.1 Transmission hydraulic oil charge pressure sensor electrical schematic

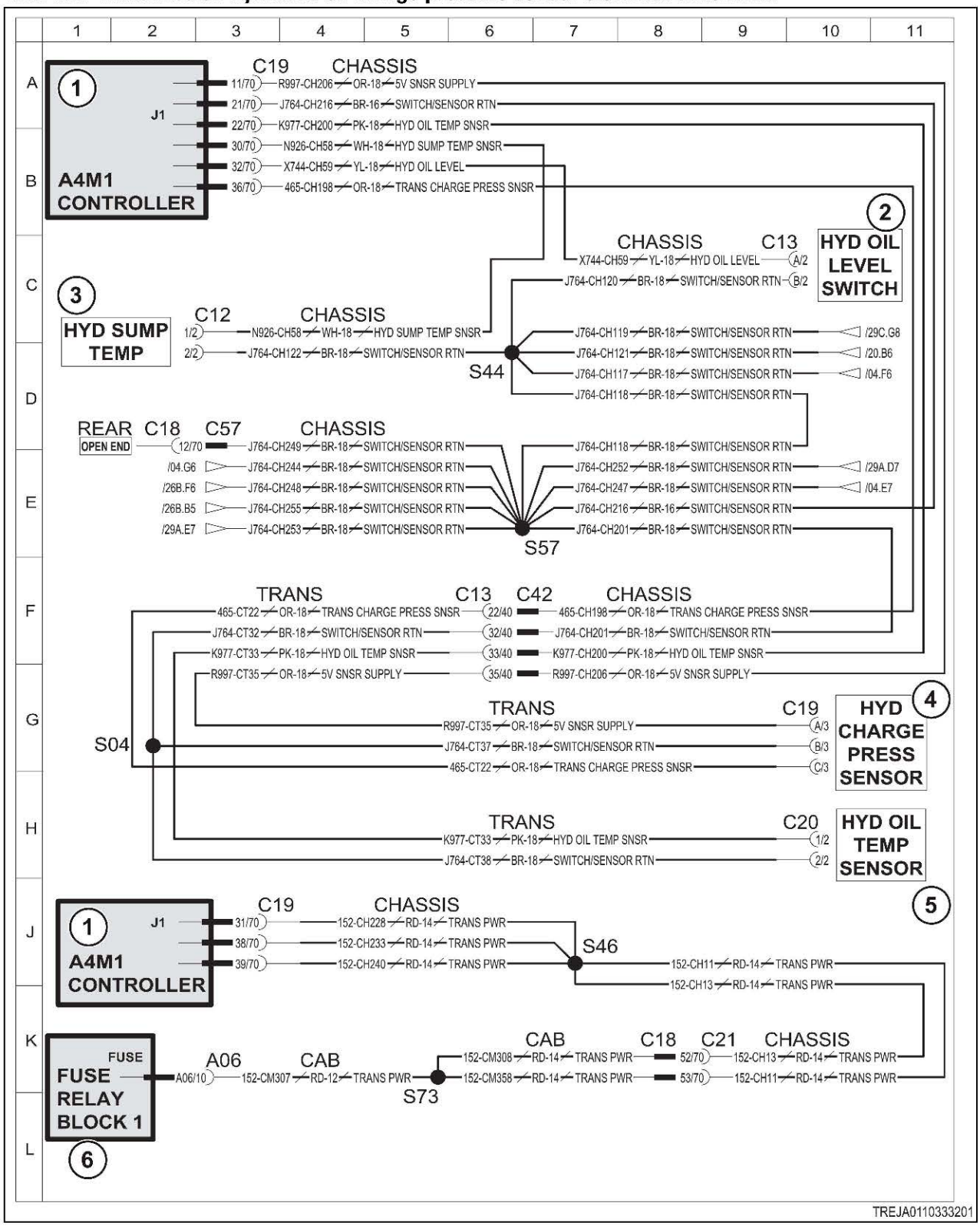

Fig. 136

Schematic legend		
Item	**Schematic term**	**Description**
1	A4M1 CONTROLLER	Transmission module
2	HYD OIL LEVEL SWITCH	Hydraulic oil level switch
3	HYD SUMP TEMP	Hydraulic sump temperature sensor
4	HYD CHARGE PRESS SENSOR	Hydraulic charge pressure sensor
5	HYD OIL TEMP SENSOR	Hydraulic oil temperature sensor
6	FUSE RELAY BLOCK 1	Fuse relay block 1
-	5V SNSR SUPPLY	5 volt sensor supply
-	SWITCH/SENSOR RTN	Switch/sensor return
-	TRANS CHARGE PRESS SNSR	Transmission charge pressure sensor
-	TRANS PWR	Transmission power

10.6.11 Code SA 03 SPN 177 FMI 14

The transmission oil temperature signal is erratic.

The transmission module is detecting an erratic signal from the temperature sensor. The most likely cause is a loose connection in the machine wiring.

Procedure

1. Determine when the error condition occurs.
- a) Turn the key start switch to the on position.
- b) Start the engine.
- c) Operate the engine at high idle to warm the transmission.
- d) Stop the engine.
- e) Turn the key start switch to the on position, but do not start the engine.
- f) Observe whether the error code is reported.
- g) Start the engine, and as necessary, operate the machine at low idle, high idle, and travelling to create vibration in the machine.
- h) Observe whether the error code is reported.

Result

- The error code was reported regardless whether the machine was running or not.

  See step 2 to check the sensor.
- The error code is reported only when the machine is vibrating.

  See step 3 to check for loose connections.

2. Check the hydraulic oil temperature sensor.
- a) Turn the key start switch to the off position.
- b) Turn the battery disconnect switch to the off position.
- c) Check the resistance from hydraulic oil temperature sensor contact 1 to contact 2.
- d) Compare the actual oil temperature with the resistance using the table below.

Temperature C (F)	Resistance (ohms)
0 C	3440
20 C	1249
60 C	248
99 C	70

Result

- The resistance is correct.

  See step 3 to check for loose connections.
- The resistance is not correct.

  Replace the hydraulic oil temperature sensor.

  See step 4 to validate the repair.

3. Inspect all harness and sensor connections.

a) Turn the key start switch to the off position.
b) Turn the battery disconnect switch to the off position.
c) Inspect and clean all connectors and connector contacts:

- Look for bent or worn pins.
- Look for deformed or oversized sockets.
- Look for corrosion on the pins and sockets. Corrosion is a sign of a loose connection.
- Look for signs of overheating. Overheating is a sign of a poor connection, and can further loosen the pin or socket mount. The whole connector body should be replaced.

d) Make sure to inspect the following connector locations:

- Connector C20 at the temperature sensor.
- Transmission harness to chassis harness connector contacts 32 and 33 of connectors C13 and C37.
- Transmission module J1-22 and J1-21 connector contacts .

e) Repair or replace any connector or harness found faulty.
f) See step 4 to validate the repair.

4. Check if the diagnostic code remains.

a) Connect all the connectors.
b) Turn the key start switch to the on position.
c) Start the engine, and as necessary, operate the machine at low idle, high idle, and travelling to create vibration in the machine.
d) Check if the diagnostic code remains.

Result

- SPN 177 FMI 14 is not active.

  Stop.
- SPN 177 FMI 14 is active.

  Failure of the transmission module is possible but not common. Exit the procedure and do the procedure again. If the diagnostic code remains active, replace the module.

  Stop.

10.6.11.1 Transmission hydraulic oil charge pressure sensor electrical schematic

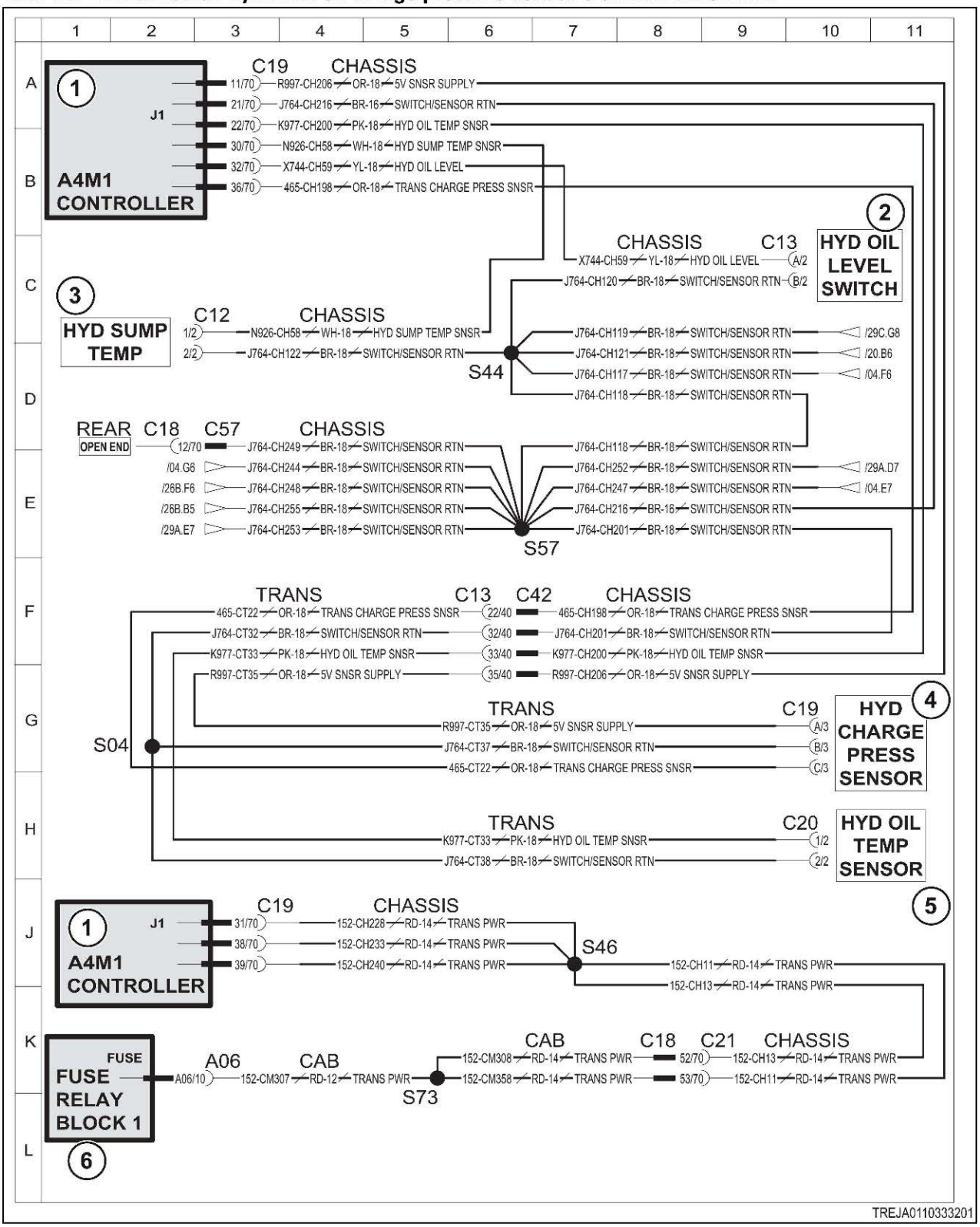

Fig. 137

Schematic legend		
Item	Schematic term	Description
1	A4M1 CONTROLLER	Transmission module
2	HYD OIL LEVEL SWITCH	Hydraulic oil level switch
3	HYD SUMP TEMP	Hydraulic sump temperature sensor
4	HYD CHARGE PRESS SENSOR	Hydraulic charge pressure sensor
5	HYD OIL TEMP SENSOR	Hydraulic oil temperature sensor
6	FUSE RELAY BLOCK 1	Fuse relay block 1
-	5V SNSR SUPPLY	5 volt sensor supply
-	SWITCH/SENSOR RTN	Switch/sensor return
-	TRANS CHARGE PRESS SNSR	Transmission charge pressure sensor
-	TRANS PWR	Transmission power

10.6.12 Code SA 03 SPN 191 FMI 00

The module detects that the transmission output shaft speed sensor voltage is above normal range.

The signal frequency of the output shaft speed sensor is above the normal operating range. This error is not likely to occur on its own. Diagnose any other error codes before diagnosing this error code.

The transmission output shaft speed and direction are determined by a pair of proximity sensors at the front of the transmission housing. The speed of the shaft is determined by the frequency of the pulses from the first sensor, and the direction of rotation is determined by the lead-time or lag-time of the second sensor detecting a separate tooth. The sensors are positioned approximately 1/4-tooth out of phase with each other, with respect to the reluctor ring teeth. This results in the second sensor detecting a tooth slightly before, or slightly after the first sensor, depending on the direction of rotation of the shaft.

Diagnosis and solution

1. Inspect the output shaft speed sensors.
   a) Turn the key start switch to the off position.
   b) Turn the battery disconnect switch to the off position.
   c) Remove both output shaft speed sensors from the transmission housing.
   d) Inspect the sensor for foreign material and clean.
   e) Check resistance of the sensor(s) between contact 1 and contact 2.

   Result

   - The resistance reading is between 600 and 1800 ohms.

     The sensor itself is not likely the fault.

     See step 2 to check the sensor's position during reinstallation.
   - The resistance reading is not between 600 and 1800 ohms.

     Replace the shaft speed sensor.

     See step 4 to validate the repair.

2. Reinstall the sensors.
   a) Inspect the O-ring and replace if necessary.
   b) Clean the surface of the transmission housing where the sensor seats.
   c) Make sure the sensor is fully seated into the transmission housing.
   d) Secure the sensor and make sure the retaining bracket is firmly seated against the sensor.
   e) Continue to step 3.

3. Check the harness for continuity.

a) Connect the harness connector to the speed sensors.

b) Disconnect the transmission module J1 connector.

c) Check the resistance between contacts J1-15 to J1-16 on the transmission module harness connector.

Result

- The resistance is between 600 and 1800 ohms.

  The harness is not open or shorted.

  See step 4 to check if the error persists.
- The resistance is at or near 0 ohms.

  The harness is shorted.

  Repair or replace the harness.

  See step 4 to validate the repair.
- The resistance is above 1800 ohms, but not open circuit.

  Check the harness for corroded connections.

  See step 4 to validate the repair.
- The resistance is indicating open circuit.

  Repair or replace the harness.

  See step 4 to validate the repair.

4. Check if the diagnostic code remains.

a) Check and clean the harness connector contacts.

b) Connect all the connectors.

c) Turn the battery disconnect switch to the on position.

d) Turn the key start switch to the on position.

e) Operate the machine at low idle.

f) Check if the diagnostic code remains.

Result

- SPN 191 FMI 00 is not active.

  Stop.
- SPN 191 FMI 00 is active.

  Replace the sensor and repeat this step.

  Failure of the transmission module is possible but not common. Exit the procedure and do the procedure again. If the diagnostic code remains active, replace the module.

  Stop.

10.6.12.1 Transmission input shaft speed sensor electrical schematic

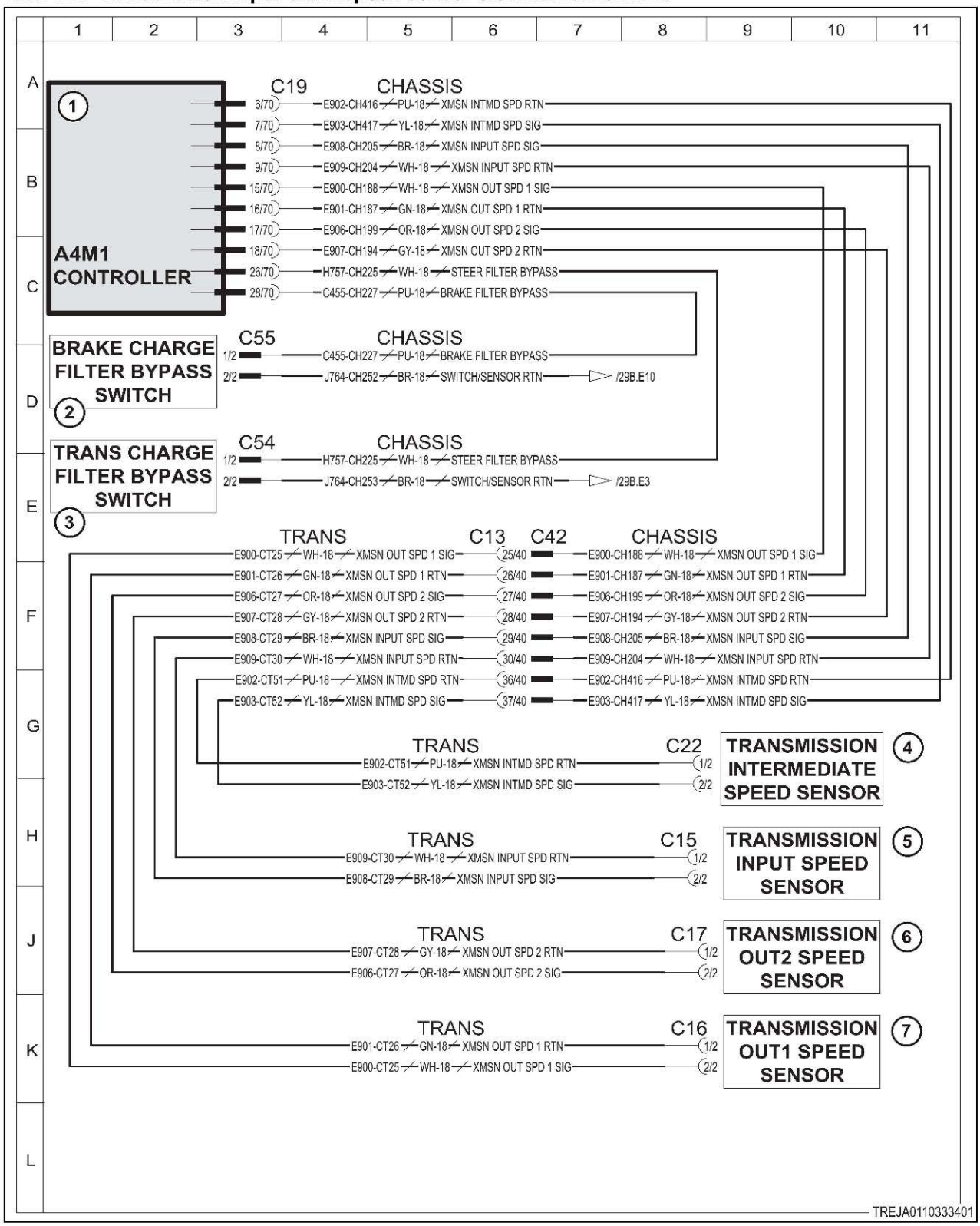

Fig. 138

Schematic legend		
Item	Schematic term	Description
1	A4M1 CONT	Transmission module
2	BRAKE CHARGE FILTER BYPASS SWITCH	Brake charge filter bypass switch
3	TRANS CHARGE FILTER BYPASS SWITCH	Transmission charge filter bypass switch
4	TRANSMISSION INTERMEDIATE SPEED SENSOR	Transmission intermediate speed sensor
5	TRANSMISSION INPUT SPEED SENSOR	Transmission input speed sensor
6	TRANSMISSION OUT 2 SPEED SENSOR	Transmission output speed sensor 2
7	TRANSMISSION OUT 1 SPEED SENSOR	Transmission output speed sensor 1
--	STEERING FILTER BYPASS	Steering filter bypass
--	BRAKE FILTER BYPASS	Brake filter bypass
--	SWITCH/SENSOR RTN	Switch/sensor return
--	XMSN OUT SPD SIG	Transmission output speed signal
--	XMSN OUT SPD RTN	Transmission output speed return
--	XMSN INPUT SPD RTN	Transmission input speed return
--	XMSN INPUT SPD SIG	Transmission input speed signal

10.6.13 Code SA 03 SPN 191 FMI 12

The module detects that the signal frequency or pulse width of the transmission output shaft speed sensor is not within normal range.

The signal data from the output shaft speed sensor is invalid. The most likely cause is a faulty sensor.

The transmission output shaft speed and direction are determined by a pair of proximity sensors at the front of the transmission housing. The speed of the shaft is determined by the frequency of the pulses from the first sensor, and the direction of rotation is determined by the lead-time or lag-time of the second sensor detecting a separate tooth. The sensors are positioned approximately 1/4-tooth out of phase with each other, with respect to the reluctor ring teeth. This results in the second sensor detecting a tooth slightly before, or slightly after the first sensor, depending on the direction of rotation of the shaft.

Diagnosis and solution

1. Inspect the output shaft speed sensors.

a) Turn the key start switch to the off position.
b) Turn the battery disconnect switch to the off position.
c) Remove both output shaft speed sensors from the transmission housing.
d) Inspect the sensor for foreign material and clean.
e) Check resistance of the sensor(s) between contact 1 and contact 2.

Result

- The resistance reading is between 600 and 1800 ohms.

  The sensor itself is not likely the fault.

  See step 2 to check the sensor's position during reinstallation.
- The resistance reading is not between 600 and 1800 ohms.

  Replace the shaft speed sensor.

  See step 4 to validate the repair.

2. Reinstall the sensors.

a) Inspect the O-ring and replace if necessary.
b) Clean the surface of the transmission housing where the sensor seats.
c) Make sure the sensor is fully seated into the transmission housing.
d) Secure the sensor and make sure the retaining bracket is firmly seated against the sensor.
e) Continue to step 3.

3. Check the harness for continuity.
a) Connect the harness connector to the speed sensors.
b) Disconnect the transmission module J1 connector.
c) Check the resistance between contacts J1-15 to J1-16 on the transmission module harness connector.

Result

- The resistance is between 600 and 1800 ohms.

  The harness is not open or shorted.

  See step 4 to check if the error persists.
- The resistance is at or near 0 ohms.

  The harness is shorted.

  Repair or replace the harness.

  See step 4 to validate the repair.
- The resistance is above 1800 ohms, but not open circuit.

  Check the harness for corroded connections.

  See step 4 to validate the repair.
- The resistance is indicating open circuit.

  Repair or replace the harness.

  See step 4 to validate the repair.

4. Check if the diagnostic code remains.
a) Check and clean the harness connector contacts.
b) Connect all the connectors.
c) Turn the battery disconnect switch to the on position.
d) Turn the key start switch to the on position.
e) Operate the machine at low idle.
f) Check if the diagnostic code remains.

Result

- SPN 191 FMI 12 is not active.

  Stop.
- SPN 191 FMI 12 is active.

  Replace the sensor and repeat this step.

  Failure of the transmission module is possible but not common. Exit the procedure and do the procedure again. If the diagnostic code remains active, replace the module.

  Stop.

10.6.13.1 Transmission input shaft speed sensor electrical schematic

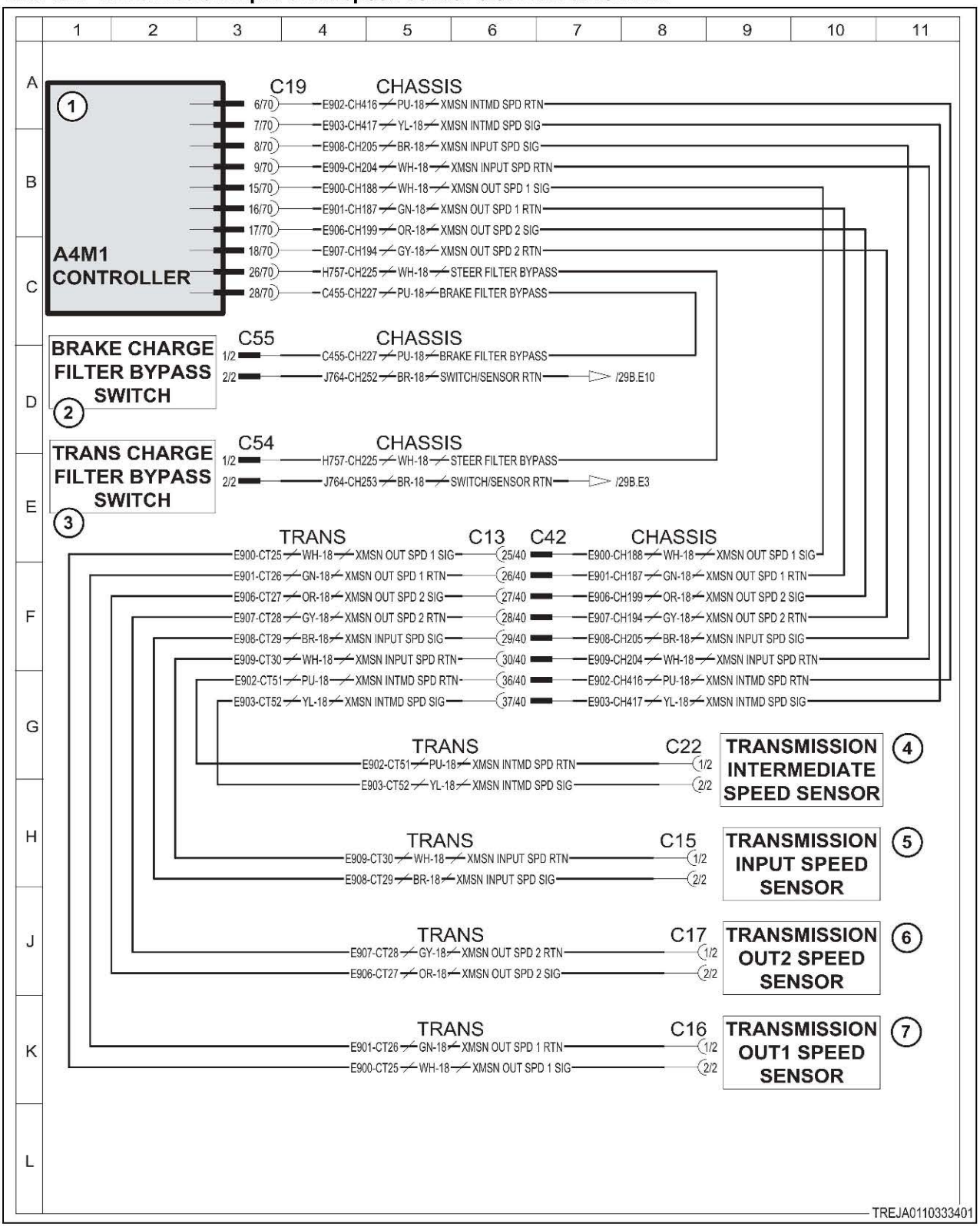

Fig. 139

Schematic legend		
Item	Schematic term	Description
1	A4M1 CONT	Transmission module
2	BRAKE CHARGE FILTER BYPASS SWITCH	Brake charge filter bypass switch
3	TRANS CHARGE FILTER BYPASS SWITCH	Transmission charge filter bypass switch
4	TRANSMISSION INTERMEDIATE SPEED SENSOR	Transmission intermediate speed sensor
5	TRANSMISSION INPUT SPEED SENSOR	Transmission input speed sensor
6	TRANSMISSION OUT 2 SPEED SENSOR	Transmission output speed sensor 2
7	TRANSMISSION OUT 1 SPEED SENSOR	Transmission output speed sensor 1
–	STEERING FILTER BYPASS	Steering filter bypass
–	BRAKE FILTER BYPASS	Brake filter bypass
–	SWITCH/SENSOR RTN	Switch/sensor return
–	XMSN OUT SPD SIG	Transmission output speed signal
–	XMSN OUT SPD RTN	Transmission output speed return
–	XMSN INPUT SPD RTN	Transmission input speed return
–	XMSN INPUT SPD SIG	Transmission input speed signal

10.6.14 Code SA 03 SPN 473 FMI 03

The module detects that the charge pressure sensor circuit voltage is above normal range.

The transmission module has detected that the voltage from the hydraulic oil pressure sensor is out of range for what the sensor can normally report. The most likely cause is a faulty sensor or a short to positive power.

Diagnosis and solution

1. Check the signal and power voltages of the oil pressure sensor at the sensor. (The sensor is located just below and aft of the transmission module on the top of the transmission.)
   a) See the information for the transmission hydraulic test and adjust section in the service manual.
   b) Turn the key start switch to the on position.
   c) Operate the engine at high idle.
   d) Make sure the transmission hydraulic pressure is at least 2206 kPa (320 psi).
   e) Check the voltage (sensor power) between contacts A and B at the sensor connector.
   f) Check the voltage (signal voltage) between contacts B and C at the sensor connector.

   Result

   - The sensor's power voltage is at or near 0V.

     The sensor is not getting power. Check for open circuit in the ground wire.

     See step 2 to check for open circuit on the ground wire.
   - Sensor power is 5V and the signal voltage is 3.4 volts.

     The sensor is working correctly. Check for open circuit in the signal wire.

     See step 2 to check for open circuit on the signal wire.

- Sensor power is 5V, and the signal voltage is near or above 5 volts.

  Either the sensor is faulty, or the signal wire is shorted to positive power.

  Check the harness for short to power.

  See step 4 to check for short to power.

2. Check the harness for open circuit on the ground or signal wires.

a) Turn the key start switch to the off position.
b) Turn the battery disconnect switch to the off position.
c) Disconnect the J1 connector from the transmission module.
d) Disconnect the pressure sensor from the harness.
e) Install a shorting jumper between contacts B and C of the sensor harness connector.
f) Check resistance from contacts J1-36 to J1-21 on the transmission module harness.

Result

- The resistance is more than a few ohms (open circuit or corroded connection).

  Repair or replace the harness.

  See step 5 to validate the repair.
- The resistance is at or near 0 ohms (not open circuit), but the sensor's power voltage from previous step was 0 volts.

  The sensor is faulty.

  Replace the pressure sensor.

  See step 5 to validate the repair.
- The resistance is at or near 0 ohms (not open circuit), but the sensor's signal voltage from the previous step was 3.4 volts.

  The transmission module may be defective. Confirm the voltage at the module.

  See step 3 to check the signal voltage at the module.

3. Check the signal voltage at the transmission module.

a) Inspect and clean the sensor harness connector.
b) Connect the sensor to the harness.
c) Inspect and clean the J1 harness connector.
d) Reconnect the J1 harness connector to the transmission module.
e) Turn the key start switch to the on position.
f) Operate the engine at high idle.
g) Make sure the transmission hydraulic pressure is at least 2206 kPa (320 psi).
h) Check the voltage (sensor signal) between contacts J1-36 and J1-21 at the transmission module connector.

Result

- The voltage at the module is 3.4 volts and the error persists.

  Replace the transmission module.

  See step 5 to validate the repair.

4. Check the harness for a short to power.

a) Remove the shorting jumper from the sensor harness.
b) Make sure the transmission module and sensor are still disconnected from the previous step.
c) Check the resistance from contact J1-36 to all other contacts on the J1 connector.

Result

- All resistance readings are high (open circuit).

  Replace the pressure sensor

  See step 5 to validate the repair.
- Any resistance reading is at or near 0 ohms.

  Repair or replace the harness.

  See step 5 to validate the repair.

5. Check if the diagnostic code remains.

a) Check and clean the harness connector contacts.
b) Connect all the connectors.
c) Turn the battery disconnect switch to the on position.
d) Turn the key start switch to the on position.
e) Operate the machine at low idle.
f) Check if the diagnostic code remains.

Result

Expected result - the diagnostic code is not active.

Results:

- Yes - SPN 473 FMI 03 is not active.

  Stop.
- No - SPN 473 FMI 03 is active.

  Failure of the transmission module is possible but not common. Exit the procedure and do the procedure again. If the diagnostic code remains active, replace the module.

  Stop.

10.6.14.1 Transmission hydraulic oil charge pressure sensor electrical schematic

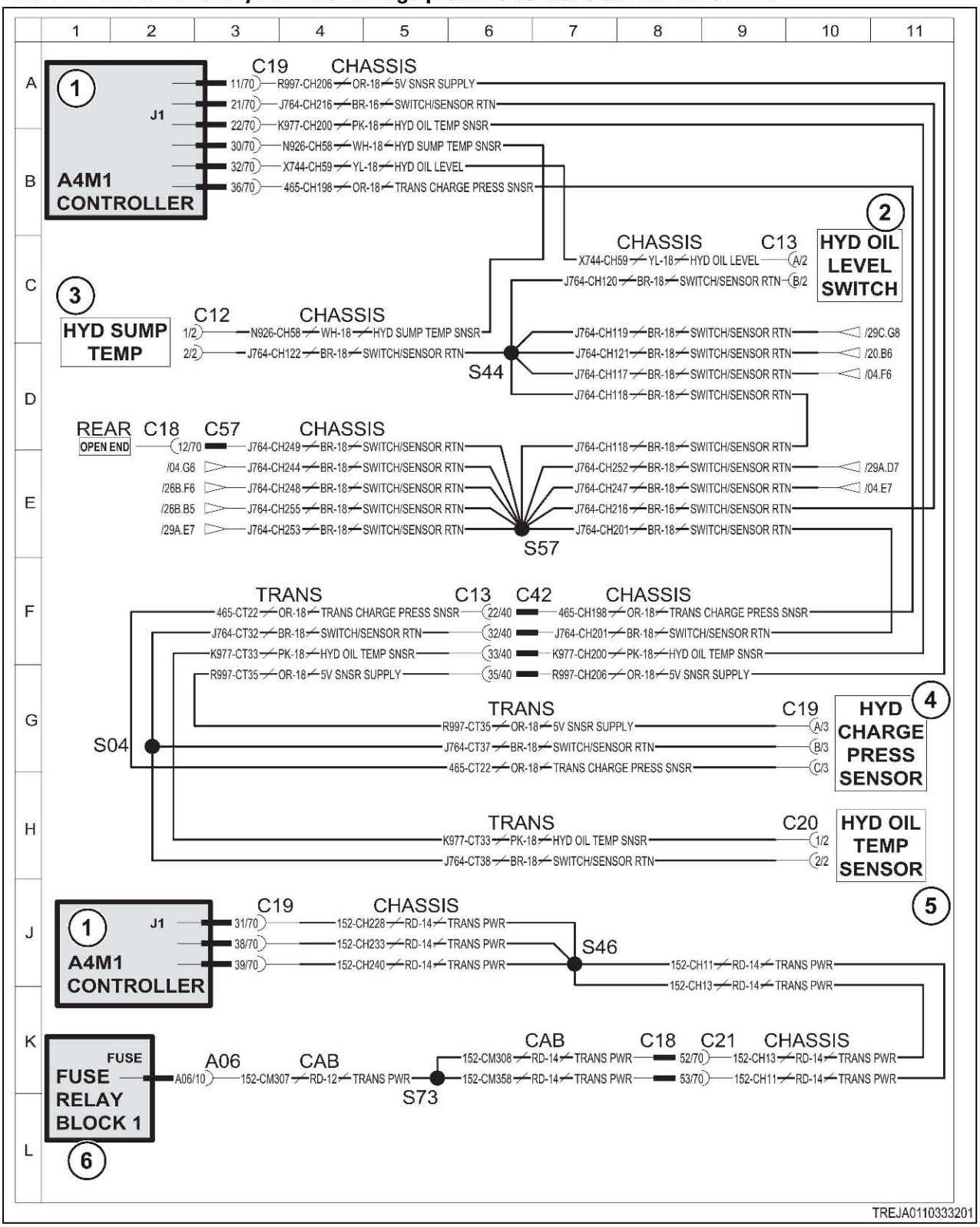

Fig. 140

Schematic legend		
Item	**Schematic term**	**Description**
1	A4M1 CONTROLLER	Transmission module
2	HYD OIL LEVEL SWITCH	Hydraulic oil level switch
3	HYD SUMP TEMP	Hydraulic sump temperature sensor
4	HYD CHARGE PRESS SENSOR	Hydraulic charge pressure sensor
5	HYD OIL TEMP SENSOR	Hydraulic oil temperature sensor
6	FUSE RELAY BLOCK 1	Fuse relay block 1
-	5V SNSR SUPPLY	5 volt sensor supply
-	SWITCH/SENSOR RTN	Switch/sensor return
-	TRANS CHARGE PRESS SNSR	Transmission charge pressure sensor
-	TRANS PWR	Transmission power

10.6.15 Code SA 03 SPN 473 FMI 04

The module detects that the voltage for the charge pressure sensor circuit is below normal range.

The transmission module has detected that the voltage from the hydraulic oil pressure sensor is out of range for what the sensor can normally report. The most likely cause is a faulty sensor or a short to ground.

Diagnosis and solution

1. Check the signal and power voltages of the oil pressure sensor at the sensor. (The sensor is located just below and aft of the transmission module on the top of the transmission.)

a) See the information for the transmission hydraulic test and adjust section in the service manual.
b) Turn the key start switch to the on position.
c) Operate the engine at high idle.
d) Make sure the transmission hydraulic pressure is at least 2206 kPa (320 psi).
e) Check the voltage (sensor power) between contacts A and B at the sensor connector.
f) Check the voltage (signal voltage) between contacts B and C at the sensor connector.

Result

- Sensor power is 5V, and the signal voltage is at or near or 0 volts.

  Either the sensor is faulty, or the signal wire is shorted to ground.

  See step 2 to check the harness for short to ground.
- Sensor power is 5V and the signal voltage is 3.4 volts.

  The sensor is working.

  See step 3 to check the voltage seen by the transmission module.
- The sensor's power voltage is at or near 0V.

  The sensor or harness is shorted to ground.

  See step 4 to check voltage at the transmission module.

2. Check the harness for a short to ground.

a) Turn the key start switch to the off position.
b) Disconnect the sensor from the harness connector.
c) Disconnect the J1 connector from the transmission module.
d) Check the resistance from contact J1-36 to all other contacts on the J1 connector.

Result

- All resistance readings are high (open circuit).

  Replace the pressure sensor

  See step 5 to validate the repair.
- Any resistance reading is at or near 0 ohms.

  Repair or replace the harness.

  See step 5 to validate the repair.

3. Check the signal voltage at the transmission module.

a) Make sure the machine is still running and the sensor still connected from the previous step.

b) Check voltage between contacts J1-21 and J1-36 on the transmission module harness.

Result

- If the voltage is 3.4 volts and the error persists, the transmission module is faulty.

  Replace the transmission module.

  See step 5 to validate the repair.
- If the voltage is at or near 0 volts, the harness may have both a short circuit and open circuit.

  Repair or replace the harness.

  See step 5 to validate the repair.

4. Check the sensor power voltage at the transmission module, with and without the sensor connected.

a) Make sure the machine is still running and all connections are still made from the previous step.

b) Check the voltage (sensor power) between contacts J1-11 and J1-21 at the transmission module connector.

c) Disconnect the sensor connector at the sensor.

d) Re-check the voltage (sensor power) between contacts J1-11 and J1-21 at the transmission module connector.

Result

- The voltage at the module was 5 volts for both steps.

  The harness power wire is open circuit.

  Repair or replace the harness.

  See step 5 to validate the repair.
- The voltage at the module was 0 volts for both steps.

  The harness is shorted to ground.

  Repair or replace the harness.

  See step 5 to validate the repair.
- The voltage at the module changed from 0 volts to 5 volts after the sensor was disconnected.

  The sensor is shorted.

  Replace the sensor.

  See step 5 to validate the repair.

5. Check if the diagnostic code remains.

a) Check and clean the harness connector contacts.

b) Connect all the connectors.

c) Turn the battery disconnect switch to the on position.

d) Turn the key start switch to the on position.

e) Operate the machine at low idle.

f) Check if the diagnostic code remains.

Result

- SPN 473 FMI 04 is not active.

  Stop.
- SPN 473 FMI 04 is active.

  Failure of the transmission module is possible but not common. Exit the procedure and do the procedure again. If the diagnostic code remains active, replace the module.

  Stop.

10.6.15.1 Transmission hydraulic oil charge pressure sensor electrical schematic

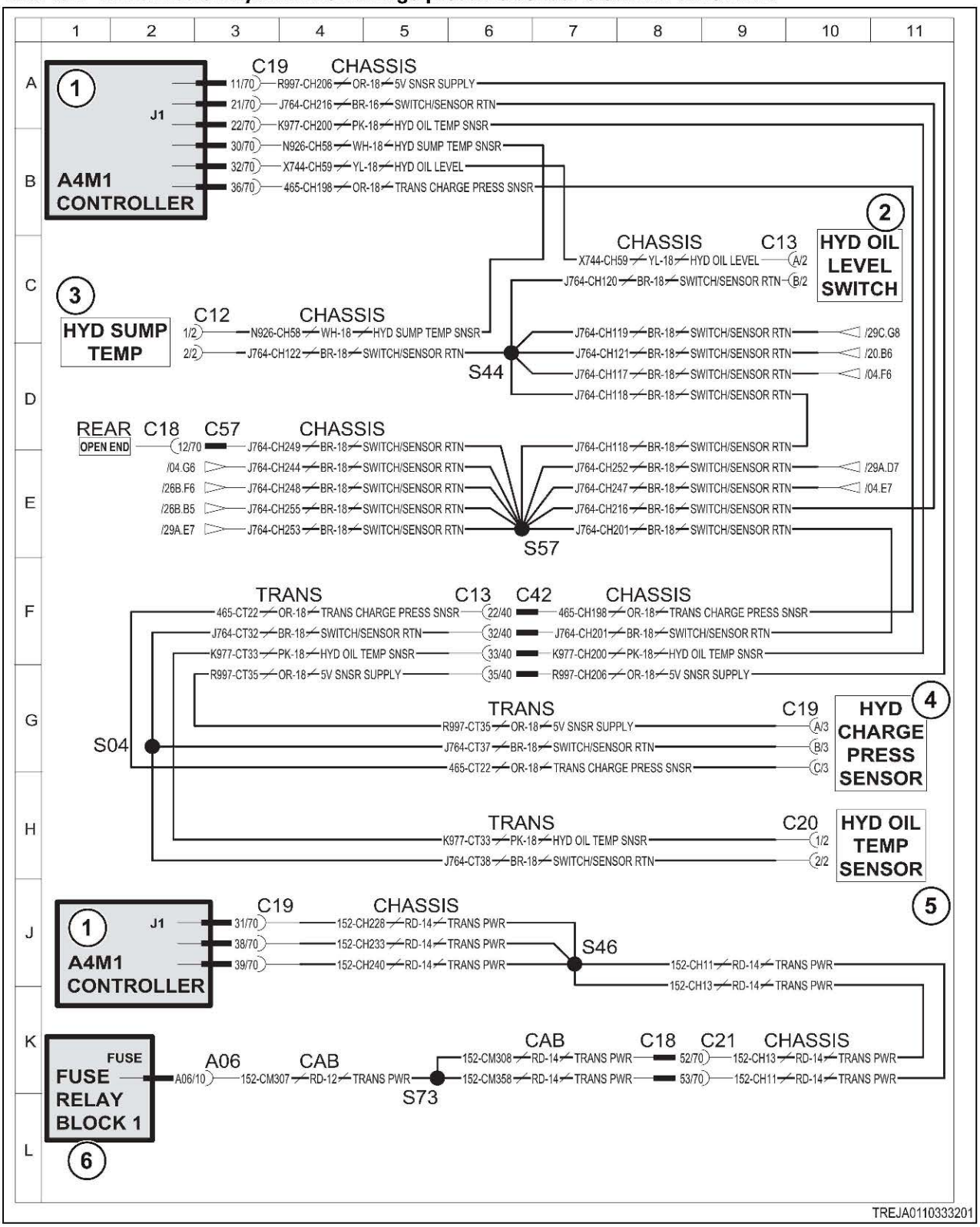

Fig. 141

Schematic legend		
Item	Schematic term	Description
1	A4M1 CONTROLLER	Transmission module
2	HYD OIL LEVEL SWITCH	Hydraulic oil level switch
3	HYD SUMP TEMP	Hydraulic sump temperature sensor
4	HYD CHARGE PRESS SENSOR	Hydraulic charge pressure sensor
5	HYD OIL TEMP SENSOR	Hydraulic oil temperature sensor
6	FUSE RELAY BLOCK 1	Fuse relay block 1
-	5V SNSR SUPPLY	5 volt sensor supply
-	SWITCH/SENSOR RTN	Switch/sensor return
-	TRANS CHARGE PRESS SNSR	Transmission charge pressure sensor
-	TRANS PWR	Transmission power

10.6.16 Code SA 03 SPN 564 FMI 03

The differential lock solenoid circuit voltage is above normal.

Diagnosis and solution

1. Check the solenoid circuit for a short-circuit.
a) Turn the key start switch to the off position.
b) Turn the battery disconnect switch to the off position.
c) Remove the key from the battery disconnect switch.
d) Disconnect the harness connectors from the differential lock solenoid and transmission module.
e) Check resistance from the transmission module connector contact J1-12 to all other J1 and J2 harness connector contacts.

Result

Expected result - each resistance is more than 5000 ohms.

Results:

- Yes - each resistance is more than 5000 ohms.

  see step 2, page 10-215
- No - one or more resistance is not more than 5000 ohms.

  Repair or replace the harness.

  see step 2, page 10-215

2. Check if the diagnostic code remains.
a) Check and clean the harness connector contacts.
b) Connect all the connectors.
c) Turn the battery disconnect switch to the on position.
d) Turn the key start switch to the on position.
e) Operate the machine at low idle.
f) Check if the diagnostic code remains.

Result

Expected result - the diagnostic code is not active.

Results:

- Yes - SPN 564 FMI 03 is not active.

  Stop.
- No - SPN 564 FMI 03 is active.

  Failure of the transmission module is possible but not common. Exit the procedure and do the procedure again. If the diagnostic code remains active, replace the module.

  Stop.

10.6.16.1 Differential lock electrical schematic

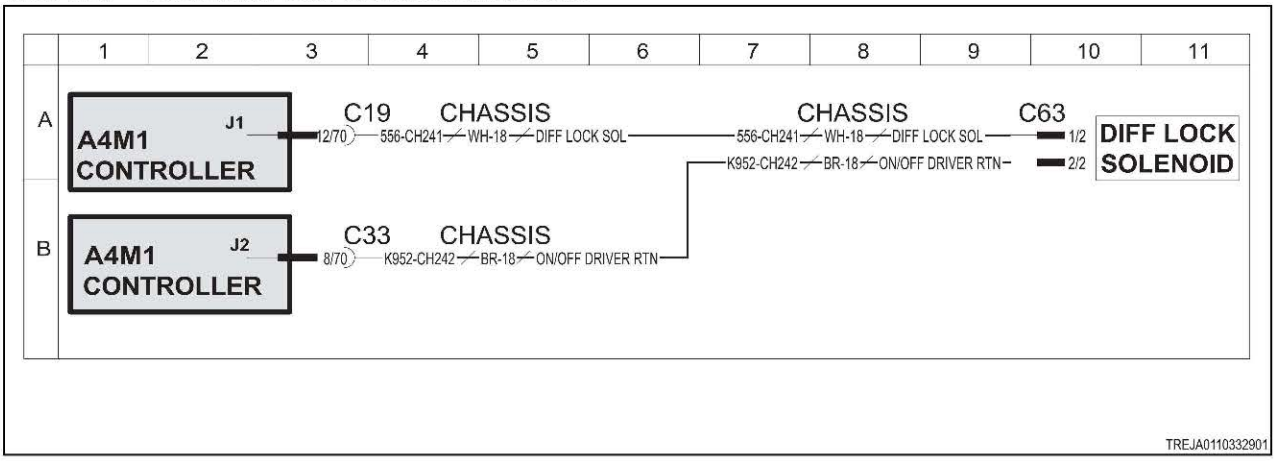

Fig. 142

Schematic legend		
Item	Schematic term	Description
1	A4M1 CONTROLLER	Transmission module
2	DIFF LOCK SOLENOID	Differential lock solenoid
-	CHASSIS	Chassis
-	DIFF LOCK SOL	Differential lock solenoid
-	ON/OFF DRIVER RTN	On/off driver return

10.6.17 Code SA 03 SPN 564 FMI 05

The differential lock solenoid circuit voltage is below normal.

Diagnosis and solution

1. Check the solenoid.
   a) Turn the key start switch to the off position.
   b) Turn the battery disconnect switch to the off position.
   c) Remove the key from the battery disconnect switch.
   d) Disconnect the harness connector from the differential lock solenoid.
   e) Check the resistance from the differential lock solenoid connector contact 1 to contact 2 .

   Result

   Expected result - each resistance is between 6.8 ohms and 8.8 ohms.

Results:

- Yes - the resistance is between 6.8 ohms and 8.8 ohms.

  see step 2, page 10-217
- No - the resistance is not between 6.8 ohms and 8.8 ohms.

  Repair or replace the solenoid.

  see step 3, page 10-217

2. Check the harness for a short-circuit.

a) Turn the key start switch to the off position.
b) Turn the battery disconnect switch to the off position.
c) Remove the key from the battery disconnect switch.
d) Disconnect the harness connectors from the differential lock solenoid and transmission module.
e) At the differential lock solenoid harness connector, insert jumper wire between contact 1 and contact 2.
f) Check resistance from the transmission module connector contact J1-12 to J2-8 connector contacts.

Result

Expected result - each resistance is less than 5 ohms.

Results:

- Yes - the resistance is less than 5 ohms.

  see step 3, page 10-217
- No - the resistance is less than 5 ohms..

  Repair or replace the harness.

  see step 3, page 10-217

3. Check if the diagnostic code remains.

a) Check and clean the harness connector contacts.
b) Connect all the connectors.
c) Turn the battery disconnect switch to the on position.
d) Turn the key start switch to the on position.
e) Operate the machine at low idle.
f) Check if the diagnostic code remains.

Result

Expected result - the diagnostic code is not active.

Results:

- Yes - SPN 564 FMI 05 is not active.

  Stop.
- No - SPN 564 FMI 05 is active.

  Failure of the transmission module is possible but not common. Exit the procedure and do the procedure again. If the diagnostic code remains active, replace the module.

  Stop.

10.6.17.1 Differential lock electrical schematic

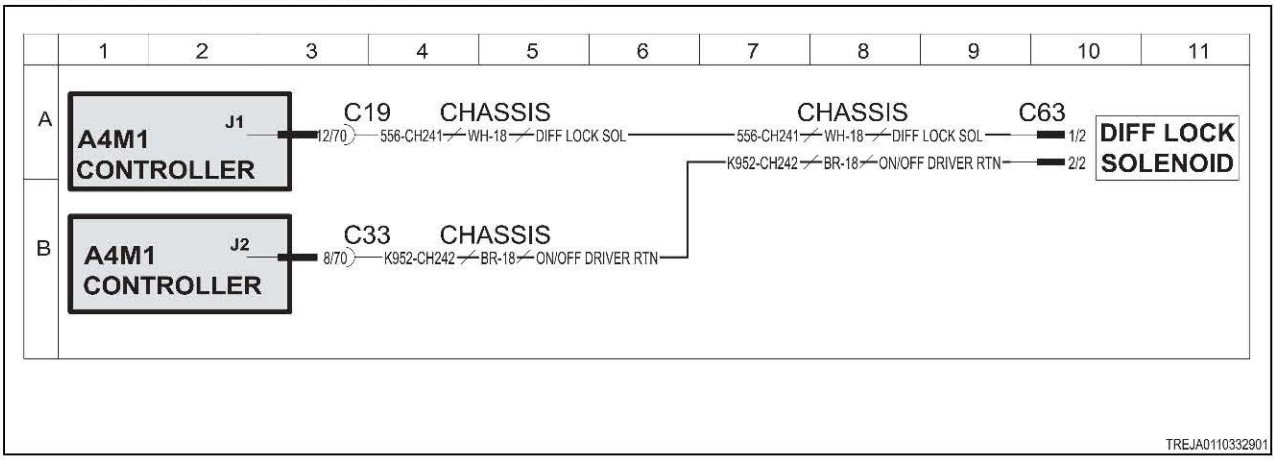

Fig. 143

Schematic legend		
Item	Schematic term	Description
1	A4M1 CONTROLLER	Transmission module
2	DIFF LOCK SOLENOID	Differential lock solenoid
-	CHASSIS	Chassis
-	DIFF LOCK SOL	Differential lock solenoid
-	ON/OFF DRIVER RTN	On/off driver return

10.6.18 Code SA 03 SPN 564 FMI 06

The differential lock solenoid circuit current is above normal.

Diagnosis and solution

1. Check the solenoid circuit for a short-circuit.
   a) Turn the key start switch to the off position.
   b) Turn the battery disconnect switch to the off position.
   c) Remove the key from the battery disconnect switch.
   d) Disconnect the harness connectors from the differential lock solenoid and transmission module.
   e) Check resistance from the transmission module connector contact J1-12 to all other J1 and J2 harness connector contacts.

Result

Expected result - each resistance is more than 5000 ohms.

Results:

- Yes - each resistance is more than 5000 ohms.

  see step 2, page 10-219

- No - one or more resistance is not more than 5000 ohms.

  Repair or replace the harness.

  see step 3, page 10-219

2. Check energize circuit for short to solenoid case.

a) Turn the key start switch to the off position.
b) Turn the battery disconnect switch to the off position.
c) Remove the key from the battery disconnect switch.
d) Disconnect the harness connector from the differential lock solenoid.
e) At solenoid measure resistance from solenoid contact 1 to solenoid case.

Result

Expected result - the resistance is open circuit.

Results:

- Yes - the resistance is open circuit.

  see step 3, page 10-219
- No - the resistance is open circuit.

  Repair or replace the solenoid.

  see step 3, page 10-219

3. Check if the diagnostic code remains.

a) Check and clean the harness connector contacts.
b) Connect all the connectors.
c) Turn the battery disconnect switch to the on position.
d) Turn the key start switch to the on position.
e) Operate the machine at low idle.
f) Check if the diagnostic code remains.

Result

Expected result - the diagnostic code is not active.

Results:

- Yes - SPN 564 FMI 06 is not active.

  Stop.
- No - SPN 564 FMI 06 is active.

  Failure of the transmission module is possible but not common. Exit the procedure and do the procedure again. If the diagnostic code remains active, replace the module.

  Stop.

10.6.18.1 Differential lock electrical schematic

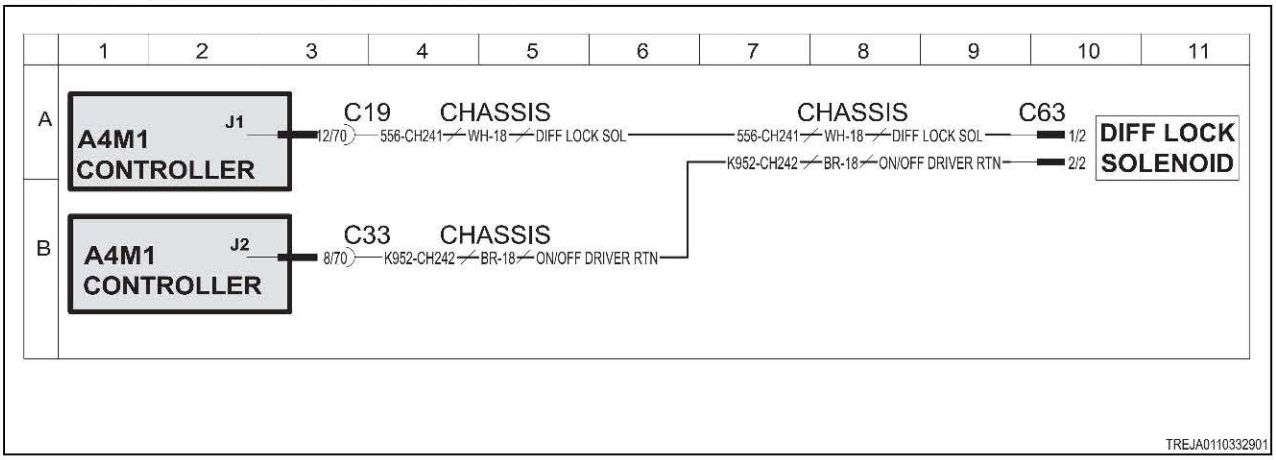

Fig. 144

Schematic legend		
Item	Schematic term	Description
1	A4M1 CONTROLLER	Transmission module
2	DIFF LOCK SOLENOID	Differential lock solenoid
-	CHASSIS	Chassis
-	DIFF LOCK SOL	Differential lock solenoid
-	ON/OFF DRIVER RTN	On/off driver return

10.6.19 Code SA 03 SPN 590 FMI 09

Intermittent or no communication from engine module.

Diagnosis and solution

1. Make sure the firmware for both the transmission module and engine module is up to date.
2. Inspect and clean the J2 harness connector at the transmission module.
3. Inspect and clean the machine harness connector at the engine module.
4. Check the CAN Bus resistance.
   a) Turn the key start switch to the off position.
   b) Turn the battery disconnect switch to the off position.
   c) Leave the engine module harness connected to the engine module.
   d) Disconnect the J2 connector from the transmission module.
   e) Check the resistance between contacts 67 and 68 of the J2 connector at the transmission harness connector.

   Result

   The CAN Bus resistance should be approximately 120 ohms.

- The resistance is at or near 120 ohms.

  If no other system modules are reporting communication errors, the engine module is likely faulty.

  Troubleshoot or replace the engine module.
- The resistance is above 120 ohms.

  The harness is open circuited or has corroded connections.

  Repair or replace the harness.
- The resistance is at or near 0 ohms.

  The harness is short circuited.

  Repair or replace the harness.

5. Check if the diagnostic code remains.

a) Check the contacts of the connectors and clean the contacts.
b) Connect all the connectors.
c) Turn the battery disconnect switch to the on position.
d) Turn the key start switch to the on position.
e) Turn on the engine.
f) Operate the engine at high idle.
g) Check if the diagnostic code remains.

Result

Expected result - the diagnostic code is not active.

Results:

- Yes - SPN 590 FMI 09 is not active.

  Stop.
- No - SPN 590 FMI 09 is active.

  Failure of the transmission module is possible but not common. Exit the procedure and do the procedure again. If the diagnostic code remains active, replace the module.

  Stop.

10.6.19.1 CAN electrical schematic

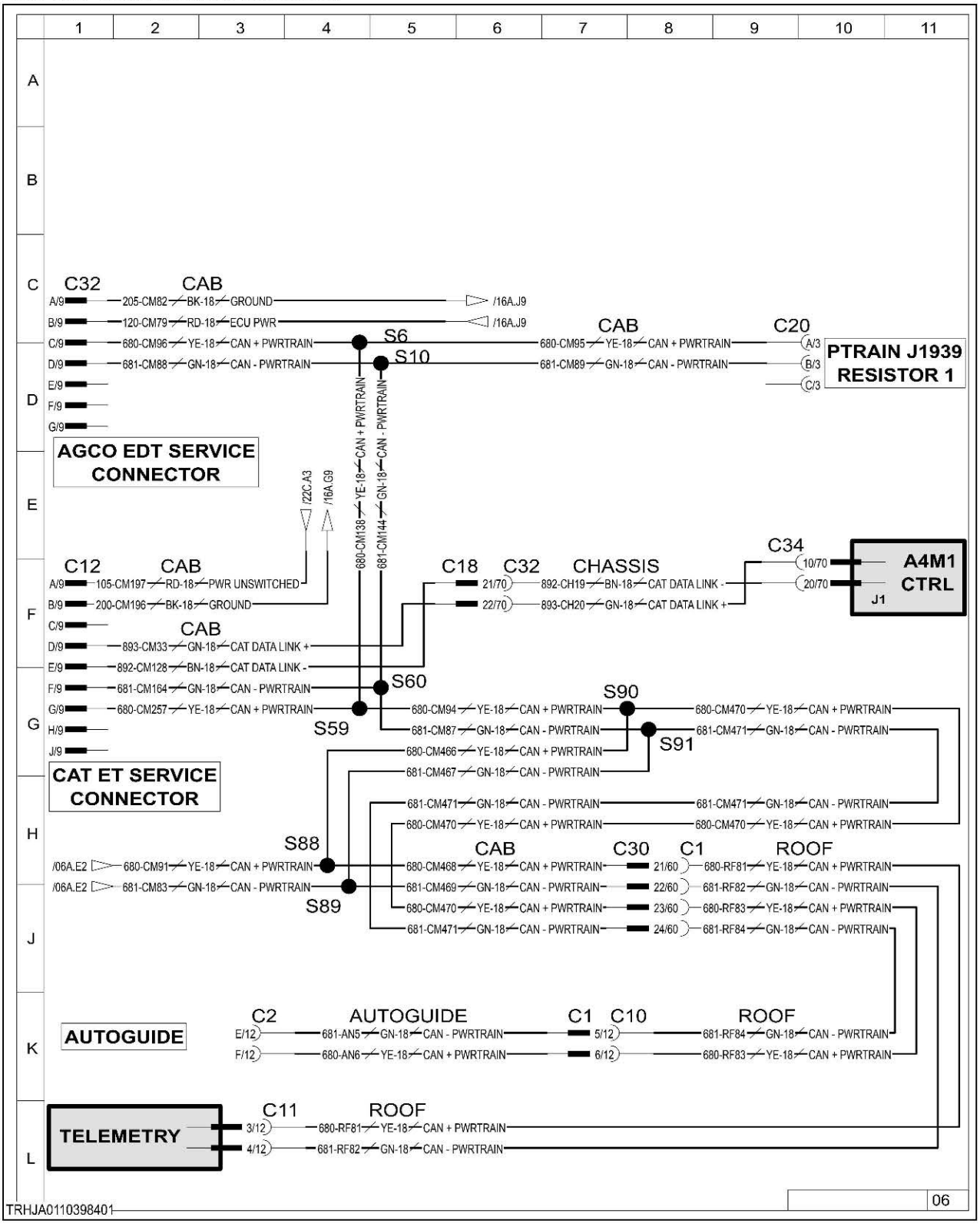

Fig. 145

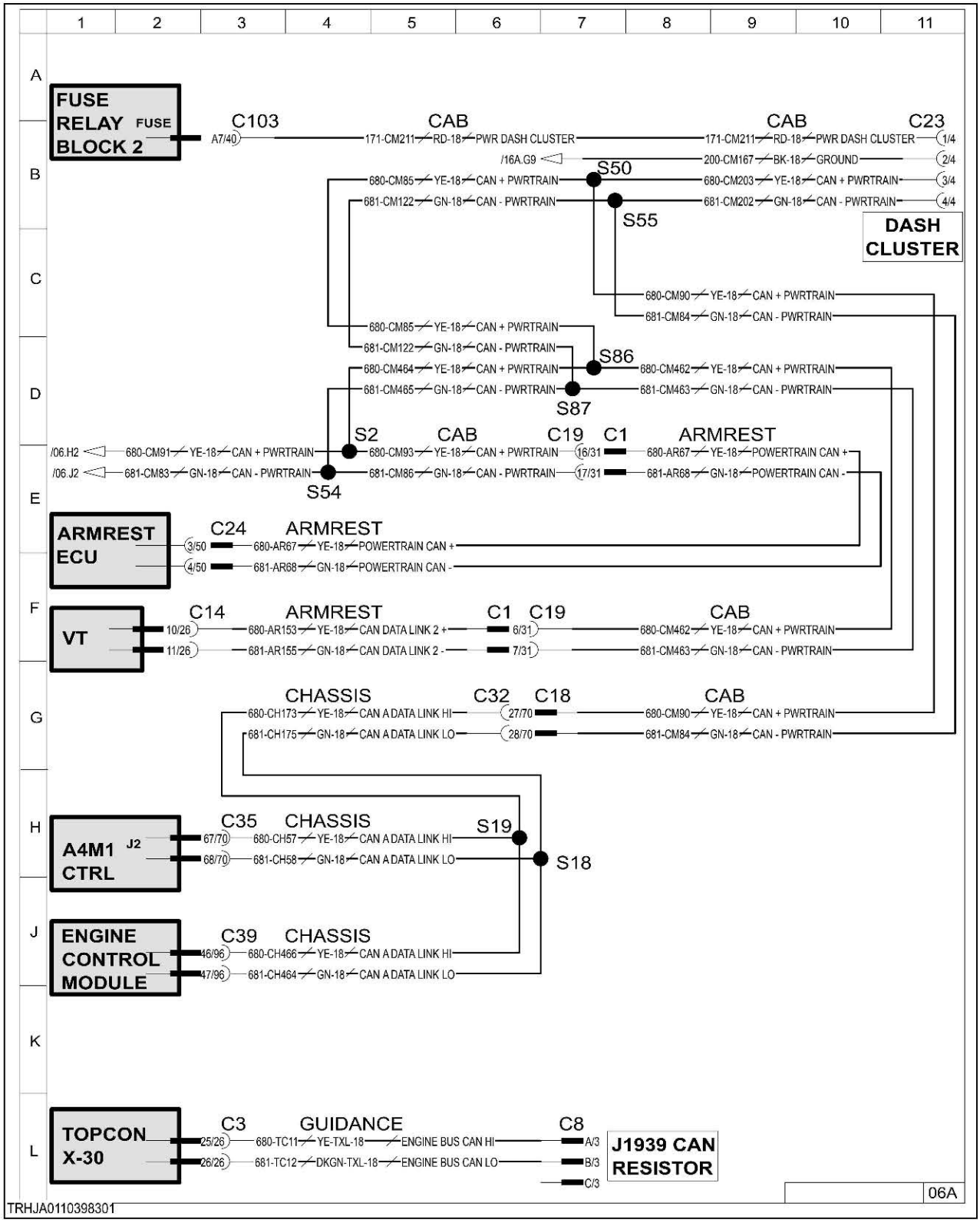
FUSE RELAY BLOCK 2
FUSE
C103
A7/40
CAB
171-CM211 RD-18 PWR DASH CLUSTER
CAB
171-CM211 RD-18 PWR DASH CLUSTER
C23
1/4
/16A.G9
200-CM167 BK-18 GROUND
2/4
S50
680-CM85 YE-18 CAN + PWRTRAIN
680-CM203 YE-18 CAN + PWRTRAIN
3/4
681-CM122 GN-18 CAN - PWRTRAIN
681-CM202 GN-18 CAN - PWRTRAIN
4/4
S55
DASH CLUSTER
680-CM90 YE-18 CAN + PWRTRAIN
681-CM84 GN-18 CAN - PWRTRAIN
680-CM85 YE-18 CAN + PWRTRAIN
681-CM122 GN-18 CAN - PWRTRAIN
S86
680-CM464 YE-18 CAN + PWRTRAIN
680-CM462 YE-18 CAN + PWRTRAIN
681-CM465 GN-18 CAN - PWRTRAIN
681-CM463 GN-18 CAN - PWRTRAIN
S87
S2
CAB
C19
C1
ARMREST
/06.H2
680-CM91 YE-18 CAN + PWRTRAIN
680-CM93 YE-18 CAN + PWRTRAIN
16/31
680-AR67 YE-18 POWERTRAIN CAN +
/06.J2
681-CM83 GN-18 CAN - PWRTRAIN
681-CM86 GN-18 CAN - PWRTRAIN
17/31
681-AR68 GN-18 POWERTRAIN CAN -
S54
ARMREST ECU
C24
ARMREST
3/50
680-AR67 YE-18 POWERTRAIN CAN +
4/50
681-AR68 GN-18 POWERTRAIN CAN -
VT
C14
ARMREST
C1
C19
CAB
10/26
680-AR153 YE-18 CAN DATA LINK 2 +
6/31
680-CM462 YE-18 CAN + PWRTRAIN
11/26
681-AR155 GN-18 CAN DATA LINK 2 -
7/31
681-CM463 GN-18 CAN - PWRTRAIN
CHASSIS
C32
C18
CAB
680-CH173 YE-18 CAN A DATA LINK HI
27/70
680-CM90 YE-18 CAN + PWRTRAIN
681-CH175 GN-18 CAN A DATA LINK LO
28/70
681-CM84 GN-18 CAN - PWRTRAIN
A4M1 CTRL
J2
C35
CHASSIS
S19
67/70
680-CH57 YE-18 CAN A DATA LINK HI
68/70
681-CH58 GN-18 CAN A DATA LINK LO
S18
ENGINE CONTROL MODULE
C39
CHASSIS
46/96
680-CH466 YE-18 CAN A DATA LINK HI
47/96
681-CH464 GN-18 CAN A DATA LINK LO
TOPCON X-30
C3
GUIDANCE
C8
25/26
680-TC11 YE-TXL-18 ENGINE BUS CAN HI
A/3
26/26
681-TC12 DKGN-TXL-18 ENGINE BUS CAN LO
B/3
C/3
J1939 CAN RESISTOR
06A
TRHJA0110398301

Fig. 146

10.6.19.2 Transmission input shaft speed sensor electrical schematic

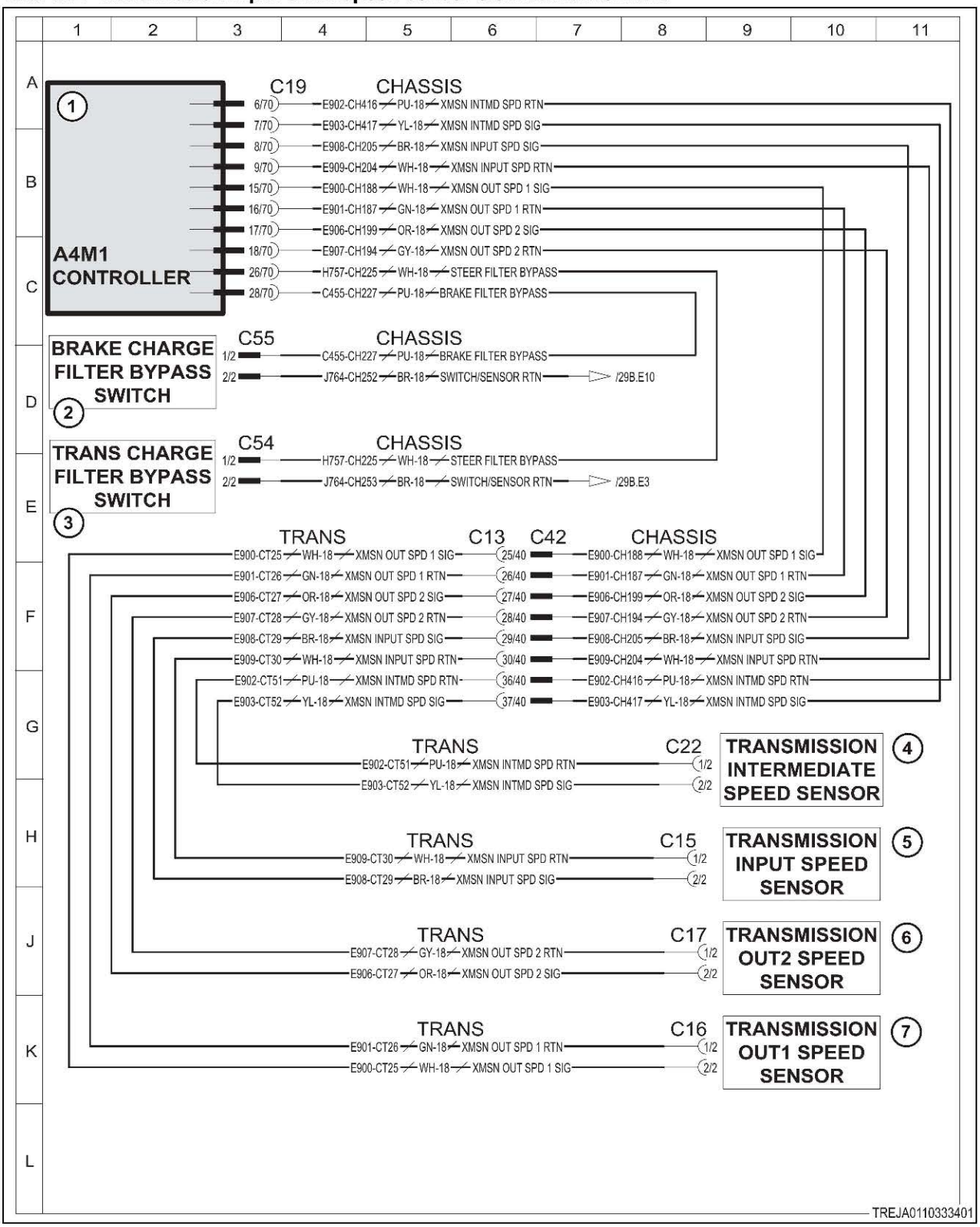

Fig. 147

Schematic legend		
Item	Schematic term	Description
1	A4M1 CONT	Transmission module
2	BRAKE CHARGE FILTER BYPASS SWITCH	Brake charge filter bypass switch
3	TRANS CHARGE FILTER BYPASS SWITCH	Transmission charge filter bypass switch
4	TRANSMISSION INTERMEDIATE SPEED SENSOR	Transmission intermediate speed sensor
5	TRANSMISSION INPUT SPEED SENSOR	Transmission input speed sensor
6	TRANSMISSION OUT 2 SPEED SENSOR	Transmission output speed sensor 2
7	TRANSMISSION OUT 1 SPEED SENSOR	Transmission output speed sensor 1
–	STEERING FILTER BYPASS	Steering filter bypass
–	BRAKE FILTER BYPASS	Brake filter bypass
–	SWITCH/SENSOR RTN	Switch/sensor return
–	XMSN OUT SPD SIG	Transmission output speed signal
–	XMSN OUT SPD RTN	Transmission output speed return
–	XMSN INPUT SPD RTN	Transmission input speed return
–	XMSN INPUT SPD SIG	Transmission input speed signal

10.6.20 Code SA 03 SPN 590 FMI 12

Communication from the engine module is interrupted or not correct.

Diagnosis and solution

1. Make sure the firmware for both the transmission module and engine module is up to date.
2. Inspect and clean the J2 harness connector at the transmission module.
3. Inspect and clean the machine harness connector at the engine module.
4. Check the CAN Bus resistance.
   a) Turn the key start switch to the off position.
   b) Turn the battery disconnect switch to the off position.
   c) Leave the engine module harness connected to the engine module.
   d) Disconnect the J2 connector from the transmission module.
   e) Check the resistance between contacts 67 and 68 of the J2 connector at the transmission harness connector.

   Result

   The CAN Bus resistance should be approximately 120 ohms.

   - The resistance is at or near 120 ohms.

     If no other system modules are reporting communication errors, the engine module is likely faulty.

     Troubleshoot or replace the engine module.
   - The resistance is above 120 ohms.

     The harness is open circuited or has corroded connections.

     Repair or replace the harness.

- The resistance is at or near 0 ohms.

  The harness is short circuited.

  Repair or replace the harness.

5. Check if the diagnostic code remains.

a) Check the contacts of the connectors and clean the contacts.
b) Connect all the connectors.
c) Turn the battery disconnect switch to the on position.
d) Turn the key start switch to the on position.
e) Turn on the engine.
f) Operate the engine at high idle.
g) Check if the diagnostic code remains.

Result

Expected result - the diagnostic code is not active.

Results:

- Yes - SPN 590 FMI 12 is not active.

  Stop.
- No - SPN 590 FMI 12 is active.

  Failure of the transmission module is possible but not common. Exit the procedure and do the procedure again. If the diagnostic code remains active, replace the module.

  Stop.

10.6.20.1 CAN electrical schematic

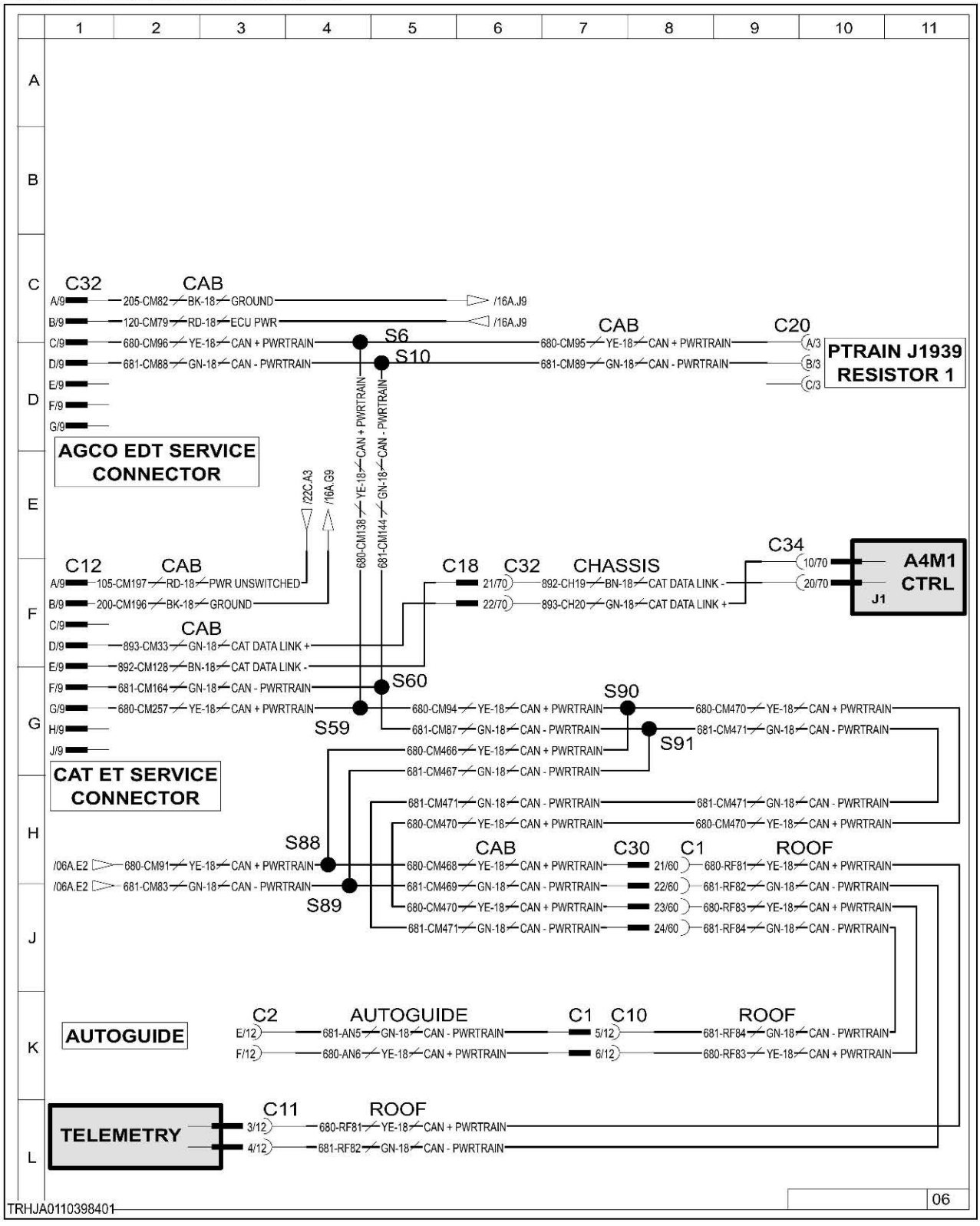

Fig. 148

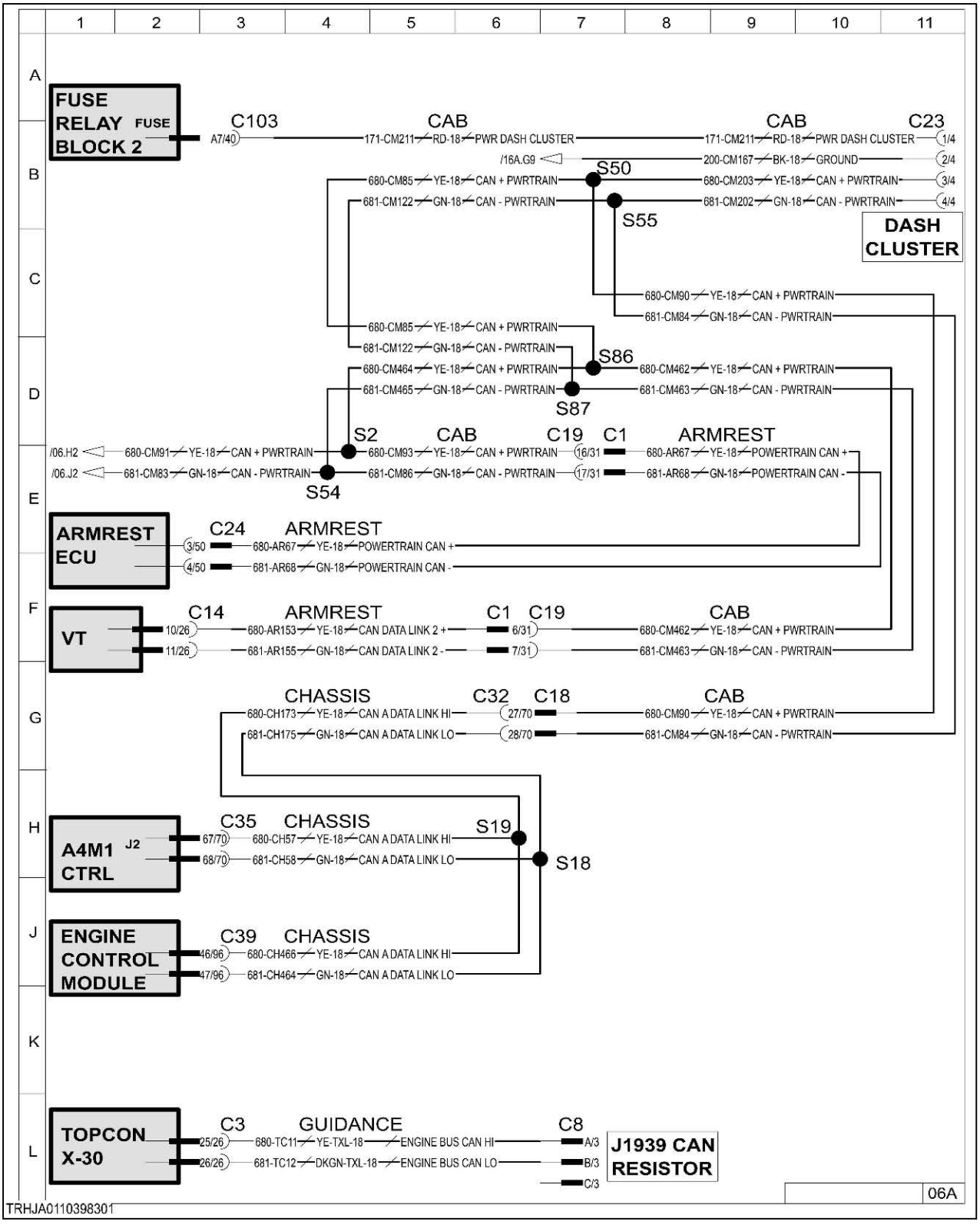
FUSE RELAY BLOCK 2
FUSE
C103
A7/40
CAB
171-CM211 RD-18 PWR DASH CLUSTER
CAB
C23
171-CM211 RD-18 PWR DASH CLUSTER 1/4
/16A.G9
200-CM167 BK-18 GROUND 2/4
S50
680-CM85 YE-18 CAN + PWRTRAIN
680-CM203 YE-18 CAN + PWRTRAIN 3/4
681-CM122 GN-18 CAN - PWRTRAIN
681-CM202 GN-18 CAN - PWRTRAIN 4/4
S55
DASH CLUSTER
680-CM90 YE-18 CAN + PWRTRAIN
681-CM84 GN-18 CAN - PWRTRAIN
680-CM85 YE-18 CAN + PWRTRAIN
681-CM122 GN-18 CAN - PWRTRAIN
S86
680-CM464 YE-18 CAN + PWRTRAIN
680-CM462 YE-18 CAN + PWRTRAIN
681-CM465 GN-18 CAN - PWRTRAIN
681-CM463 GN-18 CAN - PWRTRAIN
S87
S2
CAB
C19
C1
ARMREST
/06.H2
680-CM91 YE-18 CAN + PWRTRAIN
680-CM93 YE-18 CAN + PWRTRAIN
16/31
680-AR67 YE-18 POWERTRAIN CAN +
/06.J2
681-CM83 GN-18 CAN - PWRTRAIN
681-CM86 GN-18 CAN - PWRTRAIN
17/31
681-AR68 GN-18 POWERTRAIN CAN -
S54
ARMREST ECU
C24
ARMREST
3/50
680-AR67 YE-18 POWERTRAIN CAN +
4/50
681-AR68 GN-18 POWERTRAIN CAN -
VT
C14
ARMREST
C1
C19
CAB
10/26
680-AR153 YE-18 CAN DATA LINK 2 +
6/31
680-CM462 YE-18 CAN + PWRTRAIN
11/26
681-AR155 GN-18 CAN DATA LINK 2 -
7/31
681-CM463 GN-18 CAN - PWRTRAIN
CHASSIS
C32
C18
CAB
680-CH173 YE-18 CAN A DATA LINK HI
27/70
680-CM90 YE-18 CAN + PWRTRAIN
681-CH175 GN-18 CAN A DATA LINK LO
28/70
681-CM84 GN-18 CAN - PWRTRAIN
A4M1 CTRL
J2
C35
CHASSIS
S19
67/70
680-CH57 YE-18 CAN A DATA LINK HI
68/70
681-CH58 GN-18 CAN A DATA LINK LO
S18
ENGINE CONTROL MODULE
C39
CHASSIS
46/96
680-CH466 YE-18 CAN A DATA LINK HI
47/96
681-CH464 GN-18 CAN A DATA LINK LO
TOPCON X-30
C3
GUIDANCE
C8
25/26
680-TC11 YE-TXL-18 ENGINE BUS CAN HI
A/3
26/26
681-TC12 DKGN-TXL-18 ENGINE BUS CAN LO
B/3
C/3
J1939 CAN RESISTOR
06A
TRHJA0110398301

Fig. 149

10.6.20.2 Transmission input shaft speed sensor electrical schematic

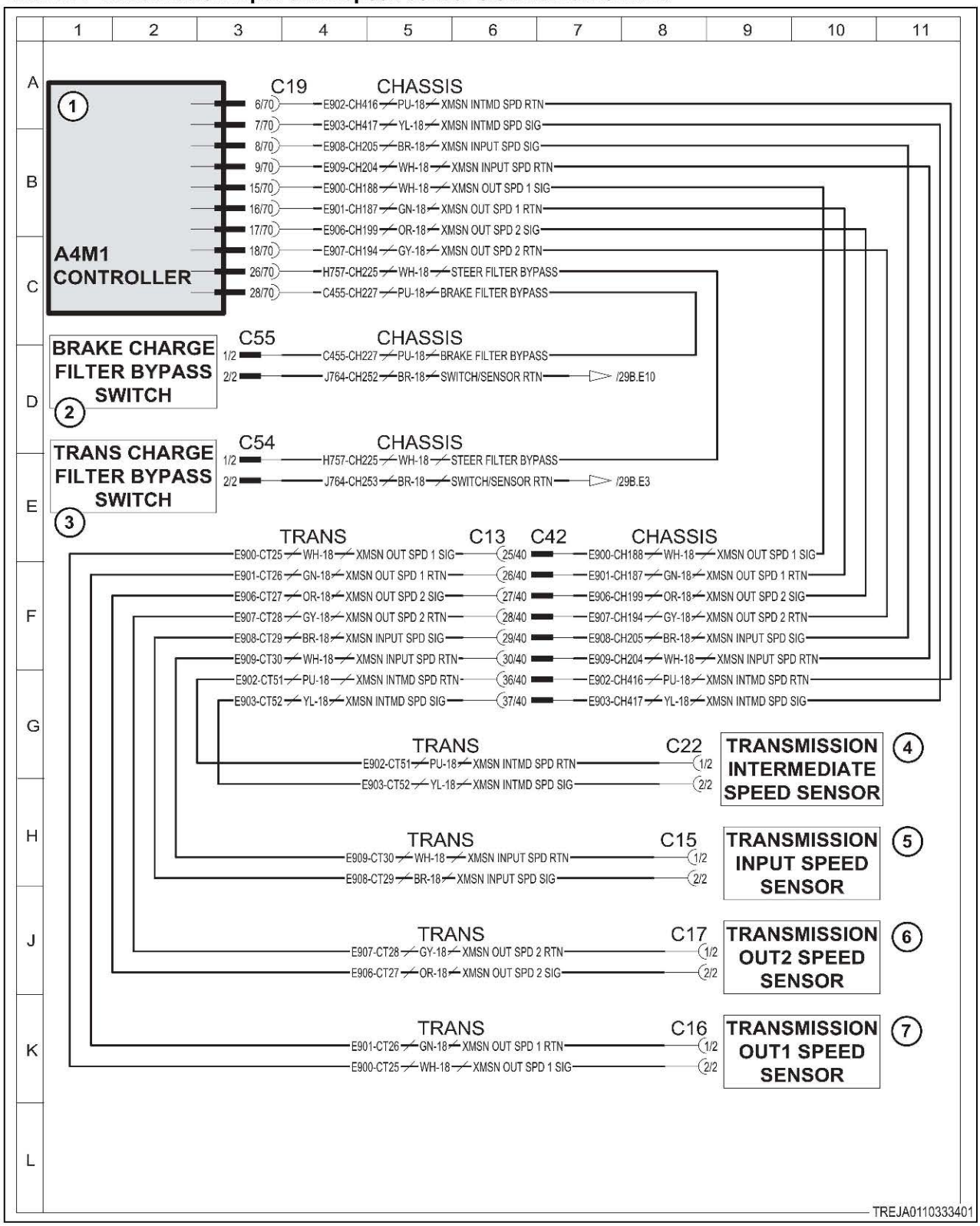

Fig. 150

Schematic legend		
Item	Schematic term	Description
1	A4M1 CONT	Transmission module
2	BRAKE CHARGE FILTER BYPASS SWITCH	Brake charge filter bypass switch
3	TRANS CHARGE FILTER BYPASS SWITCH	Transmission charge filter bypass switch
4	TRANSMISSION INTERMEDIATE SPEED SENSOR	Transmission intermediate speed sensor
5	TRANSMISSION INPUT SPEED SENSOR	Transmission input speed sensor
6	TRANSMISSION OUT 2 SPEED SENSOR	Transmission output speed sensor 2
7	TRANSMISSION OUT 1 SPEED SENSOR	Transmission output speed sensor 1
--	STEERING FILTER BYPASS	Steering filter bypass
--	BRAKE FILTER BYPASS	Brake filter bypass
--	SWITCH/SENSOR RTN	Switch/sensor return
--	XMSN OUT SPD SIG	Transmission output speed signal
--	XMSN OUT SPD RTN	Transmission output speed return
--	XMSN INPUT SPD RTN	Transmission input speed return
--	XMSN INPUT SPD SIG	Transmission input speed signal

10.6.21 Code SA 03 SPN 598 FMI 02

The module detects that the inching pedal switch signal is erratic intermittent or not correct.

The inching pedal switch is a single pole, double throw (SPDT) switch. Both the normally-open and normally-closed contacts are used to provide positive confirmation of the switch activation. This provides a redundancy check, in that as one contact closes, the other must open. The most likely cause is a faulty switch or a loose connection.

Diagnosis and solution

1. Observe the status of the error code under various conditions.

a) Turn the key start switch to the on position, but do not start the machine.

b) Operate the inching pedal from relaxed to fully depressed, and back.

Result

- The error code is set when the pedal is operated.

  Replace the inching pedal switch.

  See step 4 to validate the repair.
- The error code did not change (either set or cleared) when the pedal was operated.

  Continue.

c) Start the machine and operate at low idle, high idle, and in transport to create vibrations.

d) Operate the inching pedal from relaxed to fully depressed, and back.

Result

- The error code status appeared to be independent from machine vibration (always set or always cleared), but dependant on pedal operation.

  Replace the inching pedal switch.

  See step 4 to validate the repair.

- The error code appeared to be dependant on machine vibration.

  See step 2 to check switch operation.

2. Check switch operation.

a) Turn the key start switch to the off position.

b) Turn the battery disconnect switch to the off position.

c) Manually operate the switch plunger with your finger.

Result

You should feel the switch snap between open and closed sharply and crisply.

- The switch plunger feels loose and doesn't snap or click between positions.

  Replace the inching pedal switch.

  See step 4 to validate the repair.
- The switch plunger operates crisply.

  Continue.

d) Check the resistance between switch contacts, from COMM to NC and COMM to NO, while manually operating the switch plunger.

Result

As the switch is operated, one set of contacts should close, while the other will open.

- Both contacts are either open or closed at the same time.

  Replace the inching pedal switch.

  See step 4 to validate the repair.
- The contacts are toggling correctly.

  See step 3 to check the harness.

3. Inspect all harness and switch connections.

a) Inspect and clean all connectors and connector contacts:

- Look for bent or worn pins.
- Look for deformed or oversized sockets.
- Look for corrosion on the pins and sockets. Corrosion is a sign of a loose connection.
- Look for signs of overheating. Overheating is a sign of a poor connection, and can further loosen the pin or socket mount. The whole connector body should be replaced.

b) Make sure to inspect the following connector locations:

- Spade terminals at the switch.
- Cab harness to chassis harness connector (C18 & C32), contacts 35, 43, 44.
- Transmission module J1 connector contacts 21, 40, 41.

c) Repair or replace any connector or harness found faulty.

d) See step 4 to check if the code remains.

4. Check if the diagnostic code remains.

a) Check and clean the harness connector contacts.

b) Connect all the connectors.

c) Turn the battery disconnect switch to the on position.

d) Turn the key start switch to the on position.

e) Operate the machine at low idle.

f) Check if the diagnostic code remains.

Result

- SPN 598 FMI 02 is not active.

  Stop.
- SPN 598 FMI 02 is active.

  Failure of the transmission module is possible but not common. Exit the procedure and do the procedure again. If the diagnostic code remains active, replace the module.

  Stop.

10.6.21.1 Inching pedal switch

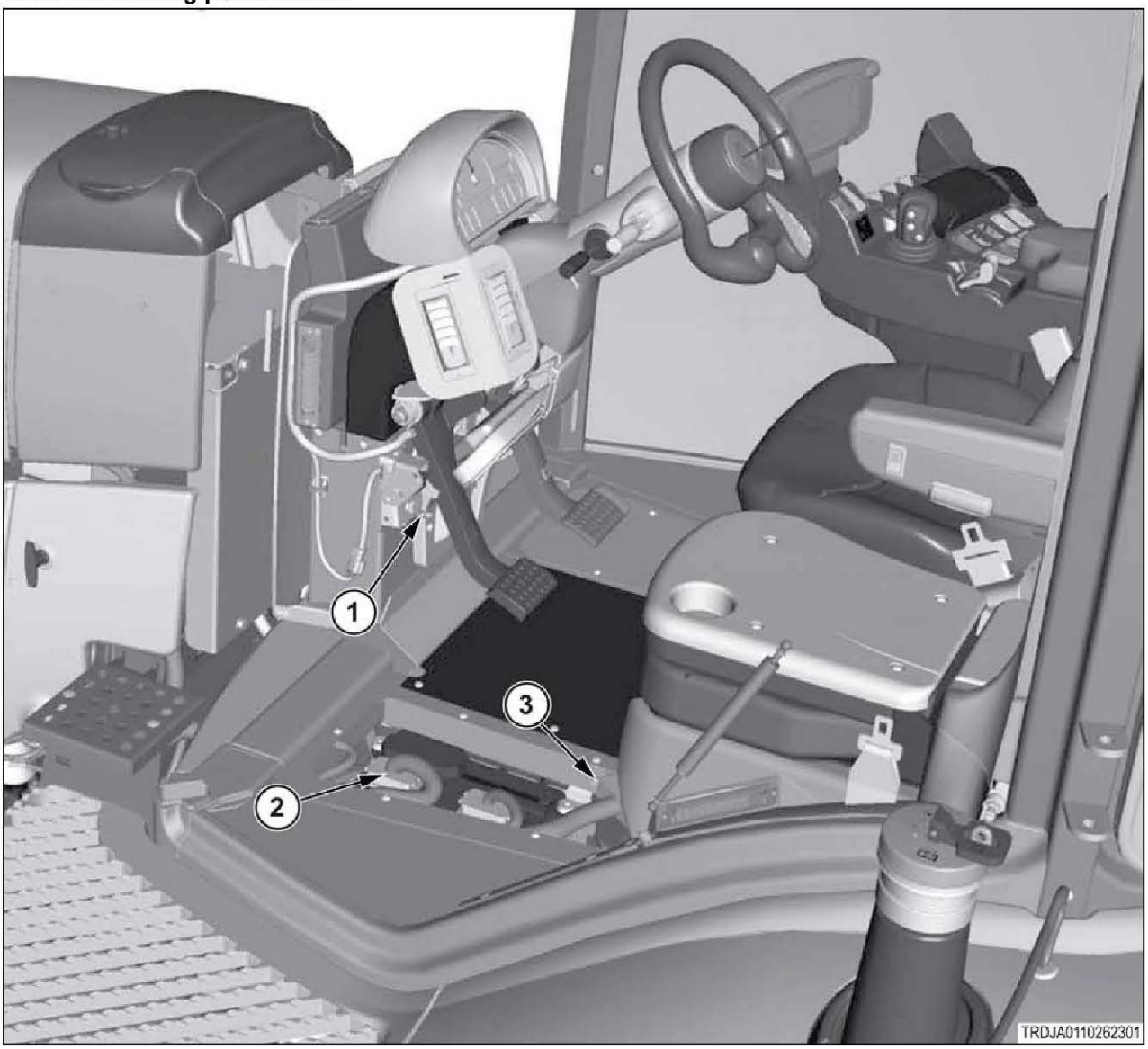

Fig. 151

(1)	Inching pedal switch
(2)	Transmission module
(3)	Chassis to transmission harness connectors

10.6.21.2 Inching pedal electrical schematic

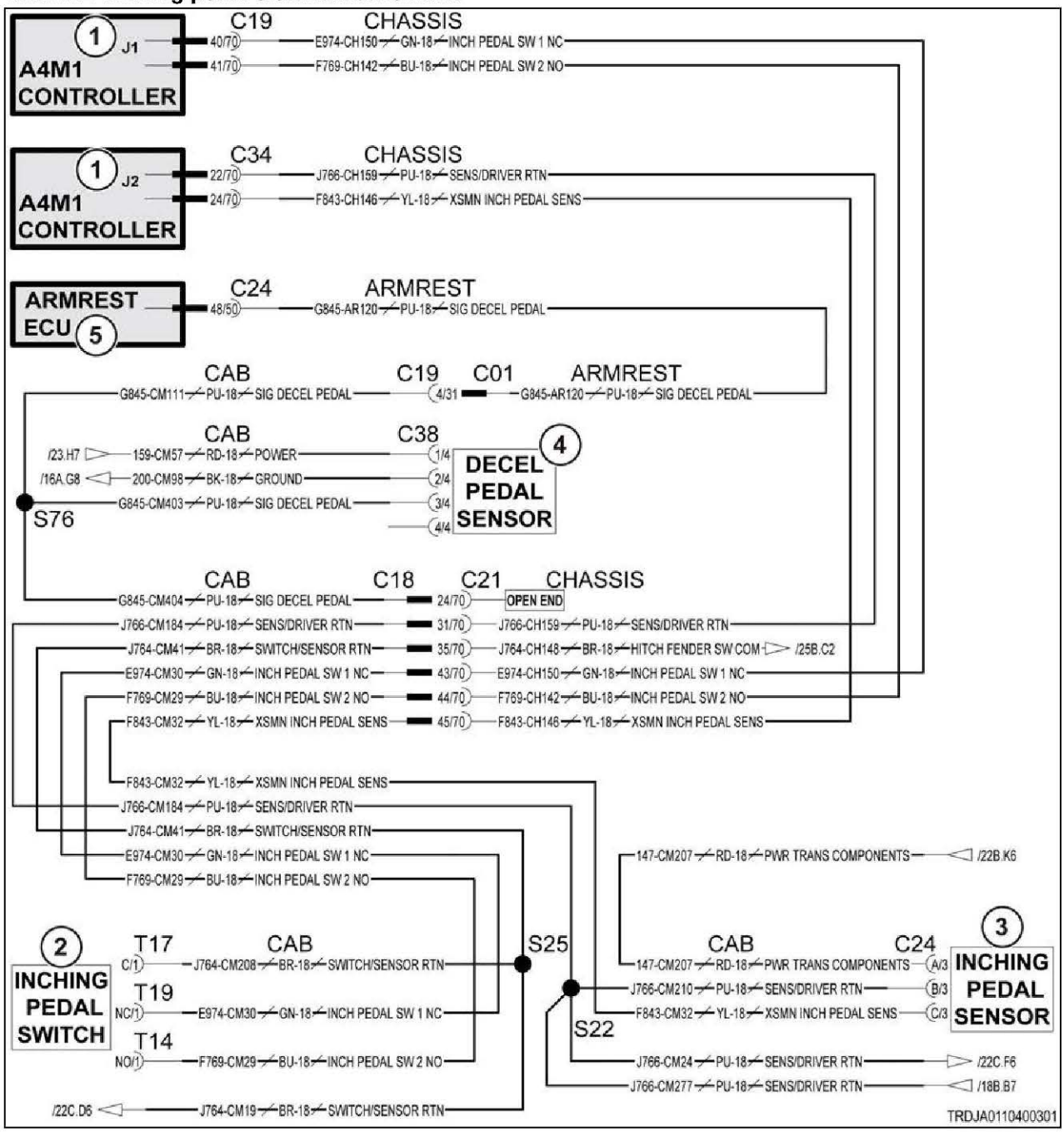

Fig. 152

Schematic legend		
Item	**Schematic term**	**Description**
1	A4M1 CONT	Transmission module
2	INCHING PEDAL SWITCH	Inching pedal switch
3	INCHING PEDAL SENSOR	Inching pedal sensor
4	DECEL PEDAL SENSOR	Decelerator pedal sensor
5	ARMREST ECU	Armrest module
--	XMSN INCH PEDAL SENS	Transmission inching pedal sensor

Schematic legend		
Item	Schematic term	Description
--	HITCH FENDER SW COM	Hitch fender switch common
--	SENS/DRIVER RTN	Sensor/driver return
--	INCH PEDAL SW 1 NC	Inching pedal switch 1 normally closed
--	INCH PEDAL SW 2 NO	Inching pedal switch 2 normally open
--	SIG DECEL PEDAL	Signal deceleration pedal
--	SWITCH/SENSOR RTN	Switch/sensor return
--	PWR TRANS COMPONENTS	Power transmission components

10.6.22 Code SA 03 SPN 598 FMI 07

The module detects that the inching pedal switch and the inching pedal sensor input readings are different.

The inching pedal signals are not valid. The most likely case is both signals are closed or both signals are open.

The inching pedal switch is a single pole, double throw (SPDT) switch. Both the normally-open and normally-closed contacts are used to provide positive confirmation of the switch activation. This provides a redundancy check, in that as one contact closes, the other must open.

Diagnosis and solution

1. Check the switch operation.

a) Turn the key start switch to the off position.

b) Turn the battery disconnect switch to the off position.

c) Manually operate the switch plunger with your finger.

Result

You should feel the switch snap between open and closed sharply and crisply.

- The switch plunger feels loose and doesn't snap or click between positions.

  Replace the inching pedal switch.

  See step 4 to validate the repair.
- The switch plunger operates crisply.

  Continue.

d) Check the resistance between switch contacts, from COMM to NC and COMM to NO, while manually operating the switch plunger.

Result

As the switch is operated, one set of contacts should close, while the other will open.

- Both contacts are either open or closed at the same time.

  Replace the inching pedal switch.

  See step 4 to validate the repair.
- The contacts are toggling correctly.

  See step 2 to check the harness.

2. Check for open circuits in the harness.

a) Make sure the inching pedal switch is correctly connected to the harness.

b) Disconnect the J1 connector from the transmission module.

c) With the switch in the relaxed position, check the resistance between contacts J1-21 and J1-40 at the transmission module connector.

d) With the switch in the depressed position, check the resistance between contacts J1-21 and J1-41 at the transmission module connector.

Result

- Both measurements were at or near 0 ohms.

  See step 3 to check for short circuits.
- Both measurements were high (not near 0 ohms).

  The switch return (ground) wire is open.

  Repair or replace the harness.

  See step 4 to validate the repair.
- Either measurement was high (not near 0 ohms).

  That respective signal wire is open.

  Repair or replace the harness.

  See step 4 to validate the repair.

3. Check for short circuits in the harness.

a) Disconnect the inching pedal switch from the harness.
b) Disconnect the J1 connector from the transmission module.
c) Check the resistance between contacts J1-21 and J1-40, at the J1 connector.
d) Check the resistance between contacts J1-21 and J1-41, at the J1 connector.

Result

- One or both resistance measurements are at or near zero.

  The harness is shorted.

  Repair or replace the harness.

  See step 4 to validate the repair.
- Both measurements are high (not near 0 ohms).

  See step 4 to check if the error code remains

4. Check if the diagnostic code remains.

a) Check and clean the harness connector contacts.
b) Connect all the connectors.
c) Turn the battery disconnect switch to the on position.
d) Turn the key start switch to the on position.
e) Operate the machine at low idle.
f) Check if the diagnostic code remains.

Result

- SPN 598 FMI 04 is not active.

  Stop.
- SPN 598 FMI 04 is active.

  Failure of the transmission module is possible but not common. Exit the procedure and do the procedure again. If the diagnostic code remains active, replace the module.

  Stop.

10.6.22.1 Inching pedal switch

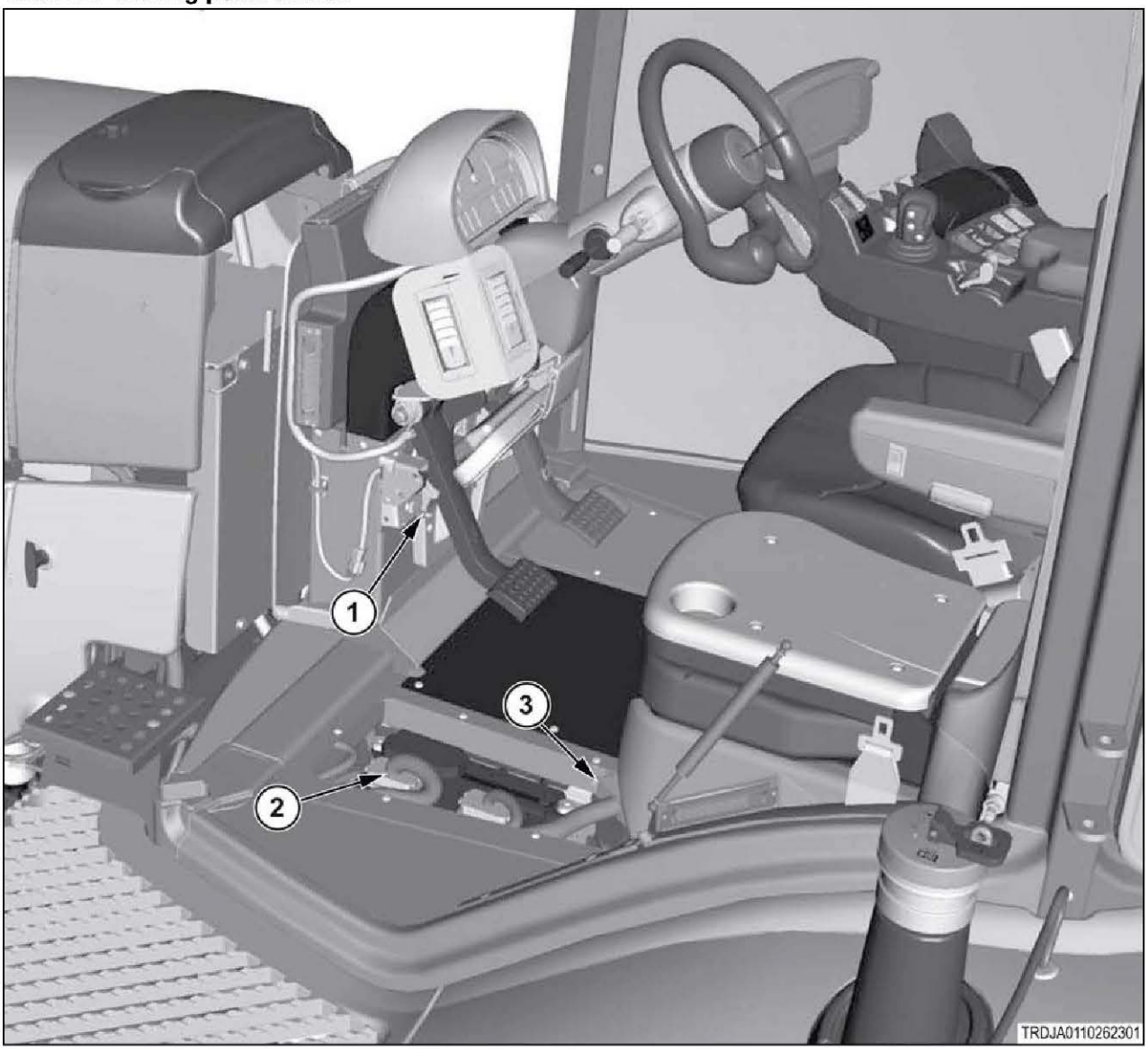

Fig. 153

(1)	Inching pedal switch
(2)	Transmission module
(3)	Chassis to transmission harness connectors

10.6.22.2 Inching pedal electrical schematic

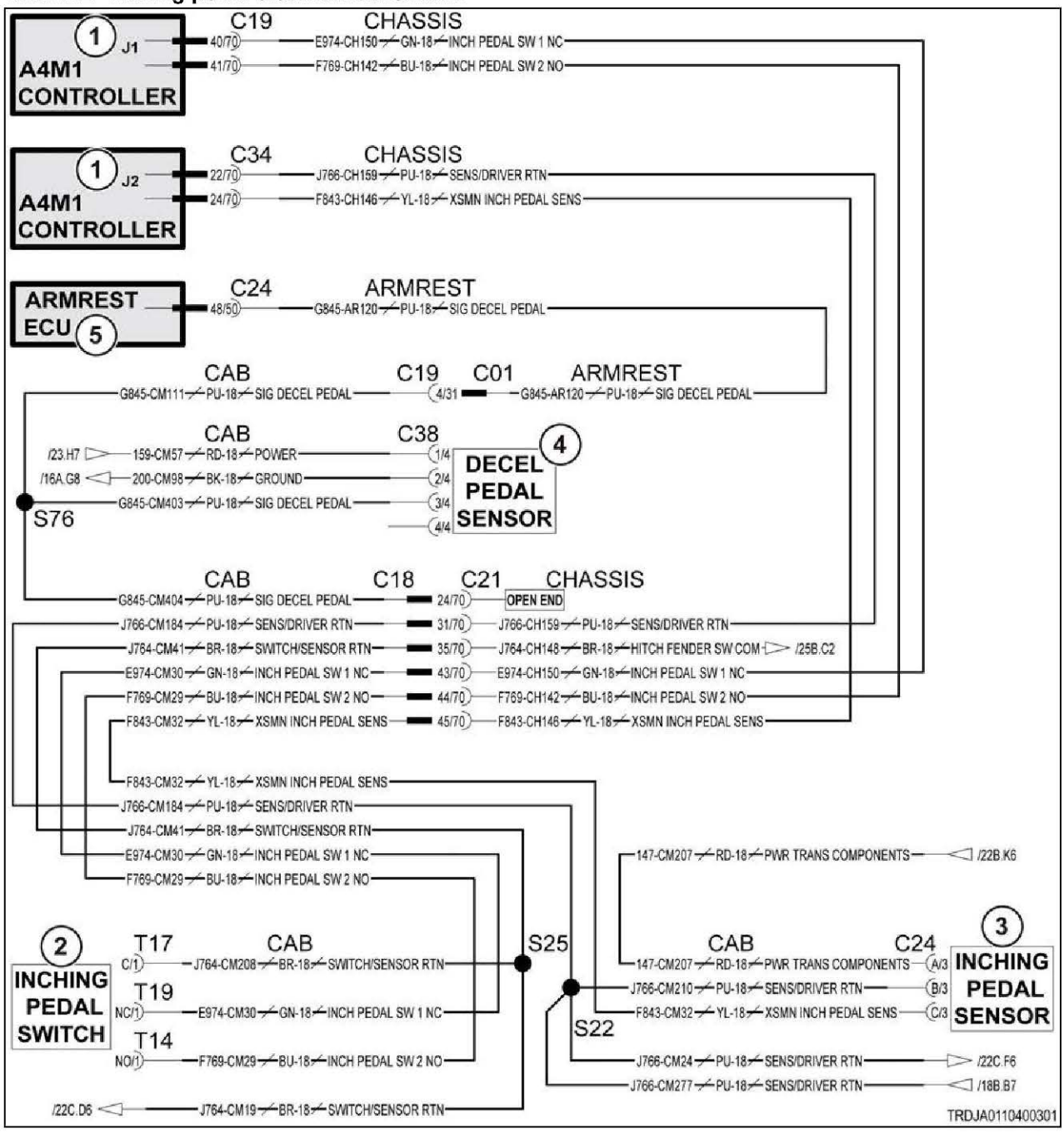

Fig. 154

Schematic legend		
Item	**Schematic term**	**Description**
1	A4M1 CONT	Transmission module
2	INCHING PEDAL SWITCH	Inching pedal switch
3	INCHING PEDAL SENSOR	Inching pedal sensor
4	DECEL PEDAL SENSOR	Decelerator pedal sensor
5	ARMREST ECU	Armrest module
--	XMSN INCH PEDAL SENS	Transmission inching pedal sensor

Schematic legend		
Item	Schematic term	Description
--	HITCH FENDER SW COM	Hitch fender switch common
--	SENS/DRIVER RTN	Sensor/driver return
--	INCH PEDAL SW 1 NC	Inching pedal switch 1 normally closed
--	INCH PEDAL SW 2 NO	Inching pedal switch 2 normally open
--	SIG DECEL PEDAL	Signal deceleration pedal
--	SWITCH/SENSOR RTN	Switch/sensor return
--	PWR TRANS COMPONENTS	Power transmission components

10.6.23 Code SA 03 SPN 598 FMI 14

The module detects that the signal for the inching pedal position sensor is not within expected range.

The inching pedal switch detects full depression of the inching pedal. The inching pedal position sensor detects the actual position of the pedal throughout its range of motion. The most likely cause for this error is the position sensor is out of calibration.

Diagnosis and solution

1. Perform the inching pedal calibration.
- a) Turn the key start switch to the on position.
- b) Wait for the armrest display to boot to the home screen.
- c) Slowly push in and release the inching pedal three to five times.
- d) If the calibration fails or the error persists, continue with step 2 to check the switch.

2. Check the switch operation.
- a) Turn the key start switch to the off position.
- b) Turn the battery disconnect switch to the off position.
- c) If the error is the result of recent work on the inching pedal, make sure the normally-open and normally-closed contact connections are not reversed.

  Result

  - The switch connections are reversed.

    Swap the connections.

    See step 3 to re-calibrate the position sensor.
  - The switch connections are correct.

    Continue.
- d) Manually operate the switch plunger with your finger.

  Result

  You should feel the switch snap between open and closed sharply and crisply.

  - The switch plunger feels loose and doesn't snap or click between positions.

    Replace the inching pedal switch.

    See step 3 to re-calibrate the sensor.
  - The switch plunger operates crisply.

    Continue.
- e) Check the resistance between switch contacts, from COMM to NC and COMM to NO, while manually operating the switch plunger.

Result

As the switch is operated, one set of contacts should close, while the other will open.

- Both contacts are either open or closed at the same time.

  Replace the inching pedal switch.

  See step 3 to re-calibrate the sensor.
- The contacts are toggling correctly.

  See step 3 to re-calibrate the sensor.

3. Re-calibrate the sensor and check if the diagnostic code remains.

a) Turn the key start switch to the on position.
b) Wait for the armrest display to boot to the home screen.
c) Slowly push in and release the inching pedal three to five times.
d) Check if the diagnostic code remains.

Result

- SPN 598 FMI 14 is not active.

  Stop.
- SPN 598 FMI 14 is active.

  Failure of the transmission module is possible but not common. Exit the procedure and do the procedure again. If the diagnostic code remains active, replace the module.

  Stop.

10.6.23.1 Inching pedal switch

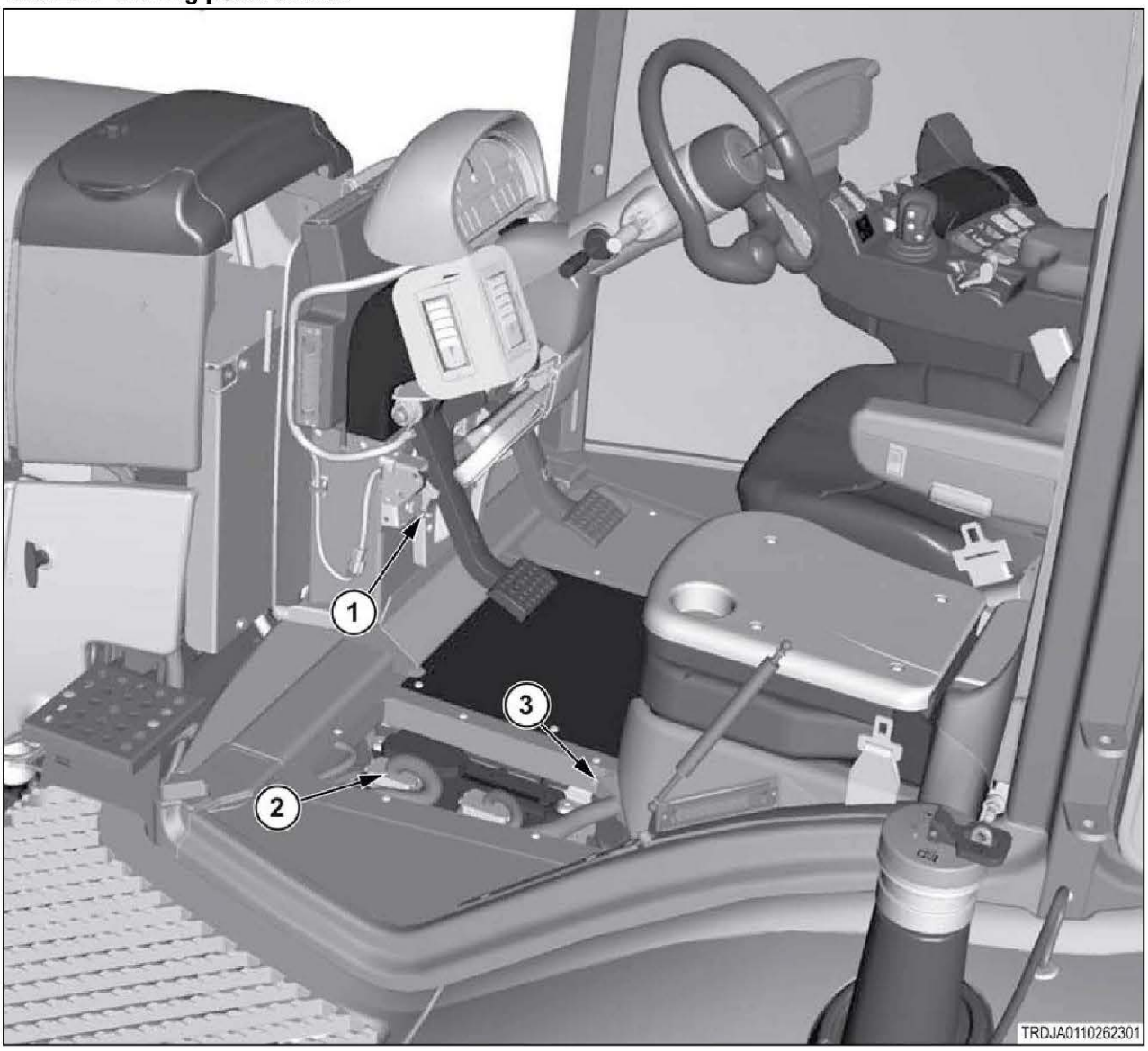

Fig. 155

(1)	Inching pedal switch
(2)	Transmission module
(3)	Chassis to transmission harness connectors

10.6.23.2 Inching pedal electrical schematic

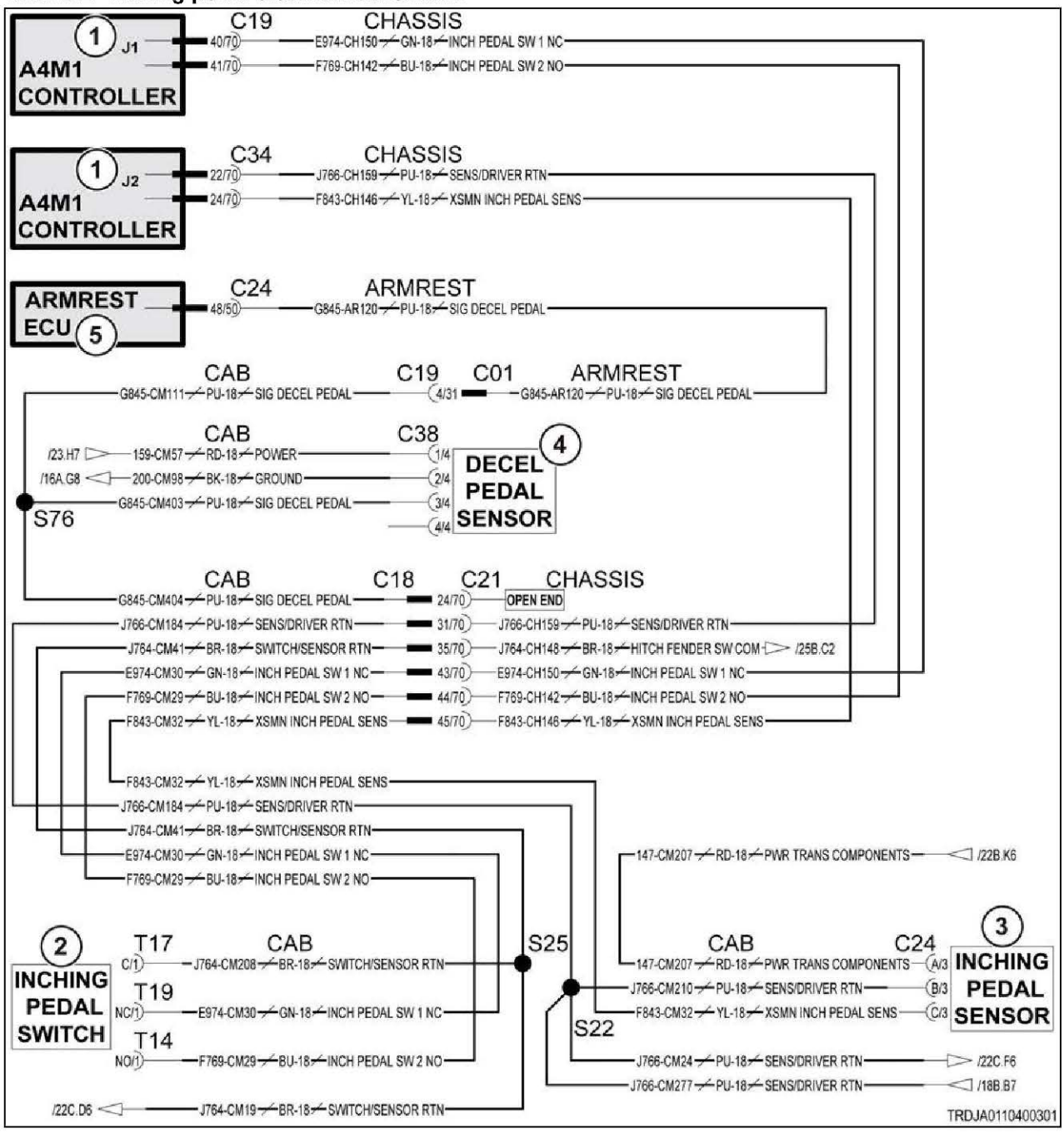

Fig. 156

Schematic legend		
Item	**Schematic term**	**Description**
1	A4M1 CONT	Transmission module
2	INCHING PEDAL SWITCH	Inching pedal switch
3	INCHING PEDAL SENSOR	Inching pedal sensor
4	DECEL PEDAL SENSOR	Decelerator pedal sensor
5	ARMREST ECU	Armrest module
--	XMSN INCH PEDAL SENS	Transmission inching pedal sensor

Schematic legend		
Item	Schematic term	Description
--	HITCH FENDER SW COM	Hitch fender switch common
--	SENS/DRIVER RTN	Sensor/driver return
--	INCH PEDAL SW 1 NC	Inching pedal switch 1 normally closed
--	INCH PEDAL SW 2 NO	Inching pedal switch 2 normally open
--	SIG DECEL PEDAL	Signal deceleration pedal
--	SWITCH/SENSOR RTN	Switch/sensor return
--	PWR TRANS COMPONENTS	Power transmission components

10.6.24 Code SA 03 SPN 617 FMI 03

The module detects that the voltage for the parking brake solenoid 2 circuit is above normal.

The transmission module has detected power in the solenoid circuit when the solenoid was not commanded to be active. The most likely cause is a short to power.

Diagnosis and solution

1. Check the harness for a short-circuit to the positive power.
a) Turn the key start switch to the off position.
b) Turn the battery disconnect switch to the off position.
c) Disconnect the harness connector from the park brake solenoid.
d) Disconnect the J2 connector from the transmission module.
e) Check resistance from contact J2-3 to all other J2 harness connector contacts.

Result

- All resistance measurements are high (not near 0 ohms).

  See step 2 to check if the error persists.
- One or more resistance measurement is at or near 0 ohms.

  Repair or replace the harness.

  See step 2 to validate the repair.

2. Check if the diagnostic code remains.
a) Check and clean the harness connector contacts.
b) Connect all the connectors.
c) Turn the battery disconnect switch to the on position.
d) Turn the key start switch to the on position.
e) Operate the machine at low idle.
f) Check if the diagnostic code remains.

Result

- SPN 617 FMI 03 is not active.

  Stop.
- SPN 617 FMI 03 is active.

  Failure of the transmission module is possible but not common. Exit the procedure and do the procedure again. If the diagnostic code remains active, replace the module.

  Stop.

10.6.24.1 Brake accumulator electrical schematic

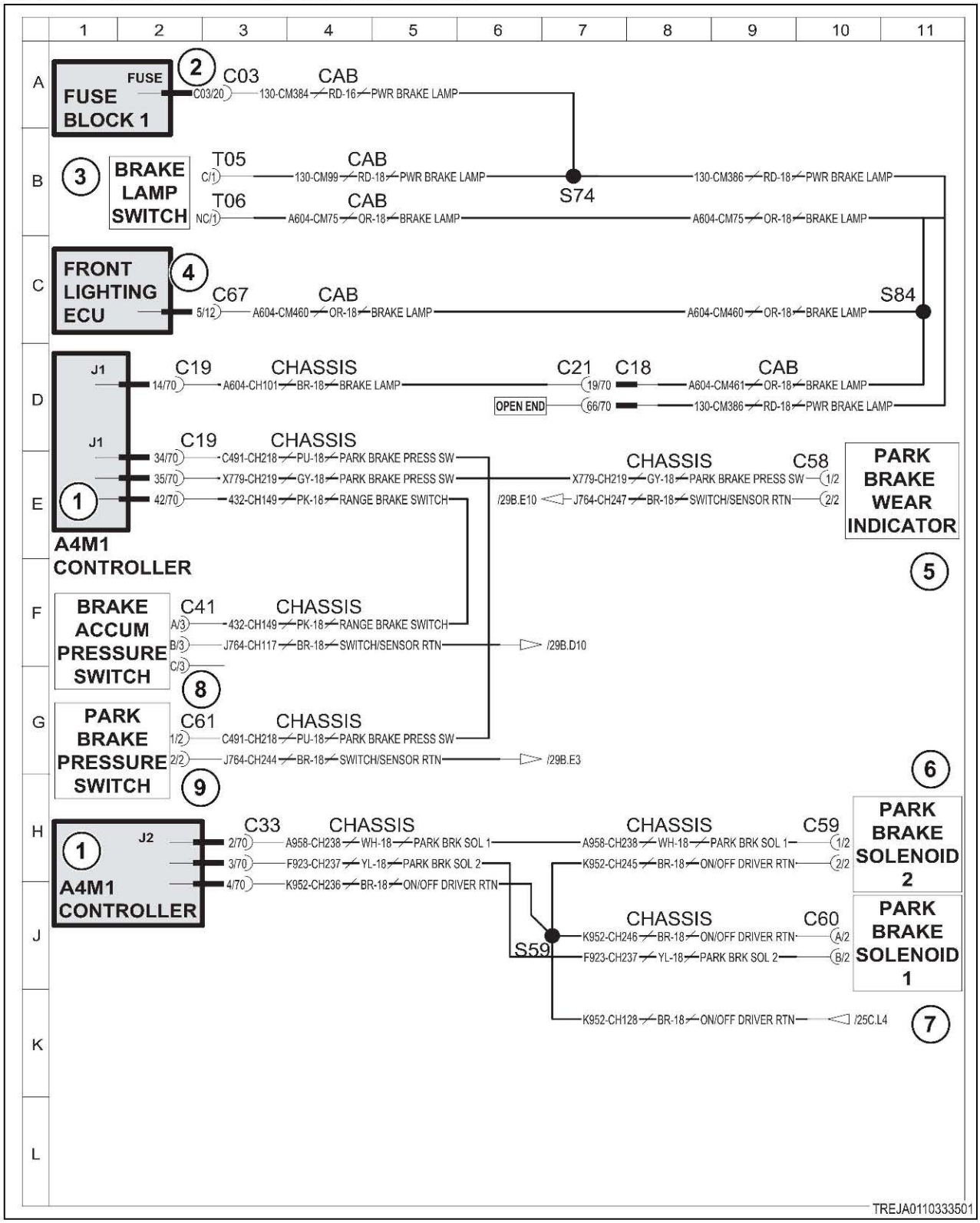

Fig. 157

Schematic legend		
Item	**Schematic term**	**Description**
1	A4M1 CONT	Transmission module
2	FUSE BLOCK 1	Fuse block 1
3	BRAKE LAMP SWITCH	Brake lamp switch
4	FRONT LIGHTING ECU	Front lighting module
5	PARK BRAKE WEAR INDICATOR	Park brake wear indicator
6	PARK BRK SOL 2	Park brake solenoid 2
7	PARK BRK SOL 1	Park brake solenoid 1
8	BRAKE ACCUM PRESSURE SWITCH	Brake accumulator pressure switch
9	PARK BRAKE PRESSURE SWITCH	Park brake pressure switch
--	SWITCH/SENSOR RTN	Switch/sensor return
--	PARK BRAKE PRESS SW	Park brake pressure switch
--	PWR BRAKE LAMP	Power brake lamp
--	ON/OFF DRIVER RTN	On/off driver return
--	PWR BRAKE LAMP	Power brake lamp

10.6.25 Code SA 03 SPN 617 FMI 05

The signal for the parking brake solenoid 2 is below normal.

The transmission module has detected an open circuit in the solenoid circuit. The most likely cause is a disconnected or faulty solenoid.

Diagnosis and solution

1. Inspect the solenoid and connector.

a) Turn the key start switch to the off position.
b) Turn the battery disconnect switch to the off position.
c) Disconnect the park brake solenoid connector.
d) Inspect and clean the contacts.
e) Check the resistance between contacts 1 and 2 of the solenoid.

Result

- The resistance is at or near 9.75 ohms.

  The solenoid is not at fault.

  See step 2 to check the harness.
- The resistance is above 9.75 ohms.

  Replace the solenoid.

  See step 3 to validate the repair.

2. Check the harness for open circuit.

a) Install a shorting jumper between contacts 1 and 2 of the solenoid connector.
b) Disconnect the J2 harness connector at the transmission module.
c) Inspect and clean the connector contacts.
d) Check the resistance between contacts J2-3 and J2-4 of the transmission module connector.

Result

- The resistance is at or near 0 ohms.

  Remove the shorting jumper and reconnect the sensor.

  See step 3 to check if the code remains.
- The resistance is high (not near 0 ohms).

  Repair or replace the harness.

  See step 3 to validate the repair.

3. Check if the diagnostic code remains.

a) Connect all the connectors.
b) Turn the battery disconnect switch to the on position.
c) Turn the key start switch to the on position.
d) Operate the machine at low idle.
e) Check if the diagnostic code remains.

Result

- SPN 617 FMI 05 is not active.

  Stop.
- SPN 617 FMI 05 is active.

  Failure of the transmission module is possible but not common. Exit the procedure and do the procedure again. If the diagnostic code remains active, replace the module.

  Stop.

10.6.25.1 Brake accumulator electrical schematic

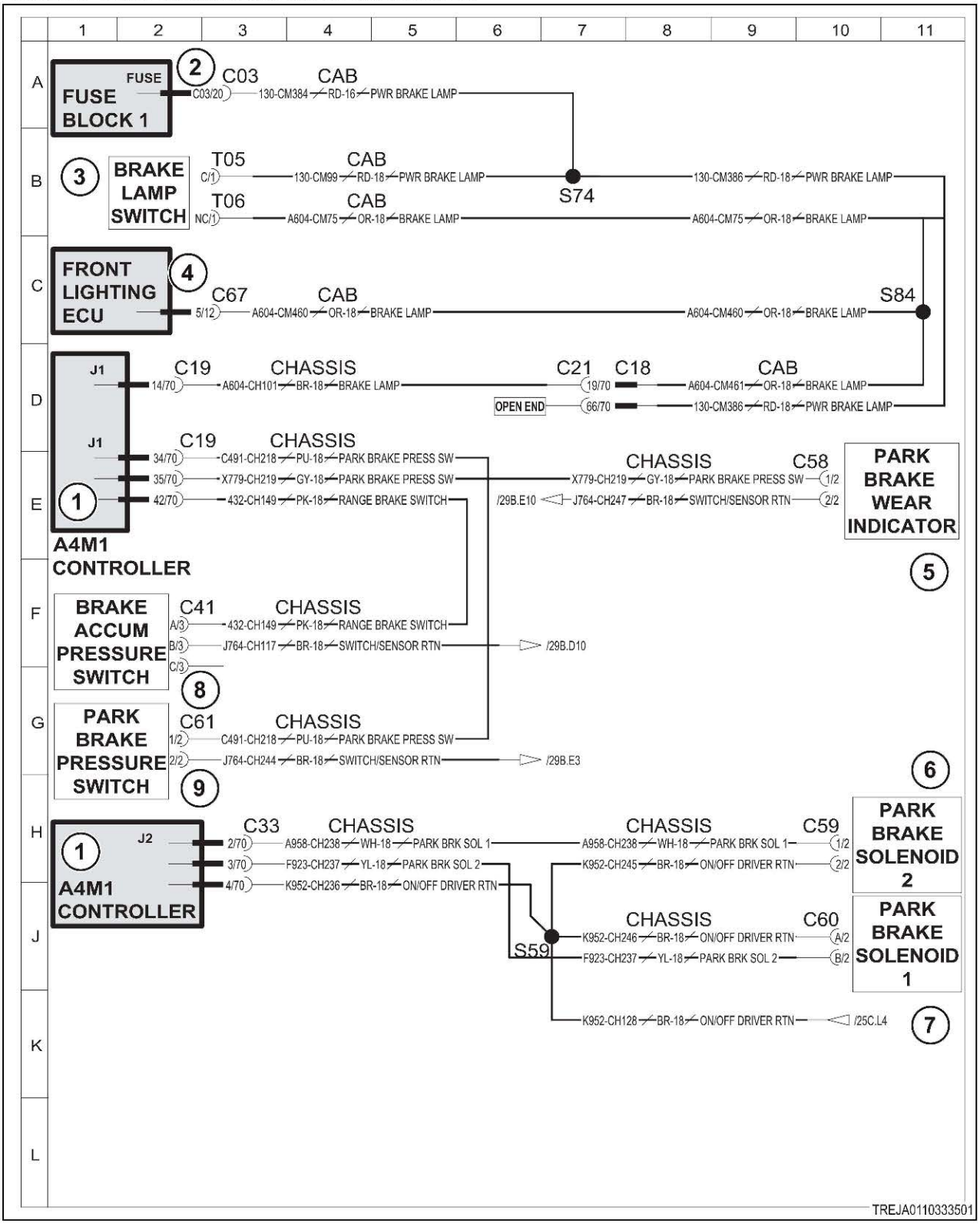

Fig. 158

Schematic legend		
Item	Schematic term	Description
1	A4M1 CONT	Transmission module
2	FUSE BLOCK 1	Fuse block 1
3	BRAKE LAMP SWITCH	Brake lamp switch
4	FRONT LIGHTING ECU	Front lighting module
5	PARK BRAKE WEAR INDICATOR	Park brake wear indicator
6	PARK BRK SOL 2	Park brake solenoid 2
7	PARK BRK SOL 1	Park brake solenoid 1
8	BRAKE ACCUM PRESSURE SWITCH	Brake accumulator pressure switch
9	PARK BRAKE PRESSURE SWITCH	Park brake pressure switch
--	SWITCH/SENSOR RTN	Switch/sensor return
--	PARK BRAKE PRESS SW	Park brake pressure switch
--	PWR BRAKE LAMP	Power brake lamp
--	ON/OFF DRIVER RTN	On/off driver return
--	PWR BRAKE LAMP	Power brake lamp

10.6.26 Code SA 03 SPN 617 FMI 06

The module detects that the current of the parking brake solenoid 2 circuit is above normal.

The transmission module has detected excessive current in the solenoid circuit The most likely cause is a faulty solenoid or short circuit.

Diagnosis and solution

1. Check the solenoid for short circuit.
- a) Turn the key start switch to the off position.
- b) Turn the battery disconnect switch to the off position.
- c) Disconnect the park brake solenoid connector.
- d) Check the resistance between contacts 1 and 2 of the solenoid.

Result

- The resistance is at or near 9.75 ohms.

  The solenoid is not at fault.

  See step 2 to check the harness.
- The resistance is at or near 0 ohms.

  Replace the solenoid.

  See step 3 to validate the repair.

2. Check the harness for short circuit.
- a) Make sure the solenoid is still disconnected from the previous step.
- b) Disconnect the J2 harness connector from the transmission module.
- c) Check resistance between contact J2-3 and all other J2 contacts.

Result

- All resistance measurements are high (more than 5000 ohms).

  See step 3 to check if the error remains.

- One or more resistance measurement is at or near 0 ohms.

  Repair or replace the harness.

  See step 3 to validate the repair.

3. Check if the diagnostic code remains.

a) Check and clean the harness connector contacts.
b) Connect all the connectors.
c) Turn the battery disconnect switch to the on position.
d) Turn the key start switch to the on position.
e) Operate the machine at low idle.
f) Check if the diagnostic code remains.

Result

- SPN 617 FMI 06 is not active.

  Stop.
- SPN 617 FMI 06 is active.

  Failure of the transmission module is possible but not common. Exit the procedure and do the procedure again. If the diagnostic code remains active, replace the module.

  Stop.

10.6.26.1 Brake accumulator electrical schematic

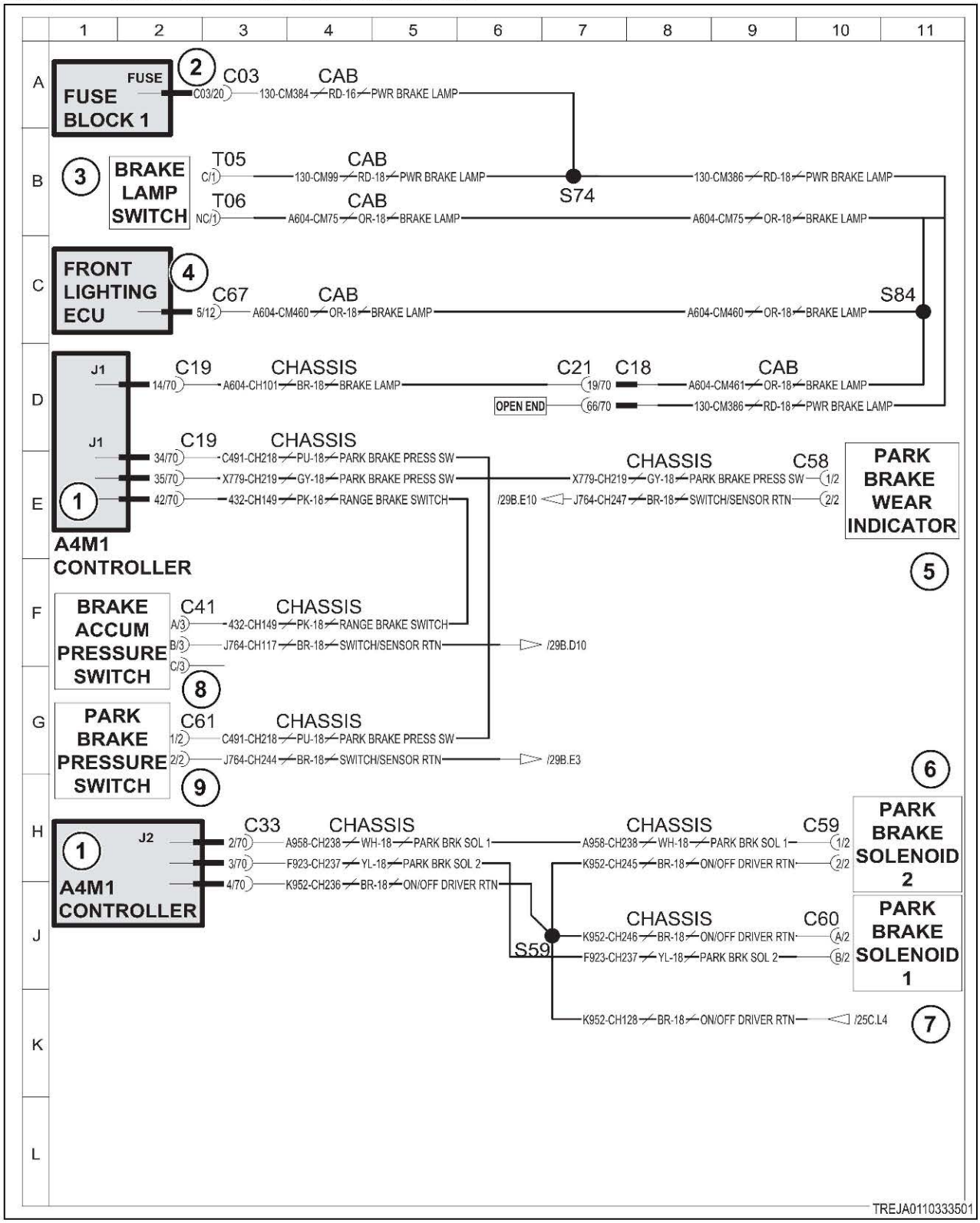

Fig. 159

Schematic legend		
Item	Schematic term	Description
1	A4M1 CONT	Transmission module
2	FUSE BLOCK 1	Fuse block 1
3	BRAKE LAMP SWITCH	Brake lamp switch
4	FRONT LIGHTING ECU	Front lighting module
5	PARK BRAKE WEAR INDICATOR	Park brake wear indicator
6	PARK BRK SOL 2	Park brake solenoid 2
7	PARK BRK SOL 1	Park brake solenoid 1
8	BRAKE ACCUM PRESSURE SWITCH	Brake accumulator pressure switch
9	PARK BRAKE PRESSURE SWITCH	Park brake pressure switch
--	SWITCH/SENSOR RTN	Switch/sensor return
--	PARK BRAKE PRESS SW	Park brake pressure switch
--	PWR BRAKE LAMP	Power brake lamp
--	ON/OFF DRIVER RTN	On/off driver return
--	PWR BRAKE LAMP	Power brake lamp

10.6.27 Code SA 03 SPN 618 FMI 03

The module detects that the voltage of the parking brake solenoid 1 circuit is above normal.

The transmission module has detected power in the solenoid circuit when the solenoid was not commanded to be active. The most likely cause is a short to power.

Diagnosis and solution

1. Check the harness for a short-circuit to the positive power.
- a) Turn the key start switch to the off position.
- b) Turn the battery disconnect switch to the off position.
- c) Disconnect the harness connector from the park brake solenoid.
- d) Disconnect the J2 connector from the transmission module.
- e) Check resistance from contact J2-2 to all other J2 harness connector contacts.

Result

- All resistance measurements are high (not near 0 ohms).

  See step 2 to check if the error persists.
- One or more resistance measurement is at or near 0 ohms.

  Repair or replace the harness.

  See step 2 to validate the repair.

2. Check if the diagnostic code remains.
- a) Check and clean the harness connector contacts.
- b) Connect all the connectors.
- c) Turn the battery disconnect switch to the on position.
- d) Turn the key start switch to the on position.
- e) Operate the machine at low idle.
- f) Check if the diagnostic code remains.

Result

- SPN 618 FMI 03 is not active.

  Stop.
- SPN 618 FMI 03 is active.

  Failure of the transmission module is possible but not common. Exit the procedure and do the procedure again. If the diagnostic code remains active, replace the module.

  Stop.

10.6.27.1 Brake accumulator electrical schematic

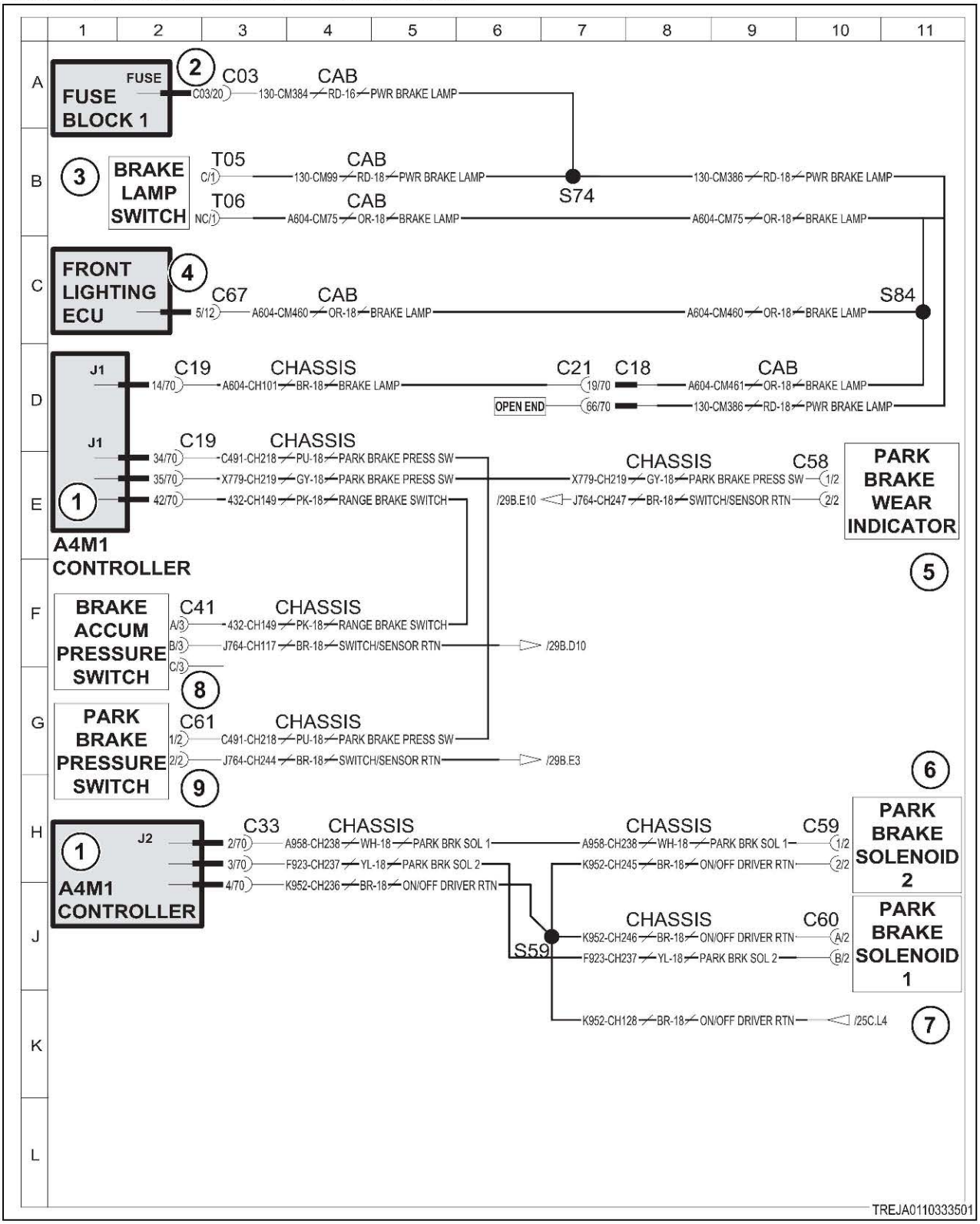

Fig. 160

Schematic legend		
Item	Schematic term	Description
1	A4M1 CONT	Transmission module
2	FUSE BLOCK 1	Fuse block 1
3	BRAKE LAMP SWITCH	Brake lamp switch
4	FRONT LIGHTING ECU	Front lighting module
5	PARK BRAKE WEAR INDICATOR	Park brake wear indicator
6	PARK BRK SOL 2	Park brake solenoid 2
7	PARK BRK SOL 1	Park brake solenoid 1
8	BRAKE ACCUM PRESSURE SWITCH	Brake accumulator pressure switch
9	PARK BRAKE PRESSURE SWITCH	Park brake pressure switch
--	SWITCH/SENSOR RTN	Switch/sensor return
--	PARK BRAKE PRESS SW	Park brake pressure switch
--	PWR BRAKE LAMP	Power brake lamp
--	ON/OFF DRIVER RTN	On/off driver return
--	PWR BRAKE LAMP	Power brake lamp

10.6.28 Code SA 03 SPN 618 FMI 05

The module detects that the current of the parking brake solenoid 1 is below normal.

The transmission module has detected an open circuit in the solenoid circuit. The most likely cause is a disconnected or faulty solenoid.

Diagnosis and solution

1. Inspect the solenoid and connector.

a) Turn the key start switch to the off position.
b) Turn the battery disconnect switch to the off position.
c) Disconnect the park brake solenoid connector.
d) Inspect and clean the contacts.
e) Check the resistance between contacts 1 and 2 of the solenoid.

Result

- The resistance is at or near 9.75 ohms.

  The solenoid is not at fault.

  See step 2 to check the harness.
- The resistance is above 9.75 ohms.

  Replace the solenoid.

  See step 3 to validate the repair.

2. Check the harness for open circuit.

a) Install a shorting jumper between contacts 1 and 2 of the solenoid connector.
b) Disconnect the J2 harness connector at the transmission module.
c) Inspect and clean the connector contacts.
d) Check the resistance between contacts J2-2 and J2-4 of the transmission module connector.

Result

- The resistance is at or near 0 ohms.

  Remove the shorting jumper and reconnect the sensor.

  See step 3 to check if the code remains.
- The resistance is high (not near 0 ohms).

  Repair or replace the harness.

  See step 3 to validate the repair.

3. Check if the diagnostic code remains.

a) Connect all the connectors.
b) Turn the battery disconnect switch to the on position.
c) Turn the key start switch to the on position.
d) Operate the machine at low idle.
e) Check if the diagnostic code remains.

Result

- SPN 618 FMI 05 is not active.

  Stop.
- SPN 618 FMI 05 is active.

  Failure of the transmission module is possible but not common. Exit the procedure and do the procedure again. If the diagnostic code remains active, replace the module.

  Stop.

10.6.28.1 Brake accumulator electrical schematic

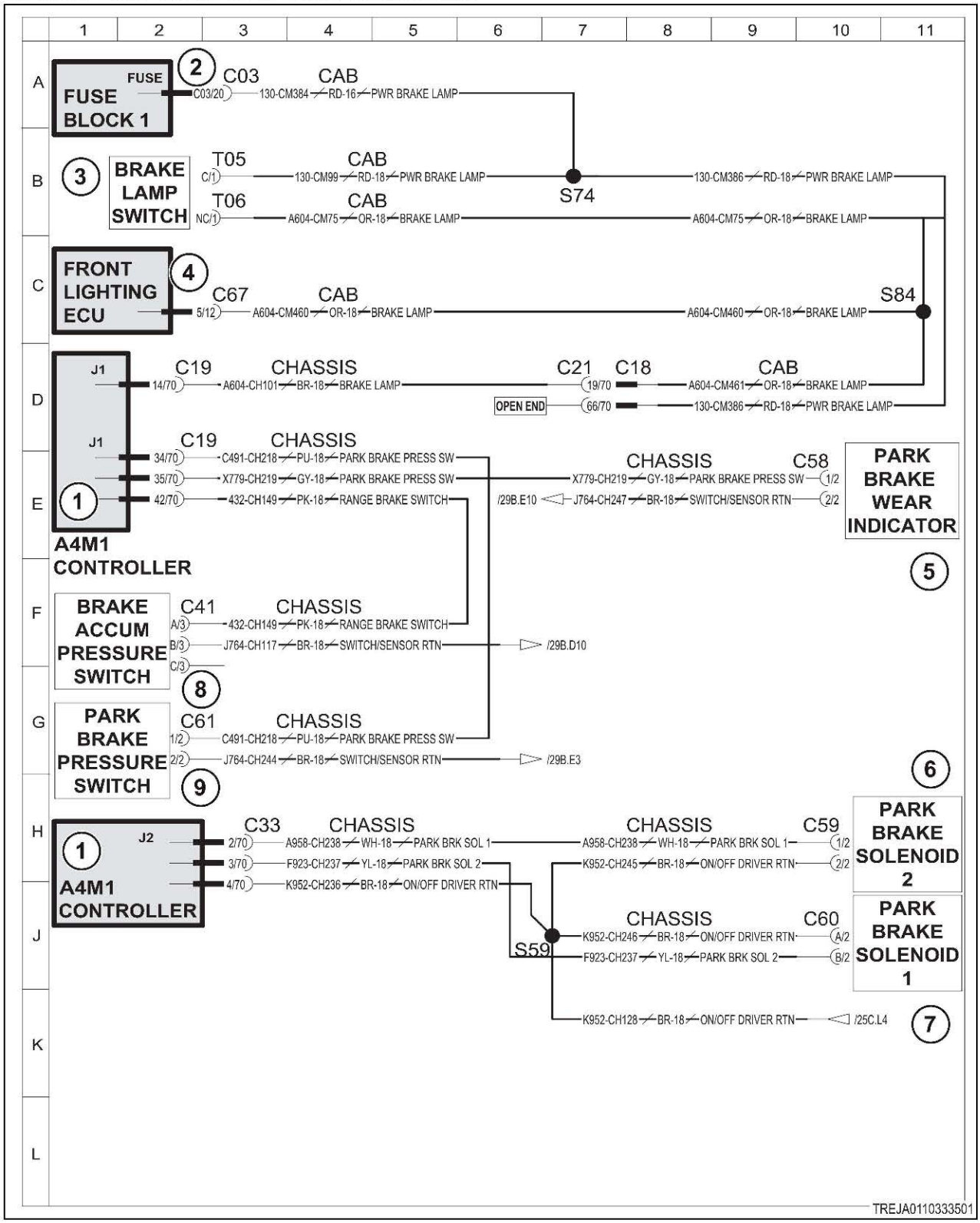

Fig. 161

Schematic legend		
Item	Schematic term	Description
1	A4M1 CONT	Transmission module
2	FUSE BLOCK 1	Fuse block 1
3	BRAKE LAMP SWITCH	Brake lamp switch
4	FRONT LIGHTING ECU	Front lighting module
5	PARK BRAKE WEAR INDICATOR	Park brake wear indicator
6	PARK BRK SOL 2	Park brake solenoid 2
7	PARK BRK SOL 1	Park brake solenoid 1
8	BRAKE ACCUM PRESSURE SWITCH	Brake accumulator pressure switch
9	PARK BRAKE PRESSURE SWITCH	Park brake pressure switch
--	SWITCH/SENSOR RTN	Switch/sensor return
--	PARK BRAKE PRESS SW	Park brake pressure switch
--	PWR BRAKE LAMP	Power brake lamp
--	ON/OFF DRIVER RTN	On/off driver return
--	PWR BRAKE LAMP	Power brake lamp

10.6.29 Code SA 03 SPN 618 FMI 06

The module detects that the current of the parking brake solenoid 1 is above normal.

The transmission module has detected excessive current in the solenoid circuit The most likely cause is a faulty solenoid or short circuit.

Diagnosis and solution

1. Check the solenoid for short circuit.

a) Turn the key start switch to the off position.
b) Turn the battery disconnect switch to the off position.
c) Disconnect the park brake solenoid connector.
d) Check the resistance between contacts 1 and 2 of the solenoid.

Result

- The resistance is at or near 9.75 ohms.

  The solenoid is not at fault.

  See step 2 to check the harness.
- The resistance is at or near 0 ohms.

  Replace the solenoid.

  See step 3 to validate the repair.

2. Check the harness for short circuit.

a) Make sure the solenoid is still disconnected from the previous step.
b) Disconnect the J2 harness connector from the transmission module.
c) Check resistance between contact J2-2 and all other J2 contacts.

Result

- All resistance measurements are high (more than 5000 ohms).

  See step 3 to check if the error remains.

- One or more resistance measurement is at or near 0 ohms.

  Repair or replace the harness.

  See step 3 to validate the repair.

3. Check if the diagnostic code remains.

a) Check and clean the harness connector contacts.
b) Connect all the connectors.
c) Turn the battery disconnect switch to the on position.
d) Turn the key start switch to the on position.
e) Operate the machine at low idle.
f) Check if the diagnostic code remains.

Result

- SPN 618 FMI 06 is not active.

  Stop.
- SPN 618 FMI 06 is active.

  Failure of the transmission module is possible but not common. Exit the procedure and do the procedure again. If the diagnostic code remains active, replace the module.

  Stop.

10.6.29.1 Brake accumulator electrical schematic

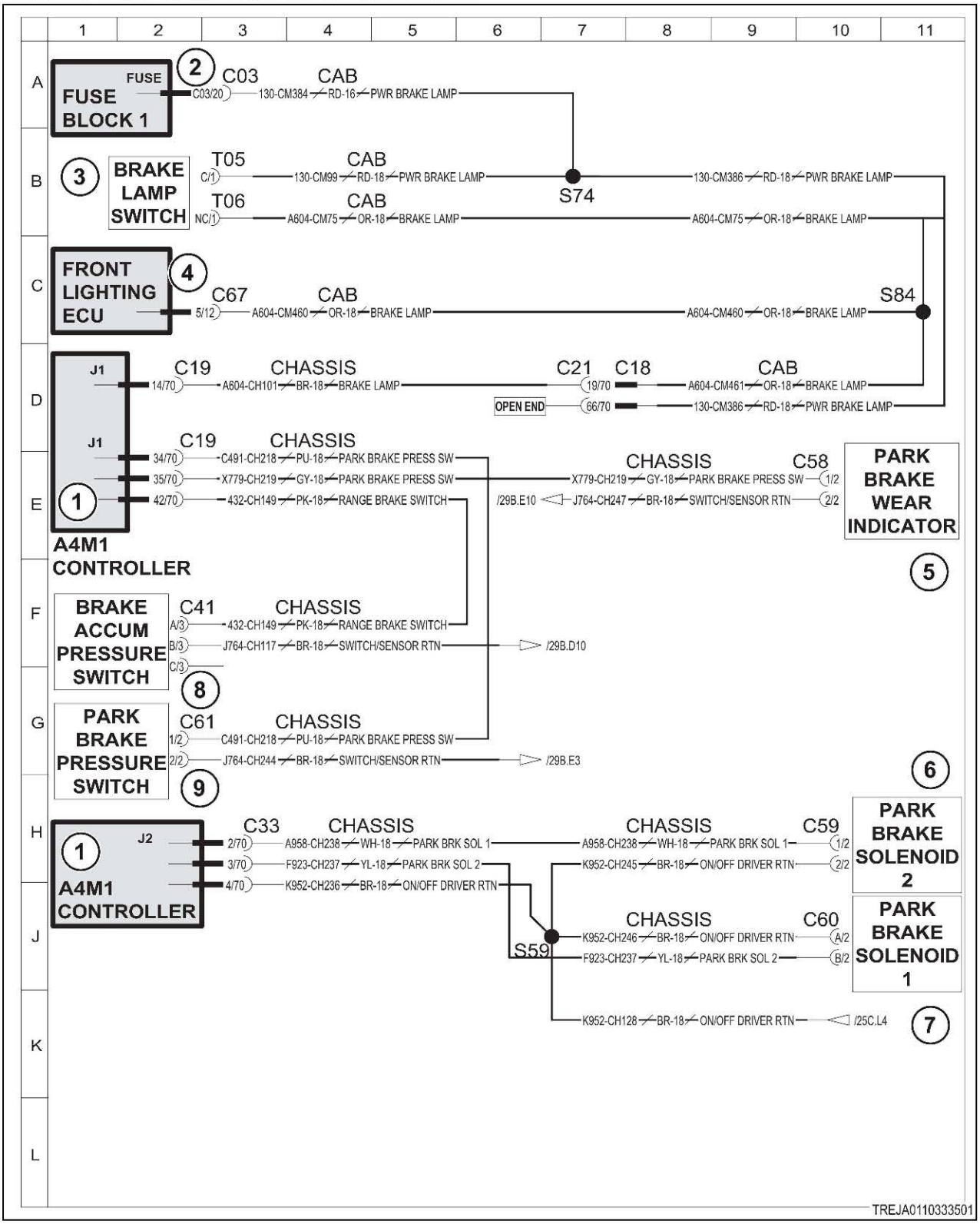

Fig. 162

Schematic legend		
Item	**Schematic term**	**Description**
1	A4M1 CONT	Transmission module
2	FUSE BLOCK 1	Fuse block 1
3	BRAKE LAMP SWITCH	Brake lamp switch
4	FRONT LIGHTING ECU	Front lighting module
5	PARK BRAKE WEAR INDICATOR	Park brake wear indicator
6	PARK BRK SOL 2	Park brake solenoid 2
7	PARK BRK SOL 1	Park brake solenoid 1
8	BRAKE ACCUM PRESSURE SWITCH	Brake accumulator pressure switch
9	PARK BRAKE PRESSURE SWITCH	Park brake pressure switch
--	SWITCH/SENSOR RTN	Switch/sensor return
--	PARK BRAKE PRESS SW	Park brake pressure switch
--	PWR BRAKE LAMP	Power brake lamp
--	ON/OFF DRIVER RTN	On/off driver return
--	PWR BRAKE LAMP	Power brake lamp

10.6.30 Code SA 03 SPN 625 FMI 02

The module detects that the signal of the proprietary network is erratic, intermittent, or not correct.

Diagnosis and solution

1. Check your CAT diagnostic module for proper operation.

a) Disconnect, reconnect, and restart your diagnostic module.

b) If available, connect your diagnostic module to a different machine.

Result

If your CAT diagnostic module appears to be functioning, continue diagnosing the machine.

2. Check the CAT datalink CAN Bus resistance.

a) Turn the key start switch to the off position.

b) Turn the battery disconnect switch to the off position.

c) Leave the transmission module harness connected to the module.

d) Check the resistance between contacts C12-D and C12-E of the datalink connector.

Result

The CAN Bus resistance should be approximately 120 ohms.

- The resistance is at or near 120 ohms.

  See step 3 to check if the error code persists.
- The resistance is above 120 ohms.

  The harness is open circuited or has corroded connections.

  Repair or replace the harness.

  See step 3 to validate the repair.

- The resistance is at or near 0 ohms.

  The harness is short circuited.

  Repair or replace the harness.

  See step 3 to validate the repair.

3. Check if the diagnostic code remains.

a) Check and clean the harness connector contacts.
b) Connect all the connectors.
c) Connect your CAT diagnostic module to the machine.
d) Turn the battery disconnect switch to the on position.
e) Turn the key start switch to the on position.
f) Check if the diagnostic code remains.

Result

- SPN 625 FMI 02 is not active.

  Stop.
- SPN 625 FMI 02 is active.

  Failure of the transmission module is possible but not common. Exit the procedure and do the procedure again. If the diagnostic code remains active, replace the module.

  Stop.

10.6.30.1 CAN electrical schematic

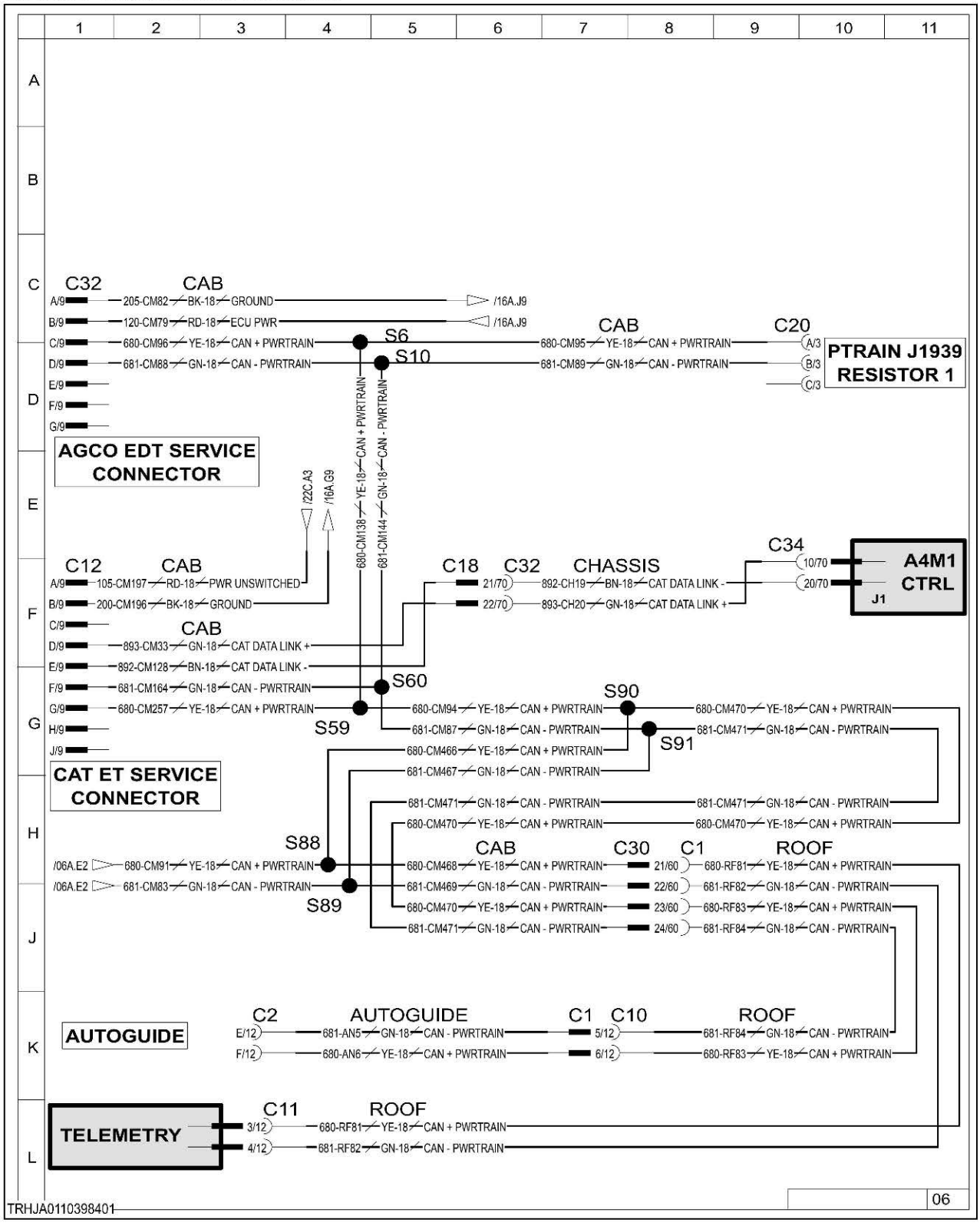

Fig. 163

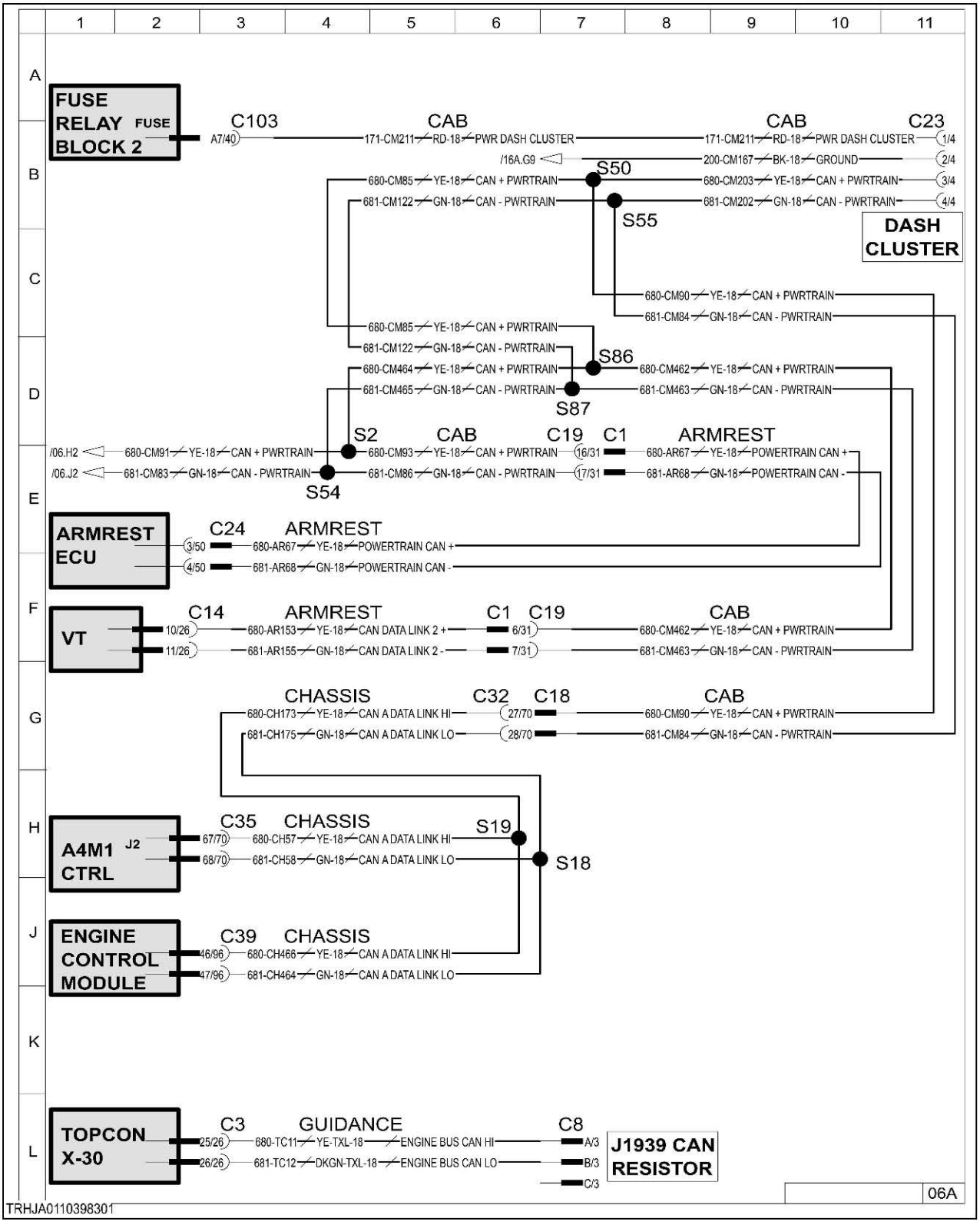

Fig. 164

10.6.31 Code SA 03 SPN 625 FMI 09

The module detects that the signal for the proprietary network is interrupted or not received within five seconds.

Diagnosis and solution

1. Check your CAT diagnostic module for proper operation.

a) Disconnect, reconnect, and restart your diagnostic module.
b) If available, connect your diagnostic module to a different machine.

Result

If your CAT diagnostic module appears to be functioning, continue diagnosing the machine.

2. Inspect all harness connections for loose contacts.
a) Turn the key start switch to the off position.
b) Turn the battery disconnect switch to the off position.
c) Inspect and clean all connectors and connector contacts:

- Look for bent or worn pins.
- Look for deformed or oversized sockets.
- Look for corrosion on the pins and sockets. Corrosion is a sign of a loose connection.
- Look for signs of overheating. Overheating is a sign of a poor connection, and can further loosen the pin or socket mount. The whole connector body should be replaced.

d) Make sure to inspect the following connector locations:

- Connector C12 (CAT Service connector near the fuse blocks).
- Cab harness to chassis harness connector contacts 21 and 22 of the C18 and C32 connectors.
- Transmission module J1-10 and J1-20 connector contacts.

e) Repair or replace any connector or harness found faulty.
f) See step 3 to validate the repairs.

3. Check if the diagnostic code remains.
a) Check and clean the harness connector contacts.
b) Connect all the connectors.
c) Connect your CAT diagnostic module to the machine.
d) Turn the battery disconnect switch to the on position.
e) Turn the key start switch to the on position.
f) Check if the diagnostic code remains.

Result

- SPN 625 FMI 09 is not active.

  Stop.
- SPN 625 FMI 09 is active.

  Failure of the transmission module is possible but not common. Exit the procedure and do the procedure again. If the diagnostic code remains active, replace the module.

  Stop.

10.6.31.1 CAN electrical schematic

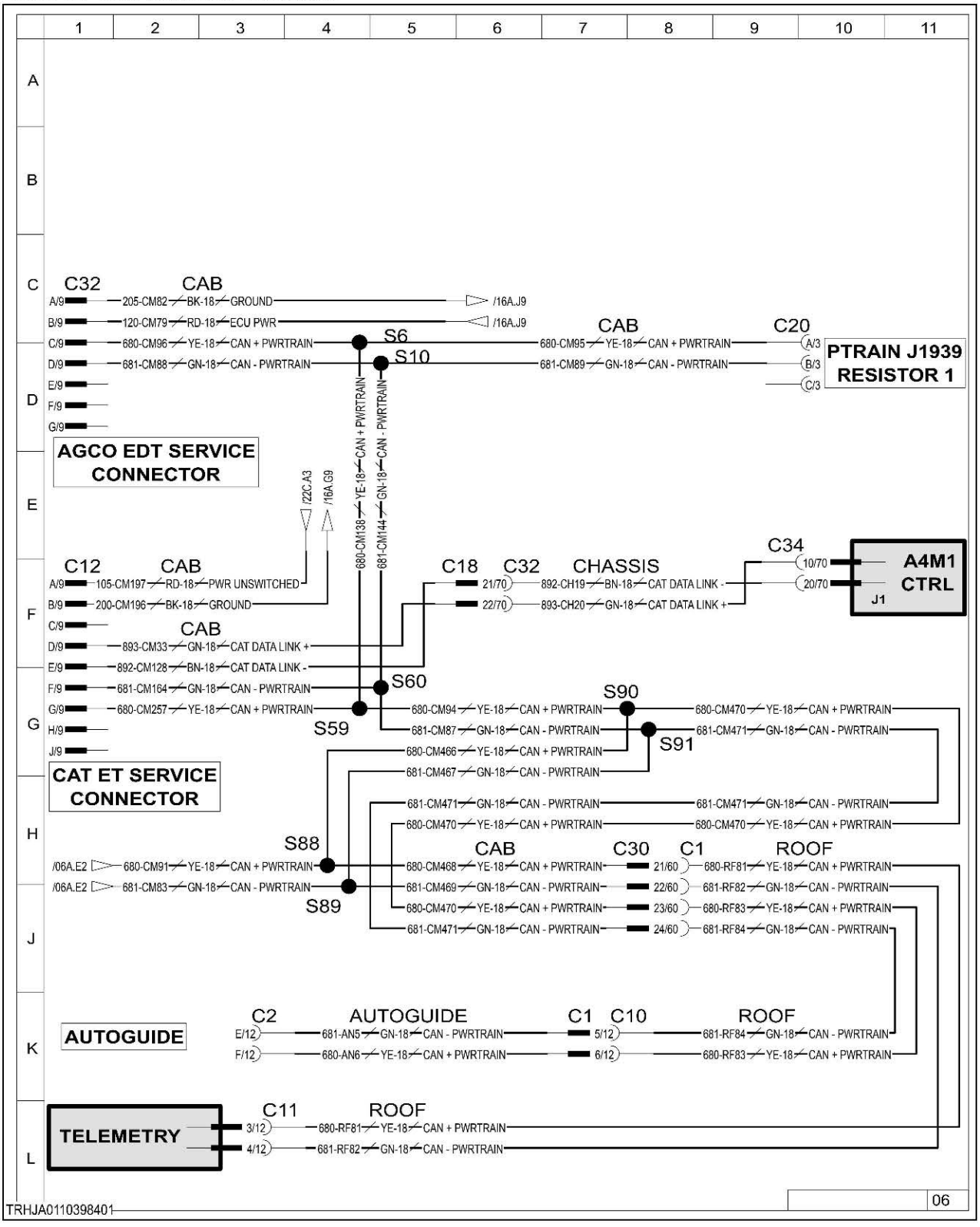

Fig. 165

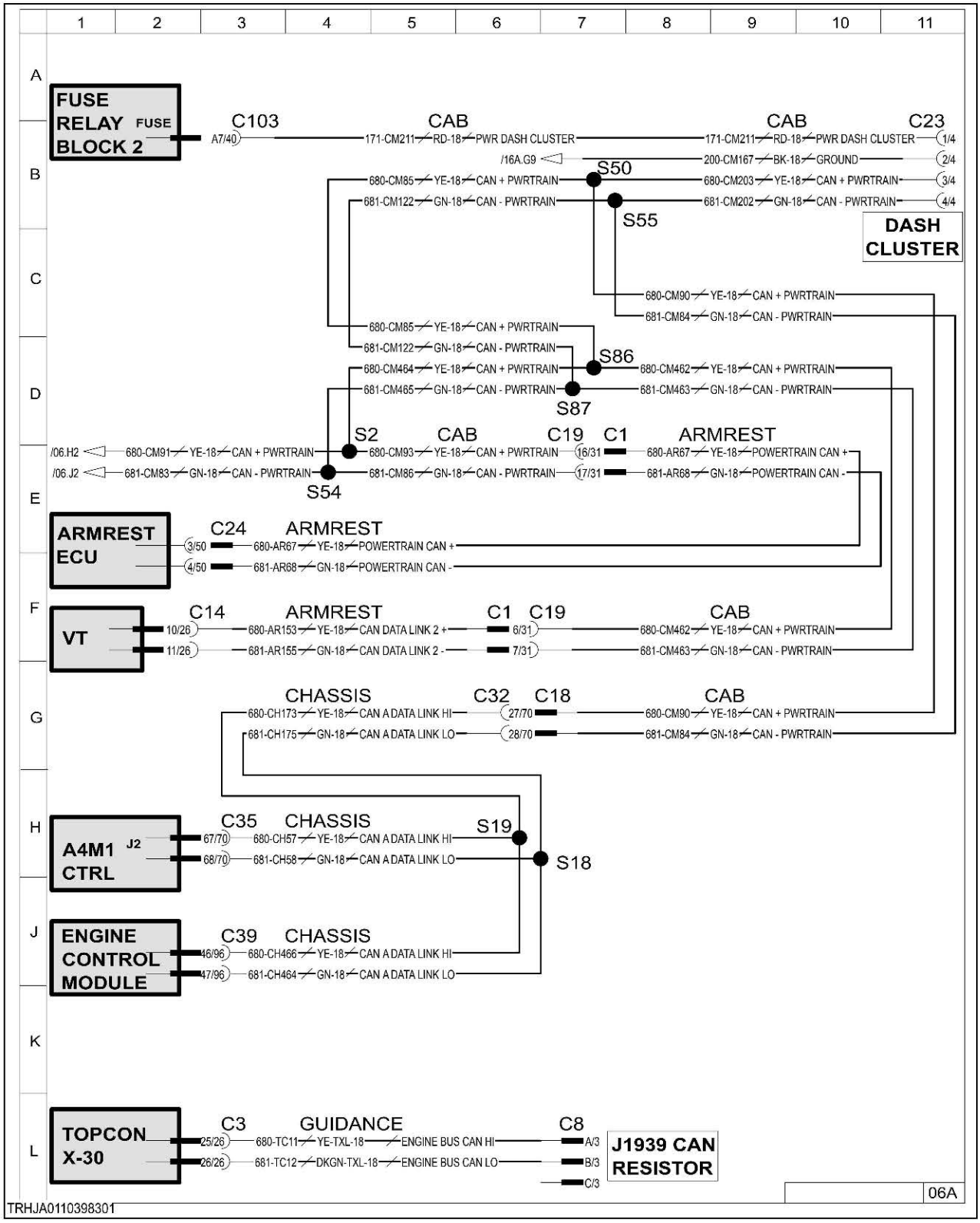

Fig. 166

10.6.32 Code SA 03 SPN 625 FMI 12

The module detects that the signal for the proprietary network is interrupted or not correct.

Diagnosis and solution

1. Check your CAT diagnostic module for proper operation.

a) Disconnect, reconnect, and restart your diagnostic module.
b) If available, connect your diagnostic module to a different machine.

Result

If your CAT diagnostic module appears to be functioning, continue diagnosing the machine.

2. Check the CAT datalink CAN Bus resistance.
a) Turn the key start switch to the off position.
b) Turn the battery disconnect switch to the off position.
c) Leave the transmission module harness connected to the module.
d) Check the resistance between contacts C12-D and C12-E of the datalink connector.

Result

The CAN Bus resistance should be approximately 120 ohms.

- The resistance is at or near 120 ohms.

  See step 3 to check for loose connections.
- The resistance is above 120 ohms.

  The harness is open circuited or has corroded connections.

  Repair or replace the harness.

  See step 5 to validate the repair.
- The resistance is at or near 0 ohms.

  The harness is short circuited.

  Repair or replace the harness.

  See step 5 to validate the repair.

3. Inspect all harness connections for loose contacts.
a) Inspect and clean all connectors and connector contacts:

- Look for bent or worn pins.
- Look for deformed or oversized sockets.
- Look for corrosion on the pins and sockets. Corrosion is a sign of a loose connection.
- Look for signs of overheating. Overheating is a sign of a poor connection, and can further loosen the pin or socket mount. The whole connector body should be replaced.

b) Make sure to inspect the following connector locations:

- Connector C12 (CAT Service connector near the fuse blocks).
- Cab harness to chassis harness connector contacts 21 and 22 of the C18 and C32 connectors.
- Transmission module J1-10 and J1-20 connector contacts.

Result

- Suspected loose or failed connections were found.

  Repair or replace any connector or harness found faulty.

  See step 5 to validate the repair.
- All connections appeared correct.

  See step 4 to check the harness for short circuits.

4. Check for a short-circuits in the cab or chassis harnesses.
a) Disconnect the cab harness from the chassis harness (located just above the transmission module).
b) Disconnect the J1 and J2 connectors on the transmission module.
c) Check the resistance from contacts 21 and 22 to all other C18 contacts in the cab harness.
d) Check the resistance from contacts 21 and 22 to all other C32 contacts in the chassis harness.

Result

- One or more resistance measurement is at or near 0 ohms.

  Repair or replace the respective harness.

  See step 5 to validate the repair.
- All resistance measurements are high (not near 0 ohms).

  See step 5 to check if the code remains.

5. Check if the diagnostic code remains.

a) Check and clean the harness connector contacts.
b) Connect all the connectors.
c) Connect your CAT diagnostic module to the machine.
d) Turn the battery disconnect switch to the on position.
e) Turn the key start switch to the on position.
f) Check if the diagnostic code remains.

Result

- SPN 625 FMI 12 is not active.

  Stop.
- SPN 625 FMI 12 is active.

  Failure of the transmission module is possible but not common. Exit the procedure and do the procedure again. If the diagnostic code remains active, replace the module.

  Stop.

10.6.32.1 CAN electrical schematic

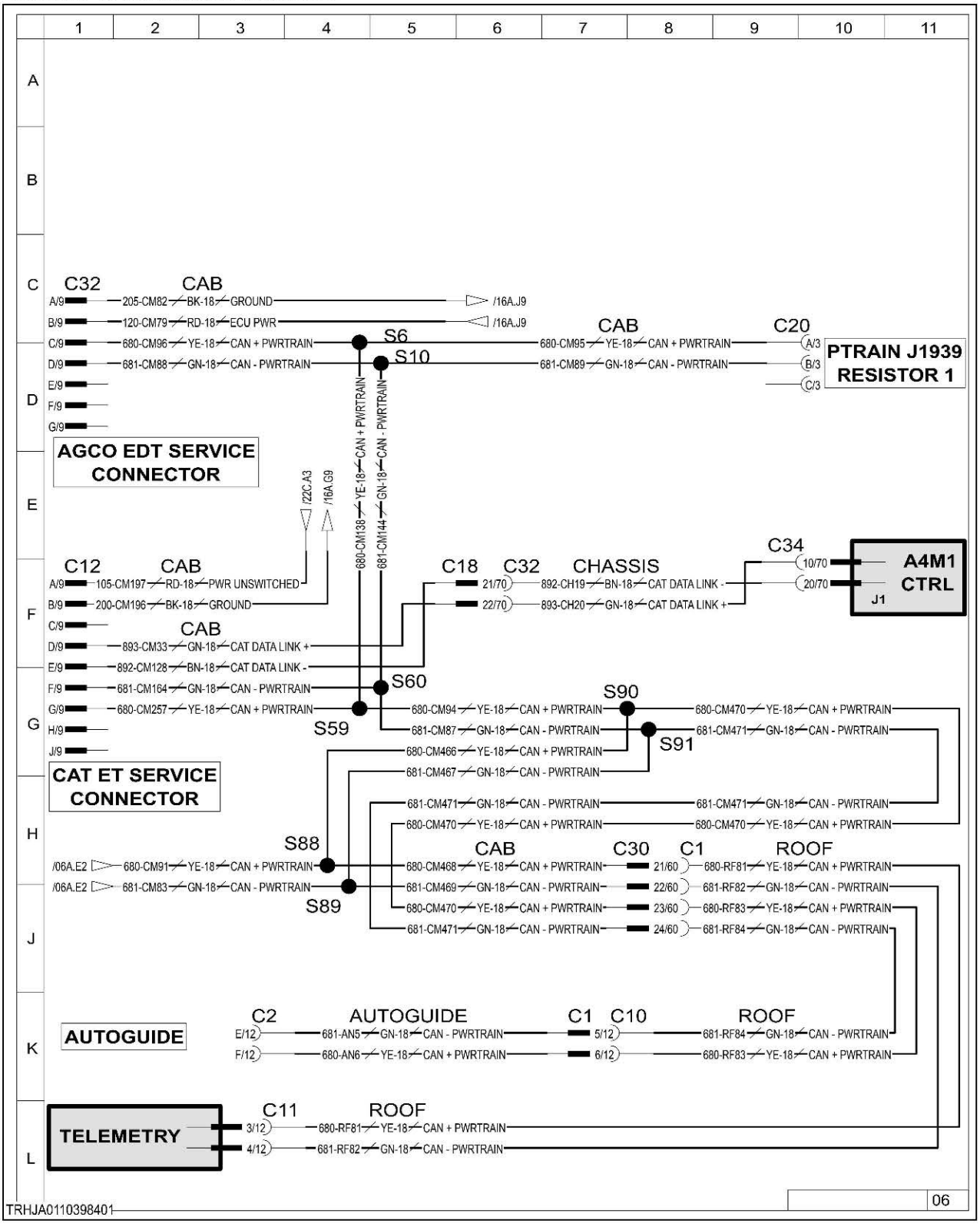

Fig. 167

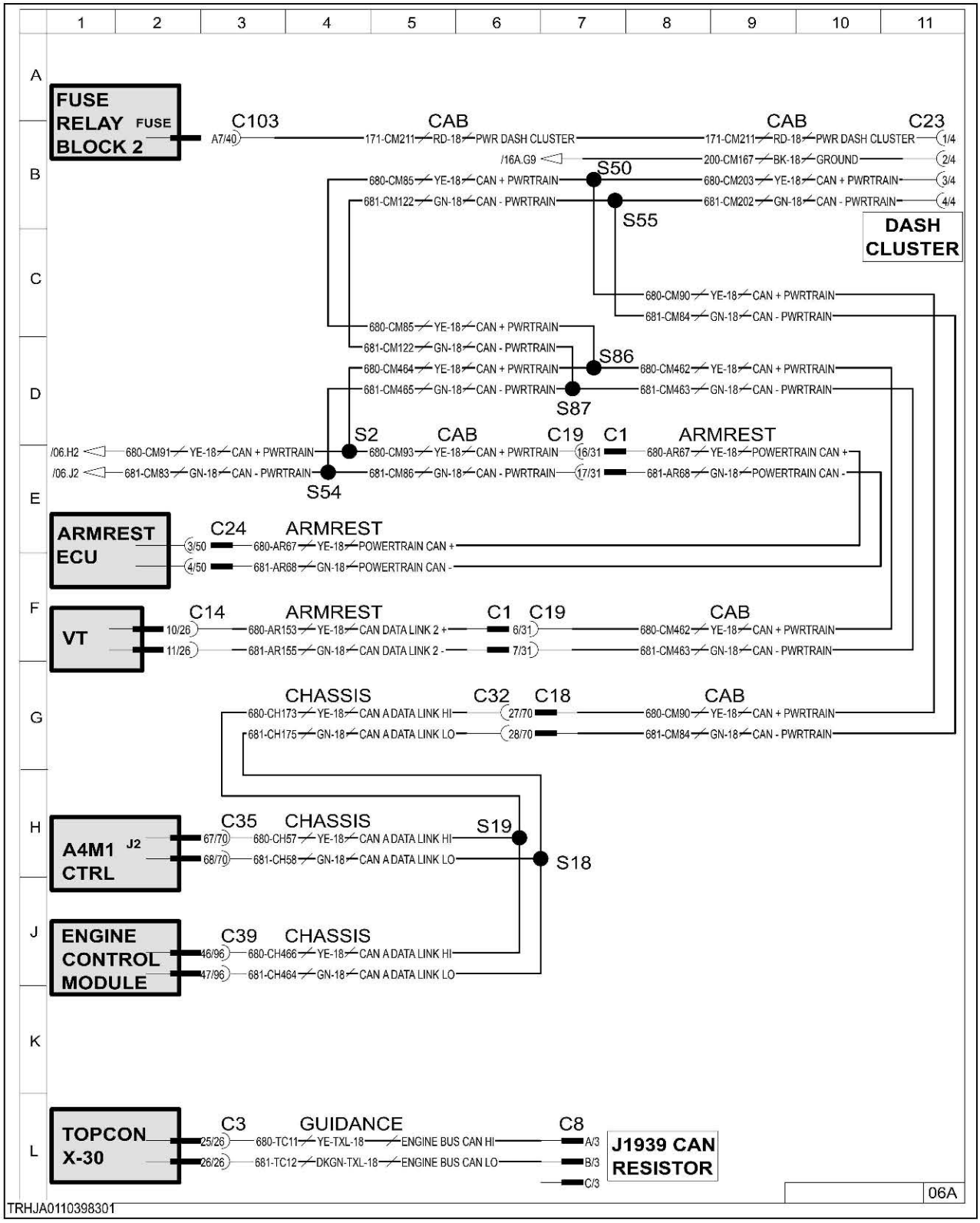

Fig. 168

10.6.33 Code SA 03 SPN 639 FMI 09

The controller area network (CAN) communication is abnormal.

The network transmission rate is low. The most likely cause is either a missing termination resistor, or poor connection on the CAN+/CAN- circuit. The power train J1939 CANBus is a 2-wire communication network connecting distributed modules throughout the machine. One of the requirements for this type of

communication network is a 120 ohm termination resistor from CAN+ to CAN-. This termination resistor (PTRAIN J1939 RESISTOR 1) is located near the lower-left corner of the main fuse panel in the cab. The absence of this resistor will cause noise on the network and slow down communication.

Diagnosis and solution

1. Check the termination resistor.

a) Turn the key start switch to the off position.
b) Turn the battery disconnect switch to the off position.
c) Disconnect the termination resistor from the fuse panel (connector C20).
d) Measure the resistance from contacts A and B of the termination resistor.

Result

- The resistance is not near 120 ohms.

  Replace the termination resistor.

  See step 4 to validate the repair.
- The resistance is at or near 120 ohms.

  Continue to step 2.

2. Check the network resistance.

a) Check the resistance between contacts C and D at the AGCO EDT service connector.
b) Check the resistance between contacts J2-67 and J2-68 at the transmission module.

Result

- Both resistance measurements are at or near 120 ohms.

  See step 3 to inspect the harnesses.
- Either resistance measurement is not near 120 ohms.

  Repair or replace the harness.

  See step 4 to validate the repair.

3. Inspect all harness connections.

a) Inspect and clean all connectors and connector contacts:

- Look for bent or worn pins.
- Look for deformed or oversized sockets.
- Look for corrosion on the pins and sockets. Corrosion is a sign of a loose connection.
- Look for signs of overheating. Overheating is a sign of a poor connection, and can further loosen the pin or socket mount. The whole connector body should be replaced.

b) Make sure to inspect the following connector locations:

- Chassis harness to cab harness connector (C18 & C32).
- Cab harness to armrest harness connector (C19 & C1).
- Transmission module J2 connector, contacts 67 and 68.

c) Repair or replace any connector or harness found faulty.
d) Continue to step 4 to see if the error code has cleared.

4. Check if the diagnostic code remains.

a) Check and clean the harness connector contacts.
b) Connect all the connectors.
c) Turn the battery disconnect switch to the on position.
d) Turn the key start switch to the on position.
e) Check if the diagnostic code remains.

Result

- SPN 639 FMI 09 is not active.

  Stop.
- SPN 639 FMI 09 is active.

  Failure of the module is possible but not common. Exit the procedure and do the procedure again. If the diagnostic code remains active, replace the module.

  Stop.

10.6.33.1 CAN electrical schematic

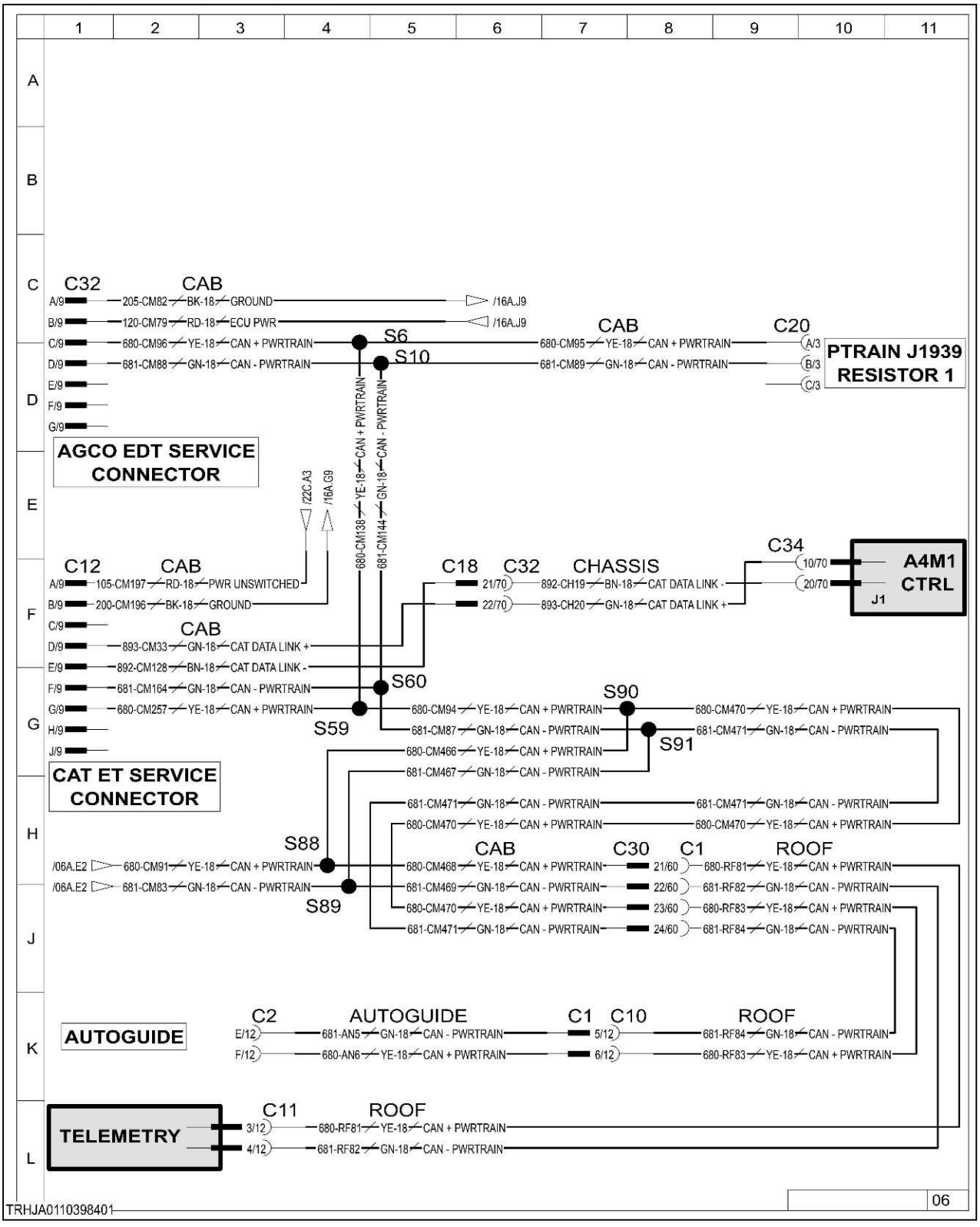

Fig. 169

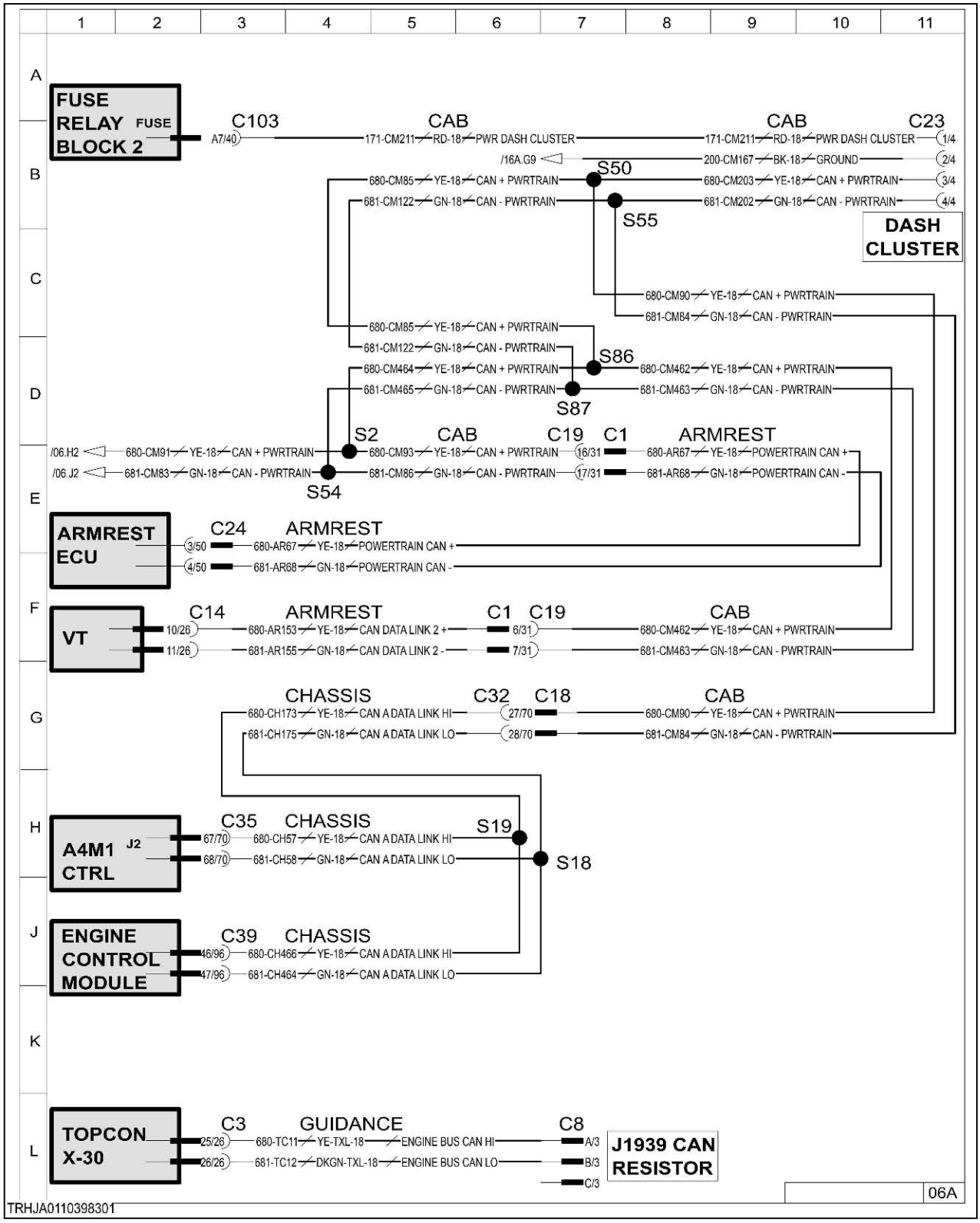

Fig. 170

10.6.34 Code SA 03 SPN 677 FMI 03

The module detects that the engine starter motor relay voltage is above normal range.

The transmission module has detected positive power at the neutral start relay when the relay is not commanded to be active. Likely cause is a short to battery power.

Diagnosis and solution

1. Check the relay coil circuit for a short-circuit to positive battery power.

a) Turn the key start switch to the off position.
b) Turn the battery disconnect switch to the off position.
c) Disconnect the J2 harness connector from the transmission module.
d) Remove the neutral start relay from the fuse/relay block 2.
e) Check resistance from contact J2-1 to all other connector contacts on the transmission module harness connector.

Result

- All resistance measurements are high (not near 0 ohms).

  See step 2 to check if the code remains.
- One or more resistance measurement is at or near 0 ohms.

  Repair or replace the harness.

  See step 2 to validate the repair.

2. Check if the diagnostic code remains.

a) Check and clean the harness connector contacts.
b) Connect all the connectors.
c) Turn the battery disconnect switch to the on position.
d) Turn the key start switch to the on position.
e) Operate the machine at low idle.
f) Check if the diagnostic code remains.

Result

- SPN 677 FMI 03 is not active.

  Stop.
- SPN 677 FMI 03 is active.

  Failure of the module is possible but not common. Exit the procedure and do the procedure again. If the diagnostic code remains active, replace the module.

  Stop.

10.6.34.1 Neutral start relay electrical schematic

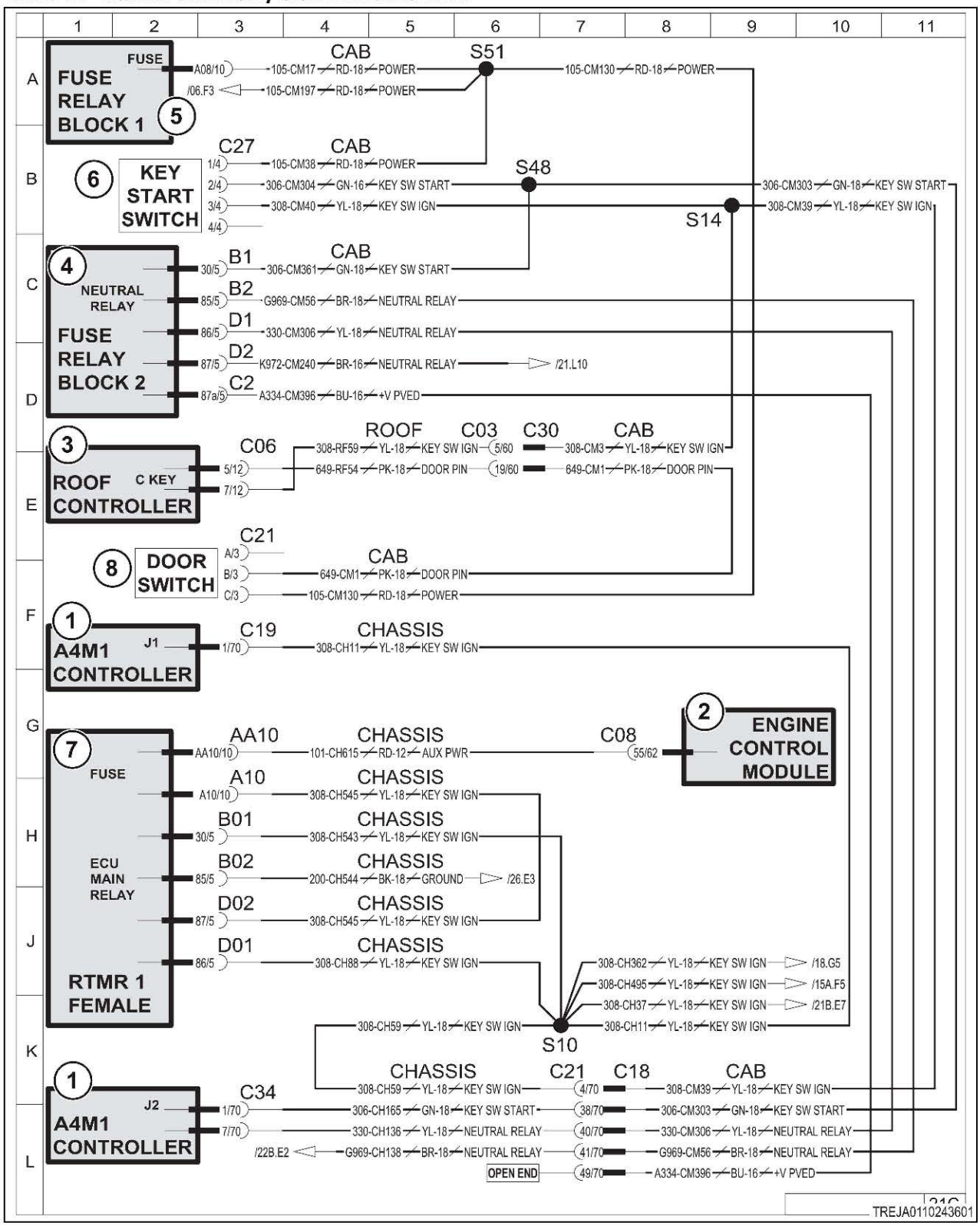

Fig. 171

Schematic legend		
Item	**Schematic term**	**Description**
1	A4M1 CONT	Transmission module
2	ENGINE CONTROL MODULE	Engine module
3	ROOF CONTROLLER	Roof lighting module
4	FUSE RELAY BLOCK 2	Fuse block 2
5	FUSE RELAY BLOCK 1	Fuse block 1
6	KEY START SWITCH	Key start switch
7	RTMR 2 FEMALE	Rear terminal mini-fuse relay 2 female
8	DOOR SWITCH	Door switch
--	KEY SW START	Key start switch
--	KEY SW IGN	Key ignition switch
--	+V PVED	+V proportional valve electrohydraulic digital
--	DOOR PIN	Door pin
--	SW PWR	Power
--	KEY SW RUN/CRANK	Key crank/run switch
--	ON/OFF DRVR RTN	On/off driver return

10.6.35 Code SA 03 SPN 677 FMI 05

The module detects that the current through the engine starter motor relay is below normal range.

The transmission module has detected an open circuit in the neutral start relay circuit. The most likely cause is a disconnected or faulty relay module.

Diagnosis and solution

1. Check the relay coil.
   a) Turn the key start switch to the off position.
   b) Turn the battery disconnect switch to the off position.
   c) Unplug the neutral start relay.
   d) Check resistance across relay coil from contact B1 to B2.

   Result

   - The resistance is between 118 and 129 ohms.

     The relay coil is not at fault.

     Leave the relay unplugged.

     See step 2 to check for open circuit.
   - The resistance is above 129 ohms.

     Replace the relay.

     See step 3 to validate the repair.

2. Check the harness for an open circuit.
   a) Make sure the relay is still unplugged from the previous step.
   b) Install a shorting jumper between contacts B1 and B2 of the relay/fuse block.
   c) Disconnect the J2 harness connector from the transmission module.
   d) Check the resistance between contacts J2-1 and J2-8 on the transmission module harness connector.

Result

- The resistance is at or near 0 ohms.

  The harness is not open.

  See step 3 to check if the code remains.
- The resistance is high (not near 0 ohms).

  Repair or replace the harness.

  See step 3 to validate the repair.

3. Check if the diagnostic code remains.

a) Check and clean the harness connector contacts.
b) Connect all the connectors.
c) Turn the battery disconnect switch to the on position.
d) Turn the key start switch to the on position.
e) Operate the machine at low idle.
f) Check if the diagnostic code remains.

Result

- SPN 677 FMI 05 is not active.

  Stop.
- SPN 677 FMI 05 is active.

  Failure of the transmission module is possible but not common. Exit the procedure and do the procedure again. If the diagnostic code remains active, replace the module.

  Stop.

10.6.35.1 Neutral start relay electrical schematic

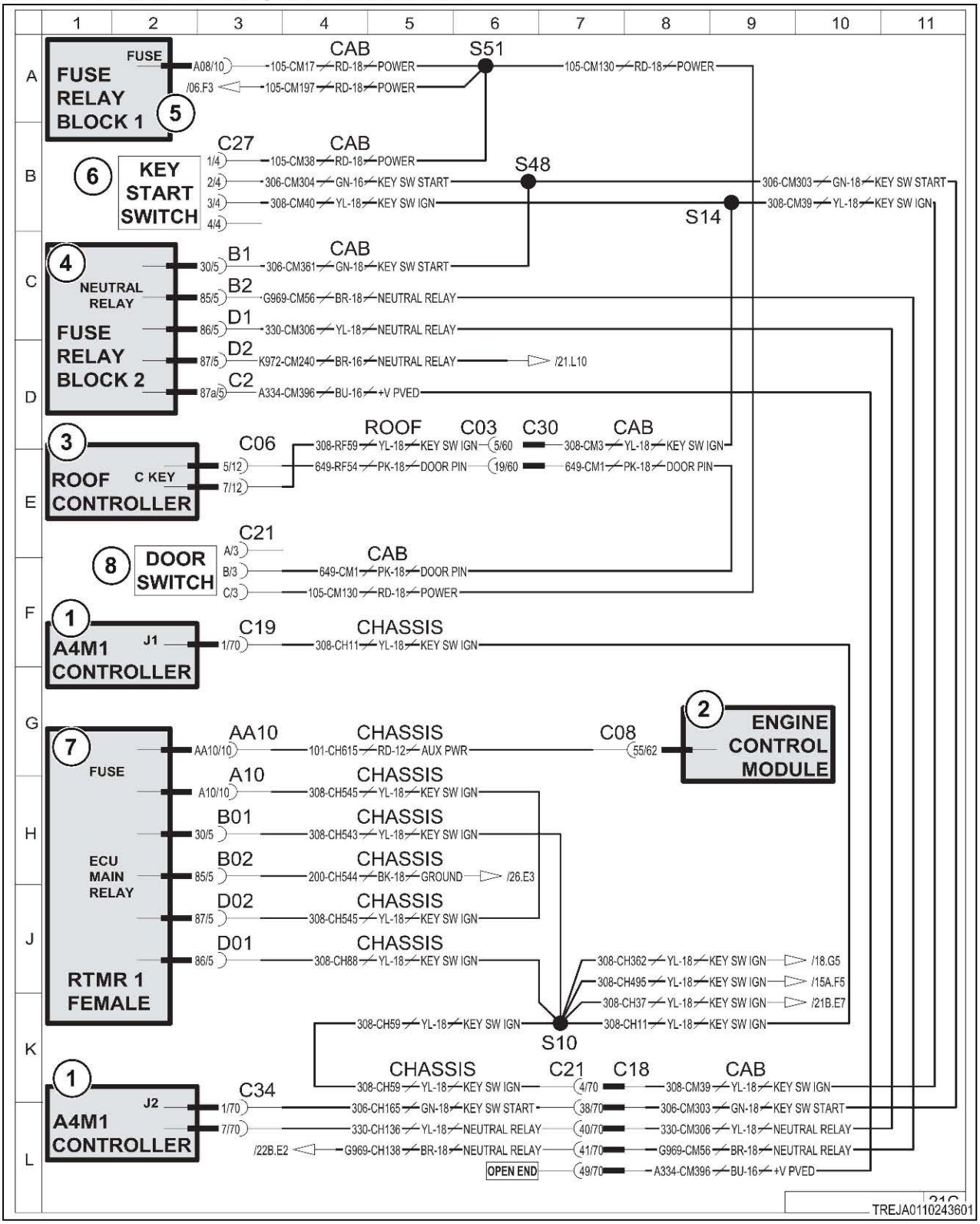

Fig. 172

Schematic legend		
Item	Schematic term	Description
1	A4M1 CONT	Transmission module
2	ENGINE CONTROL MODULE	Engine module
3	ROOF CONTROLLER	Roof lighting module
4	FUSE RELAY BLOCK 2	Fuse block 2
5	FUSE RELAY BLOCK 1	Fuse block 1
6	KEY START SWITCH	Key start switch
7	RTMR 2 FEMALE	Rear terminal mini-fuse relay 2 female
8	DOOR SWITCH	Door switch
--	KEY SW START	Key start switch
--	KEY SW IGN	Key ignition switch
--	+V PVED	+V proportional valve electrohydraulic digital
--	DOOR PIN	Door pin
--	SW PWR	Power
--	KEY SW RUN/CRANK	Key crank/run switch
--	ON/OFF DRVR RTN	On/off driver return

10.6.36 Code SA 03 SPN 677 FMI 06

The module detects that the current through the engine starter motor relay is above normal range.

The transmission module has detected excessive current flow in the neutral start relay coil. The most likely cause is a faulty relay module or short circuit.

Diagnosis and solution

1. Check the relay coil.
- a) Turn the key start switch to the off position.
- b) Turn the battery disconnect switch to the off position.
- c) Unplug the neutral start relay.
- d) Check resistance across relay coil from contact B1 to B2.

Result

- The resistance is between 118 and 129 ohms.

  The relay coil is not at fault.

  Leave the relay unplugged.

  See step 2 to check the harness.
- The resistance is at or near 0 ohms.

  Replace the relay.

  See step 3 to validate the repair.

2. Check the harness for a short-circuit to ground.
- a) Make sure the relay is still unplugged from the previous step.
- b) Disconnect the J2 harness connector from the transmission module.
- c) Check resistance between contacts J2-1 and J2-8 on the transmission module harness connector.

Result

- The resistance is high (not near 0 ohms).

  The harness is not shorted.

  See step 3 to check if the code remains.
- The resistance is at or near 0 ohms.

  Repair or replace the harness.

  See step 3 to validate the repair.

3. Check if the diagnostic code remains.

a) Check and clean the harness connector contacts.
b) Connect all the connectors.
c) Turn the battery disconnect switch to the on position.
d) Turn the key start switch to the on position.
e) Operate the machine at low idle.
f) Check if the diagnostic code remains.

Result

- SPN 677 FMI 03 is not active.

  Stop.
- SPN 677 FMI 03 is active.

  Failure of the transmission module is possible but not common. Exit the procedure and do the procedure again. If the diagnostic code remains active, replace the module.

  Stop.

10.6.36.1 Neutral start relay electrical schematic

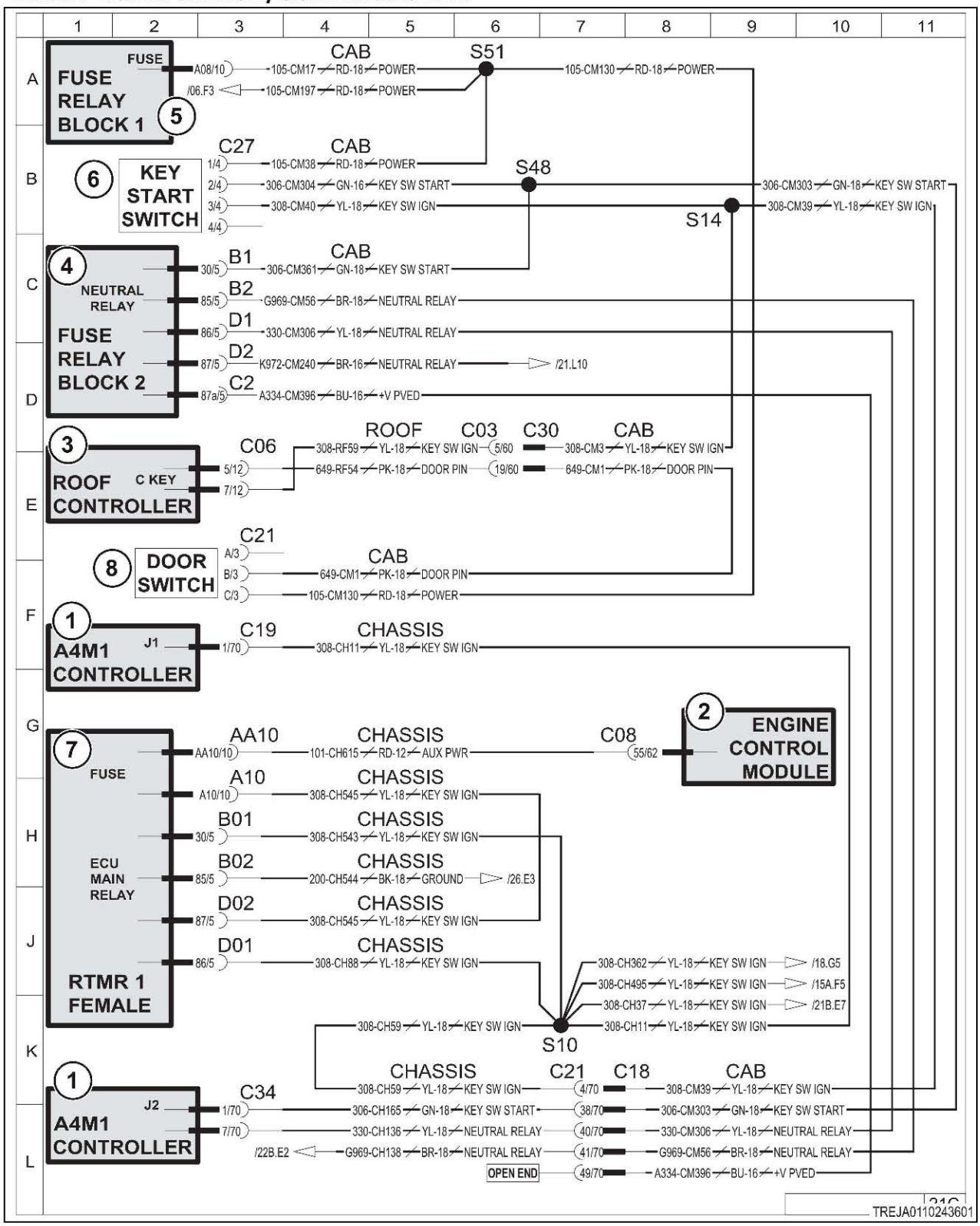

Fig. 173

Schematic legend		
Item	**Schematic term**	**Description**
1	A4M1 CONT	Transmission module
2	ENGINE CONTROL MODULE	Engine module
3	ROOF CONTROLLER	Roof lighting module
4	FUSE RELAY BLOCK 2	Fuse block 2
5	FUSE RELAY BLOCK 1	Fuse block 1
6	KEY START SWITCH	Key start switch
7	RTMR 2 FEMALE	Rear terminal mini-fuse relay 2 female
8	DOOR SWITCH	Door switch
--	KEY SW START	Key start switch
--	KEY SW IGN	Key ignition switch
--	+V PVED	+V proportional valve electrohydraulic digital
--	DOOR PIN	Door pin
--	SW PWR	Power
--	KEY SW RUN/CRANK	Key crank/run switch
--	ON/OFF DRVR RTN	On/off driver return

10.6.37 Code SA 03 SPN 678 FMI 03

The engine module has detected that the 8 volt supply circuit voltage is above normal.

The transmission module has detected that its 8-volt output power to the steering system sensors is out of range, and too high. The fault may be internal to the transmission module, or may be a short to battery power in one of the sensor circuits.

Diagnosis and solution

1. Check for a short-circuit to battery power.
   a) Turn the key start switch to the off position.
   b) Turn the battery disconnect switch to the off position.
   c) Disconnect the J1 and J2 connectors from the transmission module.
   d) Check the resistance between contact J1-44 to all other J1 and J2 harness connector contacts.

   Result

   - All resistance measurements are high (not near 0 ohms).

     The fault likely exists in the transmission module.

     See step 6 to validate the error and replace the transmission module if the fault continues.
   - One or more resistance measurements was at or near 0 ohms.

     Isolate the short circuit to either the steering wheel circuit or the steering motor circuit.

     See step 2 to isolate the harness.

2. Isolate the transmission harness, and re-check for short.
   a) Disconnect the transmission harness from the chassis harness. The connector is located just aft of the cab, on the upper right side of the transmission.
   b) Re-check the resistance between the J1-44 contact and any contacts previously found to be shorted.

Result

- All resistance measurements are high (not near 0 ohms).

  The fault likely exists in the disconnected transmission harness or sensor.

  Continue to step 3.
- One or more resistance measurements was at or near 0 ohms.

  See step 4 to isolate the cab harness, and recheck for short.

3. Check the transmission harness for short.

a) Check the resistance from contact C13-34 on the transmission harness, to all other contacts.
b) Disconnect the steering motor speed sensor from the harness.
c) Re-check the resistance from contact C13-34 on the transmission harness, to all other contacts.

Result

- A short circuit was detected when the sensor was connected, but cleared when the sensor was removed.

  Replace the sensor.

  See step 6 to validate the repair.
- A short circuit was detected when the sensor was connected, and remained shorted after the sensor was removed.

  Repair or replace the transmission harness.

  See step 6 to validate the repair.

4. Isolate the cab harness, and check for short.

a) Disconnect the cab harness from the chassis harness. The two connectors are located just above the transmission module.
b) Re-check the resistance between the J1-44 contact and any contacts previously found to be shorted.

Result

- All resistance measurements are high (more than 1000 ohms).

  The fault likely exists in the disconnected cab harness or sensor.

  See step 5 to check the cab harness.
- One or more resistance measurements was at or near 0 ohms.

  The chassis harness is shorted.

  Repair or replace the chassis harness.

  See step 6 to validate the repair.

5. Check the cab harness for short.

a) Check the resistance from contact C18-33 on the cab harness, to all other contacts.
b) Disconnect the steering wheel position sensor from the harness.
c) Re-check the resistance from contact C18-33 on the cab harness, to all other contacts.

Result

- A short circuit was detected when the sensor was connected, but cleared when the sensor was removed.

  Replace the sensor.

  See step 6 to validate the repair.

- A short circuit was detected when the sensor was connected, and remained shorted after the sensor was removed.

  Repair or replace the cab harness.

  See step 6 to validate the repair.

6. Check if the diagnostic code remains.

a) Inspect and clean all harness connectors and their contacts.
b) Connect all the connectors and sensors.
c) Turn the battery disconnect switch to the on position.
d) Turn the key start switch to the on position.
e) Operate the machine at low idle.
f) Check if the diagnostic code remains.

Result

- SPN 678 FMI 03 is not active.

  Stop.
- SPN 678 FMI 03 is active.

  Failure of the transmission module is possible but not common. Exit the procedure and do the procedure again. If the diagnostic code remains active, replace the module.

  Stop.

10.6.37.1 8 volt sensor supply electrical schematic

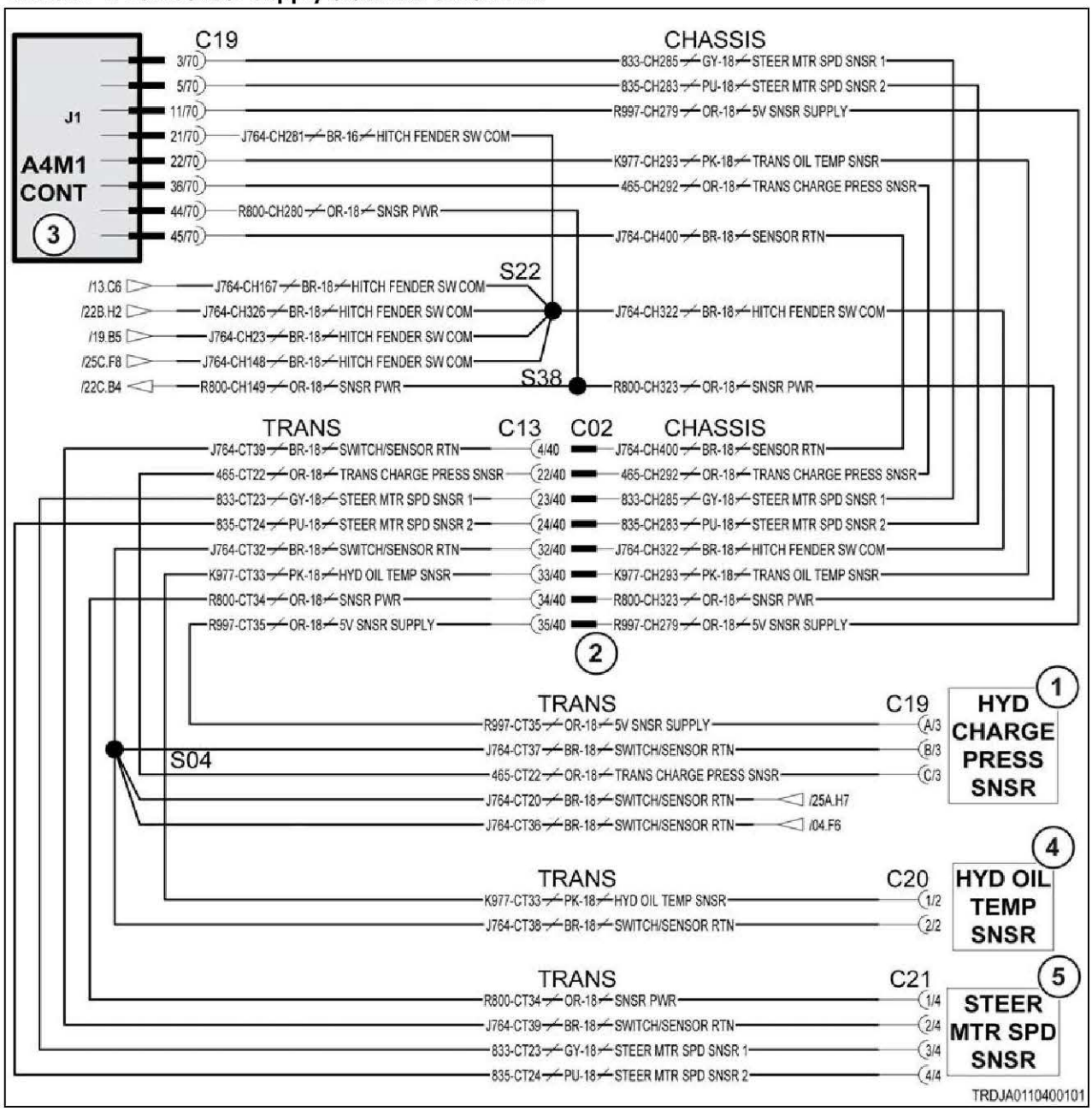

Fig. 174

Schematic legend		
Item	**Schematic term**	**Description**
1	HYD CHARGE PRESS SNSR	Hydraulic charge pressure sensor
2	Chassis to transmission connectors	Chassis to transmission connectors
3	A4M1 CONT	Transmission module
4	HYD OIL TEMP SNSR	Hydraulic oil temperature sensor
5	STEER MTR SPD SNSR	Steering motor speed sensor
--	5V SNSR SUPPLY	5 volt sensor supply
--	HITCH FENDER SW COM	Hitch fender switch common

Schematic legend		
Item	**Schematic term**	**Description**
--	TRANS CHARGE PRESS SNSR	Transmission charge pressure sensor
--	SNSR PWR	Sensor power
--	SENSOR RTN	Sensor return

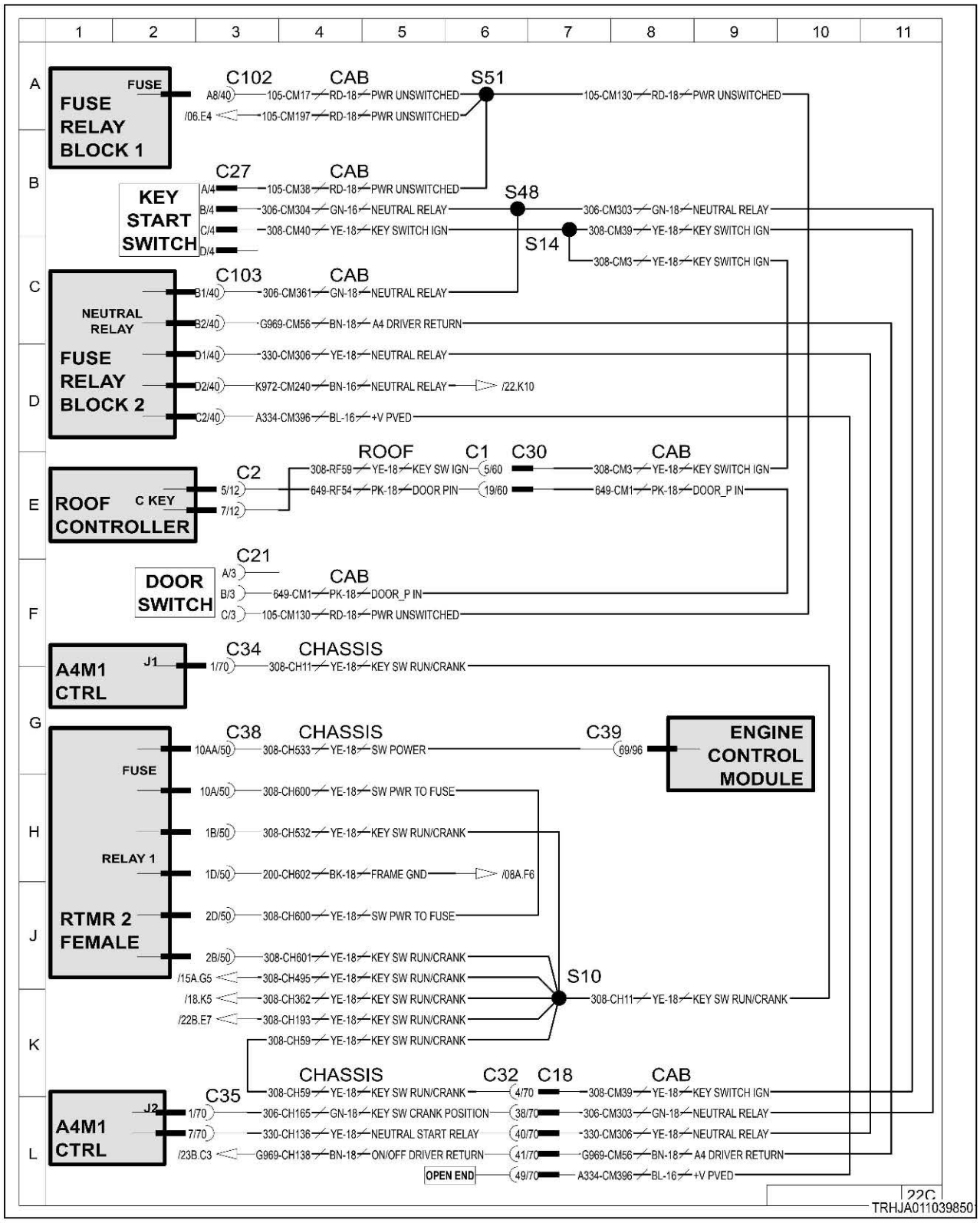

Fig. 175

10.6.38 Code SA 03 SPN 678 FMI 03

Short-circuit to ground in the 8 volt supply circuit.

The transmission module has detected that its 8-volt output power to the steering system sensors is out of range, with amperage too high. The fault may be internal to the transmission module, or may be a short to ground in one of the sensor circuits.

Diagnosis and solution

1. Check for a short-circuit to ground.
- a) Turn the key start switch to the off position.
- b) Turn the battery disconnect switch to the off position.
- c) Disconnect the J1 connector from the transmission module.
- d) Check the resistance between contacts J1-44 and J1-45.

Result

- The resistance is high (more than 1000 ohms).

  The fault likely exists in the transmission module.

  Validate the error and replace the transmission module if the fault continues.

  See step 6 to validate the repair.
- The resistance is at or near 0 ohms.

  Isolate the short circuit to either the steering wheel circuit or the steering motor circuit.

  See step 2 to check the transmission harness.

2. Isolate the transmission harness, and re-check for short.
- a) Disconnect the transmission harness from the chassis harness. The connector is located just aft of the cab, on the upper right side of the transmission.
- b) Re-check the resistance between contacts J1-44 and J1-45.

Result

- The resistance measurement is high (not near 0 ohms).

  The fault likely exists in the disconnected transmission harness or sensor.

  See step 3 to check for short.
- The resistance remains at or near 0 ohms.

  Isolate the cab harness, and recheck for short.

  See step 4 to check the cab harness.

3. Check the transmission harness for short.
- a) Check the resistance between contacts C13-4 and C13-34 on the transmission harness.
- b) Disconnect the steering motor speed sensor from the harness.
- c) Re-check the resistance between contacts C13-4 and C13-34 on the transmission harness.

Result

- A short circuit was detected when the sensor was connected, but cleared when the sensor was removed.

  Replace the sensor.

  See step 6 to validate the repair.

- A short circuit was detected when the sensor was connected, and remained shorted after the sensor was removed.

  Repair or replace the transmission harness.

  See step 6 to validate the repair.

4. Isolate the cab harness, and check for short.

a) Disconnect the cab harness from the chassis harness. The two connectors are located just above the transmission module.
b) Re-check the resistance between contacts J1-44 and J1-45.

Result

- The resistance measurement is high (more than 1000 ohms).

  The fault likely exists in the disconnected cab harness or sensor.

  See step 5 to check for short.
- The resistance measurement is at or near 0 ohms.

  The chassis harness is shorted.

  Repair or replace the chassis harness.

  See step 6 to validate the repair.

5. Check the cab harness for short.

a) Check the resistance between contacts C18-30 and C18-33 on the cab harness.
b) Disconnect the steering wheel position sensor from the harness.
c) Re-check the resistance between contacts C18-30 and C18-33 on the cab harness.

Result

- A short circuit was detected when the sensor was connected, but cleared when the sensor was removed.

  Replace the sensor.

  See step 6 to validate the repair.
- A short circuit was detected when the sensor was connected, and remained shorted after the sensor was removed.

  Repair or replace the cab harness.

  See step 6 to validate the repair.

6. Check if the diagnostic code remains.

a) Check and clean the harness connector contacts.
b) Connect all the connectors.
c) Turn the battery disconnect switch to the on position.
d) Turn the key start switch to the on position.
e) Operate the machine at low idle.
f) Check if the diagnostic code remains.

Result

- SPN 678 FMI 04 is not active.

  Stop.
- SPN 678 FMI 04 is active.

  Failure of the transmission module is possible but not common. Exit the procedure and do the procedure again. If the diagnostic code remains active, replace the module.

  Stop.

10.6.38.1 8 volt sensor supply electrical schematic

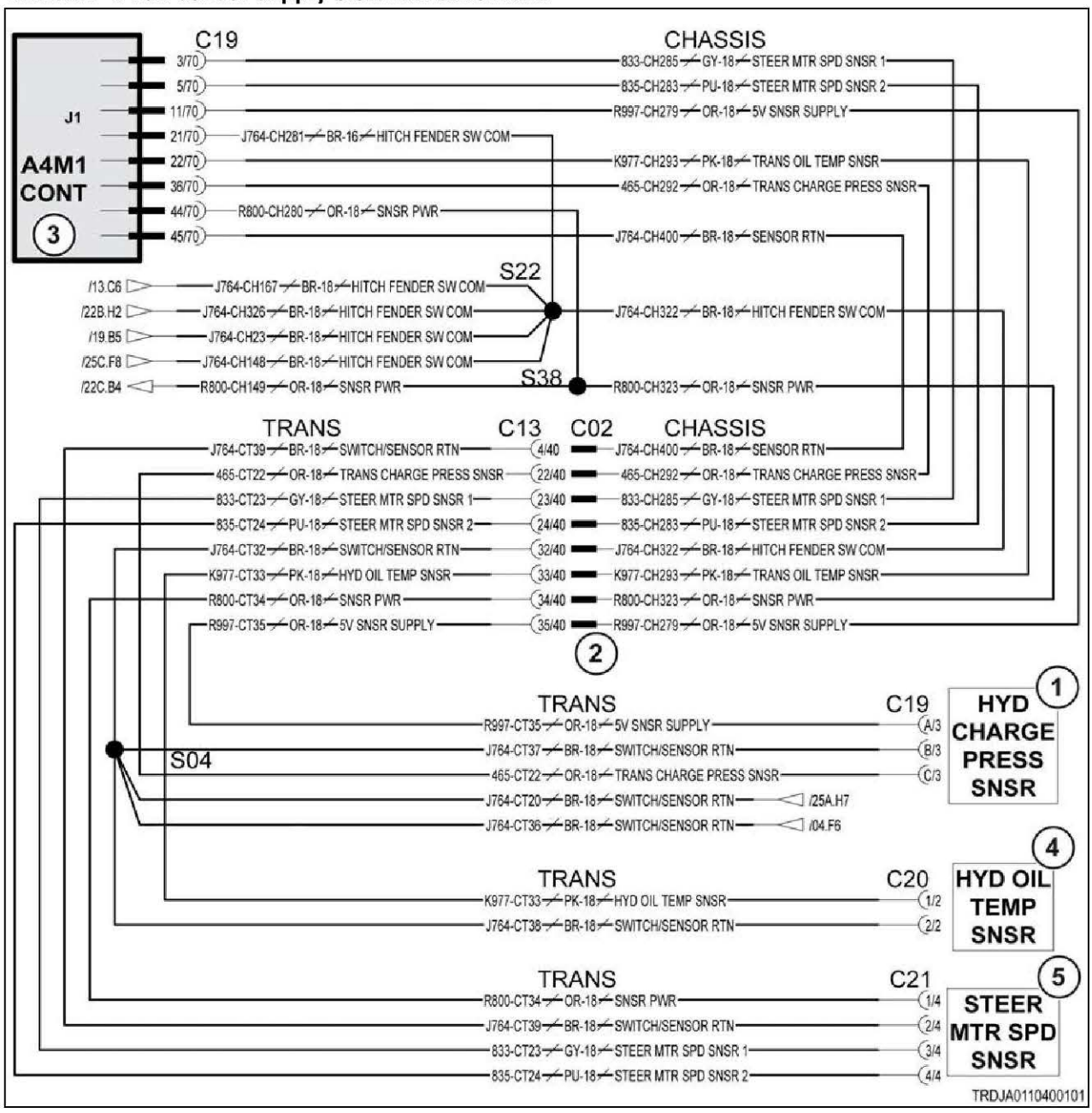

Fig. 176

Schematic legend		
Item	**Schematic term**	**Description**
1	HYD CHARGE PRESS SNSR	Hydraulic charge pressure sensor
2	Chassis to transmission connectors	Chassis to transmission connectors
3	A4M1 CONT	Transmission module
4	HYD OIL TEMP SNSR	Hydraulic oil temperature sensor
5	STEER MTR SPD SNSR	Steering motor speed sensor
--	5V SNSR SUPPLY	5 volt sensor supply
--	HITCH FENDER SW COM	Hitch fender switch common

Schematic legend		
Item	**Schematic term**	**Description**
--	TRANS CHARGE PRESS SNSR	Transmission charge pressure sensor
--	SNSR PWR	Sensor power
--	SENSOR RTN	Sensor return

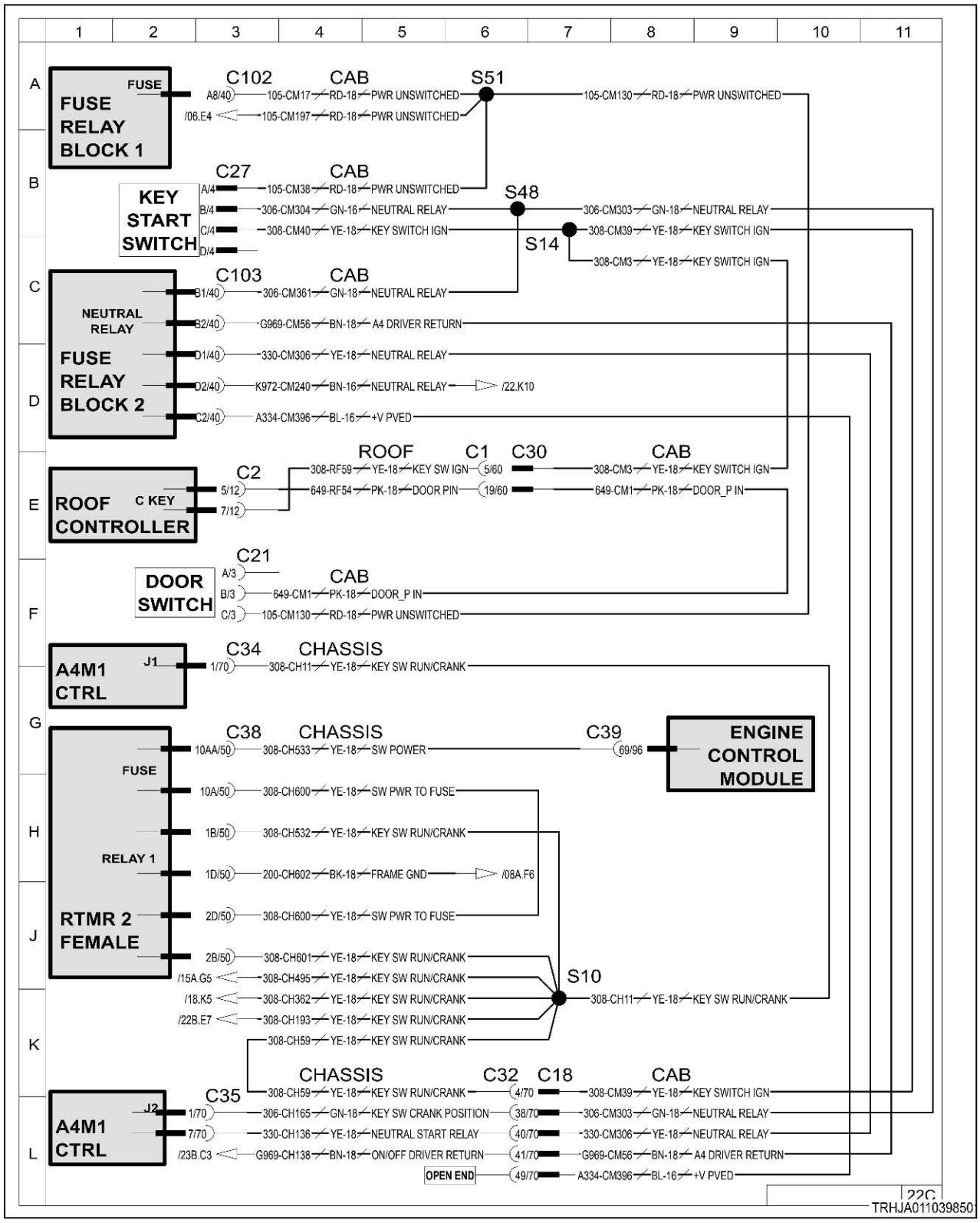

Fig. 177

10.6.39 Code SA 03 SPN 684 FMI 00

The module detects that the inching pedal position sensor voltage is above normal.

The transmission module is detecting the voltage produced by the inching pedal sensor is too high. The position sensor uses Pulse Width Modulation (PWM) to simulate varying voltages by rapidly turning the output signal on and off. The duty cycle of this switching determines the "effective" voltage produced by the sensor. The likely cause of the fault is the inching pedal sensor is misadjusted and the duty cycle is too high.

- (1) Inching pedal.
- (2) Inching pedal position sensor.
- (3) Upper mounting screw.
- (4) Lower mounting screw.

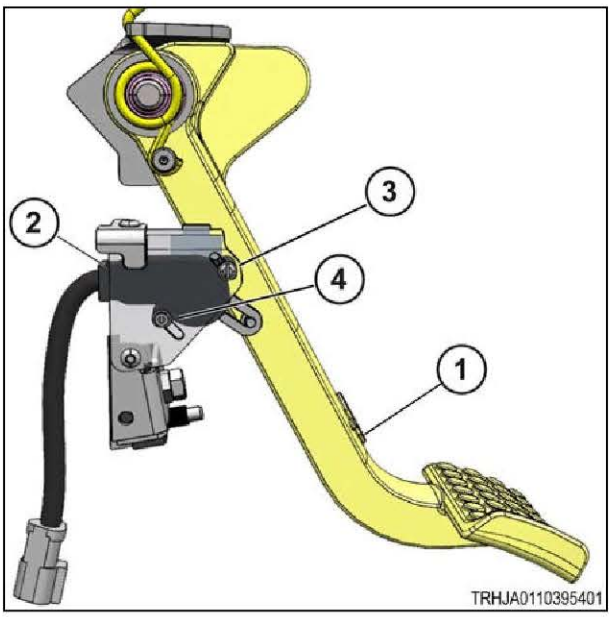

Fig. 178

Diagnosis and solution

1. Check the inching pedal duty cycle.

a) Turn the key start switch to the off position.
b) Turn the battery disconnect switch to the off position.
c) Connect CAT electronic technician to the CAT electronic technician service connector.
d) Turn the battery disconnect switch to the on position.
e) Turn the key start switch to the on position.
f) Monitor the duty cycle of the inching pedal sensor as the pedal is moved.
g) Fully depress and then fully release the inching pedal.

Result

Expected result -

When the inching pedal is fully depressed the duty cycle should be between10% and 14%.

When the inching pedal is released the duty cycle should be between 85% and 90%.

Results:

- The inching pedal sensor's duty cycle is within range for both depressed and released positions.

  The mechanical position of the sensor is correct.

  Perform the calibration procedure to set the duty cycle limits in the transmission module.

  See step 3 to calibrate the sensor.
- The inching pedal sensor's duty cycle is out of range for either depressed or released positions.

  See step 2 to adjust the inching pedal sensor's mechanical position.

2. Adjust the sensor mechanical position.

a) Make sure the machine is still running, and the CAT diagnostic module is still connected.
b) Fully depress the inching pedal, and block the pedal in the depressed position.

c) Loosen both sensor mounting screws (3 & 4).
d) Without rotating the sensor body, slide the sensor up or down as necessary until the PWM duty cycle is between 10% and 14%.

- Raising the sensor body will increase the lower duty cycle.
- Lowering the sensor body will decrease the lower duty cycle.

e) Retighten the mounting screws just enough to hold the sensor body from moving.
f) Release the inching pedal.
g) Slightly loosen the upper mounting screw (3). Loosen the lower screw (4) only if necessary.
h) Without sliding the sensor body, rotate the sensor until the PWM duty cycle is between 85% and 90%.

- Rotating the sensor body clockwise will increase the upper duty cycle.
- Rotating the sensor body counterclockwise will decrease the upper duty cycle.

i) Retighten the mounting screws enough to hold the sensor body from moving.
j) Depress and release the inching pedal to confirm the results.

Result

- Both upper and lower duty cycles are within their respective limits.

  Fully tighten both sensor mounting screws.

  Perform the sensor calibration procedure to set the new limits in the transmission module.

  See step 3 to calibrate the sensor.
- Either of the upper or lower duty cycles are outside of their limits.

  Repeat the procedure to fine-tune the limits as necessary.

3. Perform the inching pedal calibration.
a) Make sure the sensor mounting screws are fully tightened.
b) Turn the key start switch to the on position.
c) Wait for the armrest display to boot to the home screen.
d) Slowly push in and release the inching pedal three to five times.
e) See step 4 to validate the repairs.

4. Check if the diagnostic code remains.
a) Turn the battery disconnect switch to the on position.
b) Turn the key start switch to the on position.
c) Operate the machine at low idle.
d) Check if the diagnostic code remains.

Result

- SPN 684 FMI 00 is not active.

  Stop.
- SPN 684 FMI 00 is active.

  Failure of the transmission module is possible but not common. Exit the procedure and do the procedure again. If the diagnostic code remains active, replace the module.

  Stop.

10.6.39.1 Inching pedal switch

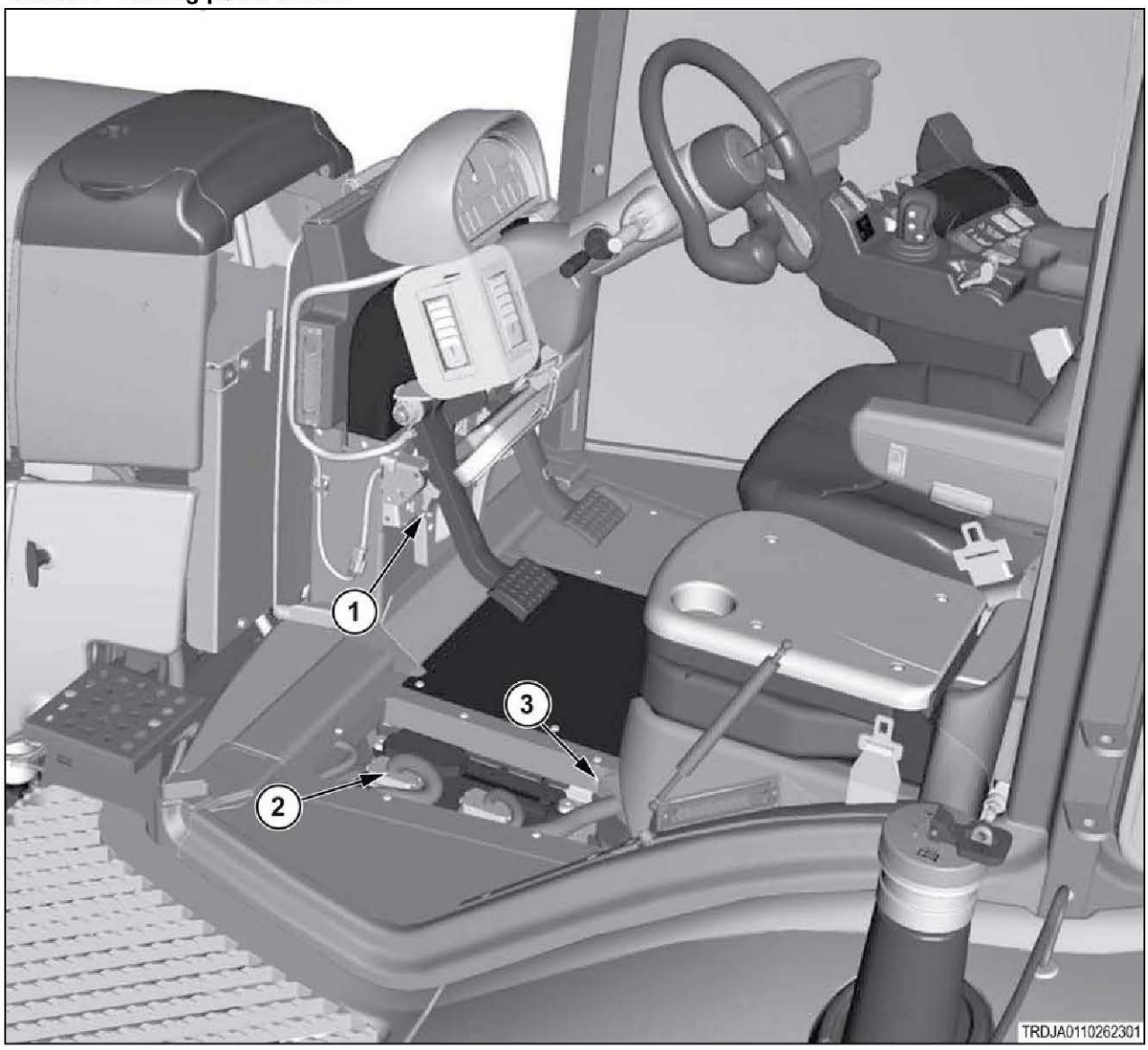

Fig. 179

(1)	Inching pedal switch
(2)	Transmission module
(3)	Chassis to transmission harness connectors

10.6.39.2 Inching pedal electrical schematic

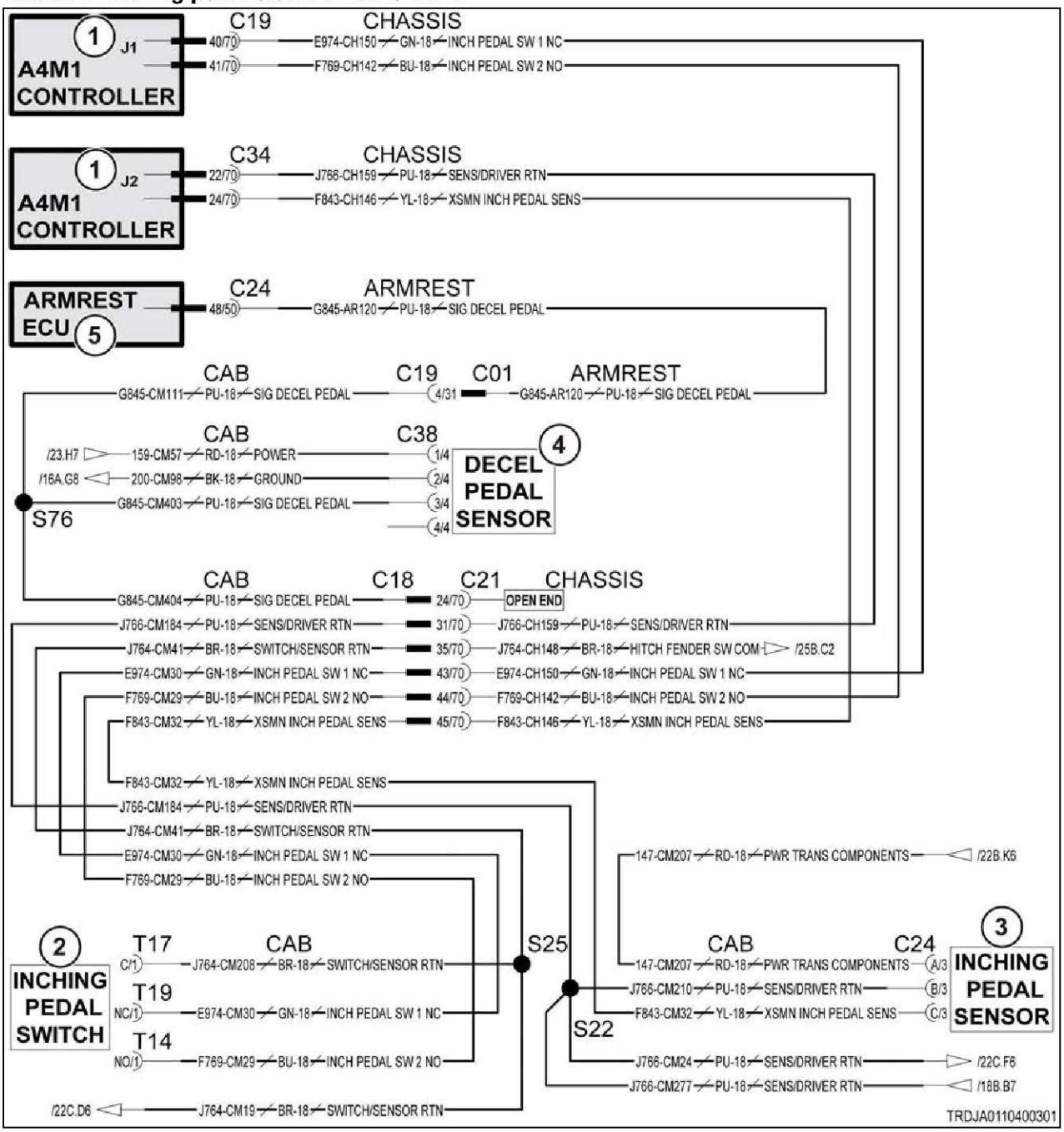

Fig. 180

Schematic legend		
Item	**Schematic term**	**Description**
1	A4M1 CONT	Transmission module
2	INCHING PEDAL SWITCH	Inching pedal switch
3	INCHING PEDAL SENSOR	Inching pedal sensor
4	DECEL PEDAL SENSOR	Decelerator pedal sensor
5	ARMREST ECU	Armrest module
--	XMSN INCH PEDAL SENS	Transmission inching pedal sensor

Schematic legend		
Item	Schematic term	Description
--	HITCH FENDER SW COM	Hitch fender switch common
--	SENS/DRIVER RTN	Sensor/driver return
--	INCH PEDAL SW 1 NC	Inching pedal switch 1 normally closed
--	INCH PEDAL SW 2 NO	Inching pedal switch 2 normally open
--	SIG DECEL PEDAL	Signal deceleration pedal
--	SWITCH/SENSOR RTN	Switch/sensor return
--	PWR TRANS COMPONENTS	Power transmission components

10.6.40 Code SA 03 SPN 684 FMI 01

The module detects that the inching pedal position sensor voltage is below normal.

The transmission module is detecting the voltage produced by the inching pedal sensor is too low. The position sensor uses Pulse Width Modulation (PWM) to simulate varying voltages by rapidly turning the output signal on and off. The duty cycle of this switching determines the "effective" voltage produced by the sensor. The likely cause of the fault is the inching pedal sensor is misadjusted and the duty cycle is too low.

- (1) Inching pedal.
- (2) Inching pedal position sensor.
- (3) Upper mounting screw.
- (4) Lower mounting screw.

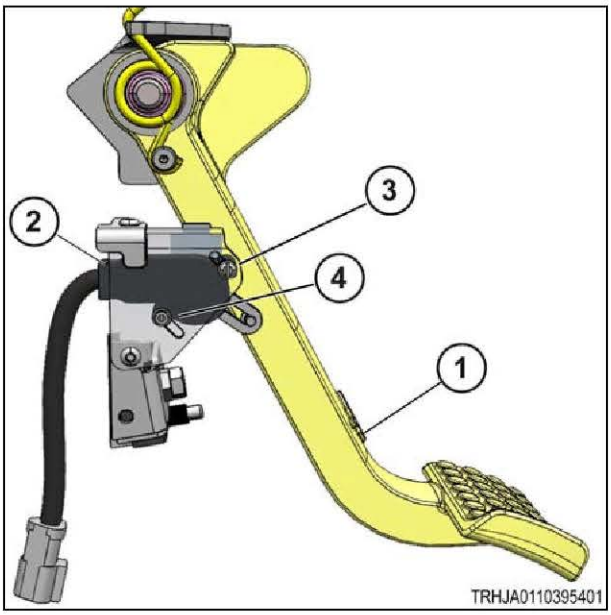

Fig. 181

Diagnosis and solution

1. Check the inching pedal duty cycle.

a) Turn the key start switch to the off position.
b) Turn the battery disconnect switch to the off position.
c) Connect CAT electronic technician to the CAT electronic technician service connector.
d) Turn the battery disconnect switch to the on position.
e) Turn the key start switch to the on position.
f) Monitor the duty cycle of the inching pedal sensor as the pedal is moved.
g) Fully depress and then fully release the inching pedal.

Result

Expected result -

When the inching pedal is fully depressed the duty cycle should be between10% and 14%.

When the inching pedal is released the duty cycle should be between 85% and 90%.

Results:

- The inching pedal sensor's duty cycle is within range for both depressed and released positions.

  The mechanical position of the sensor is correct.

  Perform the calibration procedure to set the duty cycle limits in the transmission module.

  See step 3 to calibrate the sensor.
- The inching pedal sensor's duty cycle is out of range for either depressed or released positions.

  See step 2 to adjust the inching pedal sensor's mechanical position.

2. Perform the inching pedal mechanical position adjustment.

a) Make sure the machine is still running, and the CAT diagnostic module is still connected.
b) Fully depress the inching pedal, and block the pedal in the depressed position.
c) Loosen both sensor mounting screws (3 & 4).
d) Without rotating the sensor body, slide the sensor up or down as necessary until the PWM duty cycle is between 10% and 14%.

- Raising the sensor body will increase the lower duty cycle.
- Lowering the sensor body will decrease the lower duty cycle.

e) Retighten the mounting screws just enough to hold the sensor body from moving.
f) Release the inching pedal.
g) Slightly loosen the upper mounting screw (3). Loosen the lower screw (4) only if necessary.
h) Without sliding the sensor body, rotate the sensor until the PWM duty cycle is between 85% and 90%.

- Rotating the sensor body clockwise will increase the upper duty cycle.
- Rotating the sensor body counterclockwise will decrease the upper duty cycle.

i) Retighten the mounting screws enough to hold the sensor body from moving.
j) Depress and release the inching pedal to confirm the results.

Result

- Both upper and lower duty cycles are within their respective limits.

  Fully tighten both sensor mounting screws.

  Perform the sensor calibration procedure to set the new limits in the transmission module.

  See step 3 to calibrate the sensor.
- Either of the upper or lower duty cycles are outside of their limits.

  Repeat the procedure to fine-tune the limits as necessary.

3. Perform the inching pedal calibration.

a) Make sure the sensor mounting screws are fully tightened.
b) Turn the key start switch to the on position.
c) Wait for the armrest display to boot to the home screen.
d) Slowly push in and release the inching pedal three to five times.
e) See step 4 to validate the repairs.

4. Check if the diagnostic code remains.

a) Turn the battery disconnect switch to the on position.
b) Turn the key start switch to the on position.
c) Operate the machine at low idle.
d) Check if the diagnostic code remains.

Result

- SPN 684 FMI 01 is not active.

  Stop.
- SPN 684 FMI 01 is active.

  Failure of the transmission module is possible but not common. Exit the procedure and do the procedure again. If the diagnostic code remains active, replace the module.

  Stop.

10.6.40.1 Inching pedal switch

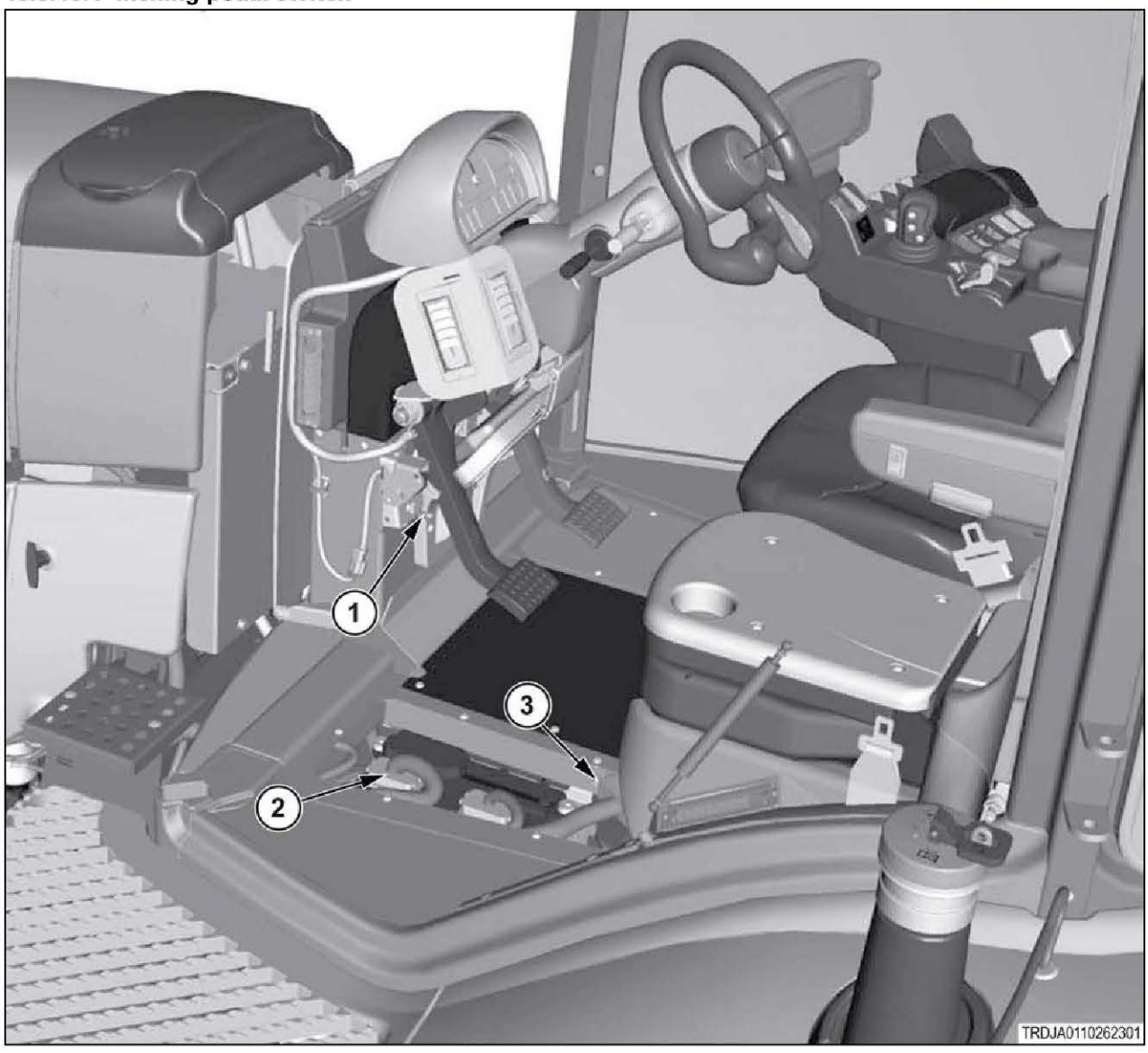

Fig. 182

(1)	Inching pedal switch
(2)	Transmission module
(3)	Chassis to transmission harness connectors

10.6.40.2 Inching pedal electrical schematic

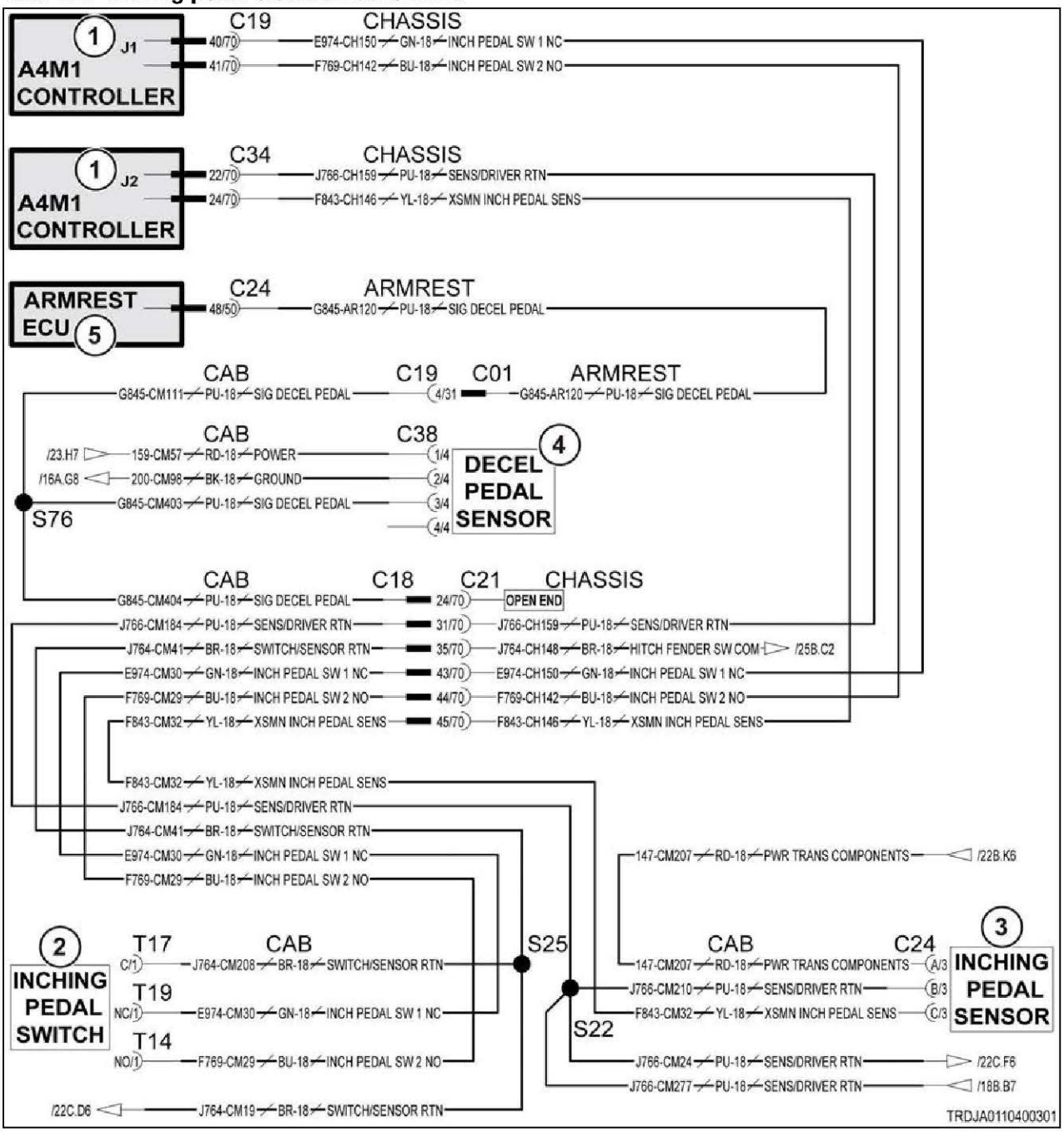

Fig. 183

Schematic legend		
Item	**Schematic term**	**Description**
1	A4M1 CONT	Transmission module
2	INCHING PEDAL SWITCH	Inching pedal switch
3	INCHING PEDAL SENSOR	Inching pedal sensor
4	DECEL PEDAL SENSOR	Decelerator pedal sensor
5	ARMREST ECU	Armrest module
--	XMSN INCH PEDAL SENS	Transmission inching pedal sensor

Schematic legend		
Item	Schematic term	Description
--	HITCH FENDER SW COM	Hitch fender switch common
--	SENS/DRIVER RTN	Sensor/driver return
--	INCH PEDAL SW 1 NC	Inching pedal switch 1 normally closed
--	INCH PEDAL SW 2 NO	Inching pedal switch 2 normally open
--	SIG DECEL PEDAL	Signal deceleration pedal
--	SWITCH/SENSOR RTN	Switch/sensor return
--	PWR TRANS COMPONENTS	Power transmission components

10.6.41 Code SA 03 SPN 684 FMI 08

The module detects that the inching pedal position sensor signal is not within normal range.

The transmission module is detecting abnormal frequency or pulses from the inching pedal sensor. The position sensor uses Pulse Width Modulation (PWM) to simulate varying voltages by rapidly turning the output signal on and off. Either the carrier frequency or modulated frequency are erratic. The likely cause of the fault is a loose connection or the inching pedal sensor is bad.

- (1) Inching pedal.
- (2) Inching pedal position sensor.
- (3) Upper mounting screw.
- (4) Lower mounting screw.

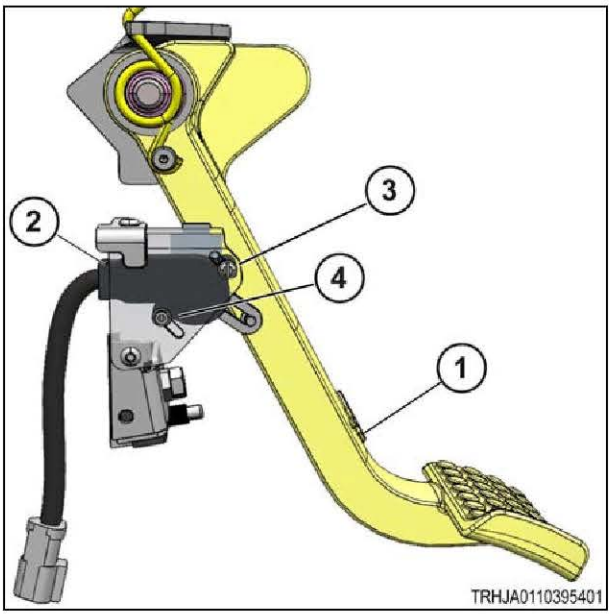

Fig. 184

Diagnosis and solution

1. Determine when the error condition occurs.

a) As necessary, operate the machine and the inching pedal.

b) Determine if the error condition is continuous or only under specific conditions.

Result

- The error is reported continuously and regardless whether the inching pedal is depressed or released.

  The likely cause is a loose connection or faulty sensor.

  See step 2 to inspect the connections.
- The error is reported only when the inching pedal is moved from one position to another, but not when held stationary.

  The most likely cause is the position sensor mounting screws are loose.

  Adjust the sensor's mechanical position.

  See step 3 to adjust the sensor position.

- Reporting of the error appears to be dependant on the position or movement of the inching pedal.

  The most likely cause is a faulty position sensor.

  Replace the sensor.

  Adjust the sensor's mechanical position.

  See step 3 to adjust the sensor position.

2. Inspect all harness and sensor connections.

a) Turn the key start switch to the off position.
b) Turn the battery disconnect switch to the off position.
c) Inspect and clean all connectors and connector contacts:

- Look for bent or worn pins.
- Look for deformed or oversized sockets.
- Look for corrosion on the pins and sockets. Corrosion is a sign of a loose connection.
- Look for signs of overheating. Overheating is a sign of a poor connection, and can further loosen the pin or socket mount. The whole connector body should be replaced.

d) Make sure to inspect the following connector locations:

- Fuse Block 2, contact C2.
- Cab harness to chassis harness connector (C18 & C32), contacts 31 and 45.
- Inching pedal sensor connector.
- Transmission module J2 connector, contacts 22 and 24.

e) Repair or replace any connector or harness found faulty.
f) Verify the repairs by operating the machine and inching pedal.

Result

- The error code cleared.

  Stop.
- The error code persists.

  Replace the inching pedal sensor.

  Adjust the sensor's mechanical position.

  See step 3 to adjust the sensor position.

3. Perform the inching pedal mechanical position adjustment.

a) Turn the key start switch to the off position.
b) Turn the battery disconnect switch to the off position.
c) Connect CAT electronic technician to the CAT electronic technician service connector.
d) Turn the battery disconnect switch to the on position.
e) Turn the key start switch to the on position.
f) Use the CAT diagnostic tool to monitor the inching pedal sensor PWM duty cycle.
g) Fully depress the inching pedal, and block the pedal in the depressed position.
h) Loosen both sensor mounting screws (3 & 4).
i) Without rotating the sensor body, slide the sensor up or down as necessary until the PWM duty cycle is between 10% and 14%.

- Raising the sensor body will increase the lower duty cycle.
- Lowering the sensor body will decrease the lower duty cycle.

j) Retighten the mounting screws just enough to hold the sensor body from moving.
k) Release the inching pedal.
l) Slightly loosen the upper mounting screw (3). Loosen the lower screw (4) only if necessary.
m) Without sliding the sensor body, rotate the sensor until the PWM duty cycle is between 85% and 90%.

- Rotating the sensor body clockwise will increase the upper duty cycle.
- Rotating the sensor body counterclockwise will decrease the upper duty cycle.

n) Retighten the mounting screws enough to hold the sensor body from moving.
o) Depress and release the inching pedal to confirm the results.

Result

- Both upper and lower duty cycles are within their respective limits.

  Fully tighten both sensor mounting screws.

  Perform the sensor calibration procedure to set the new limits in the transmission module.

  See step 4 to calibrate the sensor.
- Either of the upper or lower duty cycles are outside of their limits.

  Repeat the procedure to fine-tune the limits as necessary.

4. Perform the inching pedal calibration.
a) Make sure the sensor mounting screws are fully tightened.
b) Turn the key start switch to the on position.
c) Wait for the armrest display to boot to the home screen.
d) Slowly push in and release the inching pedal three to five times.
e) See step 5 to validate the repairs.

5. Check if the diagnostic code remains.
a) Turn the battery disconnect switch to the on position.
b) Turn the key start switch to the on position.
c) Operate the machine at low idle.
d) Check if the diagnostic code remains.

Result

- SPN 684 FMI 08 is not active.

  Stop.
- SPN 684 FMI 08 is active.

  Failure of the transmission module is possible but not common. Exit the procedure and do the procedure again. If the diagnostic code remains active, replace the module.

  Stop.

10.6.41.1 Inching pedal switch

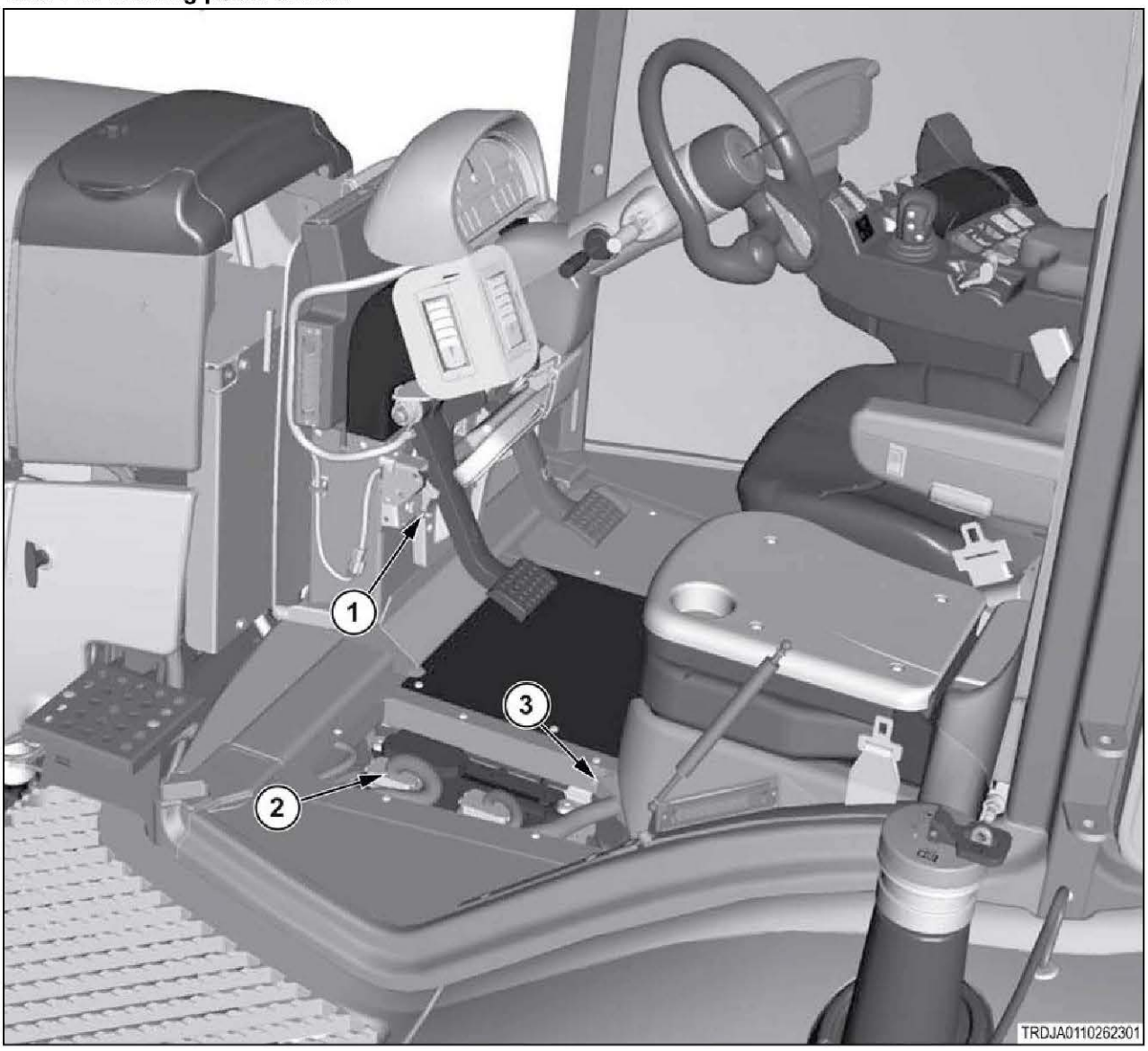

Fig. 185

(1)	Inching pedal switch
(2)	Transmission module
(3)	Chassis to transmission harness connectors

10.6.41.2 Inching pedal electrical schematic

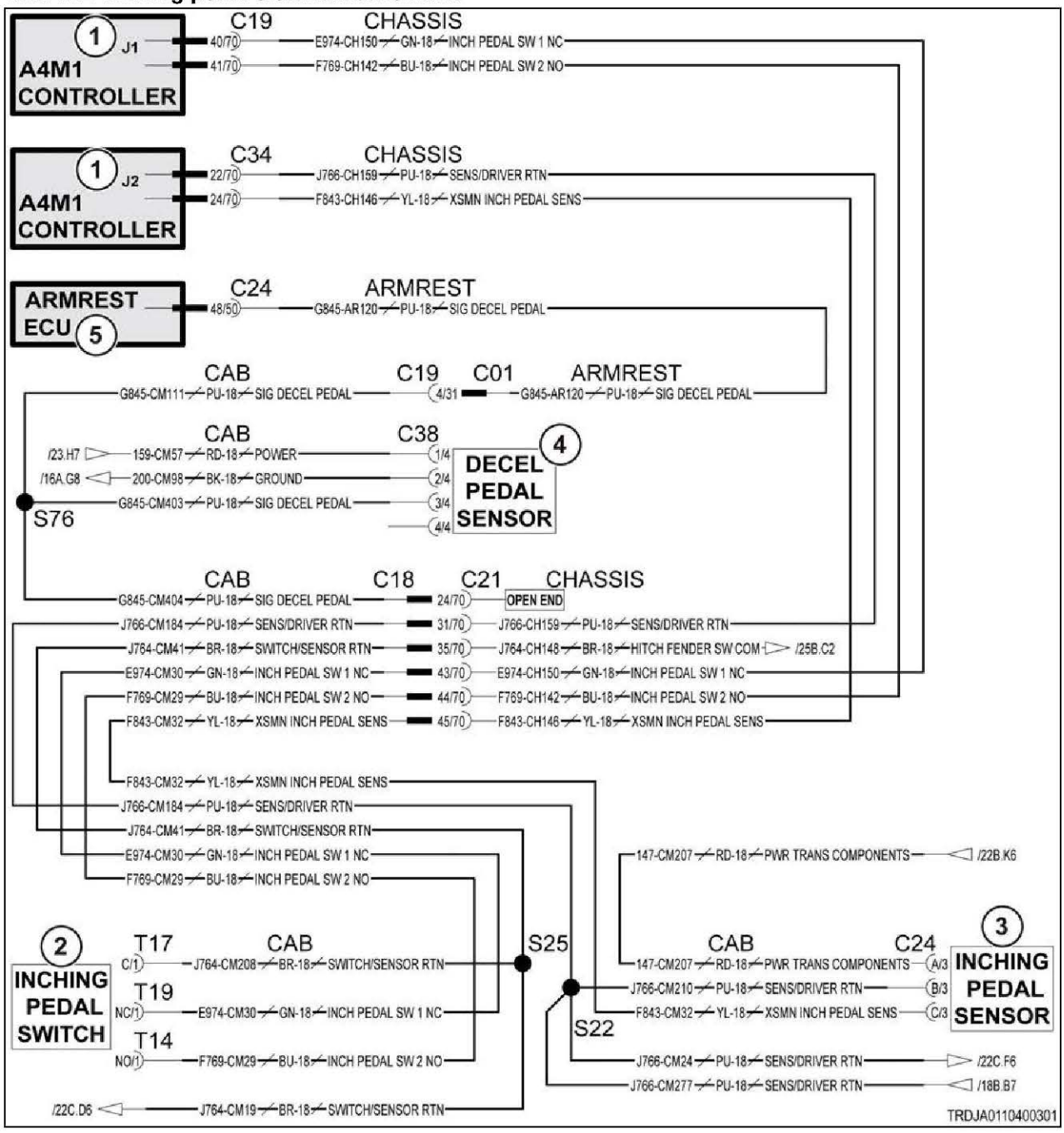

Fig. 186

Schematic legend		
Item	**Schematic term**	**Description**
1	A4M1 CONT	Transmission module
2	INCHING PEDAL SWITCH	Inching pedal switch
3	INCHING PEDAL SENSOR	Inching pedal sensor
4	DECEL PEDAL SENSOR	Decelerator pedal sensor
5	ARMREST ECU	Armrest module
--	XMSN INCH PEDAL SENS	Transmission inching pedal sensor

Schematic legend		
Item	Schematic term	Description
--	HITCH FENDER SW COM	Hitch fender switch common
--	SENS/DRIVER RTN	Sensor/driver return
--	INCH PEDAL SW 1 NC	Inching pedal switch 1 normally closed
--	INCH PEDAL SW 2 NO	Inching pedal switch 2 normally open
--	SIG DECEL PEDAL	Signal deceleration pedal
--	SWITCH/SENSOR RTN	Switch/sensor return
--	PWR TRANS COMPONENTS	Power transmission components

10.6.42 Code SA 03 SPN 734 FMI 03

The module detects that the transmission clutch solenoid 1 voltage is above normal.

Diagnosis and solution

1. Check the solenoid circuit for a short to battery power.
a) Turn the key start switch to the off position.
b) Turn the battery disconnect switch to the off position.
c) Disconnect the connector at the solenoid.
d) Disconnect the J1 harness connector from the transmission module.
e) Check resistance from transmission module contact J1-48 to all other J1 contacts.

Result

- All resistance measurements are high (more than 1000 ohms).

  The harness is not shorted.
- One or more resistance is at or near 0 ohms.

  Repair or replace the harness.

2. Check if the diagnostic code remains.
a) Inspect and clean the harness connector contacts.
b) Connect all the connectors.
c) Turn the battery disconnect switch to the on position.
d) Turn the key start switch to the on position.
e) Operate the machine at low idle.
f) Check if the diagnostic code remains.

Result

Expected result - the diagnostic code is not active.

Results:

- Yes - SPN 734 FMI 03 is not active.

  Stop.
- No - SPN 734 FMI 03 is active.

  Failure of the transmission module is possible but not common. Exit the procedure and do the procedure again. If the diagnostic code remains active, replace the module.

  Stop.

10.6.42.1 Transmission clutch solenoid electrical schematic

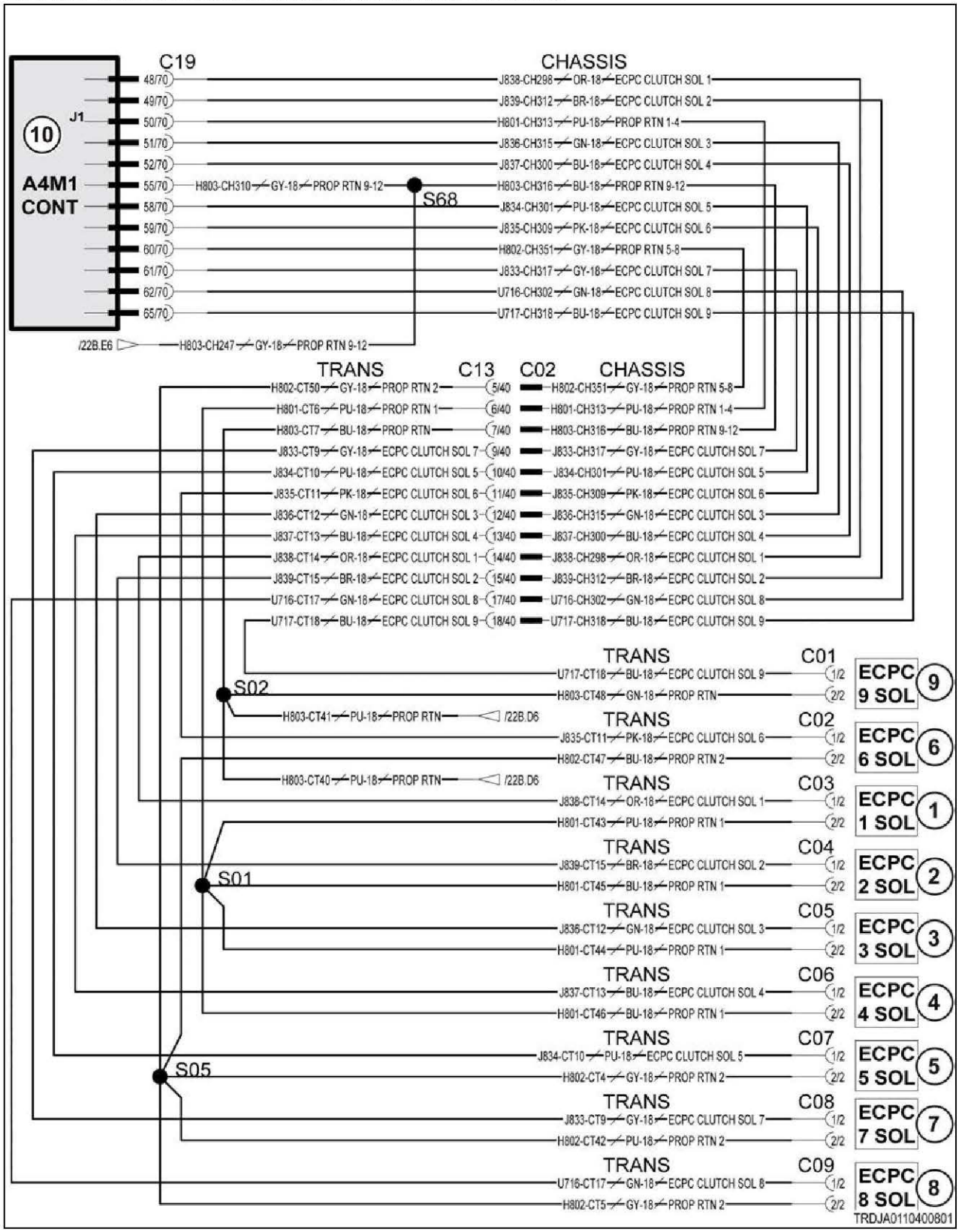

Fig. 187

Schematic legend		
Item	Schematic term	Description
1	ECPC 1 SOL	Electronic clutch pressure control solenoid 1
2	ECPC 2 SOL	Electronic clutch pressure control solenoid 2
3	ECPC 3 SOL	Electronic clutch pressure control solenoid 3
4	ECPC 4 SOL	Electronic clutch pressure control solenoid 4
5	ECPC 5 SOL	Electronic clutch pressure control solenoid 5
6	ECPC 6 SOL	Electronic clutch pressure control solenoid 6
7	ECPC 7 SOL	Electronic clutch pressure control solenoid 7
8	ECPC 8 SOL	Electronic clutch pressure control solenoid 8
9	ECPC 9 SOL	Electronic clutch pressure control solenoid 9
10	A4M1 CONT	Transmission module
--	PROP RTN	Proportional return

10.6.43 Code SA 03 SPN 734 FMI 05

The module detects the current of the transmission clutch solenoid 1 is below normal.

The transmission module has detected an open circuit in the solenoid circuit. The most likely cause is a disconnected solenoid.

Diagnosis and solution

1. Check the solenoid coil resistance.
- a) Turn the key start switch to the off position.
- b) Turn the battery disconnect switch to the off position.
- c) Disconnect the clutch solenoid from the harness.
- d) Check the resistance between contacts 1 and 2 of the solenoid.

Result

- The resistance is between 5 and 10 ohms.

  The solenoid is not the fault.
- The resistance is above 10 ohms.

  Replace the solenoid.

2. Check the harness for an open circuit.
- a) Install a shorting jumper between contacts 1 and 2 of the solenoid connector.
- b) Disconnect the J1 harness connector from the transmission module.
- c) Check the resistance between contacts J1-48 and J1-50 on the transmission module connector.

Result

- The resistance is at or near 0 ohms.

  The harness is not open.

  Remove the shorting jumper.
- The resistance is high (not near 0 ohms).

  Repair or replace the harness.

3. Check if the diagnostic code remains.
- a) Check and clean the harness connector contacts.

b) Connect all the connectors.
c) Turn the battery disconnect switch to the on position.
d) Turn the key start switch to the on position.
e) Operate the machine at low idle.
f) Check if the diagnostic code remains.

Result

Expected result - the diagnostic code is not active.

Results:

- Yes - SPN 734 FMI 05 is not active.

  Stop.
- No - SPN 734 FMI 05 is active.

  Failure of the transmission module is possible but not common. Exit the procedure and do the procedure again. If the diagnostic code remains active, replace the module.

  Stop.

10.6.43.1 Transmission clutch solenoid electrical schematic

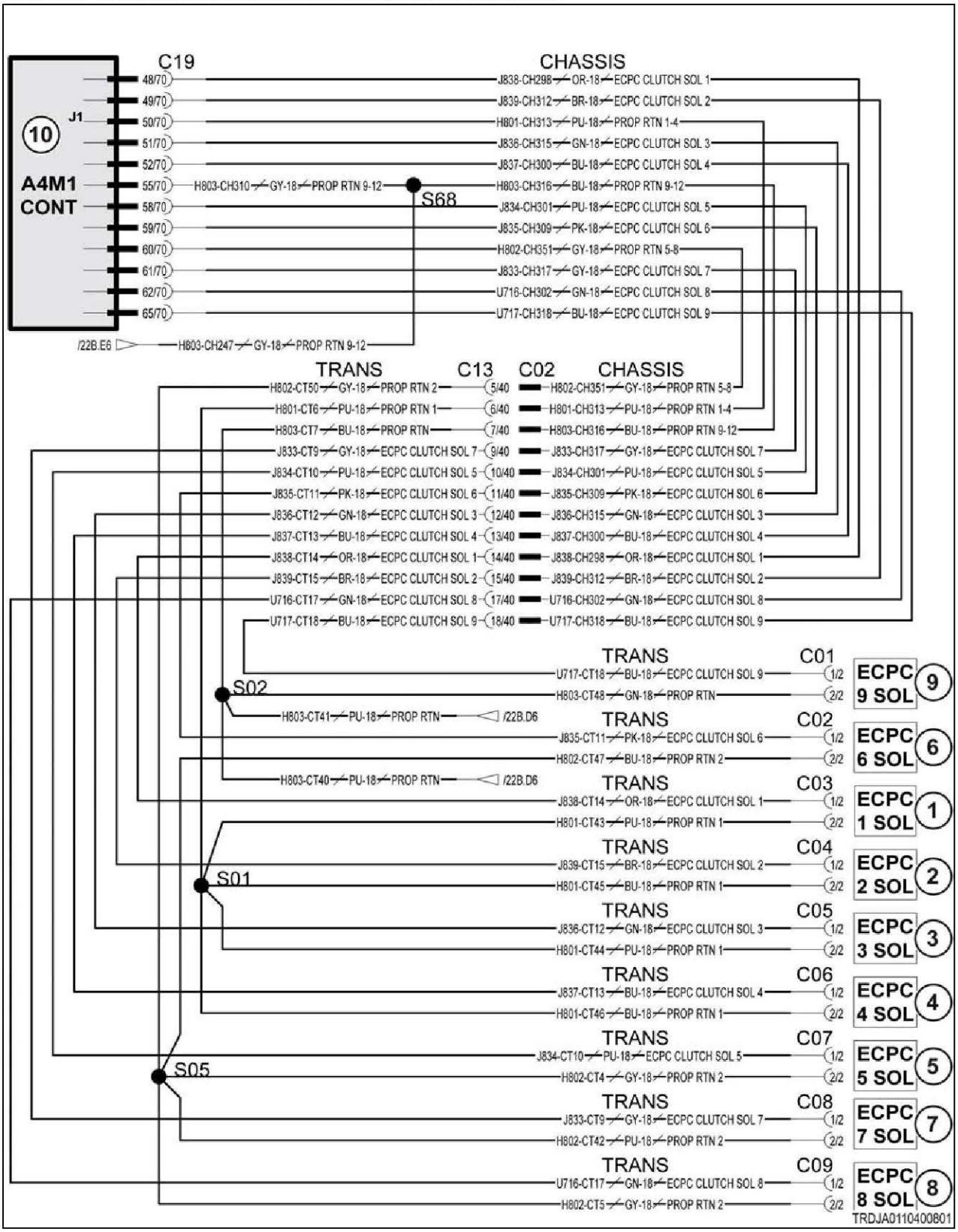

Fig. 188

Schematic legend		
Item	Schematic term	Description
1	ECPC 1 SOL	Electronic clutch pressure control solenoid 1
2	ECPC 2 SOL	Electronic clutch pressure control solenoid 2
3	ECPC 3 SOL	Electronic clutch pressure control solenoid 3
4	ECPC 4 SOL	Electronic clutch pressure control solenoid 4
5	ECPC 5 SOL	Electronic clutch pressure control solenoid 5
6	ECPC 6 SOL	Electronic clutch pressure control solenoid 6
7	ECPC 7 SOL	Electronic clutch pressure control solenoid 7
8	ECPC 8 SOL	Electronic clutch pressure control solenoid 8
9	ECPC 9 SOL	Electronic clutch pressure control solenoid 9
10	A4M1 CONT	Transmission module
--	PROP RTN	Proportional return

10.6.44 Code SA 03 SPN 734 FMI 06

The module detects the current of the transmission clutch solenoid 1 is above normal.

The transmission module has detected excessive current in the solenoid circuit. The most likely cause is a short to ground or faulty solenoid.

Diagnosis and solution

1. Check the solenoid coil resistance.
- a) Turn the key start switch to the off position.
- b) Turn the battery disconnect switch to the off position.
- c) Disconnect the clutch solenoid from the harness.
- d) Check the resistance between contacts 1 and 2 of the solenoid.

Result

- The resistance is between 5 and 10 ohms.

  The solenoid is not the fault.

  Leave the solenoid disconnected.
- The resistance is at or near 0 ohms.

  Replace the solenoid.

2. Check the harness for a short circuit.
- a) Make sure the solenoid is still disconnected from the previous step.
- b) Disconnect J1 connector from the transmission module.
- c) Check the resistance between contacts J1-48 and J1-50 on the transmission module harness connector.

Result

- The resistance measurement is high (more than 1000 ohms).

  The harness is not shorted.
- The resistance is at or near 0 ohms.

  Repair or replace the harness.

3. Check if the diagnostic code remains.

a) Check and clean the harness connector contacts.
b) Connect all the connectors.
c) Turn the battery disconnect switch to the on position.
d) Turn the key start switch to the on position.
e) Operate the machine at low idle.
f) Check if the diagnostic code remains.

Result

Expected result - the diagnostic code is not active.

Results:

- Yes - SPN 734 FMI 06 is not active.

  Stop.
- No - SPN 734 FMI 06 is active.

  Failure of the transmission module is possible but not common. Exit the procedure and do the procedure again. If the diagnostic code remains active, replace the module.

  Stop.

10.6.44.1 Transmission clutch solenoid electrical schematic

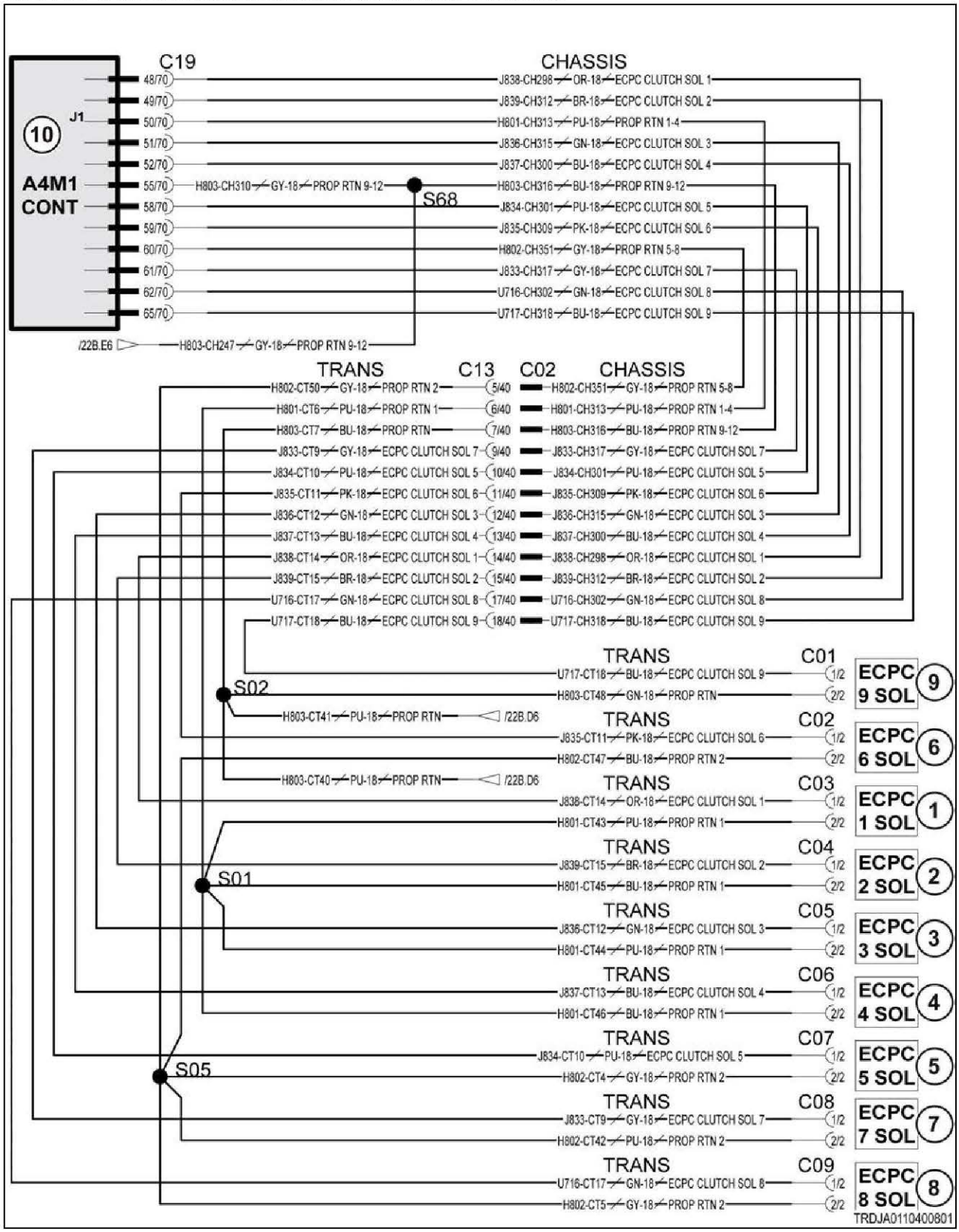

Fig. 189

Schematic legend		
Item	Schematic term	Description
1	ECPC 1 SOL	Electronic clutch pressure control solenoid 1
2	ECPC 2 SOL	Electronic clutch pressure control solenoid 2
3	ECPC 3 SOL	Electronic clutch pressure control solenoid 3
4	ECPC 4 SOL	Electronic clutch pressure control solenoid 4
5	ECPC 5 SOL	Electronic clutch pressure control solenoid 5
6	ECPC 6 SOL	Electronic clutch pressure control solenoid 6
7	ECPC 7 SOL	Electronic clutch pressure control solenoid 7
8	ECPC 8 SOL	Electronic clutch pressure control solenoid 8
9	ECPC 9 SOL	Electronic clutch pressure control solenoid 9
10	A4M1 CONT	Transmission module
--	PROP RTN	Proportional return

10.6.45 Code SA 03 SPN 735 FMI 03

The module detects that the transmission clutch solenoid 2 voltage is above normal.

Diagnosis and solution

1. Check the solenoid circuit for a short to battery power.
a) Turn the key start switch to the off position.
b) Turn the battery disconnect switch to the off position.
c) Disconnect the connector at the solenoid.
d) Disconnect the J1 harness connector from the transmission module.
e) Check resistance from transmission module contact J1-49 to all other J1 contacts.

Result

- All resistance measurements are high (more than 1000 ohms).

  The harness is not shorted.
- One or more resistance is at or near 0 ohms.

  Repair or replace the harness.

2. Check if the diagnostic code remains.
a) Check and clean the harness connector contacts.
b) Connect all the connectors.
c) Turn the battery disconnect switch to the on position.
d) Turn the key start switch to the on position.
e) Operate the machine at low idle.
f) Check if the diagnostic code remains.

Result

Expected result - the diagnostic code is not active.

Results:

- Yes - SPN 735 FMI 03 is not active.

  Stop.

- No - SPN 735 FMI 03 is active.

  Failure of the transmission module is possible but not common. Exit the procedure and do the procedure again. If the diagnostic code remains active, replace the module.

  Stop.

10.6.45.1 Transmission clutch solenoid electrical schematic

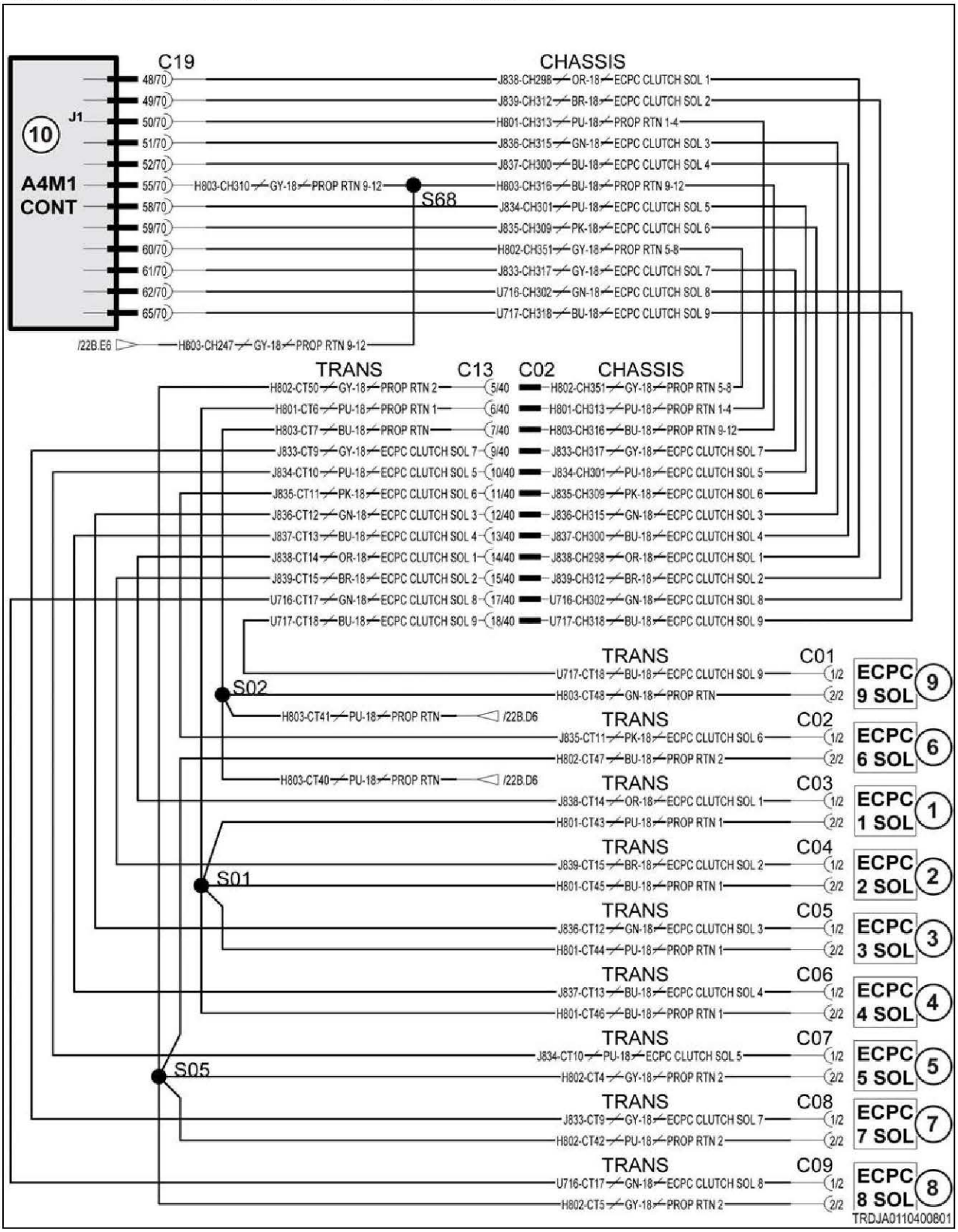

Fig. 190

Schematic legend		
Item	Schematic term	Description
1	ECPC 1 SOL	Electronic clutch pressure control solenoid 1
2	ECPC 2 SOL	Electronic clutch pressure control solenoid 2
3	ECPC 3 SOL	Electronic clutch pressure control solenoid 3
4	ECPC 4 SOL	Electronic clutch pressure control solenoid 4
5	ECPC 5 SOL	Electronic clutch pressure control solenoid 5
6	ECPC 6 SOL	Electronic clutch pressure control solenoid 6
7	ECPC 7 SOL	Electronic clutch pressure control solenoid 7
8	ECPC 8 SOL	Electronic clutch pressure control solenoid 8
9	ECPC 9 SOL	Electronic clutch pressure control solenoid 9
10	A4M1 CONT	Transmission module
--	PROP RTN	Proportional return

10.6.46 Code SA 03 SPN 735 FMI 05

The module detects that the transmission clutch solenoid 2 current is below normal.

The transmission module has detected an open circuit in the solenoid circuit. The most likely cause is a disconnected solenoid.

Diagnosis and solution

1. Check the solenoid coil resistance.
   a) Turn the key start switch to the off position.
   b) Turn the battery disconnect switch to the off position.
   c) Disconnect the clutch solenoid from the harness.
   d) Check the resistance between contacts 1 and 2 of the solenoid.

   Result

   - The resistance is between 5 and 10 ohms.

     The solenoid is not the fault.
   - The resistance is above 10 ohms.

     Replace the solenoid.

2. Check the harness for an open circuit.
   a) Install a shorting jumper between contacts 1 and 2 of the solenoid connector.
   b) Disconnect the J1 harness connector from the transmission module.
   c) Check the resistance between contacts J1-49 and J1-50 on the transmission module connector.

   Result

   - The resistance is at or near 0 ohms.

     The harness is not open.

     Remove the shorting jumper.
   - The resistance is high (not near 0 ohms).

     Repair or replace the harness.

3. Check if the diagnostic code remains.
   a) Check and clean the harness connector contacts.

b) Connect all the connectors.
c) Turn the battery disconnect switch to the on position.
d) Turn the key start switch to the on position.
e) Operate the machine at low idle.
f) Check if the diagnostic code remains.

Result

Expected result - the diagnostic code is not active.

Results:

- Yes - SPN 735 FMI 05 is not active.

  Stop.
- No - SPN 735 FMI 05 is active.

  Failure of the transmission module is possible but not common. Exit the procedure and do the procedure again. If the diagnostic code remains active, replace the module.

  Stop.

10.6.46.1 Transmission clutch solenoid electrical schematic

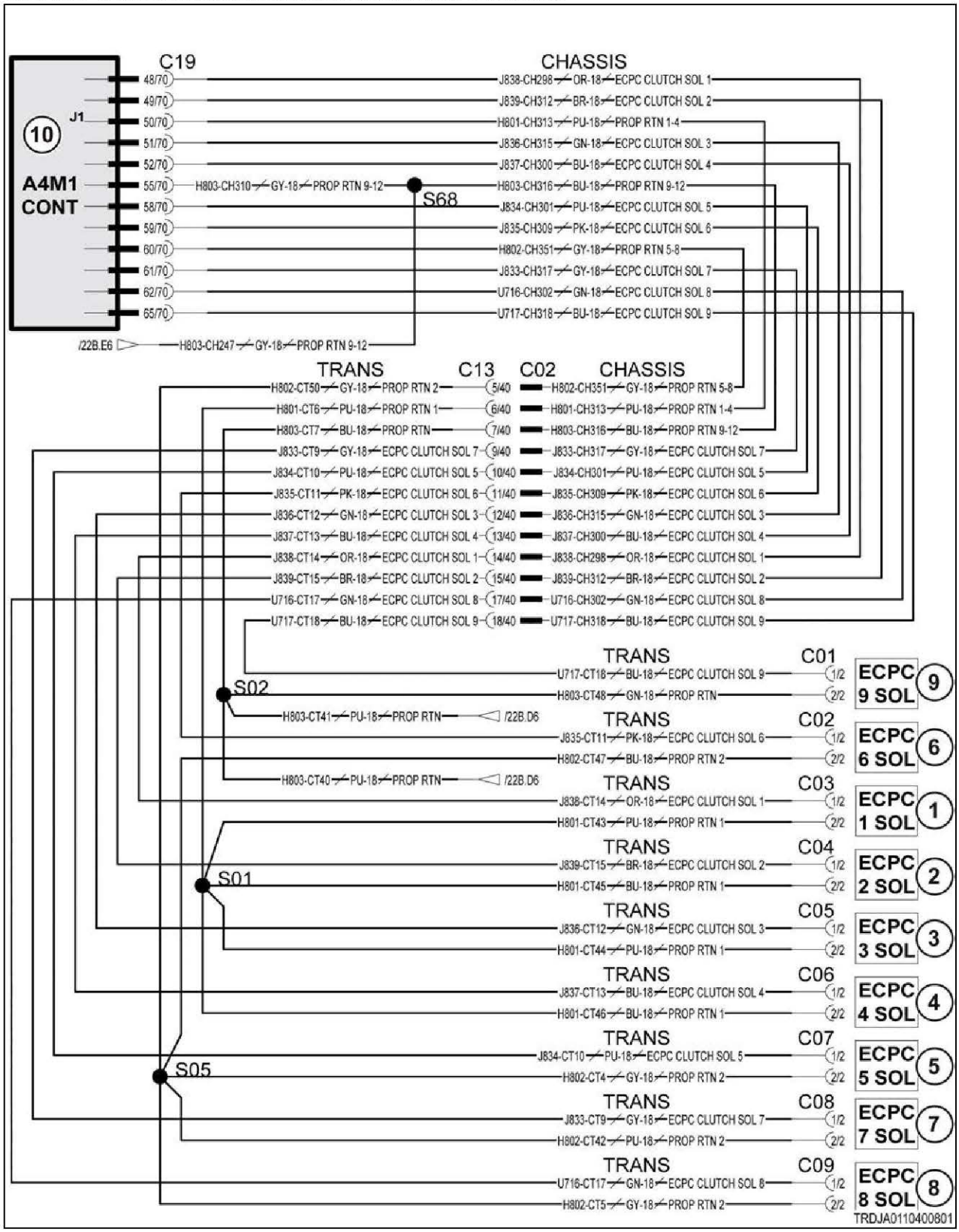

Fig. 191

Schematic legend		
Item	Schematic term	Description
1	ECPC 1 SOL	Electronic clutch pressure control solenoid 1
2	ECPC 2 SOL	Electronic clutch pressure control solenoid 2
3	ECPC 3 SOL	Electronic clutch pressure control solenoid 3
4	ECPC 4 SOL	Electronic clutch pressure control solenoid 4
5	ECPC 5 SOL	Electronic clutch pressure control solenoid 5
6	ECPC 6 SOL	Electronic clutch pressure control solenoid 6
7	ECPC 7 SOL	Electronic clutch pressure control solenoid 7
8	ECPC 8 SOL	Electronic clutch pressure control solenoid 8
9	ECPC 9 SOL	Electronic clutch pressure control solenoid 9
10	A4M1 CONT	Transmission module
--	PROP RTN	Proportional return

10.6.47 Code SA 03 SPN 735 FMI 06

The module detects that the transmission clutch solenoid 2 current is above normal.

The transmission module has detected excessive current in the solenoid circuit. The most likely cause is a short to ground or faulty solenoid.

Diagnosis and solution

1. Check the solenoid coil resistance.
- a) Turn the key start switch to the off position.
- b) Turn the battery disconnect switch to the off position.
- c) Disconnect the clutch solenoid from the harness.
- d) Check the resistance between contacts 1 and 2 of the solenoid.

Result

- The resistance is between 5 and 10 ohms.

  The solenoid is not the fault.

  Leave the solenoid disconnected.
- The resistance is at or near 0 ohms.

  Replace the solenoid.

2. Check the harness for a short circuit.
- a) Make sure the solenoid is still disconnected from the previous step.
- b) Disconnect J1 connector from the transmission module.
- c) Check the resistance between contacts J1-49 and J1-50 on the transmission module harness connector.

Result

- The resistance measurement is high (more than 1000 ohms).

  The harness is not shorted.
- The resistance is at or near 0 ohms.

  Repair or replace the harness.

3. Check if the diagnostic code remains.

a) Check and clean the harness connector contacts.
b) Connect all the connectors.
c) Turn the battery disconnect switch to the on position.
d) Turn the key start switch to the on position.
e) Operate the machine at low idle.
f) Check if the diagnostic code remains.

Result

Expected result - the diagnostic code is not active.

Results:

- Yes - SPN 735 FMI 06 is not active.

  Stop.
- No - SPN 735 FMI 06 is active.

  Failure of the transmission module is possible but not common. Exit the procedure and do the procedure again. If the diagnostic code remains active, replace the module.

  Stop.

10.6.47.1 Transmission clutch solenoid electrical schematic

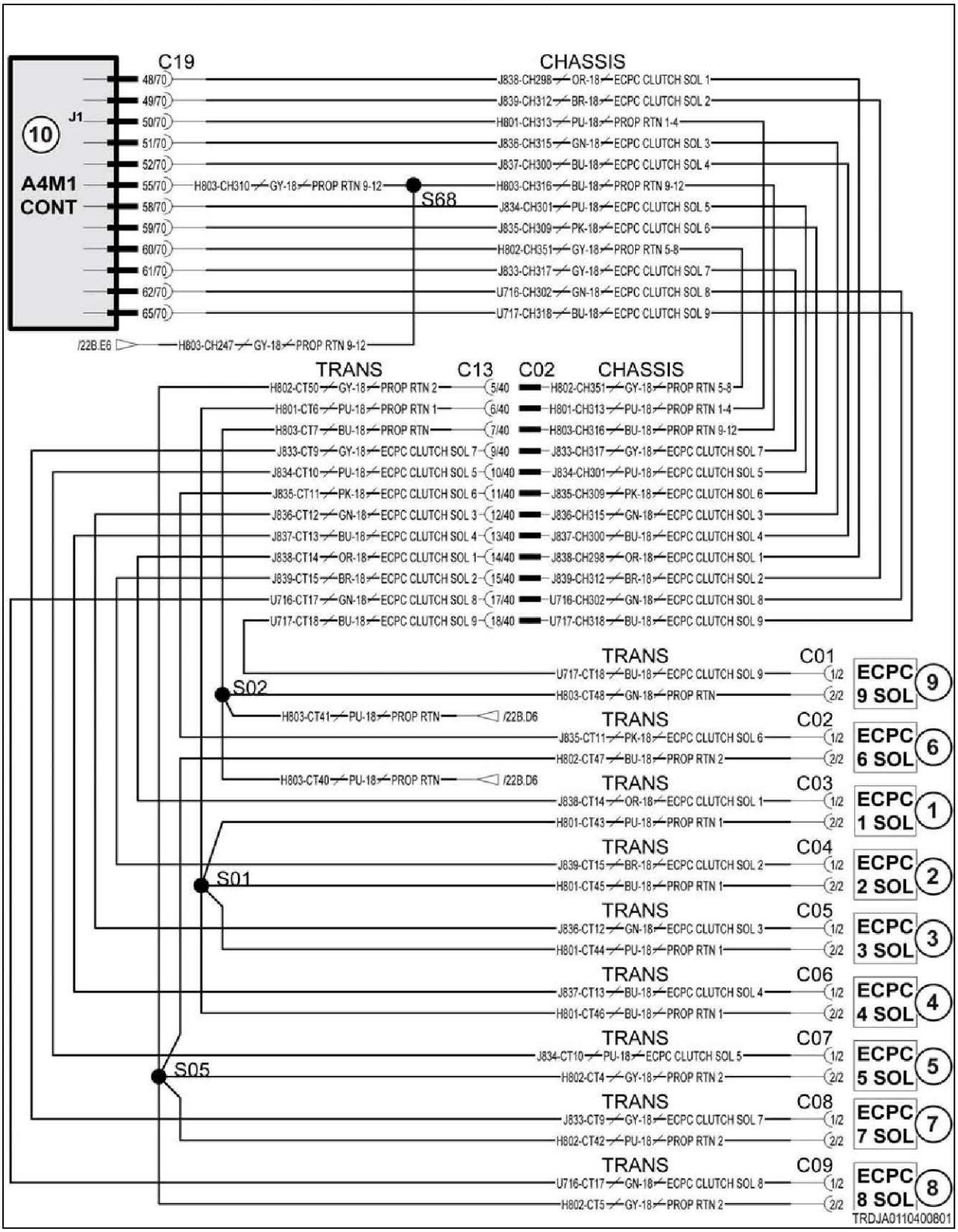

Fig. 192

Schematic legend		
Item	Schematic term	Description
1	ECPC 1 SOL	Electronic clutch pressure control solenoid 1
2	ECPC 2 SOL	Electronic clutch pressure control solenoid 2
3	ECPC 3 SOL	Electronic clutch pressure control solenoid 3
4	ECPC 4 SOL	Electronic clutch pressure control solenoid 4
5	ECPC 5 SOL	Electronic clutch pressure control solenoid 5
6	ECPC 6 SOL	Electronic clutch pressure control solenoid 6
7	ECPC 7 SOL	Electronic clutch pressure control solenoid 7
8	ECPC 8 SOL	Electronic clutch pressure control solenoid 8
9	ECPC 9 SOL	Electronic clutch pressure control solenoid 9
10	A4M1 CONT	Transmission module
--	PROP RTN	Proportional return

10.6.48 Code SA 03 SPN 736 FMI 03

The module detects that the transmission clutch solenoid 3 voltage is above normal.

Diagnosis and solution

1. Check the solenoid circuit for a short to battery power.
a) Turn the key start switch to the off position.
b) Turn the battery disconnect switch to the off position.
c) Disconnect the connector at the solenoid.
d) Disconnect the J1 harness connector from the transmission module.
e) Check resistance from transmission module contact J1-51 to all other J1 contacts.

Result

Expected result - each resistance is more than 5000 ohms.

Results:

- All resistance measurements are high (more than 1000 ohms).

  The harness is not shorted.
- One or more resistance is at or near 0 ohms.

  Repair or replace the harness.

2. Check if the diagnostic code remains.
a) Inspect and clean the harness connector contacts.
b) Connect all the connectors.
c) Turn the battery disconnect switch to the on position.
d) Turn the key start switch to the on position.
e) Operate the machine at low idle.
f) Check if the diagnostic code remains.

Result

Expected result - the diagnostic code is not active.

Results:

- Yes - SPN 736 FMI 03 is not active.

  Stop.
- No - SPN 736 FMI 03 is active.

  Failure of the transmission module is possible but not common. Exit the procedure and do the procedure again. If the diagnostic code remains active, replace the module.

  Stop.

10.6.48.1 Transmission clutch solenoid electrical schematic

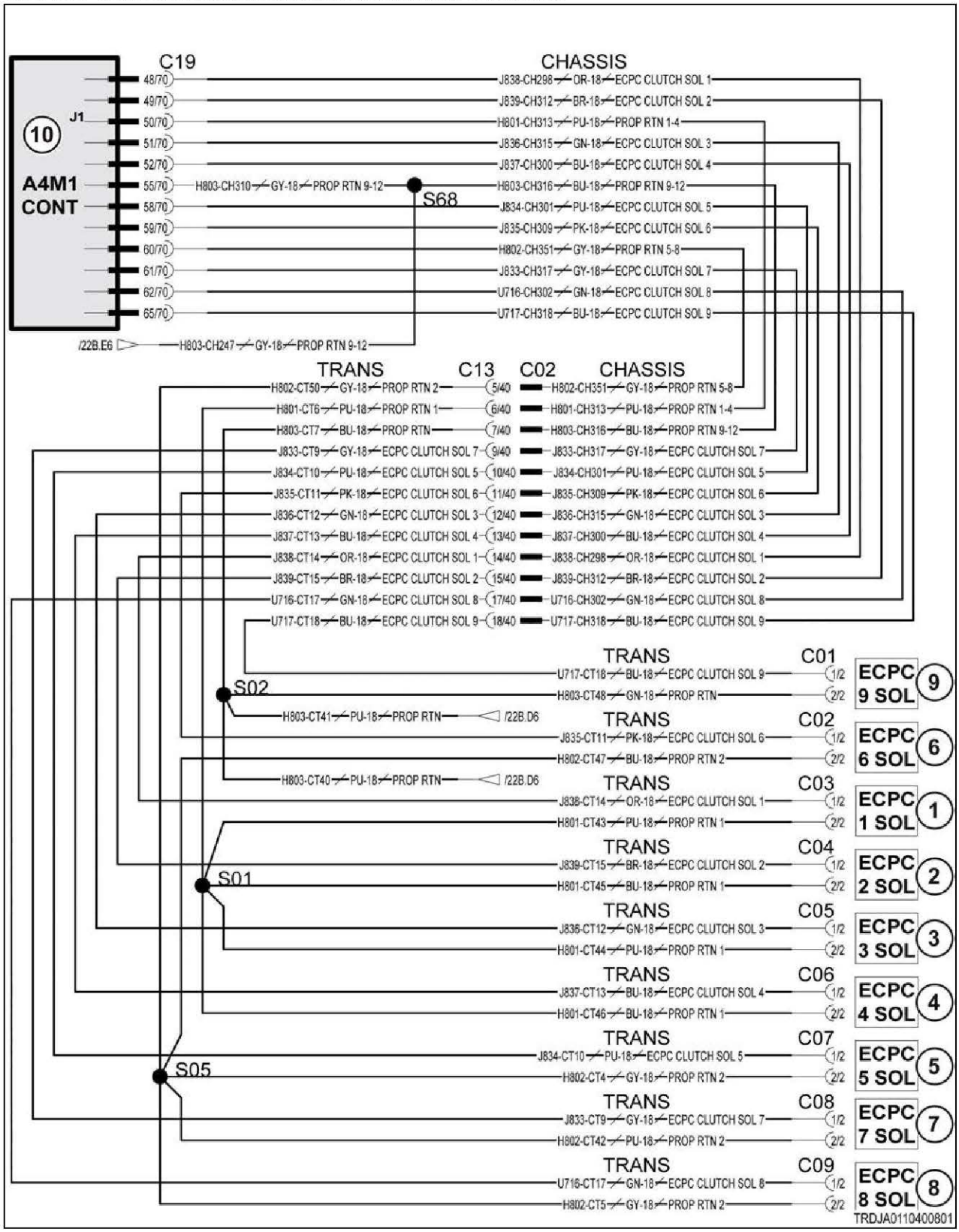

Fig. 193

Schematic legend		
Item	Schematic term	Description
1	ECPC 1 SOL	Electronic clutch pressure control solenoid 1
2	ECPC 2 SOL	Electronic clutch pressure control solenoid 2
3	ECPC 3 SOL	Electronic clutch pressure control solenoid 3
4	ECPC 4 SOL	Electronic clutch pressure control solenoid 4
5	ECPC 5 SOL	Electronic clutch pressure control solenoid 5
6	ECPC 6 SOL	Electronic clutch pressure control solenoid 6
7	ECPC 7 SOL	Electronic clutch pressure control solenoid 7
8	ECPC 8 SOL	Electronic clutch pressure control solenoid 8
9	ECPC 9 SOL	Electronic clutch pressure control solenoid 9
10	A4M1 CONT	Transmission module
--	PROP RTN	Proportional return

10.6.49 Code SA 03 SPN 736 FMI 05

The module detects that the transmission clutch solenoid 3 current is below normal.

The transmission module has detected an open circuit in the solenoid circuit. The most likely cause is a disconnected solenoid.

Diagnosis and solution

1. Check the solenoid coil resistance.
- a) Turn the key start switch to the off position.
- b) Turn the battery disconnect switch to the off position.
- c) Disconnect the clutch solenoid from the harness.
- d) Check the resistance between contacts 1 and 2 of the solenoid.

Result

- The resistance is between 5 and 10 ohms.

  The solenoid is not the fault.
- The resistance is above 10 ohms.

  Replace the solenoid.

2. Check the harness for an open circuit.
- a) Install a shorting jumper between contacts 1 and 2 of the solenoid connector.
- b) Disconnect the J1 harness connector from the transmission module.
- c) Check the resistance between contacts J1-51 and J1-50 on the transmission module connector.

Result

- The resistance is at or near 0 ohms.

  The harness is not open.

  Remove the shorting jumper.
- The resistance is high (not near 0 ohms).

  Repair or replace the harness.

3. Check if the diagnostic code remains.
- a) Check and clean the harness connector contacts.

b) Connect all the connectors.
c) Turn the battery disconnect switch to the on position.
d) Turn the key start switch to the on position.
e) Operate the machine at low idle.
f) Check if the diagnostic code remains.

Result

Expected result - the diagnostic code is not active.

Results:

- Yes - SPN 736 FMI 05 is not active.

  Stop.
- No - SPN 736 FMI 05 is active.

  Failure of the transmission module is possible but not common. Exit the procedure and do the procedure again. If the diagnostic code remains active, replace the module.

  Stop.

10.6.49.1 Transmission clutch solenoid electrical schematic

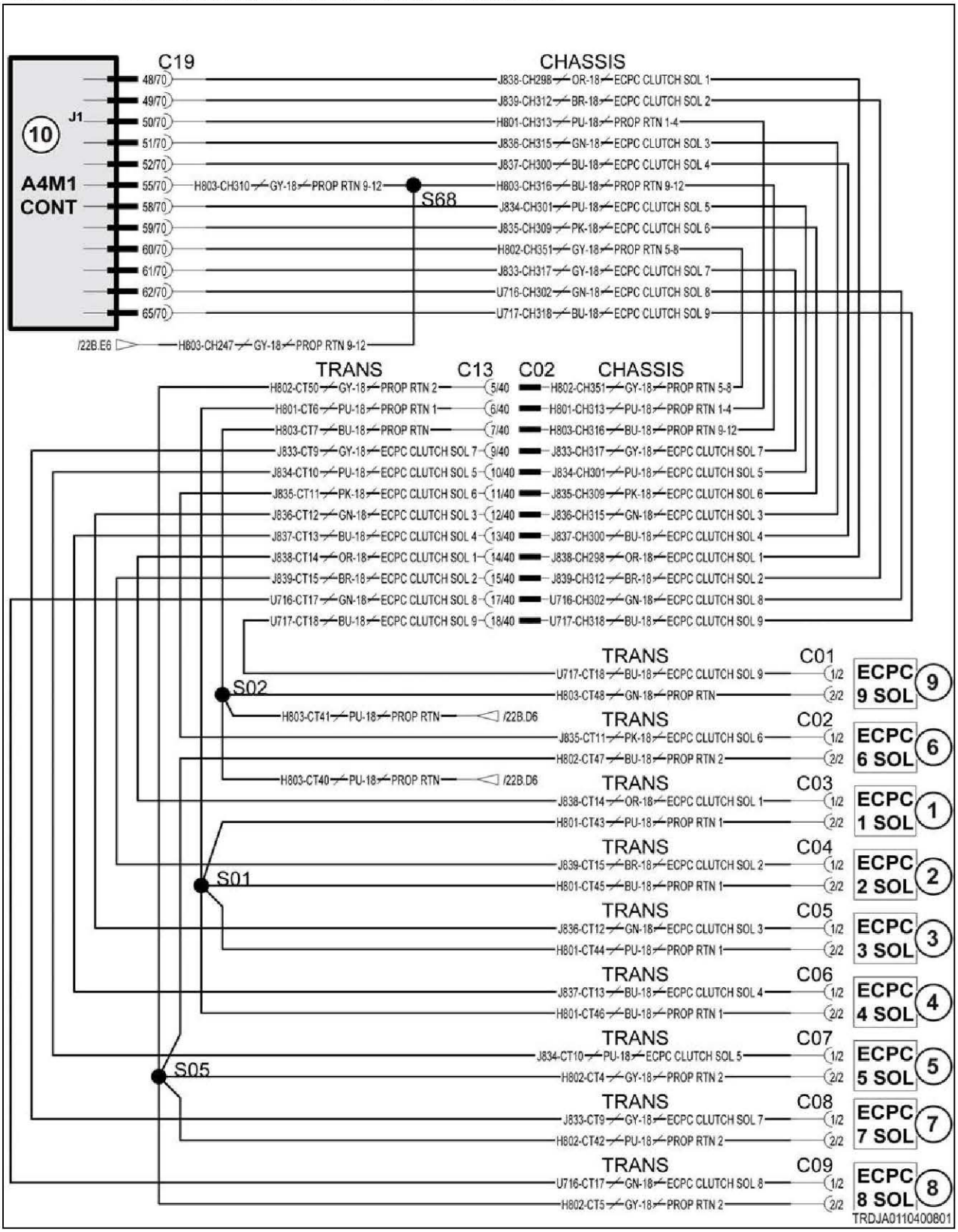

Fig. 194

Schematic legend		
Item	Schematic term	Description
1	ECPC 1 SOL	Electronic clutch pressure control solenoid 1
2	ECPC 2 SOL	Electronic clutch pressure control solenoid 2
3	ECPC 3 SOL	Electronic clutch pressure control solenoid 3
4	ECPC 4 SOL	Electronic clutch pressure control solenoid 4
5	ECPC 5 SOL	Electronic clutch pressure control solenoid 5
6	ECPC 6 SOL	Electronic clutch pressure control solenoid 6
7	ECPC 7 SOL	Electronic clutch pressure control solenoid 7
8	ECPC 8 SOL	Electronic clutch pressure control solenoid 8
9	ECPC 9 SOL	Electronic clutch pressure control solenoid 9
10	A4M1 CONT	Transmission module
--	PROP RTN	Proportional return

10.6.50 Code SA 03 SPN 736 FMI 06

The module detects that the transmission clutch solenoid 3 current is above normal.

The transmission module has detected excessive current in the solenoid circuit. The most likely cause is a short to ground or faulty solenoid.

Diagnosis and solution

1. Check the solenoid coil resistance.
- a) Turn the key start switch to the off position.
- b) Turn the battery disconnect switch to the off position.
- c) Disconnect the clutch solenoid from the harness.
- d) Check the resistance between contacts 1 and 2 of the solenoid.

Result

- The resistance is between 5 and 10 ohms.

  The solenoid is not the fault.

  Leave the solenoid disconnected.
- The resistance is at or near 0 ohms.

  Replace the solenoid.

2. Check the harness for a short circuit.
- a) Make sure the solenoid is still disconnected from the previous step.
- b) Disconnect J1 connector from the transmission module.
- c) Check the resistance between contacts J1-51 and J1-50 on the transmission module harness connector.

Result

- The resistance measurement is high (more than 1000 ohms).

  The harness is not shorted.
- The resistance is at or near 0 ohms.

  Repair or replace the harness.

3. Check if the diagnostic code remains.

a) Check and clean the harness connector contacts.
b) Connect all the connectors.
c) Turn the battery disconnect switch to the on position.
d) Turn the key start switch to the on position.
e) Operate the machine at low idle.
f) Check if the diagnostic code remains.

Result

Expected result - the diagnostic code is not active.

Results:

- Yes - SPN 736 FMI 06 is not active.

  Stop.
- No - SPN 736 FMI 06 is active.

  Failure of the transmission module is possible but not common. Exit the procedure and do the procedure again. If the diagnostic code remains active, replace the module.

  Stop.

10.6.50.1 Transmission clutch solenoid electrical schematic

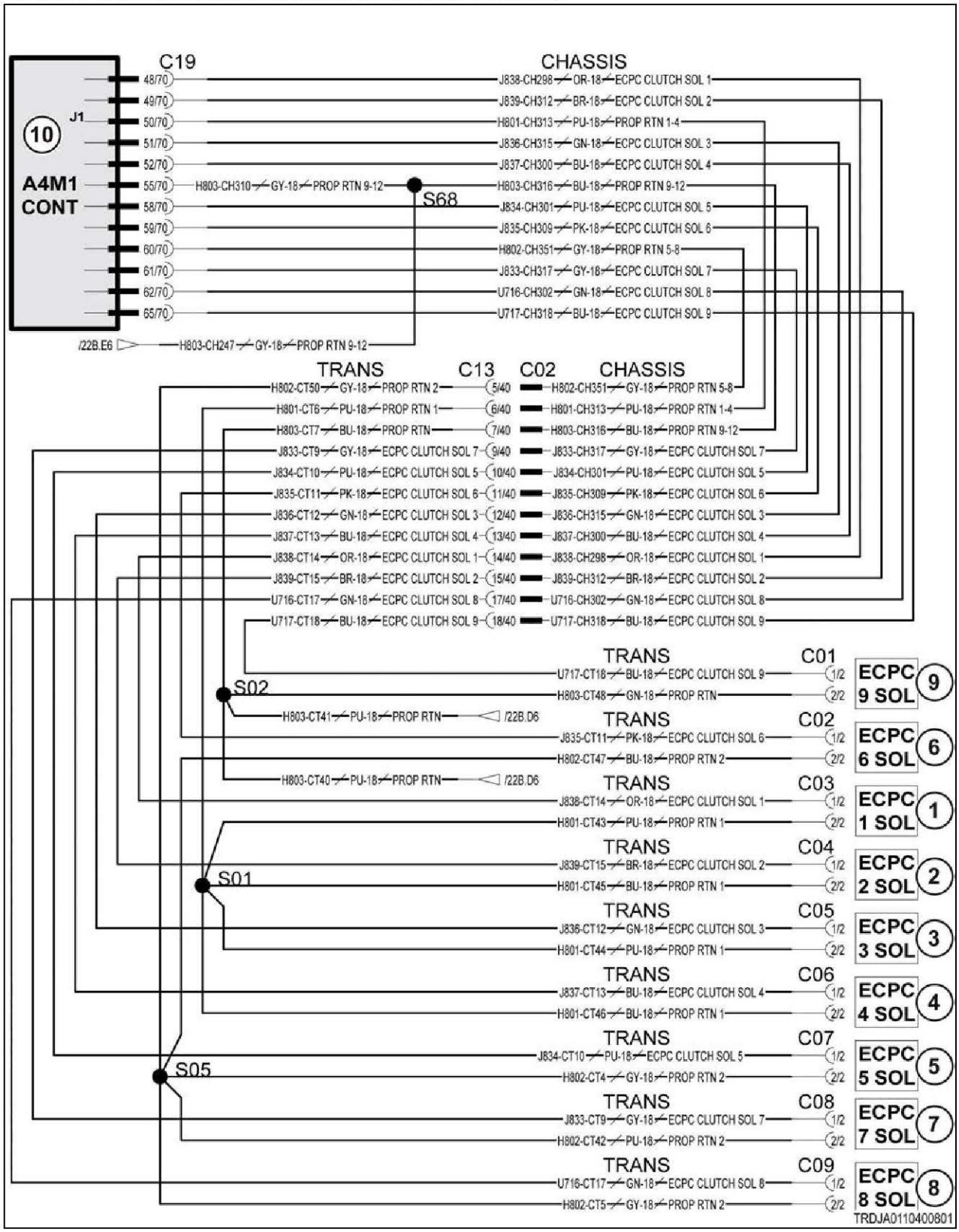

Fig. 195

Schematic legend		
Item	Schematic term	Description
1	ECPC 1 SOL	Electronic clutch pressure control solenoid 1
2	ECPC 2 SOL	Electronic clutch pressure control solenoid 2
3	ECPC 3 SOL	Electronic clutch pressure control solenoid 3
4	ECPC 4 SOL	Electronic clutch pressure control solenoid 4
5	ECPC 5 SOL	Electronic clutch pressure control solenoid 5
6	ECPC 6 SOL	Electronic clutch pressure control solenoid 6
7	ECPC 7 SOL	Electronic clutch pressure control solenoid 7
8	ECPC 8 SOL	Electronic clutch pressure control solenoid 8
9	ECPC 9 SOL	Electronic clutch pressure control solenoid 9
10	A4M1 CONT	Transmission module
--	PROP RTN	Proportional return

10.6.51 Code SA 03 SPN 737 FMI 03

The module detects that the transmission clutch solenoid 4 voltage is above normal.

Diagnosis and solution

1. Check the solenoid circuit for a short to battery power.
a) Turn the key start switch to the off position.
b) Turn the battery disconnect switch to the off position.
c) Disconnect the connector at the solenoid.
d) Disconnect the J1 harness connector from the transmission module.
e) Check resistance from transmission module contact J1-52 to all other J1 contacts.

Result

- All resistance measurements are high (more than 1000 ohms).

  The harness is not shorted.
- One or more resistance is at or near 0 ohms.

  Repair or replace the harness.

2. Check if the diagnostic code remains.
a) Check and clean the harness connector contacts.
b) Connect all the connectors.
c) Turn the battery disconnect switch to the on position.
d) Turn the key start switch to the on position.
e) Operate the machine at low idle.
f) Check if the diagnostic code remains.

Result

Expected result - the diagnostic code is not active.

Results:

- Yes - SPN 737 FMI 03 is not active.

  Stop.

- No - SPN 737 FMI 03 is active.

  Failure of the transmission module is possible but not common. Exit the procedure and do the procedure again. If the diagnostic code remains active, replace the module.

  Stop.

10.6.51.1 Transmission clutch solenoid electrical schematic

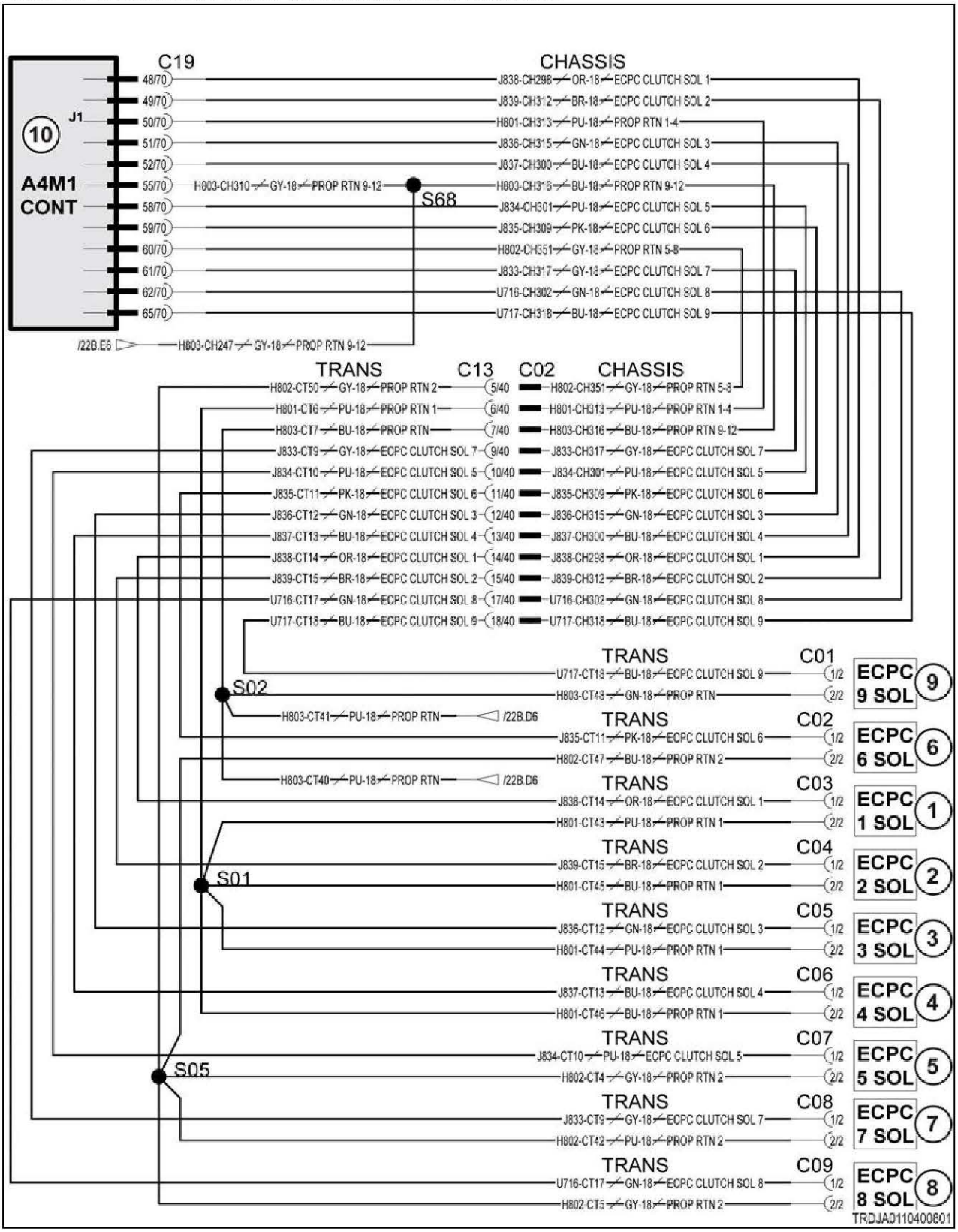

Fig. 196

Schematic legend		
Item	Schematic term	Description
1	ECPC 1 SOL	Electronic clutch pressure control solenoid 1
2	ECPC 2 SOL	Electronic clutch pressure control solenoid 2
3	ECPC 3 SOL	Electronic clutch pressure control solenoid 3
4	ECPC 4 SOL	Electronic clutch pressure control solenoid 4
5	ECPC 5 SOL	Electronic clutch pressure control solenoid 5
6	ECPC 6 SOL	Electronic clutch pressure control solenoid 6
7	ECPC 7 SOL	Electronic clutch pressure control solenoid 7
8	ECPC 8 SOL	Electronic clutch pressure control solenoid 8
9	ECPC 9 SOL	Electronic clutch pressure control solenoid 9
10	A4M1 CONT	Transmission module
--	PROP RTN	Proportional return

10.6.52 Code SA 03 SPN 737 FMI 05

The module detects that the transmission clutch solenoid 4 current is below normal.

The transmission module has detected an open circuit in the solenoid circuit. The most likely cause is a disconnected solenoid.

Diagnosis and solution

1. Check the solenoid coil resistance.
   a) Turn the key start switch to the off position.
   b) Turn the battery disconnect switch to the off position.
   c) Disconnect the clutch solenoid from the harness.
   d) Check the resistance between contacts 1 and 2 of the solenoid.

   Result

   - The resistance is between 5 and 10 ohms.

     The solenoid is not the fault.
   - The resistance is above 10 ohms.

     Replace the solenoid.

2. Check the harness for an open circuit.
   a) Install a shorting jumper between contacts 1 and 2 of the solenoid connector.
   b) Disconnect the J1 harness connector from the transmission module.
   c) Check the resistance between contacts J1-52 and J1-50 on the transmission module connector.

   Result

   - The resistance is at or near 0 ohms.

     The harness is not open.

     Remove the shorting jumper.
   - The resistance is high (not near 0 ohms).

     Repair or replace the harness.

3. Check if the diagnostic code remains.
   a) Check and clean the harness connector contacts.

b) Connect all the connectors.
c) Turn the battery disconnect switch to the on position.
d) Turn the key start switch to the on position.
e) Operate the machine at low idle.
f) Check if the diagnostic code remains.

Result

Expected result - the diagnostic code is not active.

Results:

- Yes - SPN 737 FMI 05 is not active.

  Stop.
- No - SPN 737 FMI 05 is active.

  Failure of the transmission module is possible but not common. Exit the procedure and do the procedure again. If the diagnostic code remains active, replace the module.

  Stop.

10.6.52.1 Transmission clutch solenoid electrical schematic

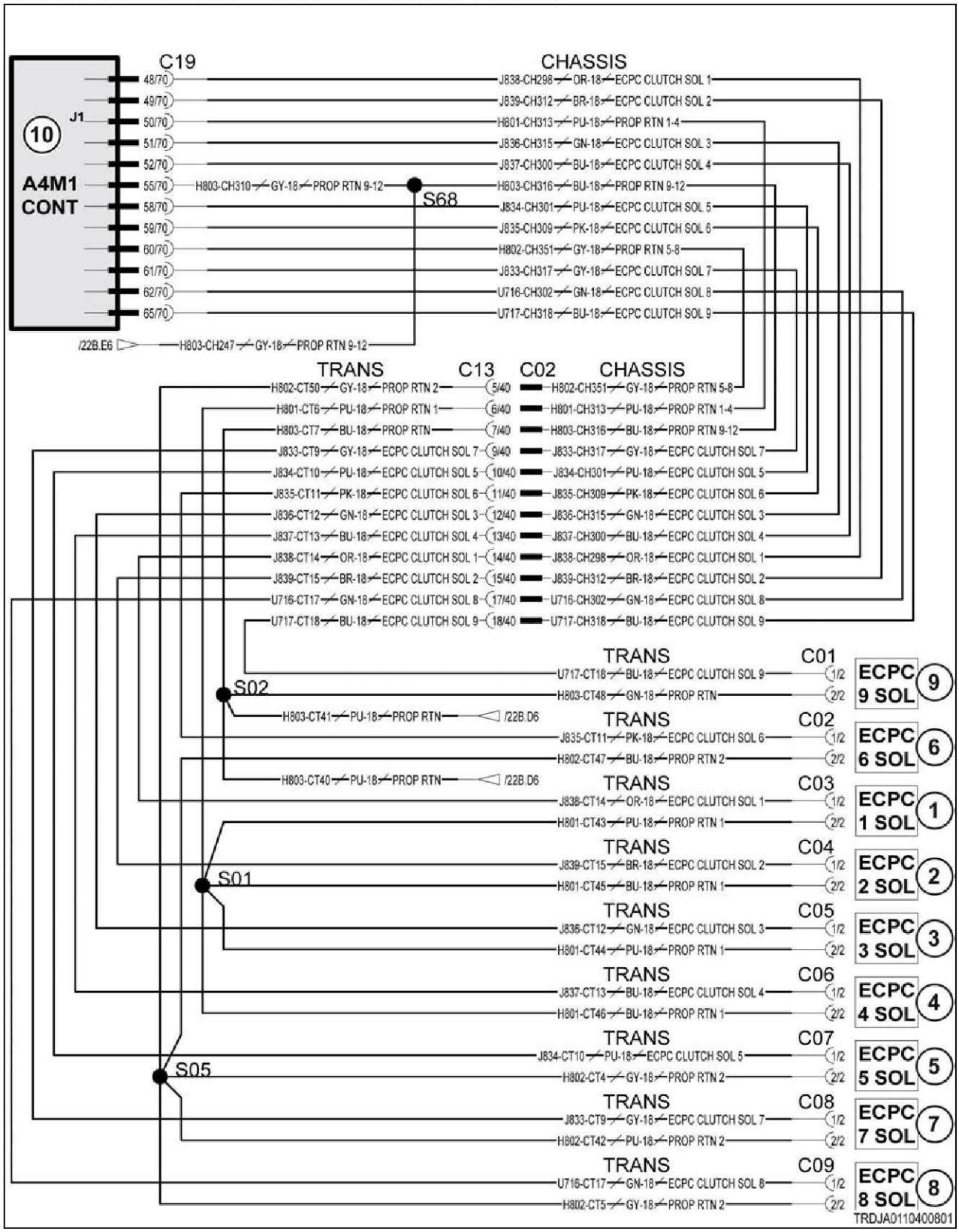

Fig. 197

Schematic legend		
Item	Schematic term	Description
1	ECPC 1 SOL	Electronic clutch pressure control solenoid 1
2	ECPC 2 SOL	Electronic clutch pressure control solenoid 2
3	ECPC 3 SOL	Electronic clutch pressure control solenoid 3
4	ECPC 4 SOL	Electronic clutch pressure control solenoid 4
5	ECPC 5 SOL	Electronic clutch pressure control solenoid 5
6	ECPC 6 SOL	Electronic clutch pressure control solenoid 6
7	ECPC 7 SOL	Electronic clutch pressure control solenoid 7
8	ECPC 8 SOL	Electronic clutch pressure control solenoid 8
9	ECPC 9 SOL	Electronic clutch pressure control solenoid 9
10	A4M1 CONT	Transmission module
--	PROP RTN	Proportional return

10.6.53 Code SA 03 SPN 737 FMI 06

The module detects that the transmission clutch solenoid 4 current is above normal.

The transmission module has detected excessive current in the solenoid circuit. The most likely cause is a short to ground or faulty solenoid.

Diagnosis and solution

1. Check the solenoid coil resistance.
- a) Turn the key start switch to the off position.
- b) Turn the battery disconnect switch to the off position.
- c) Disconnect the clutch solenoid from the harness.
- d) Check the resistance between contacts 1 and 2 of the solenoid.

Result

- The resistance is between 5 and 10 ohms.

  The solenoid is not the fault.

  Leave the solenoid disconnected.
- The resistance is at or near 0 ohms.

  Replace the solenoid.

2. Check the harness for a short circuit.
- a) Make sure the solenoid is still disconnected from the previous step.
- b) Disconnect J1 connector from the transmission module.
- c) Check the resistance between contacts J1-52 and J1-50 on the transmission module harness connector.

Result

- The resistance measurement is high (more than 1000 ohms).

  The harness is not shorted.
- The resistance is at or near 0 ohms.

  Repair or replace the harness.

3. Check if the diagnostic code remains.

a) Check and clean the harness connector contacts.
b) Connect all the connectors.
c) Turn the battery disconnect switch to the on position.
d) Turn the key start switch to the on position.
e) Operate the machine at low idle.
f) Check if the diagnostic code remains.

Result

Expected result - the diagnostic code is not active.

Results:

- Yes - SPN 737 FMI 06 is not active.

  Stop.
- No - SPN 737 FMI 06 is active.

  Failure of the transmission module is possible but not common. Exit the procedure and do the procedure again. If the diagnostic code remains active, replace the module.

  Stop.

10.6.53.1 Transmission clutch solenoid electrical schematic

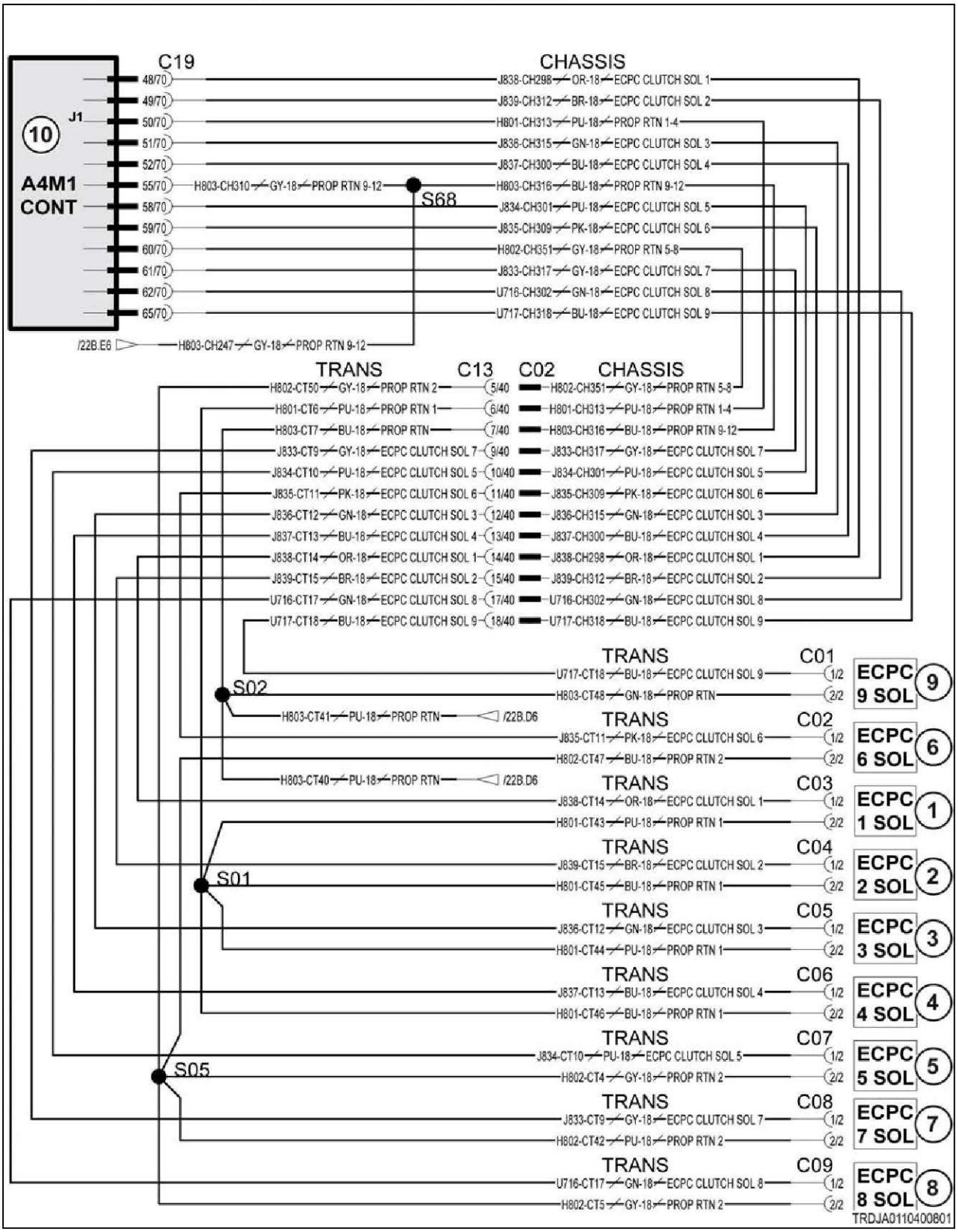

Fig. 198

Schematic legend		
Item	Schematic term	Description
1	ECPC 1 SOL	Electronic clutch pressure control solenoid 1
2	ECPC 2 SOL	Electronic clutch pressure control solenoid 2
3	ECPC 3 SOL	Electronic clutch pressure control solenoid 3
4	ECPC 4 SOL	Electronic clutch pressure control solenoid 4
5	ECPC 5 SOL	Electronic clutch pressure control solenoid 5
6	ECPC 6 SOL	Electronic clutch pressure control solenoid 6
7	ECPC 7 SOL	Electronic clutch pressure control solenoid 7
8	ECPC 8 SOL	Electronic clutch pressure control solenoid 8
9	ECPC 9 SOL	Electronic clutch pressure control solenoid 9
10	A4M1 CONT	Transmission module
--	PROP RTN	Proportional return

10.6.54 Code SA 03 SPN 738 FMI 03

The module detects that the transmission clutch solenoid 5 voltage is above normal.

Diagnosis and solution

1. Check the solenoid circuit for a short to battery power.
a) Turn the key start switch to the off position.
b) Turn the battery disconnect switch to the off position.
c) Disconnect the connector at the solenoid.
d) Disconnect the J1 harness connector from the transmission module.
e) Check resistance from transmission module contact J1-58 to all other J1 contacts.

Result

- All resistance measurements are high (more than 1000 ohms).

  The harness is not shorted.
- One or more resistance is at or near 0 ohms.

  Repair or replace the harness.

2. Check if the diagnostic code remains.
a) Check and clean the harness connector contacts.
b) Connect all the connectors.
c) Turn the battery disconnect switch to the on position.
d) Turn the key start switch to the on position.
e) Operate the machine at low idle.
f) Check if the diagnostic code remains.

Result

Expected result - the diagnostic code is not active.

Results:

- Yes - SPN 738 FMI 03 is not active.

  Stop.

- No - SPN 738 FMI 03 is active.

  Failure of the transmission module is possible but not common. Exit the procedure and do the procedure again. If the diagnostic code remains active, replace the module.

  Stop.

10.6.54.1 Transmission clutch solenoid electrical schematic

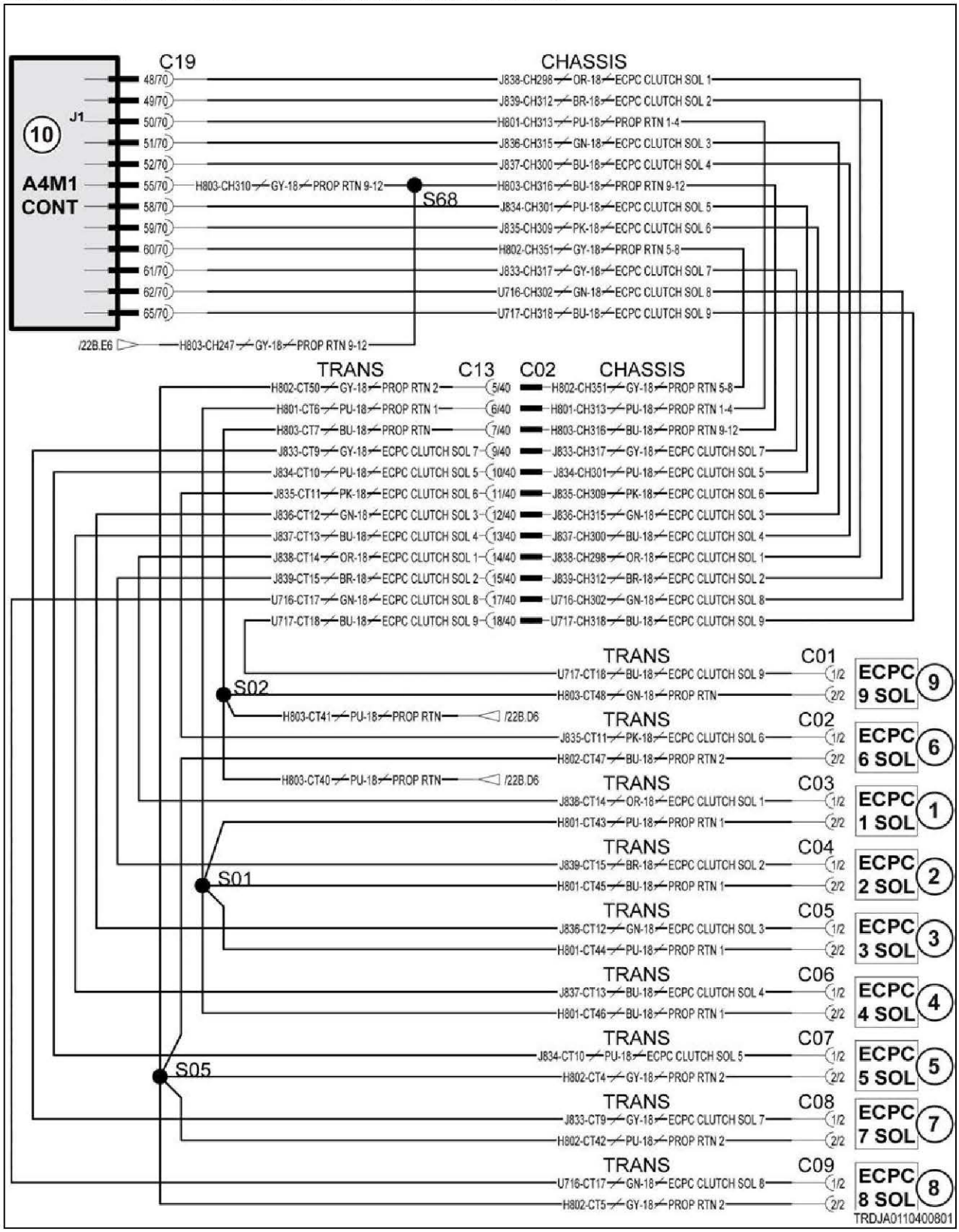

Fig. 199

Schematic legend		
Item	Schematic term	Description
1	ECPC 1 SOL	Electronic clutch pressure control solenoid 1
2	ECPC 2 SOL	Electronic clutch pressure control solenoid 2
3	ECPC 3 SOL	Electronic clutch pressure control solenoid 3
4	ECPC 4 SOL	Electronic clutch pressure control solenoid 4
5	ECPC 5 SOL	Electronic clutch pressure control solenoid 5
6	ECPC 6 SOL	Electronic clutch pressure control solenoid 6
7	ECPC 7 SOL	Electronic clutch pressure control solenoid 7
8	ECPC 8 SOL	Electronic clutch pressure control solenoid 8
9	ECPC 9 SOL	Electronic clutch pressure control solenoid 9
10	A4M1 CONT	Transmission module
--	PROP RTN	Proportional return

10.6.55 Code SA 03 SPN 738 FMI 05

The module detects that the transmission clutch solenoid 5 current is below normal.

The transmission module has detected an open circuit in the solenoid circuit. The most likely cause is a disconnected solenoid.

Diagnosis and solution

1. Check the solenoid coil resistance.
- a) Turn the key start switch to the off position.
- b) Turn the battery disconnect switch to the off position.
- c) Disconnect the clutch solenoid from the harness.
- d) Check the resistance between contacts 1 and 2 of the solenoid.

Result

- The resistance is between 5 and 10 ohms.

  The solenoid is not the fault.
- The resistance is above 10 ohms.

  Replace the solenoid.

2. Check the harness for an open circuit.
- a) Install a shorting jumper between contacts 1 and 2 of the solenoid connector.
- b) Disconnect the J1 harness connector from the transmission module.
- c) Check the resistance between contacts J1-58 and J1-60 on the transmission module connector.

Result

- The resistance is at or near 0 ohms.

  The harness is not open.

  Remove the shorting jumper.
- The resistance is high (not near 0 ohms).

  Repair or replace the harness.

3. Check if the diagnostic code remains.
- a) Check and clean the harness connector contacts.

b) Connect all the connectors.
c) Turn the battery disconnect switch to the on position.
d) Turn the key start switch to the on position.
e) Operate the machine at low idle.
f) Check if the diagnostic code remains.

Result

Expected result - the diagnostic code is not active.

Results:

- Yes - SPN 738 FMI 05 is not active.

  Stop.
- No - SPN 738 FMI 05 is active.

  Failure of the transmission module is possible but not common. Exit the procedure and do the procedure again. If the diagnostic code remains active, replace the module.

  Stop.

10.6.55.1 Transmission clutch solenoid electrical schematic

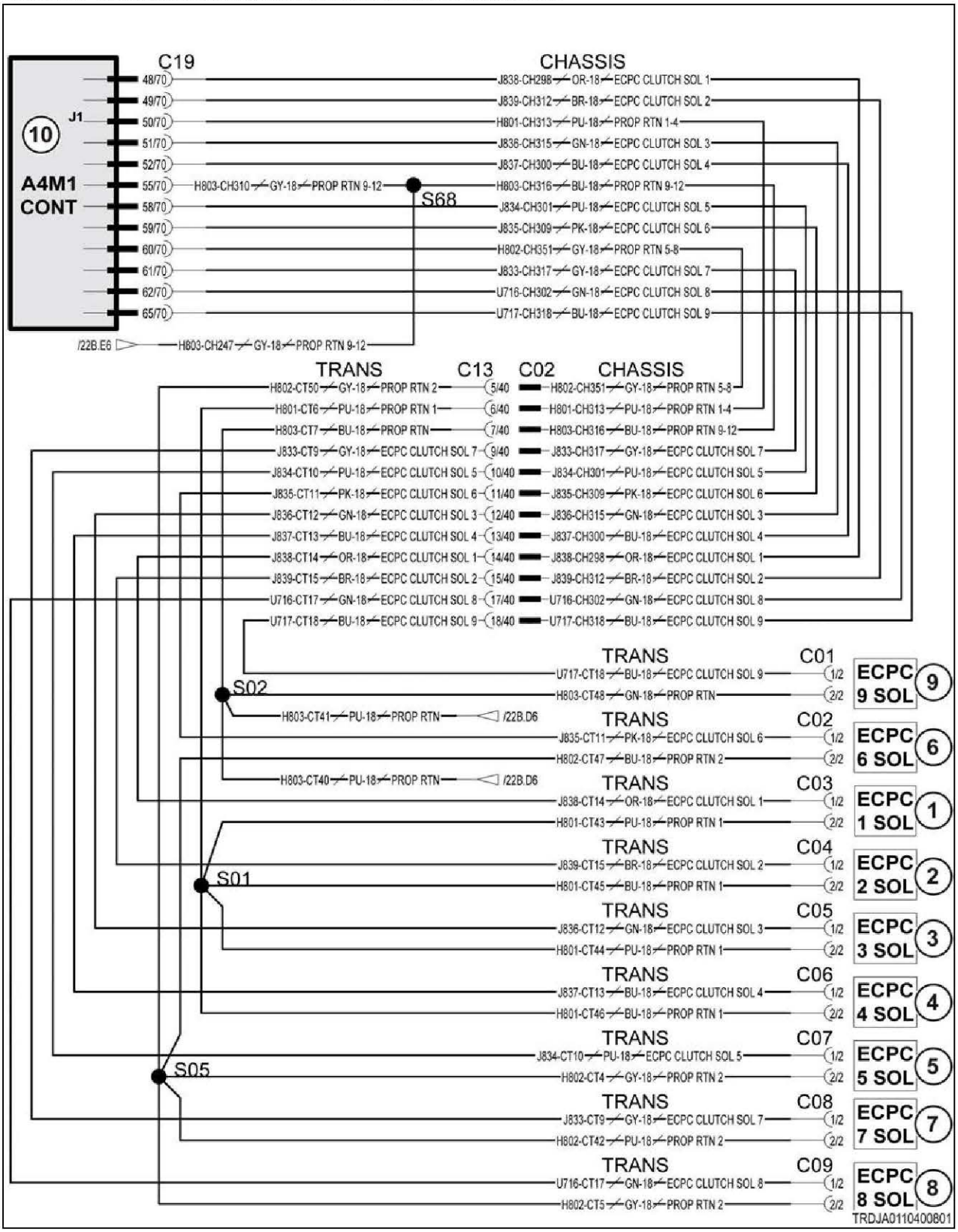

Fig. 200

Schematic legend		
Item	Schematic term	Description
1	ECPC 1 SOL	Electronic clutch pressure control solenoid 1
2	ECPC 2 SOL	Electronic clutch pressure control solenoid 2
3	ECPC 3 SOL	Electronic clutch pressure control solenoid 3
4	ECPC 4 SOL	Electronic clutch pressure control solenoid 4
5	ECPC 5 SOL	Electronic clutch pressure control solenoid 5
6	ECPC 6 SOL	Electronic clutch pressure control solenoid 6
7	ECPC 7 SOL	Electronic clutch pressure control solenoid 7
8	ECPC 8 SOL	Electronic clutch pressure control solenoid 8
9	ECPC 9 SOL	Electronic clutch pressure control solenoid 9
10	A4M1 CONT	Transmission module
--	PROP RTN	Proportional return

10.6.56 Code SA 03 SPN 738 FMI 06

The module detects that the transmission clutch solenoid 5 current is above normal.

The transmission module has detected excessive current in the solenoid circuit. The most likely cause is a short to ground or faulty solenoid.

Diagnosis and solution

1. Check the solenoid coil resistance.
- a) Turn the key start switch to the off position.
- b) Turn the battery disconnect switch to the off position.
- c) Disconnect the clutch solenoid from the harness.
- d) Check the resistance between contacts 1 and 2 of the solenoid.

Result

- The resistance is between 5 and 10 ohms.

  The solenoid is not the fault.

  Leave the solenoid disconnected.
- The resistance is at or near 0 ohms.

  Replace the solenoid.

2. Check the harness for a short circuit.
- a) Make sure the solenoid is still disconnected from the previous step.
- b) Disconnect J1 connector from the transmission module.
- c) Check the resistance between contacts J1-58 and J1-60 on the transmission module harness connector.

Result

- The resistance measurement is high (more than 1000 ohms).

  The harness is not shorted.
- The resistance is at or near 0 ohms.

  Repair or replace the harness.

3. Check if the diagnostic code remains.

a) Check and clean the harness connector contacts.
b) Connect all the connectors.
c) Turn the battery disconnect switch to the on position.
d) Turn the key start switch to the on position.
e) Operate the machine at low idle.
f) Check if the diagnostic code remains.

Result

Expected result - the diagnostic code is not active.

Results:

- Yes - SPN 738 FMI 06 is not active.

  Stop.
- No - SPN 738 FMI 06 is active.

  Failure of the transmission module is possible but not common. Exit the procedure and do the procedure again. If the diagnostic code remains active, replace the module.

  Stop.

10.6.56.1 Transmission clutch solenoid electrical schematic

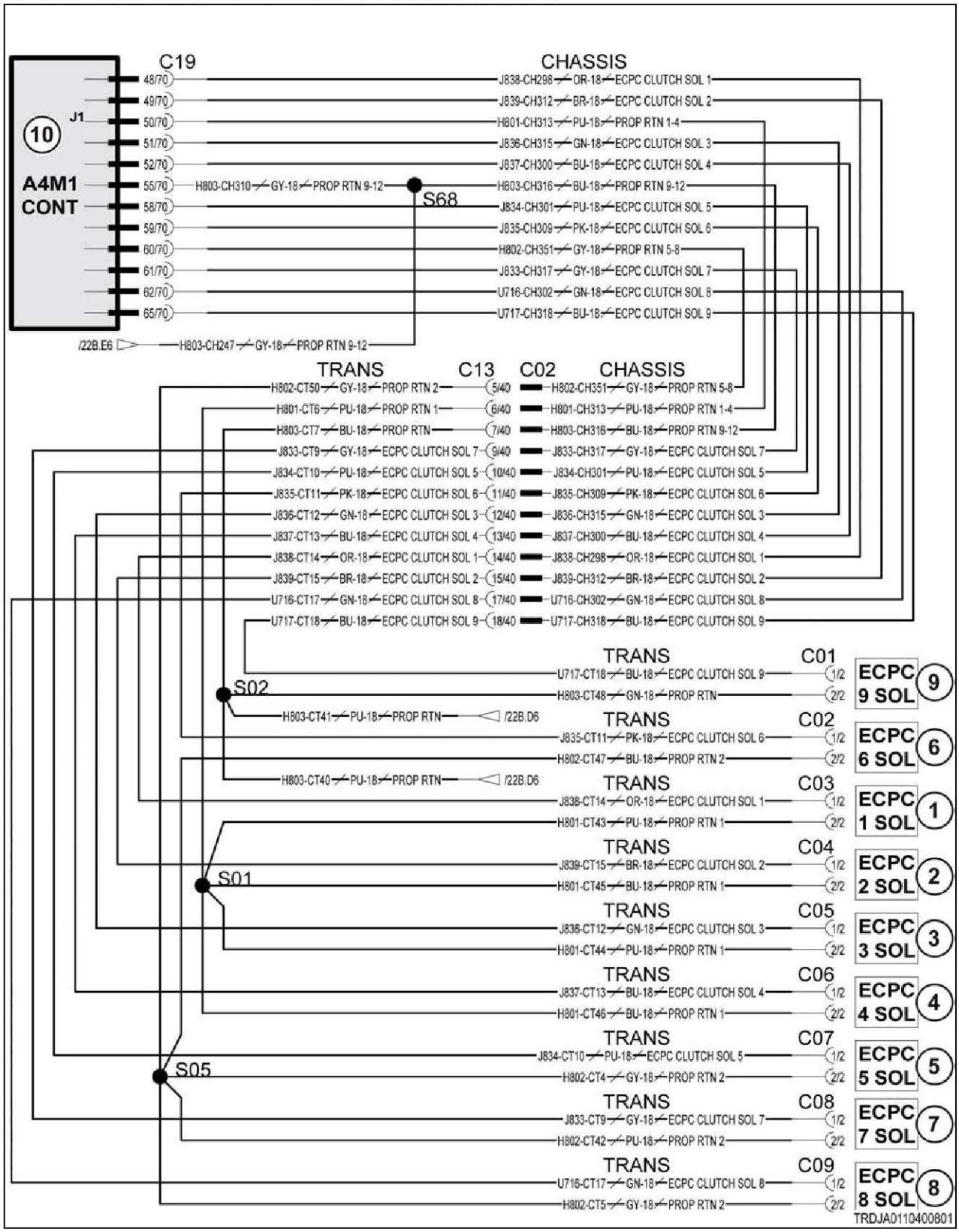

Fig. 201

Schematic legend		
Item	Schematic term	Description
1	ECPC 1 SOL	Electronic clutch pressure control solenoid 1
2	ECPC 2 SOL	Electronic clutch pressure control solenoid 2
3	ECPC 3 SOL	Electronic clutch pressure control solenoid 3
4	ECPC 4 SOL	Electronic clutch pressure control solenoid 4
5	ECPC 5 SOL	Electronic clutch pressure control solenoid 5
6	ECPC 6 SOL	Electronic clutch pressure control solenoid 6
7	ECPC 7 SOL	Electronic clutch pressure control solenoid 7
8	ECPC 8 SOL	Electronic clutch pressure control solenoid 8
9	ECPC 9 SOL	Electronic clutch pressure control solenoid 9
10	A4M1 CONT	Transmission module
--	PROP RTN	Proportional return

10.6.57 Code SA 03 SPN 739 FMI 03

The module detects that the transmission clutch solenoid 6 voltage is above normal.

Diagnosis and solution

1. Check the solenoid circuit for a short to battery power.
a) Turn the key start switch to the off position.
b) Turn the battery disconnect switch to the off position.
c) Disconnect the connector at the solenoid.
d) Disconnect the J1 harness connector from the transmission module.
e) Check resistance from transmission module contact J1-59 to all other J1 contacts.

Result

- All resistance measurements are high (more than 1000 ohms).

  The harness is not shorted.
- One or more resistance is at or near 0 ohms.

  Repair or replace the harness.

2. Check if the diagnostic code remains.
a) Check and clean the harness connector contacts.
b) Connect all the connectors.
c) Turn the battery disconnect switch to the on position.
d) Turn the key start switch to the on position.
e) Operate the machine at low idle.
f) Check if the diagnostic code remains.

Result

Expected result - the diagnostic code is not active.

Results:

- Yes - SPN 739 FMI 03 is not active.

  Stop.

- No - SPN 739 FMI 03 is active.

  Failure of the transmission module is possible but not common. Exit the procedure and do the procedure again. If the diagnostic code remains active, replace the module.

  Stop.

10.6.57.1 Transmission clutch solenoid electrical schematic

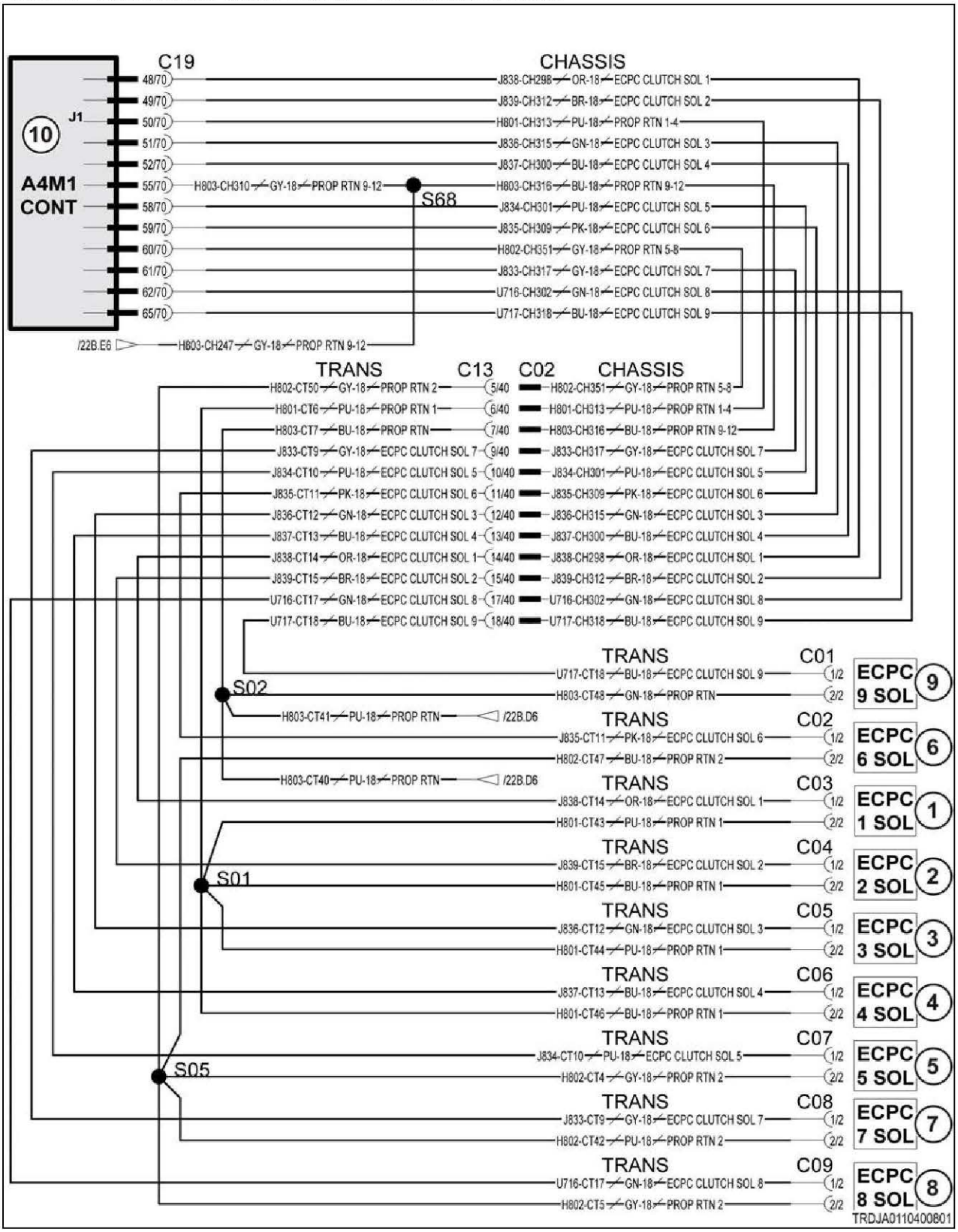

Fig. 202

Schematic legend		
Item	Schematic term	Description
1	ECPC 1 SOL	Electronic clutch pressure control solenoid 1
2	ECPC 2 SOL	Electronic clutch pressure control solenoid 2
3	ECPC 3 SOL	Electronic clutch pressure control solenoid 3
4	ECPC 4 SOL	Electronic clutch pressure control solenoid 4
5	ECPC 5 SOL	Electronic clutch pressure control solenoid 5
6	ECPC 6 SOL	Electronic clutch pressure control solenoid 6
7	ECPC 7 SOL	Electronic clutch pressure control solenoid 7
8	ECPC 8 SOL	Electronic clutch pressure control solenoid 8
9	ECPC 9 SOL	Electronic clutch pressure control solenoid 9
10	A4M1 CONT	Transmission module
--	PROP RTN	Proportional return

10.6.58 Code SA 03 SPN 739 FMI 05

The module detects that the transmission clutch solenoid 6 current is below normal.

The transmission module has detected an open circuit in the solenoid circuit. The most likely cause is a disconnected solenoid.

Diagnosis and solution

1. Check the solenoid coil resistance.
   a) Turn the key start switch to the off position.
   b) Turn the battery disconnect switch to the off position.
   c) Disconnect the clutch solenoid from the harness.
   d) Check the resistance between contacts 1 and 2 of the solenoid.

   Result

   - The resistance is between 5 and 10 ohms.

     The solenoid is not the fault.
   - The resistance is above 10 ohms.

     Replace the solenoid.

2. Check the harness for an open circuit.
   a) Install a shorting jumper between contacts 1 and 2 of the solenoid connector.
   b) Disconnect the J1 harness connector from the transmission module.
   c) Check the resistance between contacts J1-59 and J1-60 on the transmission module connector.

   Result

   - The resistance is at or near 0 ohms.

     The harness is not open.

     Remove the shorting jumper.
   - The resistance is high (not near 0 ohms).

     Repair or replace the harness.

3. Check if the diagnostic code remains.
   a) Check and clean the harness connector contacts.

b) Connect all the connectors.
c) Turn the battery disconnect switch to the on position.
d) Turn the key start switch to the on position.
e) Operate the machine at low idle.
f) Check if the diagnostic code remains.

Result

Expected result - the diagnostic code is not active.

Results:

- Yes - SPN 739 FMI 05 is not active.

  Stop.
- No - SPN 739 FMI 05 is active.

  Failure of the transmission module is possible but not common. Exit the procedure and do the procedure again. If the diagnostic code remains active, replace the module.

  Stop.

10.6.58.1 Transmission clutch solenoid electrical schematic

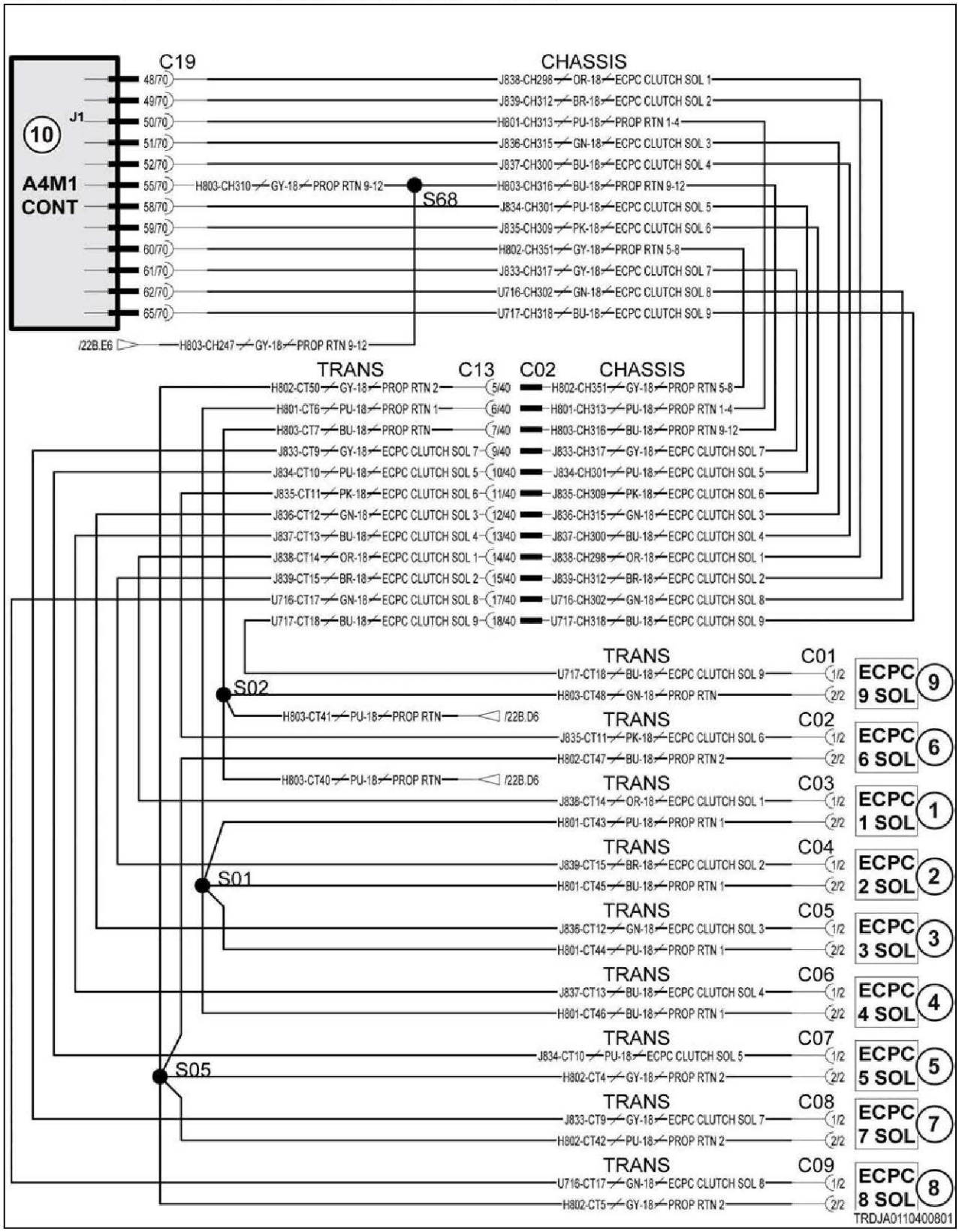

Fig. 203

Schematic legend		
Item	Schematic term	Description
1	ECPC 1 SOL	Electronic clutch pressure control solenoid 1
2	ECPC 2 SOL	Electronic clutch pressure control solenoid 2
3	ECPC 3 SOL	Electronic clutch pressure control solenoid 3
4	ECPC 4 SOL	Electronic clutch pressure control solenoid 4
5	ECPC 5 SOL	Electronic clutch pressure control solenoid 5
6	ECPC 6 SOL	Electronic clutch pressure control solenoid 6
7	ECPC 7 SOL	Electronic clutch pressure control solenoid 7
8	ECPC 8 SOL	Electronic clutch pressure control solenoid 8
9	ECPC 9 SOL	Electronic clutch pressure control solenoid 9
10	A4M1 CONT	Transmission module
--	PROP RTN	Proportional return

10.6.59 Code SA 03 SPN 739 FMI 06

The module detects that the transmission clutch solenoid 6 current is above normal.

The transmission module has detected excessive current in the solenoid circuit. The most likely cause is a short to ground or faulty solenoid.

Diagnosis and solution

1. Check the solenoid coil resistance.
- a) Turn the key start switch to the off position.
- b) Turn the battery disconnect switch to the off position.
- c) Disconnect the clutch solenoid from the harness.
- d) Check the resistance between contacts 1 and 2 of the solenoid.

Result

- The resistance is between 5 and 10 ohms.

  The solenoid is not the fault.

  Leave the solenoid disconnected.
- The resistance is at or near 0 ohms.

  Replace the solenoid.

2. Check the harness for a short circuit.
- a) Make sure the solenoid is still disconnected from the previous step.
- b) Disconnect J1 connector from the transmission module.
- c) Check the resistance between contacts J1-59 and J1-60 on the transmission module harness connector.

Result

- The resistance measurement is high (more than 1000 ohms).

  The harness is not shorted.
- The resistance is at or near 0 ohms.

  Repair or replace the harness.

3. Check if the diagnostic code remains.

a) Check and clean the module connector contacts.
b) Connect all the connectors.
c) Turn the battery disconnect switch to the on position.
d) Turn the key start switch to the on position.
e) Operate the machine at low idle.
f) Check if the diagnostic code remains.

Result

Expected result - the diagnostic code is not active.

Results:

- Yes - SPN 739 FMI 06 is not active.

  Stop.
- No - SPN 739 FMI 06 is active.

  Failure of the transmission module is possible but not common. Exit the procedure and do the procedure again. If the diagnostic code remains active, replace the module.

  Stop.

10.6.59.1 Transmission clutch solenoid electrical schematic

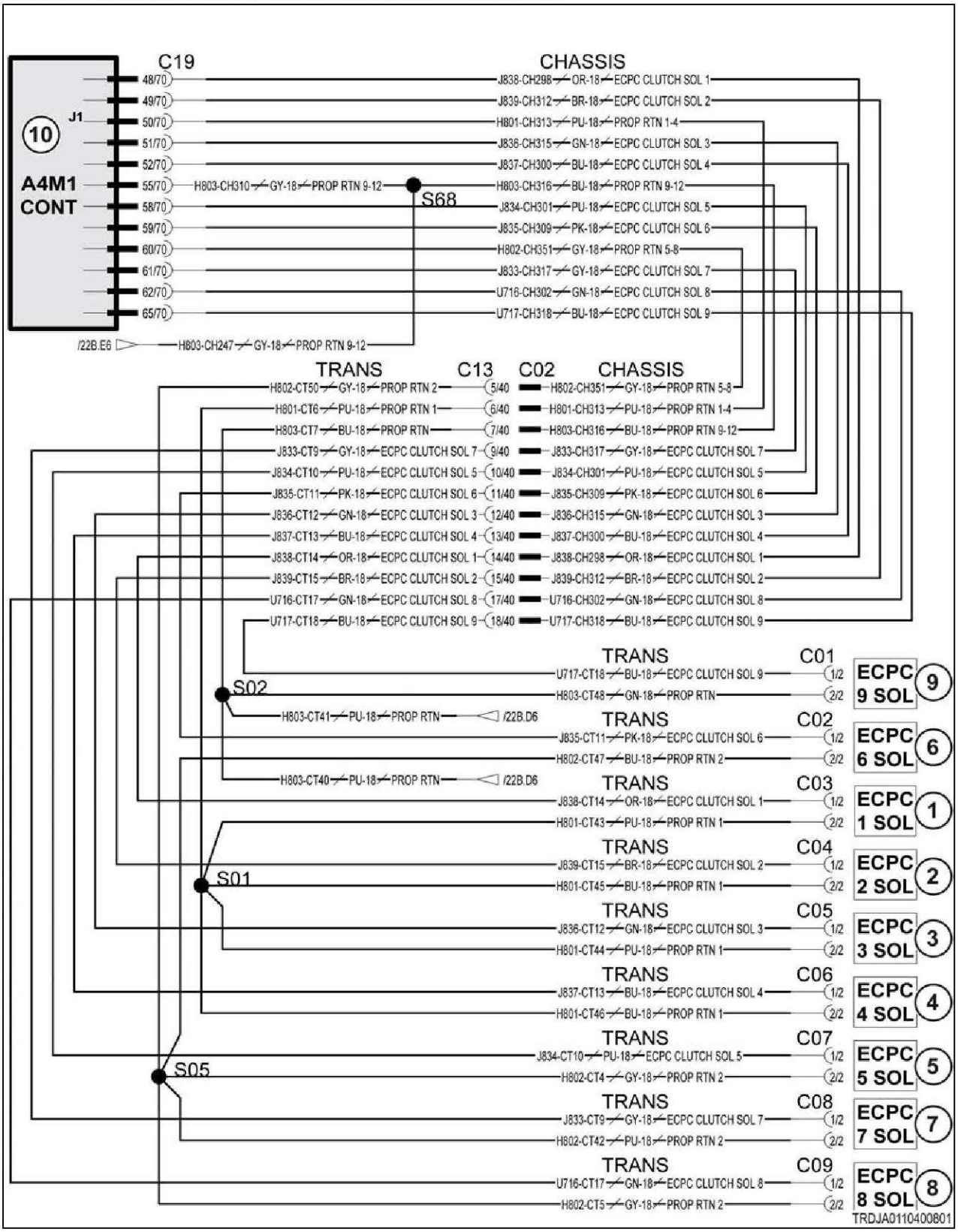

Fig. 204

Schematic legend		
Item	Schematic term	Description
1	ECPC 1 SOL	Electronic clutch pressure control solenoid 1
2	ECPC 2 SOL	Electronic clutch pressure control solenoid 2
3	ECPC 3 SOL	Electronic clutch pressure control solenoid 3
4	ECPC 4 SOL	Electronic clutch pressure control solenoid 4
5	ECPC 5 SOL	Electronic clutch pressure control solenoid 5
6	ECPC 6 SOL	Electronic clutch pressure control solenoid 6
7	ECPC 7 SOL	Electronic clutch pressure control solenoid 7
8	ECPC 8 SOL	Electronic clutch pressure control solenoid 8
9	ECPC 9 SOL	Electronic clutch pressure control solenoid 9
10	A4M1 CONT	Transmission module
--	PROP RTN	Proportional return

10.6.60 Code SA 03 SPN 1638 FMI 00

The module detects that the hydraulic oil temperature is above normal.

SA 03 SPN 177 FMI 00 and SA 03 SPN 1638 FMI 00 represent the same fault conditions for this machine, and either/both codes may be reported when those conditions exist.

Diagnosis and solution

1. Check the transmission for overheating.

a) Check the hydraulic oil cooler and the cooling package for any external airflow restriction.

b) Check the transmission oil level. See the information for checking the transmission oil level in the service manual.

c) Turn the key start switch to the on position.

d) Let the transmission hydraulic system warm to normal range.

e) Check the actual transmission temperature.

Result

- The transmission is operating above normal temperature.

  Continue troubleshooting the transmission temperature. See the service manual for instruction on testing the transmission hydraulic systems.
- The transmission is operating at normal temperature.

  The sensor may be faulty.

  See step 2 to check the sensor.

2. Check the hydraulic oil temperature sensor.

a) Turn the key start switch to the off position.

b) Turn the battery disconnect switch to the off position.

c) Check the resistance from hydraulic oil temperature sensor contact 1 to contact 2.

d) Compare the actual oil temperature with the resistance using the table below.

Temperature C (F)	Resistance (ohms)
0 C	3440
20 C	1249
60 C	248
99 C	70

Result

- The resistance is correct.

  See step 3 to validate the repair.
- The resistance is not correct.

  Replace the hydraulic oil temperature sensor.

  See step 3 to validate the repair.

3. Check if the diagnostic code remains.

a) Connect all the connectors.
b) Turn the battery disconnect switch to the on position.
c) Turn the key start switch to the on position.
d) Operate the machine at low idle.
e) Check if the diagnostic code remains.

Result

- SPN 1638 FMI 00 is not active.

  Stop.
- SPN 1638 FMI 00 is active.

  Failure of the transmission module is possible but not common. Exit the procedure and do the procedure again. If the diagnostic code remains active, replace the module.

  Stop.

10.6.60.1 Transmission hydraulic oil charge pressure sensor electrical schematic

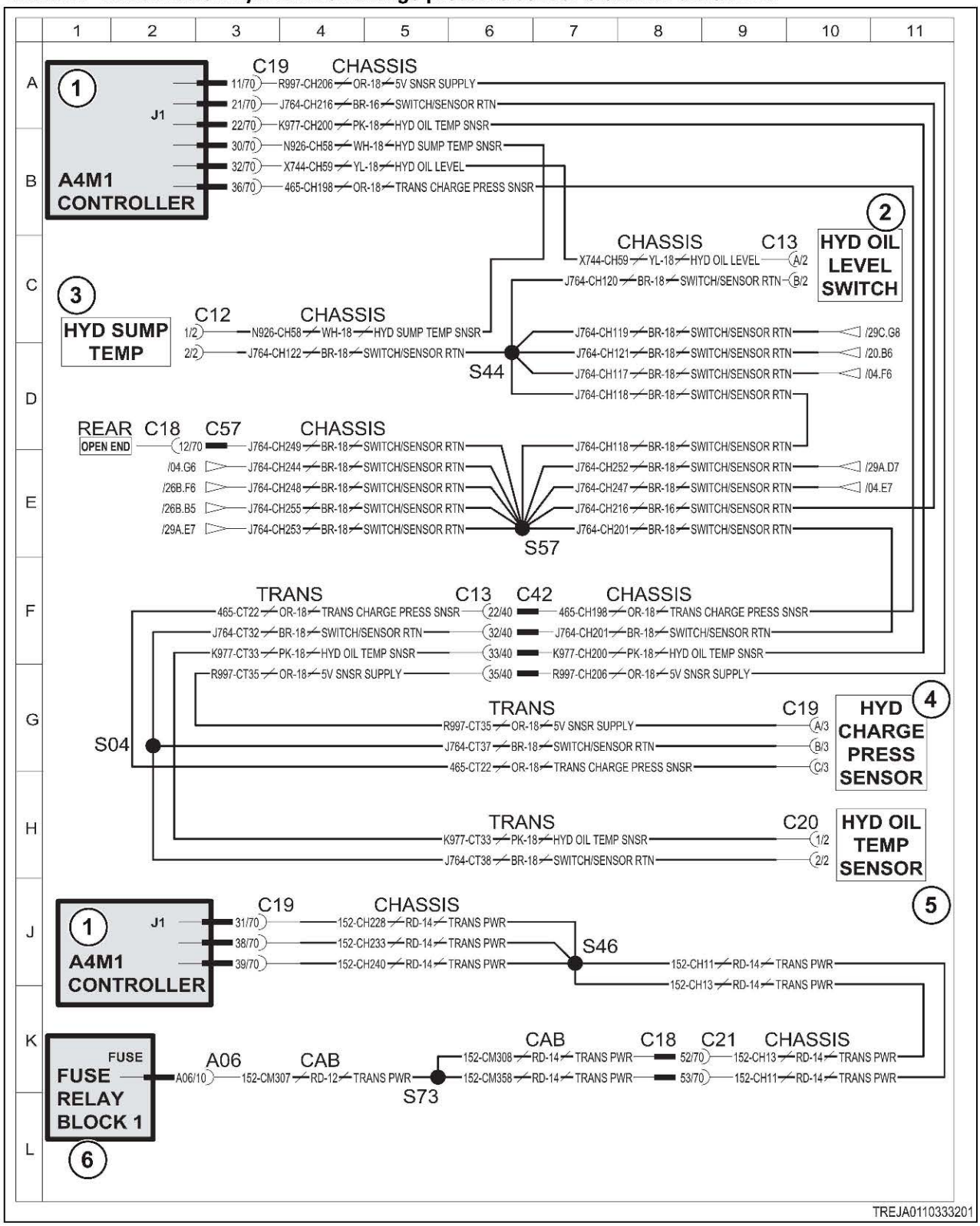

Fig. 205

Schematic legend		
Item	Schematic term	Description
1	A4M1 CONTROLLER	Transmission module
2	HYD OIL LEVEL SWITCH	Hydraulic oil level switch
3	HYD SUMP TEMP	Hydraulic sump temperature sensor
4	HYD CHARGE PRESS SENSOR	Hydraulic charge pressure sensor
5	HYD OIL TEMP SENSOR	Hydraulic oil temperature sensor
6	FUSE RELAY BLOCK 1	Fuse relay block 1
-	5V SNSR SUPPLY	5 volt sensor supply
-	SWITCH/SENSOR RTN	Switch/sensor return
-	TRANS CHARGE PRESS SNSR	Transmission charge pressure sensor
-	TRANS PWR	Transmission power

10.6.61 Code SA 03 SPN 1638 FMI 03

The module detects that the hydraulic oil temperature sensor voltage is above normal.

The transmission oil temperature sensor is a temperature-controlled resistive element. The higher the temperature, the lower the resistance. The voltage is reported by the transmission module as too high, indicating an open circuit. The most likely cause is a disconnected sensor or the sensor itself.

SA 03 SPN 177 FMI 03 and SA 03 SPN 1638 FMI 03 represent the same fault conditions for this machine, and either/both codes may be reported when those conditions exist.

Diagnosis and solution

1. Check the hydraulic oil temperature sensor resistance, at the sensor.

a) Turn the key start switch to the off position.
b) Disconnect the sensor from the harness.
c) Check the resistance from the sensor contact 1 to contact 2.
d) Compare the actual oil temperature with the resistance using the table below.

Temperature C (F)	Resistance (ohms)
0 C	3440
20 C	1249
60 C	248
99 C	70

Result

- The resistance is correct.

  See step 2 to check the harness
- The resistance is not correct (too high).

  Replace the hydraulic oil temperature sensor.

  See step 4 to validate the repair.

2. Check the hydraulic oil temperature sensor resistance, at the transmission module.

a) Inspect and clean the temperature sensor connector contacts.
b) Reconnect the temperature sensor.
c) Disconnect the J1 harness connector from the transmission module.

d) Check the resistance from contacts 21 to 22 of the J1 harness connector at the transmission module .

Result

- The resistance at the module is the same or similar to the resistance at the sensor (from previous step).

  The harness may be shorted to battery.

  See step 3 to check the voltage.
- The resistance is more than 5000 ohms.

  The harness is open circuit.

  Repair or replace the harness.

  See step 4 to validate the repair.

3. Check the sensor voltage at the transmission module.

a) Inspect and clean the J1 harness connector.
b) Reconnect the J1 connector to the transmission module.
c) Turn the key start switch to the on position.
d) Let the transmission hydraulic system warm to normal range.
e) Check voltage between contacts 21 and 22 of the J1 harness connector at the transmission module.

Result

Because the harness and sensor resistance was previously confirmed, a high voltage at this step indicates a short circuit to positive power.

- The transmission is at operating temperature, and the voltage is at or below 5 volts.

  The sensor and circuit are good.

  If the error code persists, the transmission module is faulty.

  Replace the transmission module.

  See step 4 to validate the repair.
- The transmission is at operating temperature, and the voltage is at or near 12 volts.

  The harness is shorted to battery positive.

  Repair or replace the harness.

  See step 4 to validate the repair.

4. Check if the diagnostic code remains.

a) Make sure all connectors are cleaned and replaced.
b) Turn the battery disconnect switch to the on position.
c) Turn the key start switch to the on position.
d) Let the transmission hydraulic system warm to normal range.
e) Check if the diagnostic code remains.

Result

- SPN 1638 FMI 03 is not active.

  Stop.
- SPN 1638 FMI 03 is active.

  Failure of the transmission module is possible but not common. Exit the procedure and do the procedure again. If the diagnostic code remains active, replace the module.

  Stop.

10.6.61.1 Transmission hydraulic oil charge pressure sensor electrical schematic

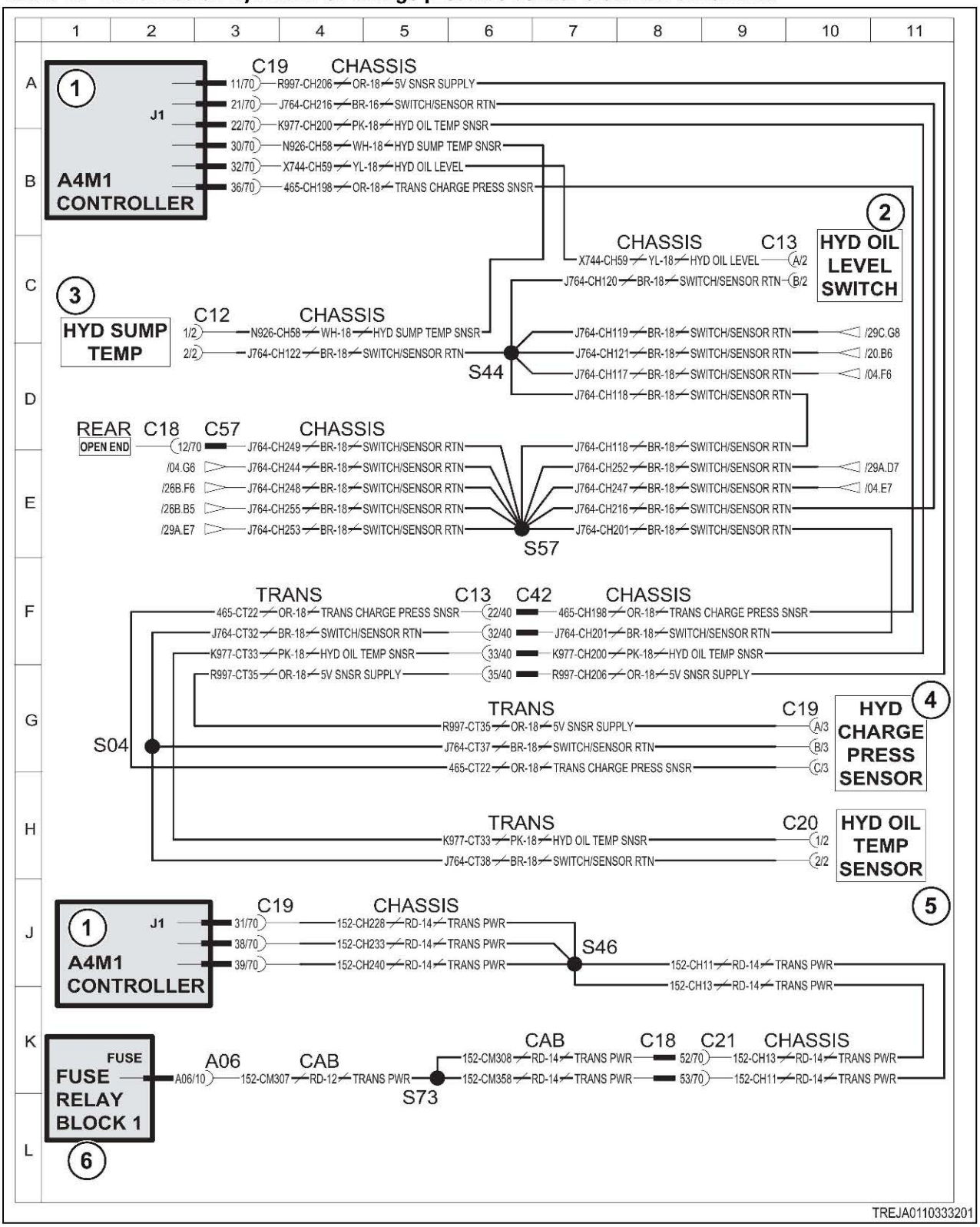

Fig. 206

Schematic legend		
Item	Schematic term	Description
1	A4M1 CONTROLLER	Transmission module
2	HYD OIL LEVEL SWITCH	Hydraulic oil level switch
3	HYD SUMP TEMP	Hydraulic sump temperature sensor
4	HYD CHARGE PRESS SENSOR	Hydraulic charge pressure sensor
5	HYD OIL TEMP SENSOR	Hydraulic oil temperature sensor
6	FUSE RELAY BLOCK 1	Fuse relay block 1
-	5V SNSR SUPPLY	5 volt sensor supply
-	SWITCH/SENSOR RTN	Switch/sensor return
-	TRANS CHARGE PRESS SNSR	Transmission charge pressure sensor
-	TRANS PWR	Transmission power

10.6.62 Code SA 03 SPN 1638 FMI 04

The module detects that the hydraulic oil temperature sensor voltage is below normal.

The transmission oil temperature sensor is a temperature-controlled resistive element. The higher the temperature, the lower the resistance. The voltage is reported by the transmission module as too low, indicating a short circuit. The most likely cause is a faulty sensor or short circuit.

SA 03 SPN 177 FMI 03 and SA 04 SPN 1638 FMI 04 represent the same fault conditions for this machine, and either/both codes may be reported when those conditions exist.

Diagnosis and solution

1. Check the hydraulic oil temperature sensor resistance, at the sensor.

a) Turn the key start switch to the off position.
b) Disconnect the sensor from the harness.
c) Check the resistance from the sensor contact 1 to contact 2.
d) Compare the actual oil temperature with the resistance using the table below.

Temperature C (F)	Resistance (ohms)
0 C	3440
20 C	1249
60 C	248
99 C	70

Result

- The resistance is correct.

  Leave the sensor disconnected.

  See step 2 to check the harness for short to ground.
- The resistance is not correct (too low).

  Replace the hydraulic oil temperature sensor.

  See step 4 to Validate the repair

2. Check the harness for short circuit to ground.

a) Make sure the sensor is still disconnected from the previous step.
b) Disconnect the J1 harness connector from the transmission module.

c) Check the resistance from contacts 21 to 22 of the J1 harness connector at the transmission module .

Result

- The resistance is high (more than 1000 ohms).

  The harness is not shorted.

  See step 3 to check the sensor voltage.
- The resistance is at or near 0 ohms.

  The harness is shorted to ground.

  Repair or replace the harness.

  See step 4 to Validate the repair

3. Check the voltage at the transmission module.

a) Inspect and clean the sensor connector.
b) Connect the sensor to the harness.
c) Inspect and clean the J1 harness connector.
d) Connect the J1 connector to the transmission module.
e) Turn the key start switch to the on position.
f) Check the voltage from contact J1-21 to J1-22 at the transmission module.

Result

- If the voltage is at or near 0 volts, the transmission module ouput power to the sensor is faulty.

  Replace the transmission module.

4. Check if the diagnostic code remains.

a) Check and clean the harness connector contacts.
b) Connect all the connectors.
c) Turn the key start switch to the on position.
d) Operate the machine at low idle.
e) Check if the diagnostic code remains.

Result

Expected result - the diagnostic code is not active.

Results:

- Yes - SPN 177 FMI 04 is not active.

  Stop.
- No - SPN 177 FMI 04 is active.

  Failure of the transmission module is possible but not common. Exit the procedure and do the procedure again. If the diagnostic code remains active, replace the module.

  Stop.

10.6.62.1 Transmission hydraulic oil charge pressure sensor electrical schematic

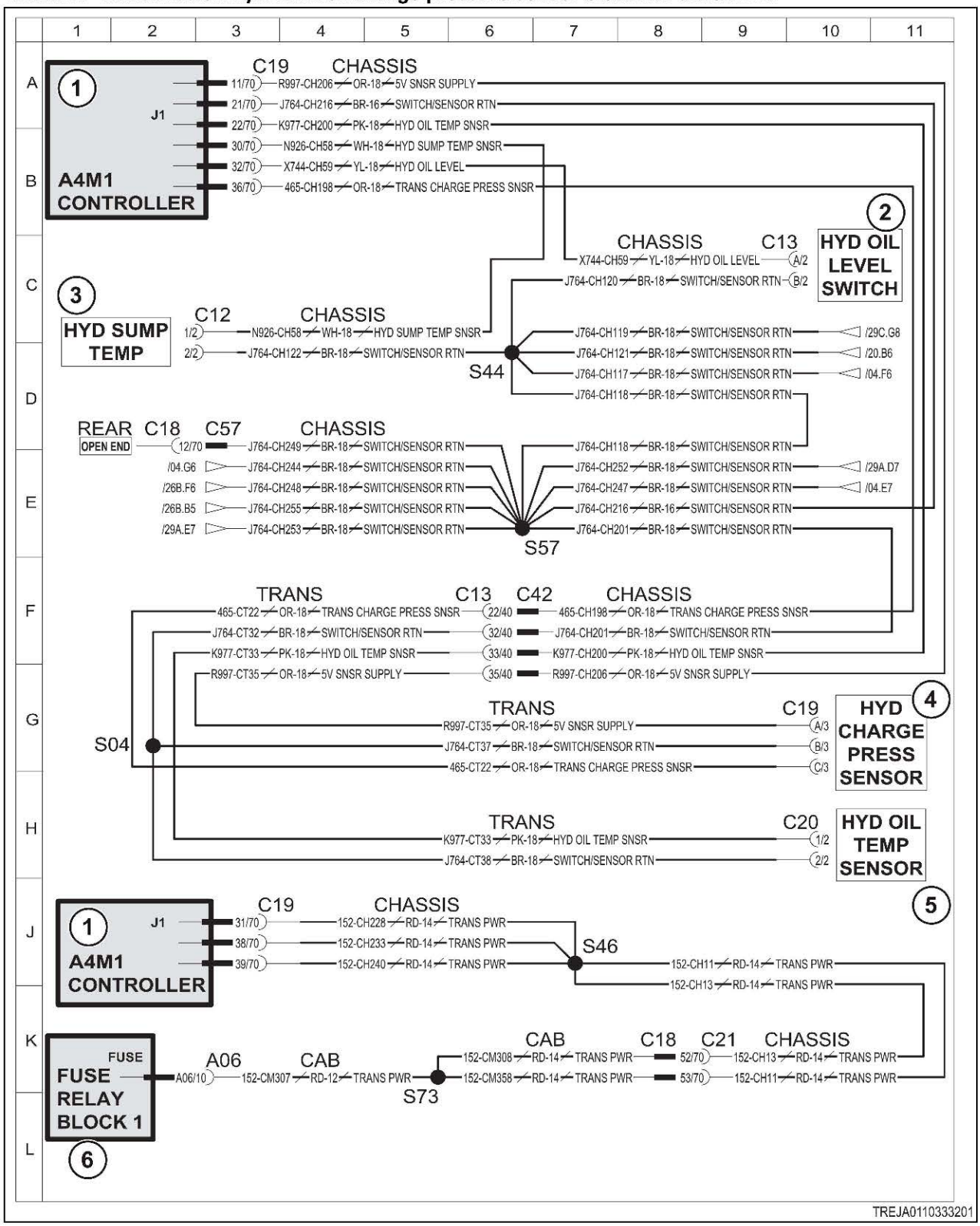

Fig. 207

Schematic legend		
Item	Schematic term	Description
1	A4M1 CONTROLLER	Transmission module
2	HYD OIL LEVEL SWITCH	Hydraulic oil level switch
3	HYD SUMP TEMP	Hydraulic sump temperature sensor
4	HYD CHARGE PRESS SENSOR	Hydraulic charge pressure sensor
5	HYD OIL TEMP SENSOR	Hydraulic oil temperature sensor
6	FUSE RELAY BLOCK 1	Fuse relay block 1
-	5V SNSR SUPPLY	5 volt sensor supply
-	SWITCH/SENSOR RTN	Switch/sensor return
-	TRANS CHARGE PRESS SNSR	Transmission charge pressure sensor
-	TRANS PWR	Transmission power

10.6.63 Code SA 03 SPN 1713 FMI 14

The module detects that the implement oil filter bypass switch sensor signal is not within normal range.

Diagnosis and solution

1. Change the implement oil hydraulic filter.
a) See the service manual for the filter change procedure.
b) Turn the battery disconnect switch to the on position.
c) Turn the key start switch to the on position.
d) Start the machine and operate the hydraulics.
e) Check the status of SPN 1713 FMI 14.

Result

Expected result - SPN 1713 FMI 14 is no longer active.

Results:

- Yes - SPN 1713 FMI 14 is no longer active.

  Stop.
- No - SPN 1713 FMI 14 is active.

2. Check the implement filter bypass switch.
a) Turn the key start switch to the off position.
b) Turn the battery disconnect switch to the off position.
c) Remove the key from the battery disconnect switch.
d) Disconnect the harness connector from the switch.
e) Check the resistance between implement filter bypass switch contact 1 and contact 2.

Result

Expected result - resistance is less than 5 ohms.

Results:

- Yes - resistance is less than 5 ohms.
- No - resistance is not less than 5 ohms.

  Replace the implement filter bypass switch.

3. Check the signal wire for an open circuit.
a) Turn the key start switch to the off position.

b) Turn the battery disconnect switch to the off position.
c) Remove the key from the battery disconnect switch.
d) Put a jumper wire from contact 1 to contact 2 at the implement filter bypass switch.
e) Check resistance from transmission module harness contact J1-27 to J1-21.

Result

Expected result - resistance is less than 5 ohms.

Results:

- Yes - resistance is less than 5 ohms.
- No - resistance is not less than 5 ohms.

  Repair or replace the harness.

4. Check the implement filter bypass switch for correct operation.
a) Connect the harness at the transmission module and implement filter bypass switch.
b) Turn the battery disconnect switch to the on position.
c) Turn the key start switch to the on position.
d) See the information for the hydraulic test and adjust section in the service manual to determine if switch operation is correct.

Result

Expected result - switch operation is not correct.

Results:

- Yes - switch operation is not correct.

  Replace the implement filter bypass switch.
- No - switch operation is correct.

5. Check if the diagnostic code remains.
a) Inspect and clean the harness connector contacts.
b) Connect all the connectors.
c) Turn the battery disconnect switch to the on position.
d) Turn the key start switch to the on position.
e) Operate the machine at low idle.
f) Check if the diagnostic code remains.

Result

Expected result - the diagnostic code is not active.

Results:

- Yes - SPN 1713 FMI 14 is not active.

  Stop.
- No - SPN 1713 FMI 14 is active.

  Failure of the transmission module is possible but not common. Exit the procedure and do the procedure again. If the diagnostic code remains active, replace the module.

  Stop.

10.6.63.1 Implement oil filter bypass switch electrical schematic

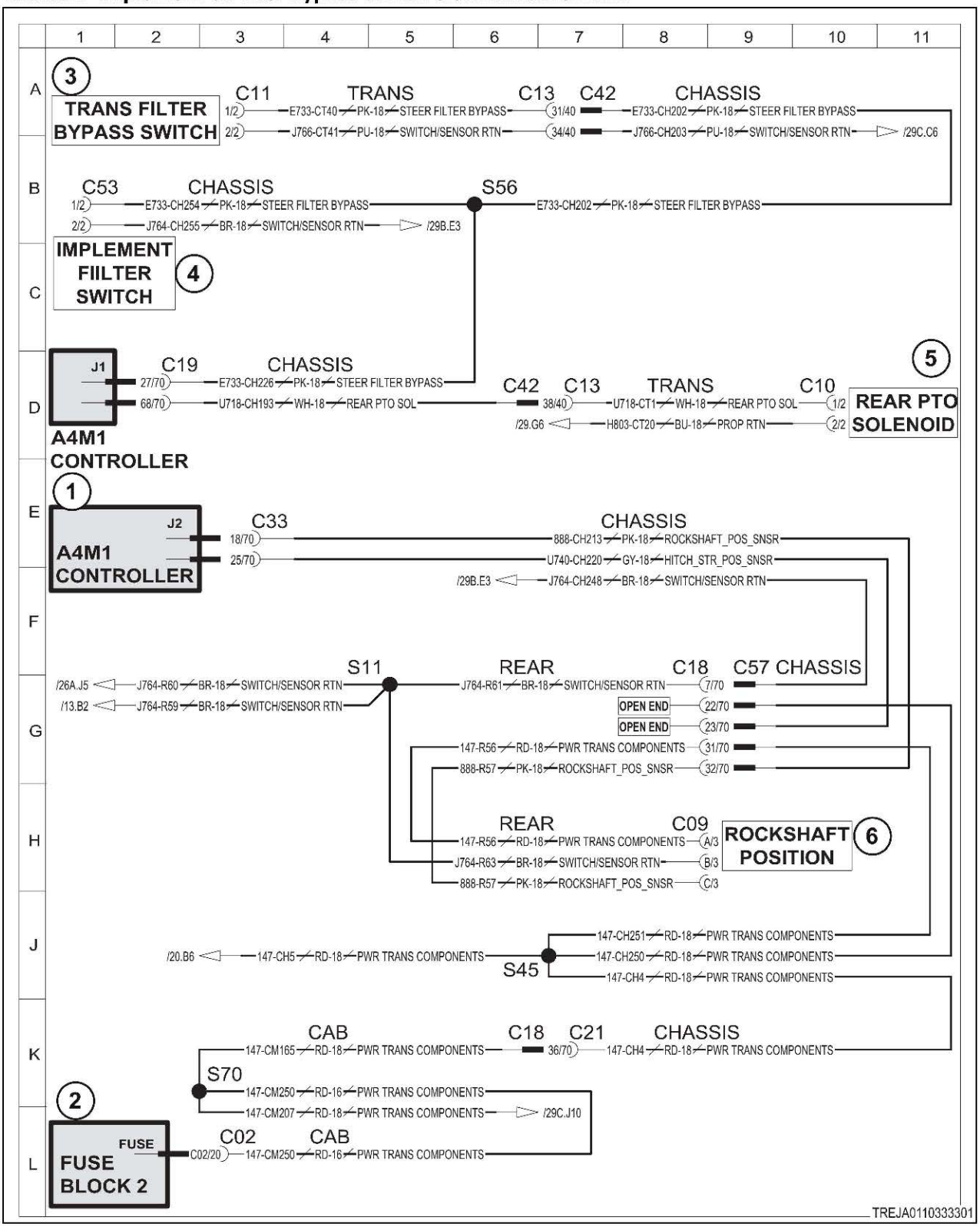

Fig. 208

Schematic legend		
Item	Schematic term	Description
1	A4M1 CONT	Transmission module
2	FUSE BLOCK 2	Fuse block 2
3	TRANS FILTER BYPASS SWITCH	Steering solenoid
4	IMPLEMENT FILTER SWITCH	Rear power take-off solenoid
5	REAR PTO SOLENOID	Rear PTO solenoid
6	ROCKSHAFT POSITION	Rockshaft position
--	CHASSIS	Chassis
--	REAR	Rear
--	PROP RTN	Proportional return
--	ON/OFF DRVR RTN	On/off driver return
--	ROCKSHAFT POSITION SENSOR	Rockshaft position sensor
--	STEERING FILTER BYPASS	Steering filter bypass
--	HITCH STR POS SNSR	Hitch steering position sensor
--	PWR TRANS COMPONENTS	Power to transmission components

10.6.64 Code SA 03 SPN 1713 FMI 31

The signal frequency or signal pulse width of the implement oil filter bypass switch sensor is not within range.

Diagnosis and solution

1. Check for power at the sensor.

a) Turn the key start switch to the off position.
b) Turn the battery disconnect switch to the off position.
c) Remove the key from the battery disconnect switch.
d) At the back of the harness connector for the implement oil filter bypass switch sensor, put a multimeter probe along the wire for contact 2.
e) Turn the battery disconnect switch to the on position.
f) Turn the key start switch to the on position.
g) Check the voltage from contact 2 to frame ground.

Result

Expected results - the voltage is 12 volts.

Results:

- Yes - the voltage is 12 volts.
- No - the voltage is not 12 volts.

  The harness is bad.

  Repair: Repair or replace the harness.

2. Check the implement oil filter bypass switch sensor.

a) Turn the key start switch to the off position.
b) Turn the battery disconnect switch to the off position.
c) Remove the key from the battery disconnect switch.
d) Disconnect the harness connector from the implement oil filter bypass switch sensor.
e) Check the resistance between contact 1 and contact 2 of the implement oil filter bypass switch.

Result

Expected results - the resistance is more than 5000 ohms.

Results:

- Yes - the resistance is more than 5000 ohms.
- No - the resistance is not more than 5000 ohms.

  The implement oil filter bypass switch sensor is bad.

  Repair: Replace the implement oil filter bypass switch.

3. Check the harness for short-circuit.

a) Turn the key start switch to the off position.
b) Turn the battery disconnect switch to the off position.
c) Remove the key from the battery disconnect switch.
d) Disconnect the harness connector from the implement oil filter bypass switch sensor.
e) Check the resistance between contact 1 and contact 2 of the harness connector.

Result

Expected results - the resistance is more than 5000 ohms.

Results:

- Yes - the resistance is more than 5000 ohms.
- No - the resistance is not more than 5000 ohms.

  The harness is bad.

  Repair: Repair or replace the harness.

4. Check the harness for open circuit.

a) Turn the key start switch to the off position.
b) Turn the battery disconnect switch to the off position.
c) Remove the key from the battery disconnect switch.
d) Disconnect the harness connector from the implement oil filter bypass switch sensor.
e) Check the resistance between contact 1 and contact 2 of the harness connector.

Result

Expected results - the resistance is less than 5 ohms.

Results:

- Yes - the resistance is less than 5 ohms.
- No - the resistance is not less than 5 ohms.

  The harness is bad.

  Repair: Repair or replace the harness.

5. Check if the diagnostic code remains.

a) Check and clean the harness connector contacts.
b) Connect all the connectors.
c) Turn the battery disconnect switch to the on position.
d) Turn the key start switch to the on position.
e) Operate the machine at low idle.
f) Check if the diagnostic code remains.

Result

Expected result - the diagnostic code is not active.

Results:

- Yes - SPN 1713 FMI 31 is not active.

  Stop.
- No - SPN 1713 FMI 31 is active.

  Failure of the transmission module is possible but not common. Exit the procedure and do the procedure again. If the diagnostic code remains active, replace the module.

  Stop.

10.6.64.1 Implement oil filter bypass switch electrical schematic

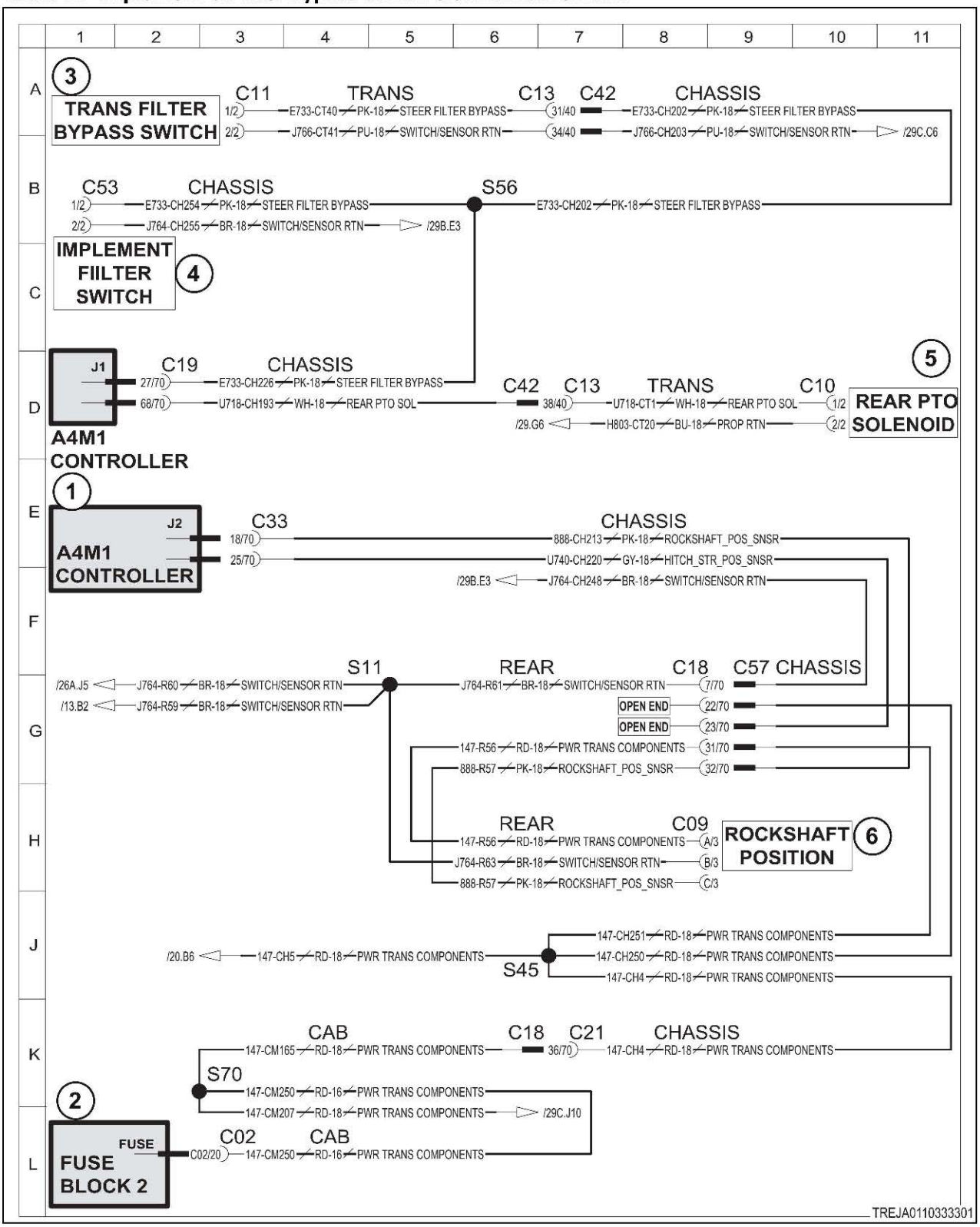

Fig. 209

Schematic legend		
Item	Schematic term	Description
1	A4M1 CONT	Transmission module
2	FUSE BLOCK 2	Fuse block 2
3	TRANS FILTER BYPASS SWITCH	Steering solenoid
4	IMPLEMENT FILTER SWITCH	Rear power take-off solenoid
5	REAR PTO SOLENOID	Rear PTO solenoid
6	ROCKSHAFT POSITION	Rockshaft position
--	CHASSIS	Chassis
--	REAR	Rear
--	PROP RTN	Proportional return
--	ON/OFF DRVR RTN	On/off driver return
--	ROCKSHAFT POSITION SENSOR	Rockshaft position sensor
--	STEERING FILTER BYPASS	Steering filter bypass
--	HITCH STR POS SNSR	Hitch steering position sensor
--	PWR TRANS COMPONENTS	Power to transmission components

10.6.65 Code SA 03 SPN 1873 FMI 00

The rear hitch position sensor signal is above normal range.

Diagnosis and solution

1. Check for power to the rockshaft position sensor.

a) Turn the key start switch to the off position.
b) Turn the battery disconnect switch to the off position.
c) Remove the key from the battery disconnect switch.
d) At the back of the harness connector for the rockshaft position sensor, put a multimeter probe along the wire for contact A.
e) Turn the battery disconnect switch to the on position.
f) Turn the key start switch to the on position.
g) Check the voltage from contact A to frame ground.

Result

Expected results - the voltage is 12 volts.

Results:

- Yes - the voltage is 12 volts.
- No - the voltage is not 12 volts.

  The harness is bad.

  Repair: Repair or replace the harness.

2. Check the harness for short-circuit.

a) Turn the key start switch to the off position.
b) Turn the battery disconnect switch to the off position.
c) Remove the key from the battery disconnect switch.
d) Disconnect the harness from the rockshaft position sensor.
e) Check the resistance between contact C and frame ground.

Result

Expected results - the resistance is more than 5000 ohms.

Results:

- Yes - the resistance is more than 5000 ohms.
- No - the resistance is not more than 5000 ohms.

  The harness is bad.

  Repair: Repair or replace the harness.

3. Check the rockshaft position sensor.

a) Turn the key start switch to the off position.
b) Turn the battery disconnect switch to the off position.
c) Remove the key from the battery disconnect switch.
d) Disconnect the harness from the rockshaft position sensor.
e) Check the voltage at contact C.

Result

Expected results - the voltage is 5 volts.

Results:

- Yes - the voltage is 5 volts.
- No - the voltage is not 5 volts.

  The rockshaft position sensor is bad.

  Repair: Repair or replace the rockshaft position sensor.

4. Check if the diagnostic code remains.

a) Check and clean the harness connector contacts.
b) Connect all the connectors.
c) Turn the battery disconnect switch to the on position.
d) Turn the key start switch to the on position.
e) Operate the machine at low idle.
f) Check if the diagnostic code remains.

Result

Expected result - the diagnostic code is not active.

Results:

- Yes - SPN 1873 FMI 00 is not active.

  Stop.
- No - SPN 1873 FMI 00 is active.

  Failure of the transmission module is possible but not common. Exit the procedure and do the procedure again. If the diagnostic code remains active, replace the module.

  Stop.

10.6.65.1 Implement oil filter bypass switch electrical schematic

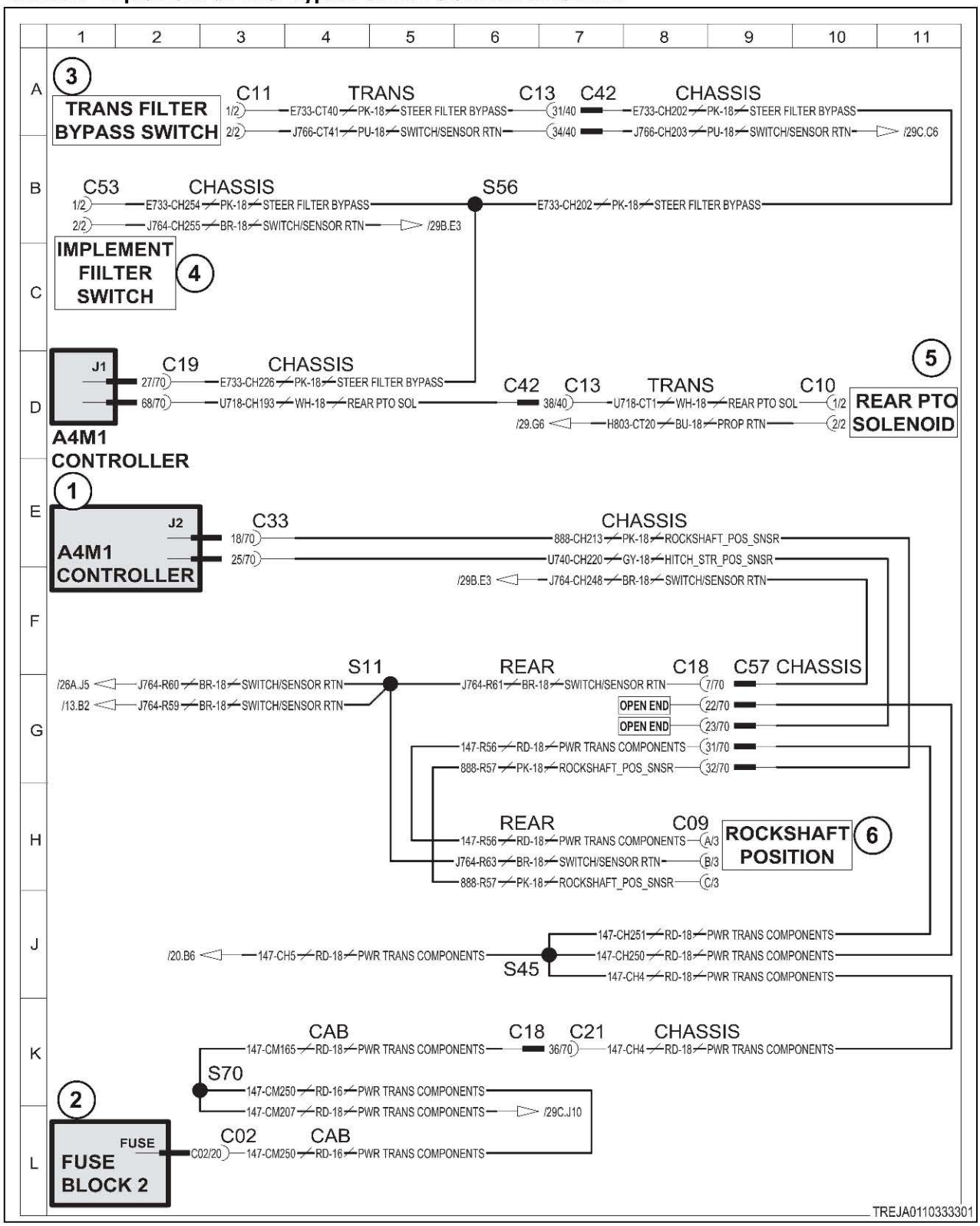

Fig. 210

Schematic legend		
Item	**Schematic term**	**Description**
1	A4M1 CONT	Transmission module
2	FUSE BLOCK 2	Fuse block 2
3	TRANS FILTER BYPASS SWITCH	Steering solenoid
4	IMPLEMENT FILTER SWITCH	Rear power take-off solenoid
5	REAR PTO SOLENOID	Rear PTO solenoid
6	ROCKSHAFT POSITION	Rockshaft position
--	CHASSIS	Chassis
--	REAR	Rear
--	PROP RTN	Proportional return
--	ON/OFF DRVR RTN	On/off driver return
--	ROCKSHAFT POSITION SENSOR	Rockshaft position sensor
--	STEERING FILTER BYPASS	Steering filter bypass
--	HITCH STR POS SNSR	Hitch steering position sensor
--	PWR TRANS COMPONENTS	Power to transmission components

10.6.66 Code SA 03 SPN 1873 FMI 01

The rear hitch position sensor signal is below normal range.

The transmission module is detecting the voltage produced by the hitch position sensor is too low. The position sensor uses Pulse Width Modulation (PWM) to simulate varying voltages by rapidly turning the output signal on and off. The duty cycle of this switching determines the "effective" voltage produced by the sensor. The likely cause of the fault is the hitch position sensor is misadjusted and the duty cycle is too low.

Diagnosis and solution

1. Check the position sensor duty cycle.

a) Turn the key start switch to the off position.
b) Turn the battery disconnect switch to the off position.
c) Connect the AGCO Electronics Diagnostic Tool (EDT) to the machine.
d) Turn the battery disconnect switch to the on position.
e) Turn the key start switch to the on position.
f) Monitor the duty cycle of the position sensor as the hitch is moved.
g) Fully raise and then fully lower the hitch.

Result

Expected result -

When the hitch is fully lowered the duty cycle should be between10% and 14%.

When the hitch is fully raised the duty cycle should be between 85% and 90%.

Results:

- The position sensor's duty cycle is within range for both lowered and raised positions.

  The mechanical position of the sensor is correct.

  Perform the calibration procedure to set the duty cycle limits in the transmission module.

  step 3 CALIBRATION **********

- The position sensor's duty cycle is out of range for either lowered or raised positions.

  Adjust the hitch position sensor's mechanical position.

  step 2 **********

2. Adjust the sensor mechanical position.

a) Make sure the machine is still running, and the AGCO EDT is still connected.
b) Lower the hitch to its lowest position.
c)
d) Check the sensor duty cycle.

Result

- The sensor duty cycle is below 10%.

  Shorten the sensor linkage (3).
- The sensor duty cycle is above 14%.

  Lengthen the sensor linkage (3).

e) Confirm the adjustment by cycling the hitch up and down while observing the duty cycle.

Result

- The sensor duty cycle goes below 10% or above 90%.

  Readjust the linkage length as necessary.
- The sensor cannot be adjusted to maintain the 10% to 90% duty cycle range.

  Replace the sensor and repeat the mechanical sdjustment.
- The sensor duty cycle remains between 10% and 90% for the full hitch height range.

  step 3 Calibrate **********.

3. Calibrate the hitch height position sensor.

a) Make sure the machine is still running and the AGCO EDT is still connected.
b) Select the service menu and calibration at the top of the screen.
c) Select rear hitch height sensor calibration.
d) Follow the screen prompts and perform the rear hitch height sensor calibration procedure.

Result

- The calibration completed without errors.

  step Validate **********
- The calibration is not successful.

  Check for additional SA 03 SPN 1873 FMI xx error codes and diagnose their conditions first.

  Repeat the duty cycle inspection

  step 1 DUTY CYCLE **********

4. Check if the diagnostic code remains.

a) Check and clean the harness connector contacts.
b) Connect all the connectors.
c) Turn the battery disconnect switch to the on position.
d) Turn the key start switch to the on position.
e) Operate the machine at low idle.
f) Check if the diagnostic code remains.

Result

Expected result - the diagnostic code is not active.

Results:

- Yes - SPN 1873 FMI 01 is not active.

  Stop.
- No - SPN 1873 FMI 01 is active.

  Failure of the transmission module is possible but not common. Exit the procedure and do the procedure again. If the diagnostic code remains active, replace the module.

  Stop.

10.6.66.1 Implement oil filter bypass switch electrical schematic

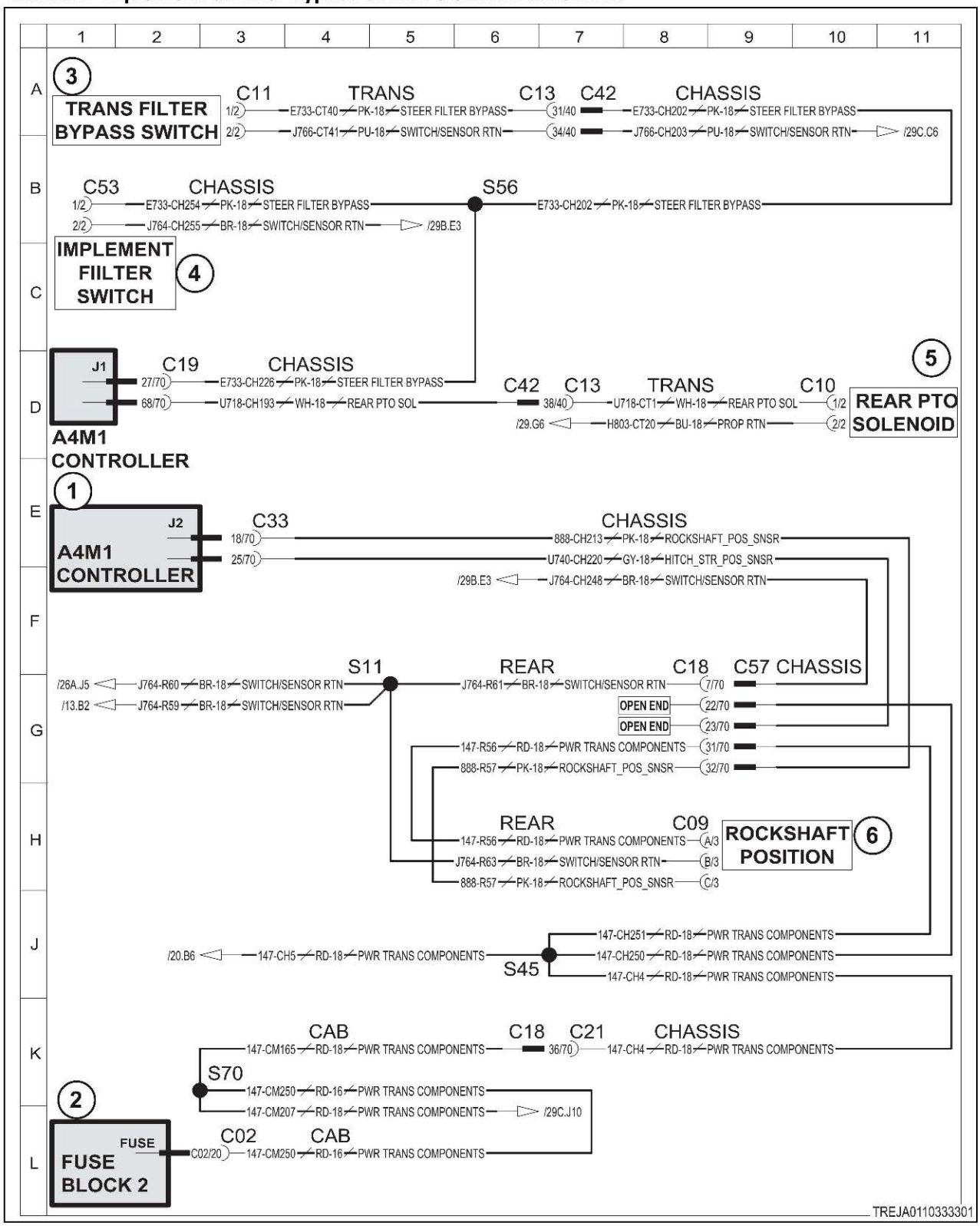

Fig. 211

Schematic legend		
Item	**Schematic term**	**Description**
1	A4M1 CONT	Transmission module
2	FUSE BLOCK 2	Fuse block 2
3	TRANS FILTER BYPASS SWITCH	Steering solenoid
4	IMPLEMENT FILTER SWITCH	Rear power take-off solenoid
5	REAR PTO SOLENOID	Rear PTO solenoid
6	ROCKSHAFT POSITION	Rockshaft position
--	CHASSIS	Chassis
--	REAR	Rear
--	PROP RTN	Proportional return
--	ON/OFF DRVR RTN	On/off driver return
--	ROCKSHAFT POSITION SENSOR	Rockshaft position sensor
--	STEERING FILTER BYPASS	Steering filter bypass
--	HITCH STR POS SNSR	Hitch steering position sensor
--	PWR TRANS COMPONENTS	Power to transmission components

10.6.67 Code SA 03 SPN 1873 FMI 08

The module has determined that the rear hitch position sensor signal frequency is not within normal range.

The transmission module is detecting abnormal frequency or pulses from the hitch height position sensor. The position sensor uses Pulse Width Modulation (PWM) to simulate varying voltages by rapidly turning the output signal on and off. Either the carrier frequency or modulated frequency are erratic. The likely cause of the fault is a loose connection or the inching pedal sensor is bad.

Diagnosis and solution

1. Determine when the error condition occurs.
   a) Raise and lower the hitch to various positions.
   b) Determine if the error condition is continuous or only under specific conditions.

   Result

   - The error is reported continuously and regardless of the position of the hitch.

     The likely cause is a loose connection or faulty sensor.

     See step 2 to inspect the connections
   - The error is reported only when the hitch is moved from one position to another, but not when held stationary.

     The most likely cause is the position sensor mounting screws or linkage are loose.

     Inspect the sensor hardware.

     Adjust the sensor's mechanical position.

     See step 3 to adjust the position

- Reporting of the error appears to be dependant on the position or movement of the hitch.

  The most likely cause is a faulty position sensor.

  Replace the sensor.

  Adjust the sensor's mechanical position.

  See step 3 to adjust the position

2. Inspect all harness and sensor connections.

a) Turn the key start switch to the off position.

b) Turn the battery disconnect switch to the off position.

c) Inspect and clean all connectors and connector contacts:

- Look for bent or worn pins.
- Look for deformed or oversized sockets.
- Look for corrosion on the pins and sockets. Corrosion is a sign of a loose connection.
- Look for signs of overheating. Overheating is a sign of a poor connection, and can further loosen the pin or socket mount. The whole connector body should be replaced.

d) Make sure to inspect the following connector locations:

- Fuse Block 2, contact C2.
- Hitch (Rockshaft) position sensor connector.
- Transmission module J1 connector, contact J1-21.
- Transmission module J2 connector, contact J2-18.

e) Repair or replace any connector or harness found faulty.

f) Verify the repairs by operating the machine and hitch position.

Result

- The error code cleared.

  Stop.
- The error code persists.

  Replace the hitch height position sensor.

  Adjust the sensor's mechanical position.

  See step 3 to adjust the position

3. Adjust the sensor mechanical position.

a) Make sure the machine is still running, and the AGCO EDT is still connected.

b) Lower the hitch to its lowest position.

c)

d) Check the sensor duty cycle.

Result

- The sensor duty cycle is below 10%.

  Shorten the sensor linkage (3).
- The sensor duty cycle is above 14%.

  Lengthen the sensor linkage (3).

e) Confirm the adjustment by cycling the hitch up and down while observing the duty cycle.

Result

- The sensor duty cycle goes below 10% or above 90%.

  Readjust the linkage length as necessary.

- The sensor cannot be adjusted to maintain the 10% to 90% duty cycle range.

  Replace the sensor and repeat the mechanical sdjustment.
- The sensor duty cycle remains between 10% and 90% for the full hitch height range.

  See step 4 to calibrate the sensor.

4. Calibrate the hitch height position sensor.

a) Make sure the machine is still running and the AGCO EDT is still connected.
b) Select the service menu and calibration at the top of the screen.
c) Select rear hitch height sensor calibration.
d) Follow the screen prompts and perform the rear hitch height sensor calibration procedure.

Result

- The calibration completed without errors.

  See step 5 to validate the repair
- The calibration is not successful.

  Replace the hitch height position sensor.

  See step 5 to validate the repair

5. Check if the diagnostic code remains.

a) Check and clean the harness connector contacts.
b) Connect all the connectors.
c) Turn the battery disconnect switch to the on position.
d) Turn the key start switch to the on position.
e) Operate the machine at low idle.
f) Check if the diagnostic code remains.

Result

- SPN 1873 FMI 08 is not active.

  Stop.
- SPN 1873 FMI 08 is active.

  Failure of the transmission module is possible but not common. Exit the procedure and do the procedure again. If the diagnostic code remains active, replace the module.

  Stop.

10.6.67.1 Implement oil filter bypass switch electrical schematic

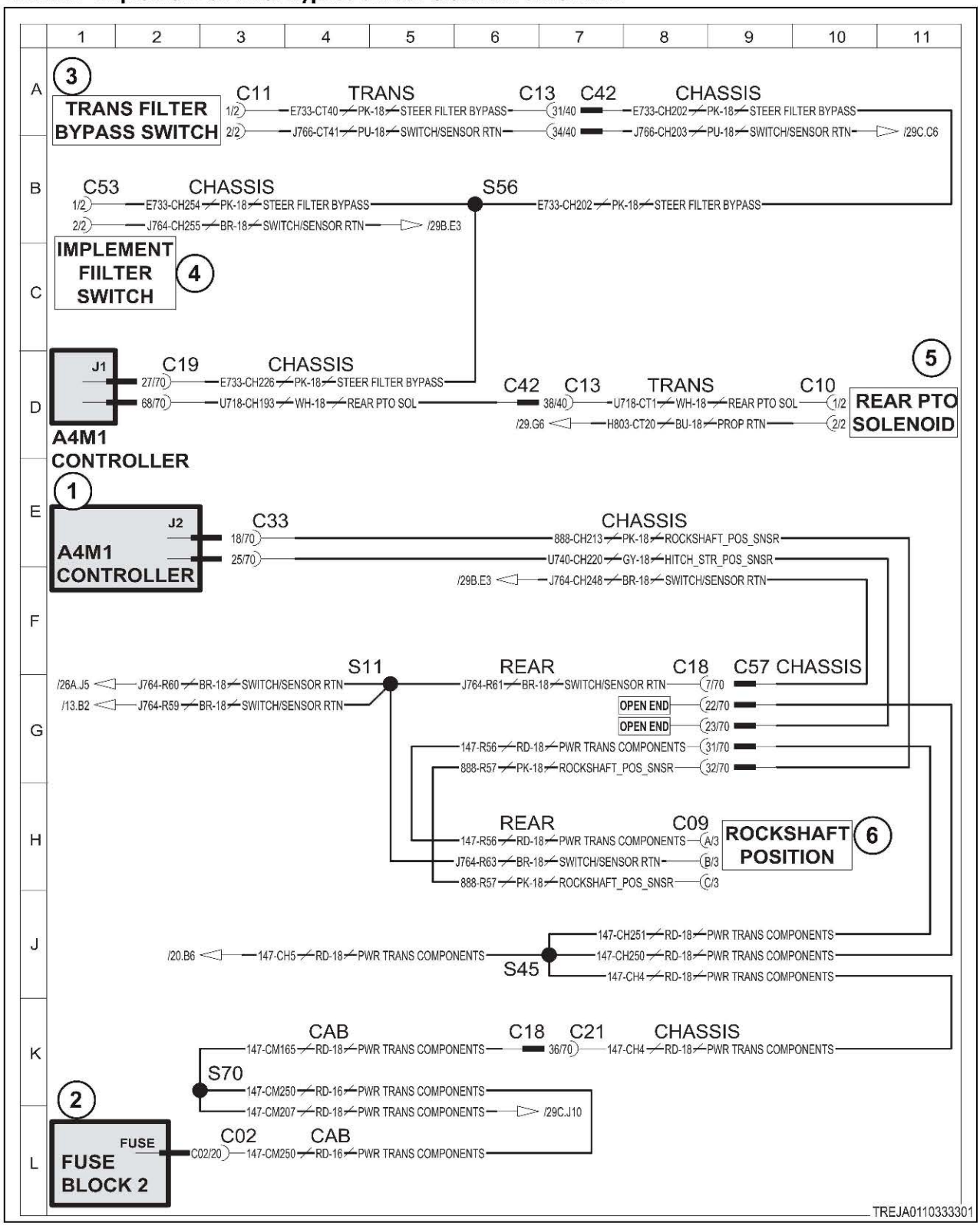

Fig. 212

Schematic legend		
Item	Schematic term	Description
1	A4M1 CONT	Transmission module
2	FUSE BLOCK 2	Fuse block 2
3	TRANS FILTER BYPASS SWITCH	Steering solenoid
4	IMPLEMENT FILTER SWITCH	Rear power take-off solenoid
5	REAR PTO SOLENOID	Rear PTO solenoid
6	ROCKSHAFT POSITION	Rockshaft position
--	CHASSIS	Chassis
--	REAR	Rear
--	PROP RTN	Proportional return
--	ON/OFF DRVR RTN	On/off driver return
--	ROCKSHAFT POSITION SENSOR	Rockshaft position sensor
--	STEERING FILTER BYPASS	Steering filter bypass
--	HITCH STR POS SNSR	Hitch steering position sensor
--	PWR TRANS COMPONENTS	Power to transmission components

10.6.68 Code SA 03 SPN 1873 FMI 12

The module has detected that there is no information from the hitch position sensor or the information is not correct.

The transmission module is detecting no signal or an out of range signal from the hitch height position sensor. The position sensor uses Pulse Width Modulation (PWM) to simulate varying voltages by rapidly turning the output signal on and off. The signal is either static or absent. The likely cause of the fault is an open circuit, short circuit, or faulty sensor.

Diagnosis and solution

1. Check for battery power at the sensor.

a) Turn the key start switch to the on position.

b) Check if the inching pedal sensor is also reporting an error (SA 03 SPN 684 FMI xx).

Result

- Yes.

  Replace the fuse in fuse block 2, position C2.

  See step 4 to calibrate the sensor and validate the repair.
- No.

  Continue.

c) Check for 12-volt power between contacts A and B of the sensor connector.

Result

- 12 volts is present.

  See step 2 to check the sensor signal circuit.
- 12 volts is not present.

  Continue.

d) Check for 12-volt power between contact 36 at the chassis to cab harness connector, and chassis ground. (Contact 30 may also be used as a ground.)

Result

- 12 volts is present at the connector.

  An open circuit exists in the chassis harness, 12-volt power.

  Repair or replace the chassis harness.

  See step 4 to calibrate the sensor and validate the repair.
- 12 volts is not present at the connector.

  An open circuit exists in the cab harness leading to fuse block 2.

  Repair or replace the cab harness.

  See step 4 to calibrate the sensor and validate the repair.

2. Check the sensor signal voltage.

a) Make sure the machine is still on.
b) Raise the hitch to its highest position.
c) Check the voltage between contacts B and C at the sensor connector.

Result

The voltage range should be 0.5 to 4.5 volts. With the hitch raised the voltage should be at or near 4.5 volts.

- The voltage is at or near 0 volts.

  Either the sensor is bad or the signal wire is shorted to ground.

  See step 3 to check for a short circuit.
- The voltage is low, but not 0 volts.

  Replace the sensor.

  See step 4 to calibrate the sensor and validate the repair.
- The voltage is at or near 4.5 volts.

  The sensor is working correctly.

  Continue.

d) Check the voltage between contacts J2-18 and J1-21 at the transmission module connectors.

Result

The voltage range should be 0.5 to 4.5 volts. With the hitch raised the voltage should be at or near 4.5 volts.

- The voltage is at or near 0 volts.

  Voltage was present at the sensor but absent at the module. The harness is open-circuit.

  Repair or replace the chassis harness.

  See step 4 to calibrate the sensor and validate the repair.
- The voltage is at or near 4.5 volts.

  If voltage is present and the module continues to report an error, then the module is at fault.

  Replace the module.

  See step 4 to calibrate the sensor and validate the repair.

3. Check for a short circuit in the harness.

a) Turn the key start switch to the off position.
b) Turn the battery disconnect switch to the off position.
c) Disconnect the hitch position sensor.

d) Disconnect both transmission connectors J1 and J2. (This circuit passes through both connectors.)
e) Check the resistance from contact J2-18 to all other J1 and J2 contacts.

Result

- All resistance measurements are high (more than 1000 ohms).

  The harness is not shorted, but no voltage was present at the sensor. The sensor is at fault.

  Replace the sensor.

  See step 4 to calibrate the sensor and validate the repair.
- One or more resistance measurements are at or near 0 ohms.

  Repair or replace the harness.

  See step 4 to calibrate the sensor and validate the repair.

4. Calibrate the hitch height position sensor.
a) Connect the AGCO EDT module to the machine.
b) Turn the key start switch to the on position.
c) Select the service menu and calibration at the top of the screen.
d) Select rear hitch height sensor calibration.
e) Follow the screen prompts and perform the rear hitch height sensor calibration procedure.
f) Check if the diagnostic code remains.

Result

- SPN 1873 FMI 12 is not active.

  stop.
- SPN 1873 FMI 12 is active.

  Failure of the transmission module is possible but not common. Exit the procedure and do the procedure again. If the diagnostic code remains active, replace the module.

  stop.

10.6.68.1 Implement oil filter bypass switch electrical schematic

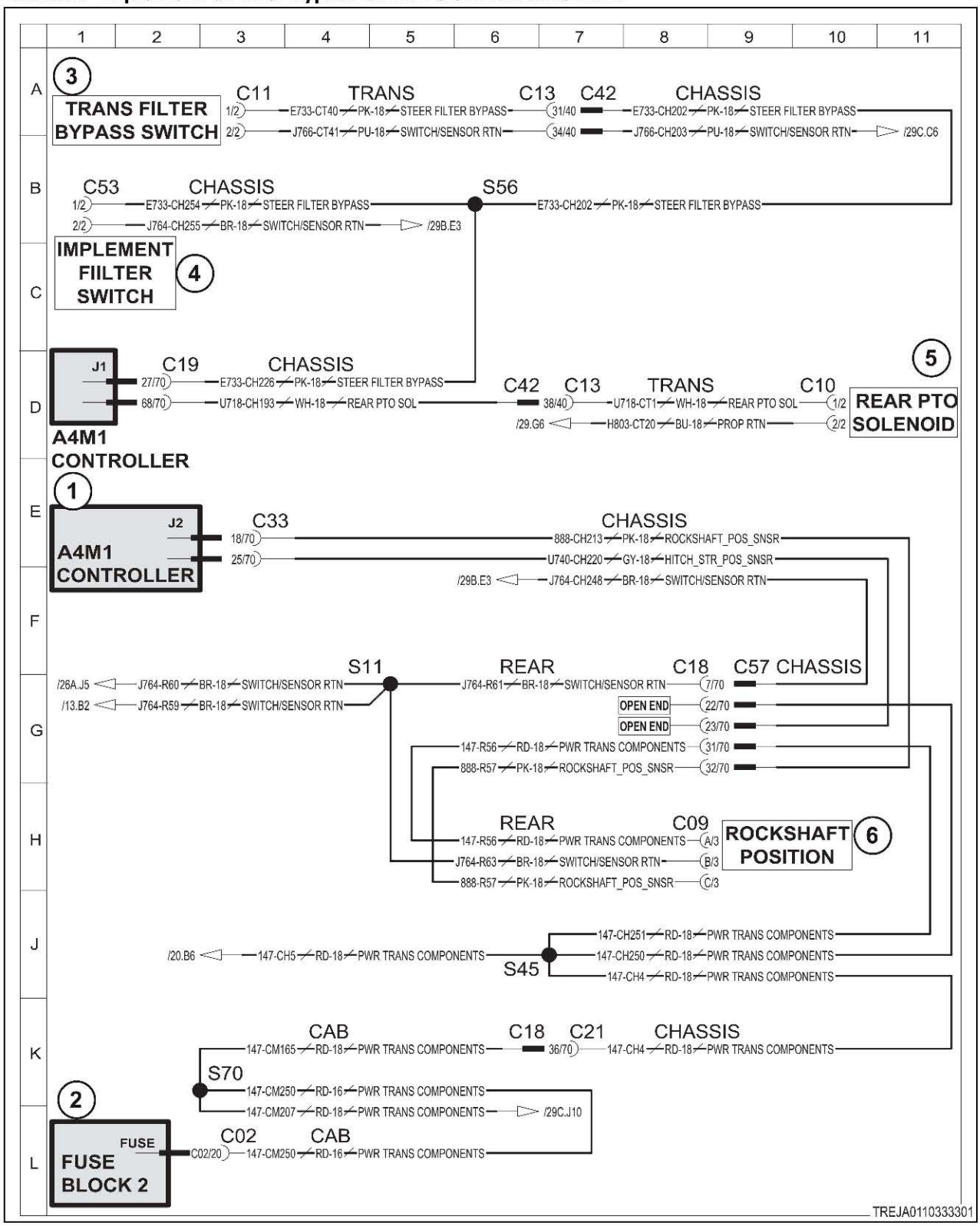

Fig. 213

Schematic legend		
Item	**Schematic term**	**Description**
1	A4M1 CONT	Transmission module
2	FUSE BLOCK 2	Fuse block 2
3	TRANS FILTER BYPASS SWITCH	Steering solenoid
4	IMPLEMENT FILTER SWITCH	Rear power take-off solenoid
5	REAR PTO SOLENOID	Rear PTO solenoid
6	ROCKSHAFT POSITION	Rockshaft position
--	CHASSIS	Chassis
--	REAR	Rear
--	PROP RTN	Proportional return
--	ON/OFF DRVR RTN	On/off driver return
--	ROCKSHAFT POSITION SENSOR	Rockshaft position sensor
--	STEERING FILTER BYPASS	Steering filter bypass
--	HITCH STR POS SNSR	Hitch steering position sensor
--	PWR TRANS COMPONENTS	Power to transmission components

10.6.69 Code SA 03 SPN 1873 FMI 13

The module has detected that the hitch position sensor is out of calibration.

Diagnosis and solution

Calibrate the hitch height position sensor.

a) Connect the AGCO Electronics Diagnostic Tool (EDT) to the machine.
b) Turn the key start switch to the on position.
c) Select the service menu and calibration at the top of the screen.
d) Select rear hitch height sensor calibration.
e) Follow the screen prompts and perform the rear hitch height sensor calibration procedure.
f) Check the status of SPN 1873 FMI 13.

Result

- SPN 1873 FMI 13 is not active.

  Stop.
- SPN 1873 FMI 13 is active.

  Make sure the module and the software are correct.

  Failure of the transmission module is possible but not common. Exit the procedure and do the procedure again. If the diagnostic code remains active, replace the module.

  Stop.

10.6.69.1 Implement oil filter bypass switch electrical schematic

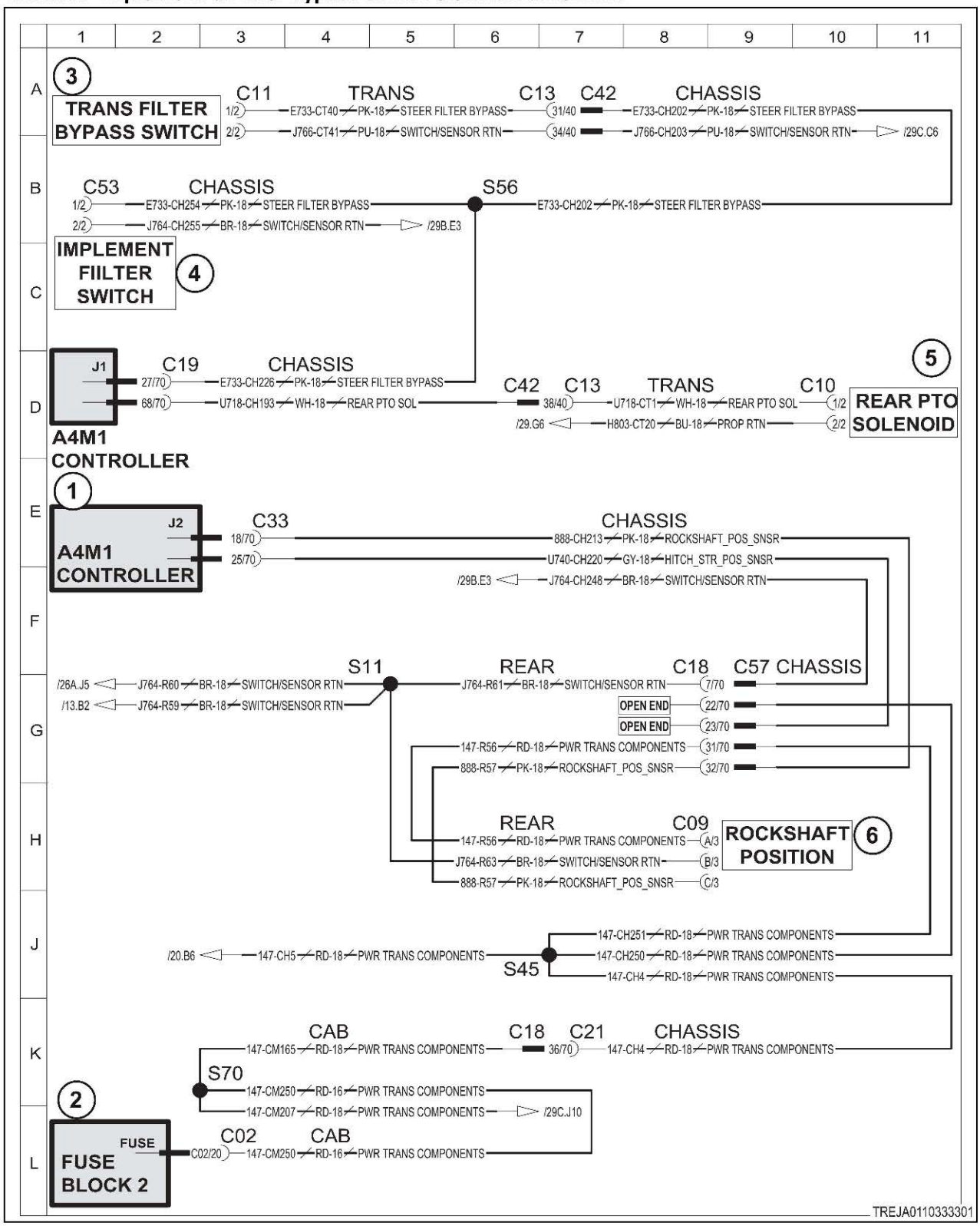

Fig. 214

Schematic legend		
Item	**Schematic term**	**Description**
1	A4M1 CONT	Transmission module
2	FUSE BLOCK 2	Fuse block 2
3	TRANS FILTER BYPASS SWITCH	Steering solenoid
4	IMPLEMENT FILTER SWITCH	Rear power take-off solenoid
5	REAR PTO SOLENOID	Rear PTO solenoid
6	ROCKSHAFT POSITION	Rockshaft position
--	CHASSIS	Chassis
--	REAR	Rear
--	PROP RTN	Proportional return
--	ON/OFF DRVR RTN	On/off driver return
--	ROCKSHAFT POSITION SENSOR	Rockshaft position sensor
--	STEERING FILTER BYPASS	Steering filter bypass
--	HITCH STR POS SNSR	Hitch steering position sensor
--	PWR TRANS COMPONENTS	Power to transmission components

10.6.70 Code SA 03 SPN 1883 FMI 13

Power take-off speed is above the normal limit.

Diagnosis solution

Reduce engine RPM.

a) Reduce engine speed below 1980 RPM.
b) Check to see if SPN 1883 FMI 13 is active.

Result

Expected result - SPN 1883 FMI 13 is not active.

Results:

- Yes - SPN 1883 FMI 13 is not active.

  Stop.
- No - SPN 1883 FMI 13 is active.

  Failure of the transmission module is possible but not common. Exit the procedure and do the procedure again. If the diagnostic code remains active, replace the module.

  Stop.

10.6.70.1 Implement oil filter bypass switch electrical schematic

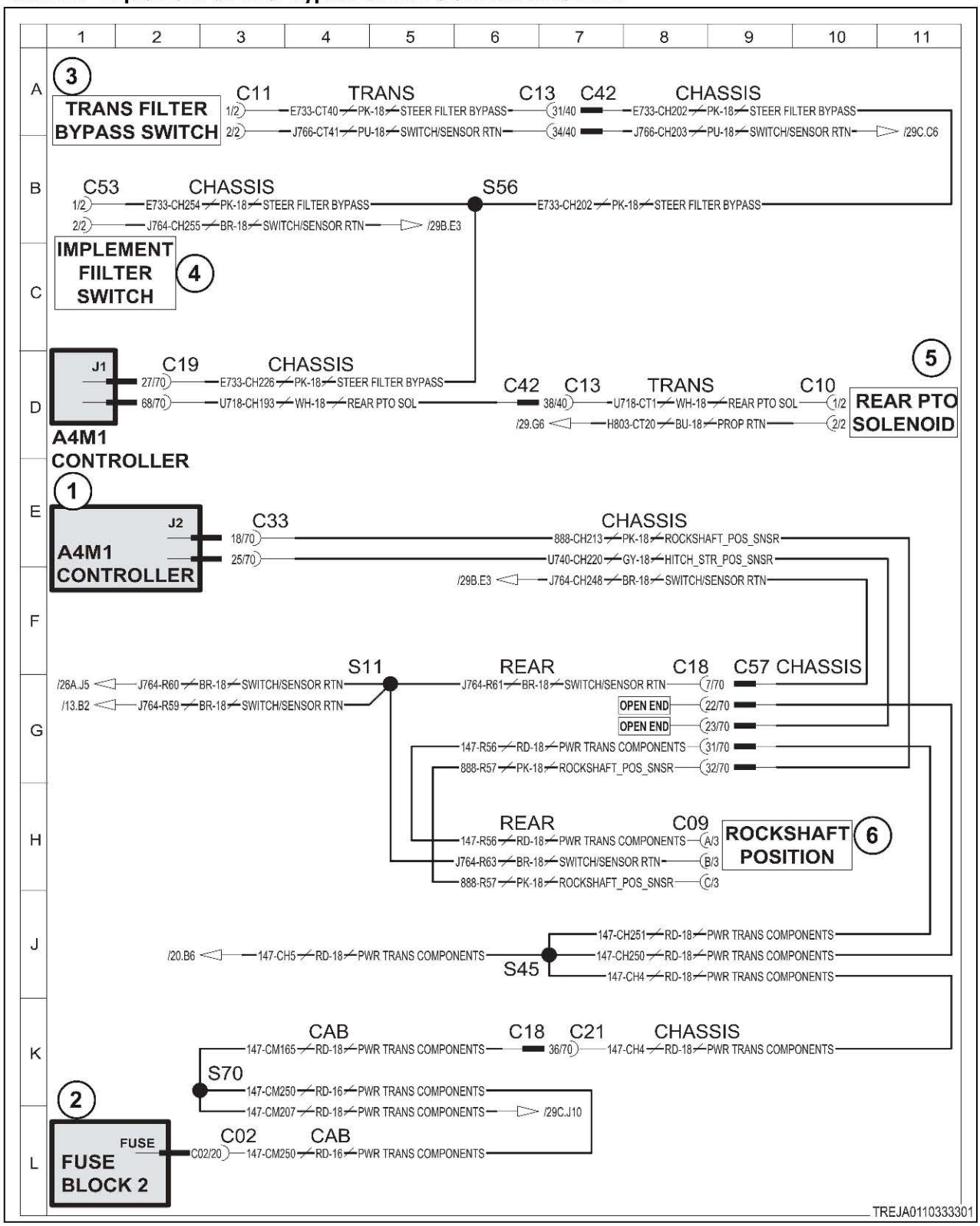

Fig. 215

Schematic legend		
Item	Schematic term	Description
1	A4M1 CONT	Transmission module
2	FUSE BLOCK 2	Fuse block 2
3	TRANS FILTER BYPASS SWITCH	Steering solenoid
4	IMPLEMENT FILTER SWITCH	Rear power take-off solenoid
5	REAR PTO SOLENOID	Rear PTO solenoid
6	ROCKSHAFT POSITION	Rockshaft position
--	CHASSIS	Chassis
--	REAR	Rear
--	PROP RTN	Proportional return
--	ON/OFF DRVR RTN	On/off driver return
--	ROCKSHAFT POSITION SENSOR	Rockshaft position sensor
--	STEERING FILTER BYPASS	Steering filter bypass
--	HITCH STR POS SNSR	Hitch steering position sensor
--	PWR TRANS COMPONENTS	Power to transmission components

10.6.71 Code SA 03 SPN 2000 FMI 02

The module detects that the communication from the engine control module is erratic, intermittent, or not correct.

Diagnosis and solution

1. Check the hardware and software part numbers.

a) Check that the following information is correct:

- Part numbers for modules.
- Part numbers of flash software for modules.

Result

Expected results - the part numbers and software are correct.

Results:

- Yes - the part numbers and software are correct.
- No - the part numbers or software are not correct.

  Repair: If the module part number is not correct replace the module with the correct module and flash the module with the correct software. If the module part number is correct, flash the module with the correct software.

2. Check the harness connections.

a) Turn the key start switch to the off position.
b) Turn the battery disconnect switch to the off position.
c) Remove the key from the battery disconnect switch.
d) Make sure all connectors of the harness are clean, not damaged, and are tightly connected.

Result

Expected results - the harness connectors are clean, not damaged, and tightly connected.

Results:

- Yes - the harness connectors are clean, not damaged, and tightly connected.
- No - the harness connectors are not clean, damaged, or not tightly connected.

  The harness is bad.

  Repair: Repair or replace the harness.

3. Check the harness for 12 volt power from battery.

a) Turn the key start switch to the off position.
b) Turn the battery disconnect switch to the off position.
c) Remove the key from the battery disconnect switch.
d) Disconnect the J1 and J2 connectors from the transmission module.
e) Turn the battery disconnect switch to the on position.
f) Turn the key start switch to the on position.
g) Check the voltage at contacts 31, 38, and 39 of the J1 connector.

Result

Expected results - the voltage is 12 volts.

Results:

- Yes - the voltage is 12 volts.
- No - the voltage is not 12 volts.

  Go to step 6.

4. Check the harness for short-circuit to ground.

a) Turn the key start switch to the off position.
b) Turn the battery disconnect switch to the off position.
c) Remove the key from the battery disconnect switch.
d) Disconnect the J1 and J2 connectors from the transmission module.
e) Check the resistance between contact 67 of the J2 connector and all the other contacts in the J2 connector.
f) Check the resistance between contact 68 of the J2 connector and all the other contacts in the J2 connector.

Result

Expected results - the resistance is more than 5000 ohms.

Results:

- Yes - the resistance is more than 5000 ohms.
- No - the resistance is not more than 5000 ohms.

  The harness is bad.

  Repair: Repair or replace the harness.

5. Check the harness for open circuit.

a) Turn the key start switch to the off position.
b) Turn the battery disconnect switch to the off position.
c) Remove the key from the battery disconnect switch.
d) Disconnect the harness from the engine module.
e) Disconnect the harness from the transmission module.
f) Put a jumper wire between contacts 44 and 45 of the engine module connector.
g) Check the resistance between contacts 67 and 68 of the transmission module connector J2.

Result

Expected results - the resistance is less than 5 ohms.

Results:

- Yes - the resistance is less than 5 ohms.
- No - the resistance is not less than 5 ohms.

  The harness is bad.

  Repair: Repair or replace the harness.

6. Check the fuse.

a) Turn the key start switch to the off position.
b) Turn the battery disconnect switch to the off position.
c) Remove the key from the battery disconnect switch.
d) Check the fuse for transmission power.

Result

Expected results - the fuse is good.

Results:

- Yes - the fuse is good.
- No - the fuse is not good.

  Repair: Replace the fuse.

7. Check if the diagnostic code remains.

a) Check the contacts of the connectors and clean the contacts.
b) Connect all the connectors.
c) Turn the battery disconnect switch to the on position.
d) Turn the key start switch to the on position.
e) Turn on the engine.
f) Operate the engine at high idle.
g) Check if the diagnostic code remains.

Result

Expected result - the diagnostic code is not active.

Results:

- Yes - SPN 2000 FMI 02 is not active.

  Stop.
- No - SPN 2000 FMI 02 is active.

  Failure of the transmission module is possible but not common. Exit the procedure and do the procedure again. If the diagnostic code remains active, replace the module.

  Stop.

10.6.71.1 CAN electrical schematic

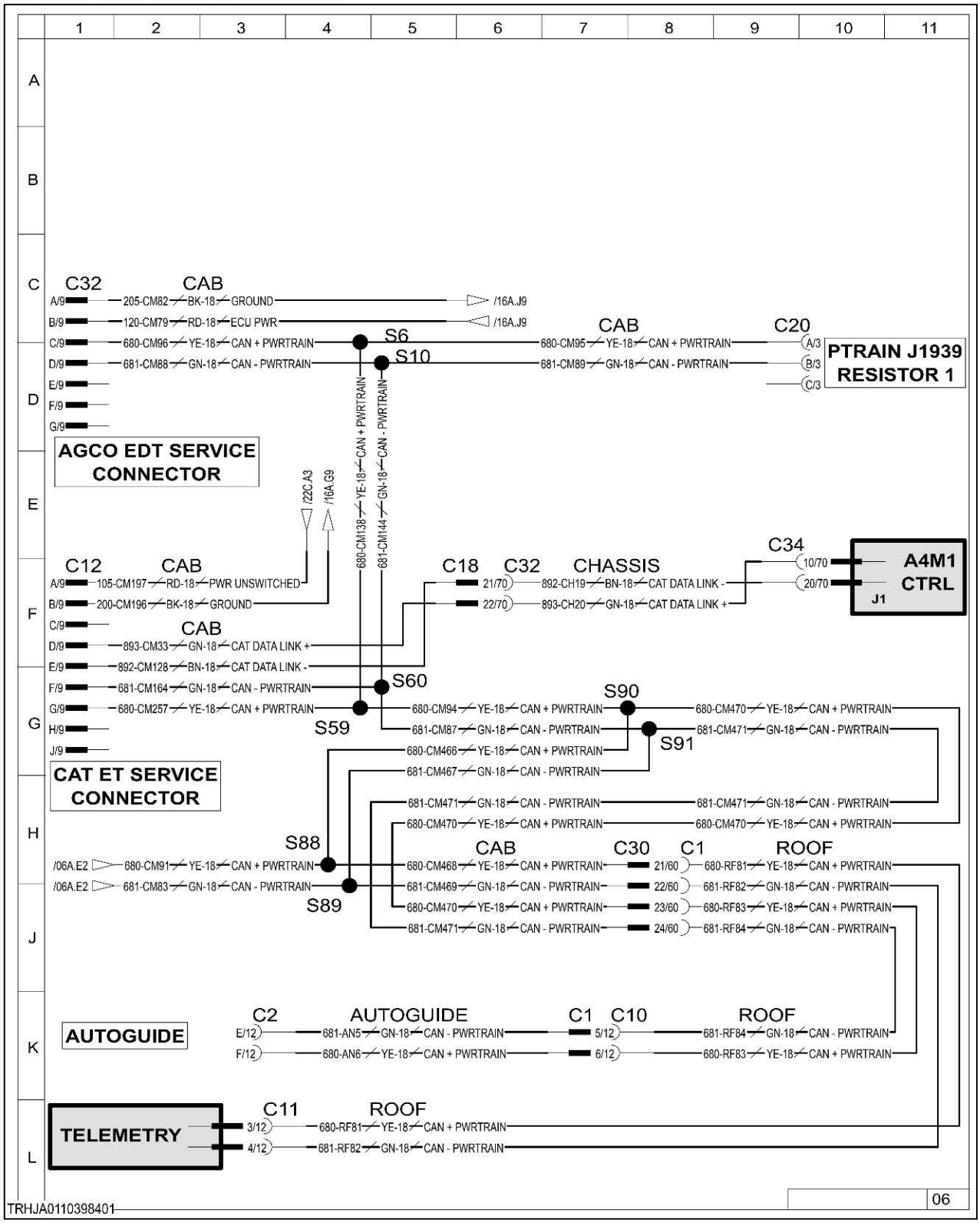

Fig. 216

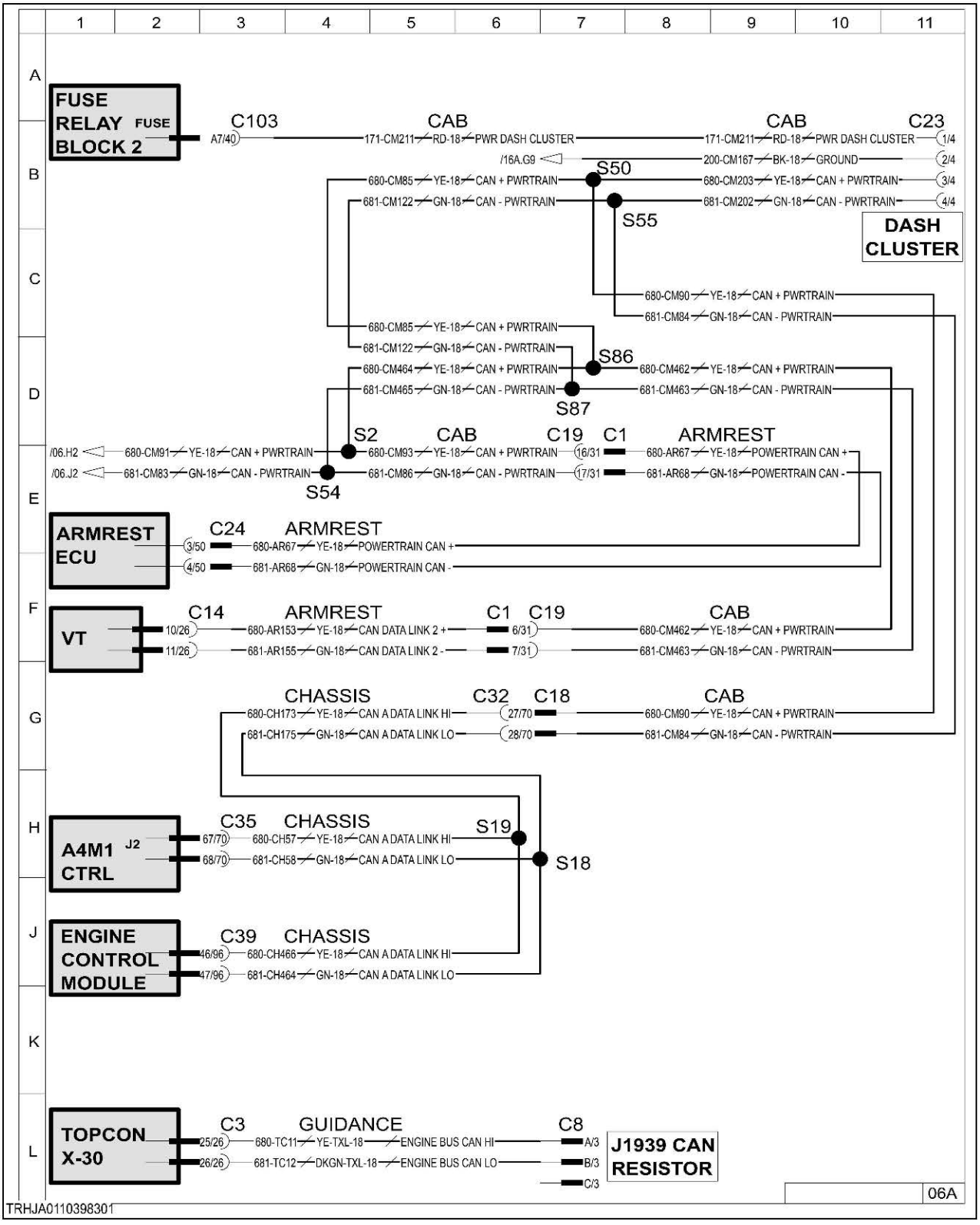
FUSE RELAY BLOCK 2
FUSE
C103
A7/40
CAB
171-CM211 RD-18 PWR DASH CLUSTER
CAB
C23
1/4
/16A.G9
200-CM167 BK-18 GROUND
2/4
S50
680-CM85 YE-18 CAN + PWRTRAIN
680-CM203 YE-18 CAN + PWRTRAIN
3/4
681-CM122 GN-18 CAN - PWRTRAIN
681-CM202 GN-18 CAN - PWRTRAIN
4/4
S55
DASH CLUSTER
680-CM90 YE-18 CAN + PWRTRAIN
681-CM84 GN-18 CAN - PWRTRAIN
680-CM85 YE-18 CAN + PWRTRAIN
681-CM122 GN-18 CAN - PWRTRAIN
S86
680-CM464 YE-18 CAN + PWRTRAIN
680-CM462 YE-18 CAN + PWRTRAIN
681-CM465 GN-18 CAN - PWRTRAIN
681-CM463 GN-18 CAN - PWRTRAIN
S87
S2
CAB
C19
C1
ARMREST
/06.H2
680-CM91 YE-18 CAN + PWRTRAIN
680-CM93 YE-18 CAN + PWRTRAIN
16/31
680-AR67 YE-18 POWERTRAIN CAN +
/06.J2
681-CM83 GN-18 CAN - PWRTRAIN
681-CM86 GN-18 CAN - PWRTRAIN
17/31
681-AR68 GN-18 POWERTRAIN CAN -
S54
ARMREST ECU
C24
ARMREST
3/50
680-AR67 YE-18 POWERTRAIN CAN +
4/50
681-AR68 GN-18 POWERTRAIN CAN -
VT
C14
ARMREST
C1
C19
CAB
10/26
680-AR153 YE-18 CAN DATA LINK 2 +
6/31
680-CM462 YE-18 CAN + PWRTRAIN
11/26
681-AR155 GN-18 CAN DATA LINK 2 -
7/31
681-CM463 GN-18 CAN - PWRTRAIN
CHASSIS
C32
C18
CAB
680-CH173 YE-18 CAN A DATA LINK HI
27/70
680-CM90 YE-18 CAN + PWRTRAIN
681-CH175 GN-18 CAN A DATA LINK LO
28/70
681-CM84 GN-18 CAN - PWRTRAIN
A4M1 CTRL
J2
C35
CHASSIS
S19
67/70
680-CH57 YE-18 CAN A DATA LINK HI
68/70
681-CH58 GN-18 CAN A DATA LINK LO
S18
ENGINE CONTROL MODULE
C39
CHASSIS
46/96
680-CH466 YE-18 CAN A DATA LINK HI
47/96
681-CH464 GN-18 CAN A DATA LINK LO
TOPCON X-30
C3
GUIDANCE
C8
25/26
680-TC11 YE-TXL-18 ENGINE BUS CAN HI
A/3
26/26
681-TC12 DKGN-TXL-18 ENGINE BUS CAN LO
B/3
C/3
J1939 CAN RESISTOR
06A
TRHJA0110398301

Fig. 217

10.6.71.2 Transmission input shaft speed sensor electrical schematic

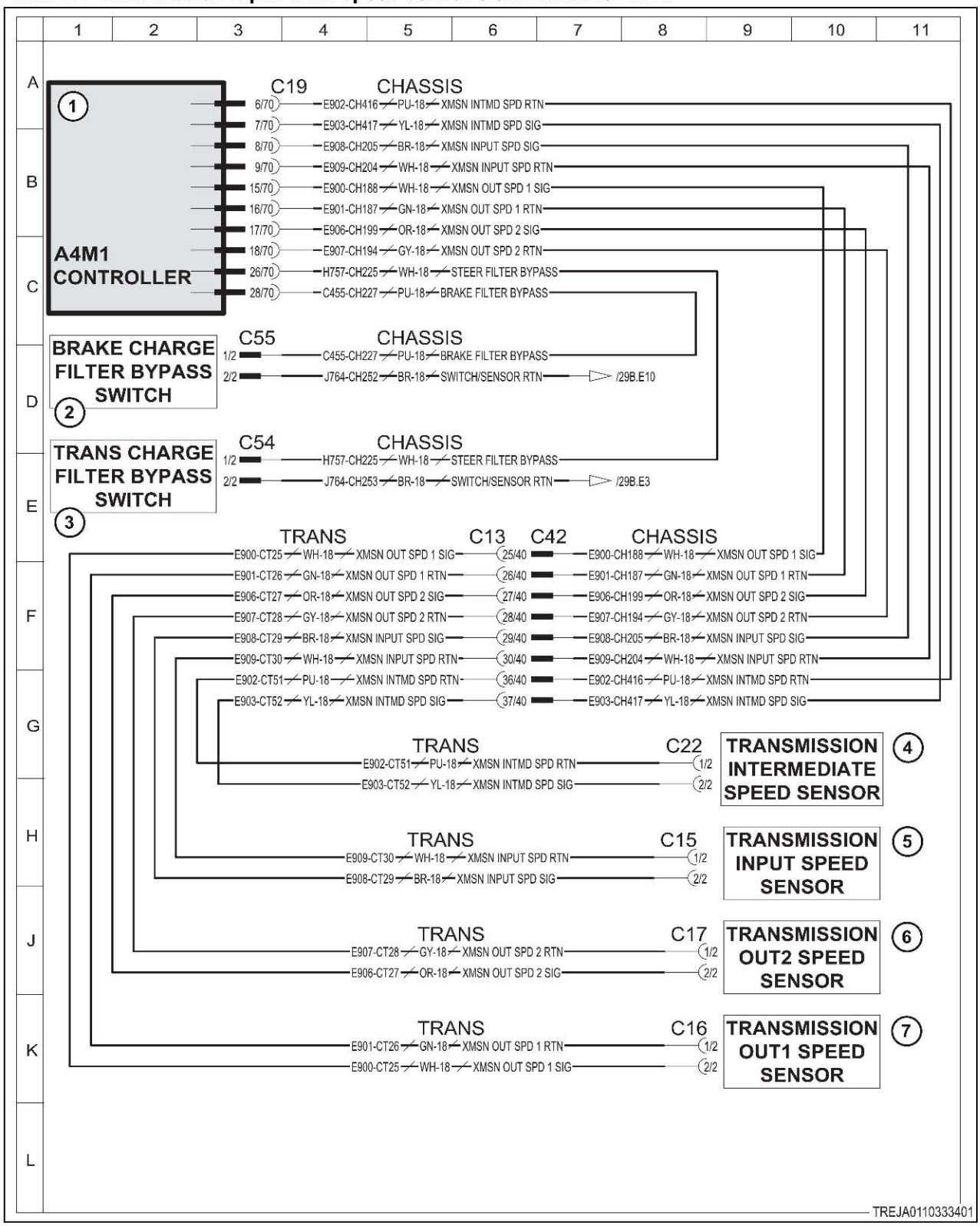

Fig. 218

Schematic legend		
Item	Schematic term	Description
1	A4M1 CONT	Transmission module
2	BRAKE CHARGE FILTER BYPASS SWITCH	Brake charge filter bypass switch
3	TRANS CHARGE FILTER BYPASS SWITCH	Transmission charge filter bypass switch
4	TRANSMISSION INTERMEDIATE SPEED SENSOR	Transmission intermediate speed sensor
5	TRANSMISSION INPUT SPEED SENSOR	Transmission input speed sensor
6	TRANSMISSION OUT 2 SPEED SENSOR	Transmission output speed sensor 2
7	TRANSMISSION OUT 1 SPEED SENSOR	Transmission output speed sensor 1
--	STEERING FILTER BYPASS	Steering filter bypass
--	BRAKE FILTER BYPASS	Brake filter bypass
--	SWITCH/SENSOR RTN	Switch/sensor return
--	XMSN OUT SPD SIG	Transmission output speed signal
--	XMSN OUT SPD RTN	Transmission output speed return
--	XMSN INPUT SPD RTN	Transmission input speed return
--	XMSN INPUT SPD SIG	Transmission input speed signal

10.6.72 Code SA 03 SPN 2005 FMI 02

The module detects that the armrest module communication is erratic, intermittent, or not correct.

Diagnosis and solution

1. Check the hardware and software part numbers.

a) Check that the following information is correct:

- Part numbers for modules.
- Part numbers of flash software for modules.

Result

Expected results - the part numbers and software are correct.

Results:

- Yes - the part numbers and software are correct.
- No - the part numbers or software are not correct.

  Repair: If the module part number is not correct replace the module with the correct module and flash the module with the correct software. If the module part number is correct, flash the module with the correct software.

2. Check the harness connections.

a) Turn the key start switch to the off position.
b) Turn the battery disconnect switch to the off position.
c) Remove the key from the battery disconnect switch.
d) Make sure all connectors of the harness are clean, not damaged, and are tightly connected.

Result

Expected results - the harness connectors are clean, not damaged, and tightly connected.

Results:

- Yes - the harness connectors are clean, not damaged, and tightly connected.
- No - the harness connectors are not clean, damaged, or not tightly connected.

  The harness is bad.

  Repair: Repair or replace the harness.

3. Check the harness for 12 volt power from battery.

a) Turn the key start switch to the off position.
b) Turn the battery disconnect switch to the off position.
c) Remove the key from the battery disconnect switch.
d) Disconnect the J1 and J2 connectors from the transmission module.
e) Turn the battery disconnect switch to the on position.
f) Turn the key start switch to the on position.
g) Check the voltage at contacts 31, 38, and 39 of the J1 connector.

Result

Expected results - the voltage is 12 volts.

Results:

- Yes - the voltage is 12 volts.
- No - the voltage is not 12 volts.

4. Check the harness for short-circuit.

a) Turn the key start switch to the off position.
b) Turn the battery disconnect switch to the off position.
c) Remove the key from the battery disconnect switch.
d) Disconnect the the harness connector from the armrest module.
e) Check the resistance between contact 6 and contact 7 of the harness connector.

Result

Expected results - the resistance is more than 5000 ohms.

Results:

- Yes - the resistance more than 5000 ohms.
- No - the resistance is not more than 5000 ohms.

  The harness is bad.

  Repair: Repair or replace the harness.

5. Check the voltage of the harness.

a) Turn the key start switch to the off position.
b) Turn the battery disconnect switch to the off position.
c) Remove the key from the battery disconnect switch.
d) Disconnect the the harness connector from the armrest module.
e) Turn the battery disconnect switch to the on position.
f) Turn the key start switch to the on position.
g) Check the voltage at connector 6 and connector 7 of the armrest module harness connector.

Result

Expected results - the voltage is 2.5 volts.

Results:

- Yes - the voltage is 2.5 volts.

- No - the voltage is not 2.5 volts.

  The harness is bad.

  Repair: Repair or replace the harness.

6. Check the fuse.

a) Turn the key start switch to the off position.
b) Turn the battery disconnect switch to the off position.
c) Remove the key from the battery disconnect switch.
d) Check the fuse for transmission power.

Result

Expected results - the fuse is good.

Results:

- Yes - the fuse is good.
- No - the fuse is not good.

  Repair: Replace the fuse.

7. Check if the diagnostic code remains.

a) Check the contacts of the connectors and clean the contacts.
b) Connect all the connectors.
c) Turn the battery disconnect switch to the on position.
d) Turn the key start switch to the on position.
e) Turn on the engine.
f) Operate the engine at high idle.
g) Check if the diagnostic code remains.

Result

Expected result - the diagnostic code is not active.

Results:

- Yes - SPN 2005 FMI 02 is not active.

  Stop.
- No - SPN 2005 FMI 02 is active.

  Failure of the transmission module is possible but not common. Exit the procedure and do the procedure again. If the diagnostic code remains active, replace the module.

  Stop.

10.6.72.1 CAN electrical schematic

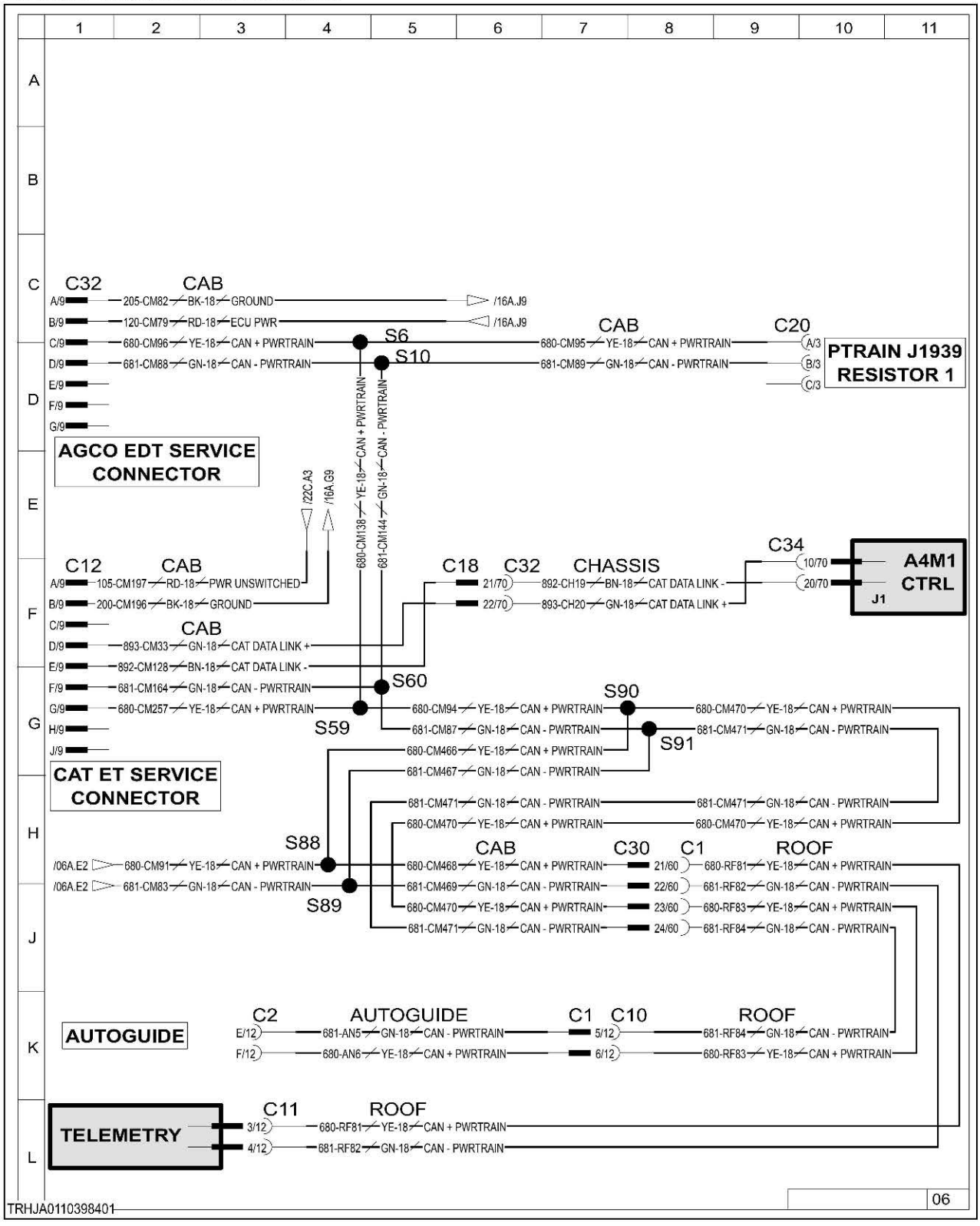

Fig. 219

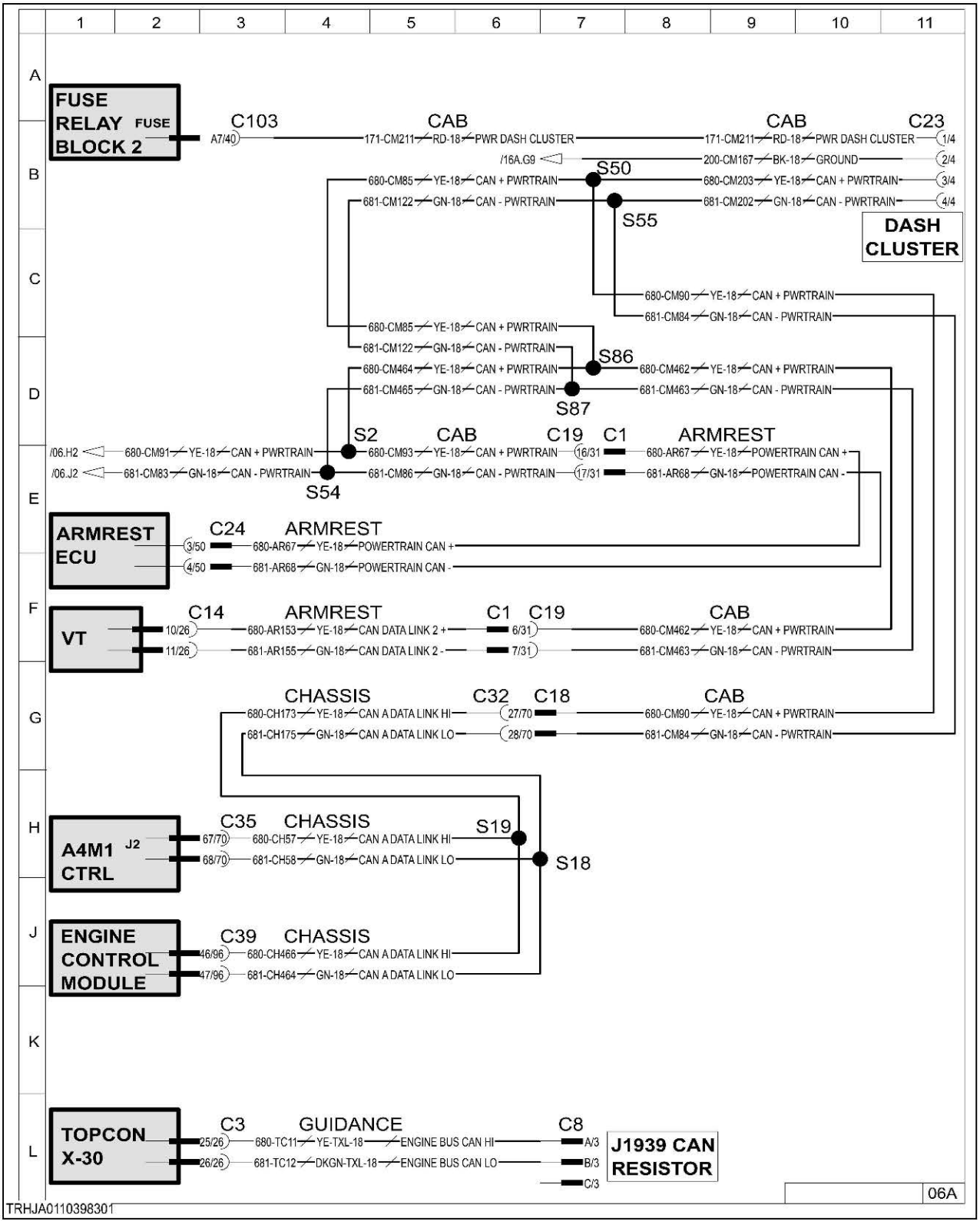
FUSE RELAY BLOCK 2
FUSE
C103
A7/40
CAB
171-CM211 RD-18 PWR DASH CLUSTER
CAB
C23
1/4
/16A.G9
200-CM167 BK-18 GROUND
2/4
S50
680-CM85 YE-18 CAN + PWRTRAIN
680-CM203 YE-18 CAN + PWRTRAIN
3/4
681-CM122 GN-18 CAN - PWRTRAIN
681-CM202 GN-18 CAN - PWRTRAIN
4/4
S55
DASH CLUSTER
680-CM90 YE-18 CAN + PWRTRAIN
681-CM84 GN-18 CAN - PWRTRAIN
680-CM85 YE-18 CAN + PWRTRAIN
681-CM122 GN-18 CAN - PWRTRAIN
S86
680-CM464 YE-18 CAN + PWRTRAIN
680-CM462 YE-18 CAN + PWRTRAIN
681-CM465 GN-18 CAN - PWRTRAIN
681-CM463 GN-18 CAN - PWRTRAIN
S87
S2
CAB
C19
C1
ARMREST
/06.H2
680-CM91 YE-18 CAN + PWRTRAIN
680-CM93 YE-18 CAN + PWRTRAIN
16/31
680-AR67 YE-18 POWERTRAIN CAN +
/06.J2
681-CM83 GN-18 CAN - PWRTRAIN
681-CM86 GN-18 CAN - PWRTRAIN
17/31
681-AR68 GN-18 POWERTRAIN CAN -
S54
ARMREST ECU
C24
ARMREST
3/50
680-AR67 YE-18 POWERTRAIN CAN +
4/50
681-AR68 GN-18 POWERTRAIN CAN -
VT
C14
ARMREST
C1
C19
CAB
10/26
680-AR153 YE-18 CAN DATA LINK 2 +
6/31
680-CM462 YE-18 CAN + PWRTRAIN
11/26
681-AR155 GN-18 CAN DATA LINK 2 -
7/31
681-CM463 GN-18 CAN - PWRTRAIN
CHASSIS
C32
C18
CAB
680-CH173 YE-18 CAN A DATA LINK HI
27/70
680-CM90 YE-18 CAN + PWRTRAIN
681-CH175 GN-18 CAN A DATA LINK LO
28/70
681-CM84 GN-18 CAN - PWRTRAIN
A4M1 CTRL
J2
C35
CHASSIS
S19
67/70
680-CH57 YE-18 CAN A DATA LINK HI
68/70
681-CH58 GN-18 CAN A DATA LINK LO
S18
ENGINE CONTROL MODULE
C39
CHASSIS
46/96
680-CH466 YE-18 CAN A DATA LINK HI
47/96
681-CH464 GN-18 CAN A DATA LINK LO
TOPCON X-30
C3
GUIDANCE
C8
25/26
680-TC11 YE-TXL-18 ENGINE BUS CAN HI
A/3
26/26
681-TC12 DKGN-TXL-18 ENGINE BUS CAN LO
B/3
C/3
J1939 CAN RESISTOR
06A
TRHJA0110398301

Fig. 220

10.6.72.2 Transmission input shaft speed sensor electrical schematic

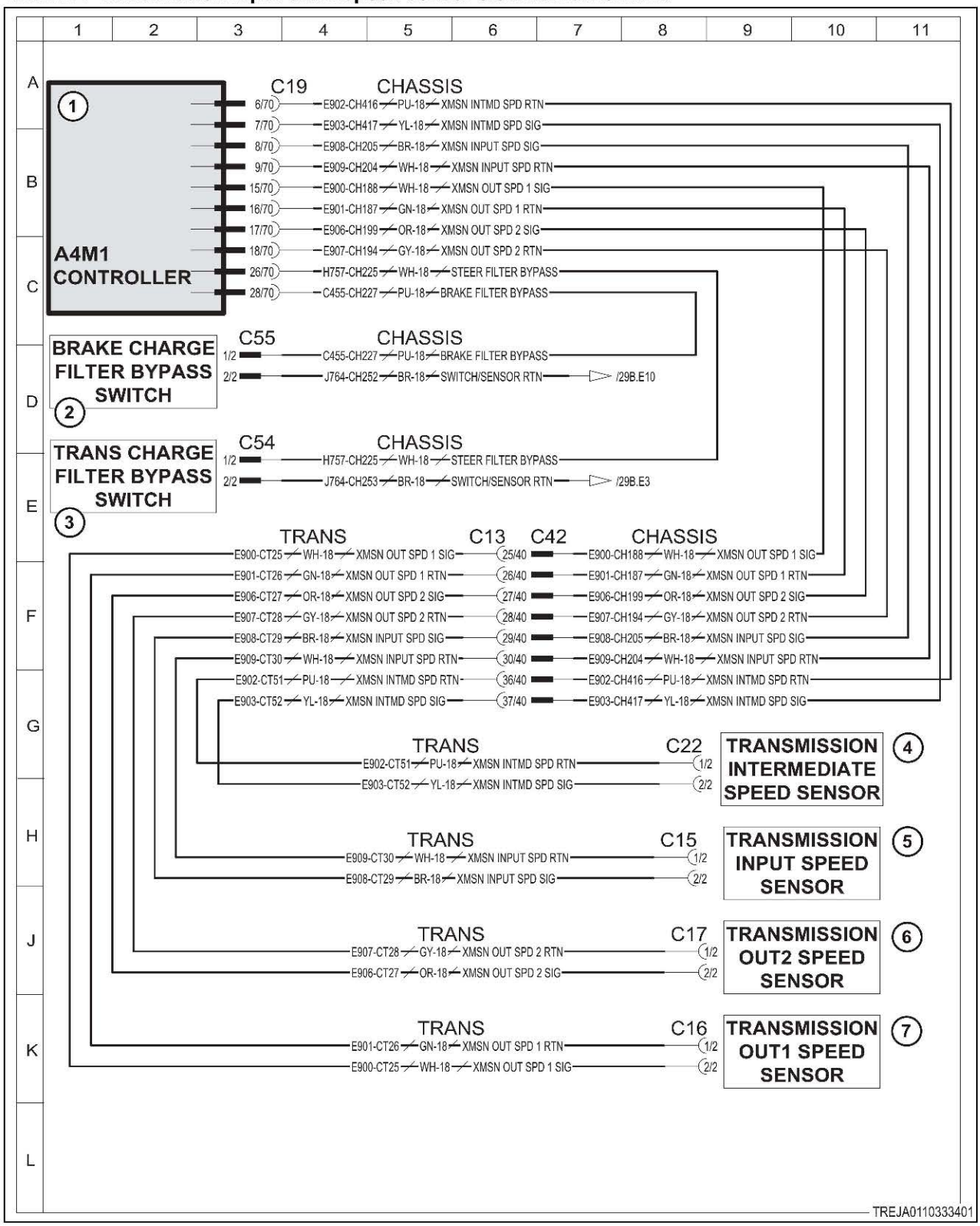

Fig. 221

Schematic legend		
Item	Schematic term	Description
1	A4M1 CONT	Transmission module
2	BRAKE CHARGE FILTER BYPASS SWITCH	Brake charge filter bypass switch
3	TRANS CHARGE FILTER BYPASS SWITCH	Transmission charge filter bypass switch
4	TRANSMISSION INTERMEDIATE SPEED SENSOR	Transmission intermediate speed sensor
5	TRANSMISSION INPUT SPEED SENSOR	Transmission input speed sensor
6	TRANSMISSION OUT 2 SPEED SENSOR	Transmission output speed sensor 2
7	TRANSMISSION OUT 1 SPEED SENSOR	Transmission output speed sensor 1
--	STEERING FILTER BYPASS	Steering filter bypass
--	BRAKE FILTER BYPASS	Brake filter bypass
--	SWITCH/SENSOR RTN	Switch/sensor return
--	XMSN OUT SPD SIG	Transmission output speed signal
--	XMSN OUT SPD RTN	Transmission output speed return
--	XMSN INPUT SPD RTN	Transmission input speed return
--	XMSN INPUT SPD SIG	Transmission input speed signal

10.6.73 Code SA 03 SPN 2602 FMI 14

The hydraulic oil level sensor not within expected range.

Diagnosis and solution

1. Check the hydraulic oil level switch for a short-circuit.
a) Turn the key start switch to the off position.
b) Turn the battery disconnect switch to the off position.
c) Remove the key from the battery disconnect switch.
d) Disconnect the harness connectors from the hydraulic oil level switch and transmission module.
e) Check resistance from the transmission module connector contact J1-32 to all other J1 and J2 harness connector contacts.

Result

Expected result - each resistance is more than 5000 ohms.

Results:

- Yes - each resistance is more than 5000 ohms.

  see step 2, page 10-404
- No - one or more resistance is not more than 5000 ohms.

  Repair or replace the harness.

  see step 4, page 10-405

2. Check the hydraulic oil level switch.
a) Turn the key start switch to the off position.
b) Turn the battery disconnect switch to the off position.
c) Remove the key from the battery disconnect switch.
d) Disconnect the harness connector from the hydraulic oil level switch.
e) Check the resistance from the hydraulic oil level switch connector contact A to contact B .

Result

Expected result - each resistance is between 6.8 ohms and 8.8 ohms.

Results:

- Yes - the resistance is between 6.8 ohms and 8.8 ohms.

  see step 3, page 10-405
- No - the resistance is not between 6.8 ohms and 8.8 ohms.

  Repair or replace the solenoid.

  see step 4, page 10-405

3. Check the harness for a short-circuit.

a) Turn the key start switch to the off position.
b) Turn the battery disconnect switch to the off position.
c) Remove the key from the battery disconnect switch.
d) Disconnect the harness connectors from the hydraulic oil level switch and transmission module.
e) At the hydraulic oil level switch harness connector, insert jumper wire between contact A and contact B.
f) Check resistance from the transmission module connector contact J1-32 to J2-21 connector contacts.

Result

Expected result - each resistance is less than 5 ohms.

Results:

- Yes - the resistance is less than 5 ohms.

  see step 4, page 10-405
- No - the resistance is less than 5 ohms..

  Repair or replace the harness.

  see step 4, page 10-405

4. Check if the diagnostic code remains.

a) Check and clean the harness connector contacts.
b) Connect all the connectors.
c) Turn the battery disconnect switch to the on position.
d) Turn the key start switch to the on position.
e) Operate the machine at low idle.
f) Check if the diagnostic code remains.

Result

Expected result - the diagnostic code is not active.

Results:

- Yes - SPN 2602 FMI 14 is not active.

  Stop.
- No - SPN 2602 FMI 14 is active.

  Failure of the transmission module is possible but not common. Exit the procedure and do the procedure again. If the diagnostic code remains active, replace the module.

  Stop.

10.6.73.1 Oil level switch schematic

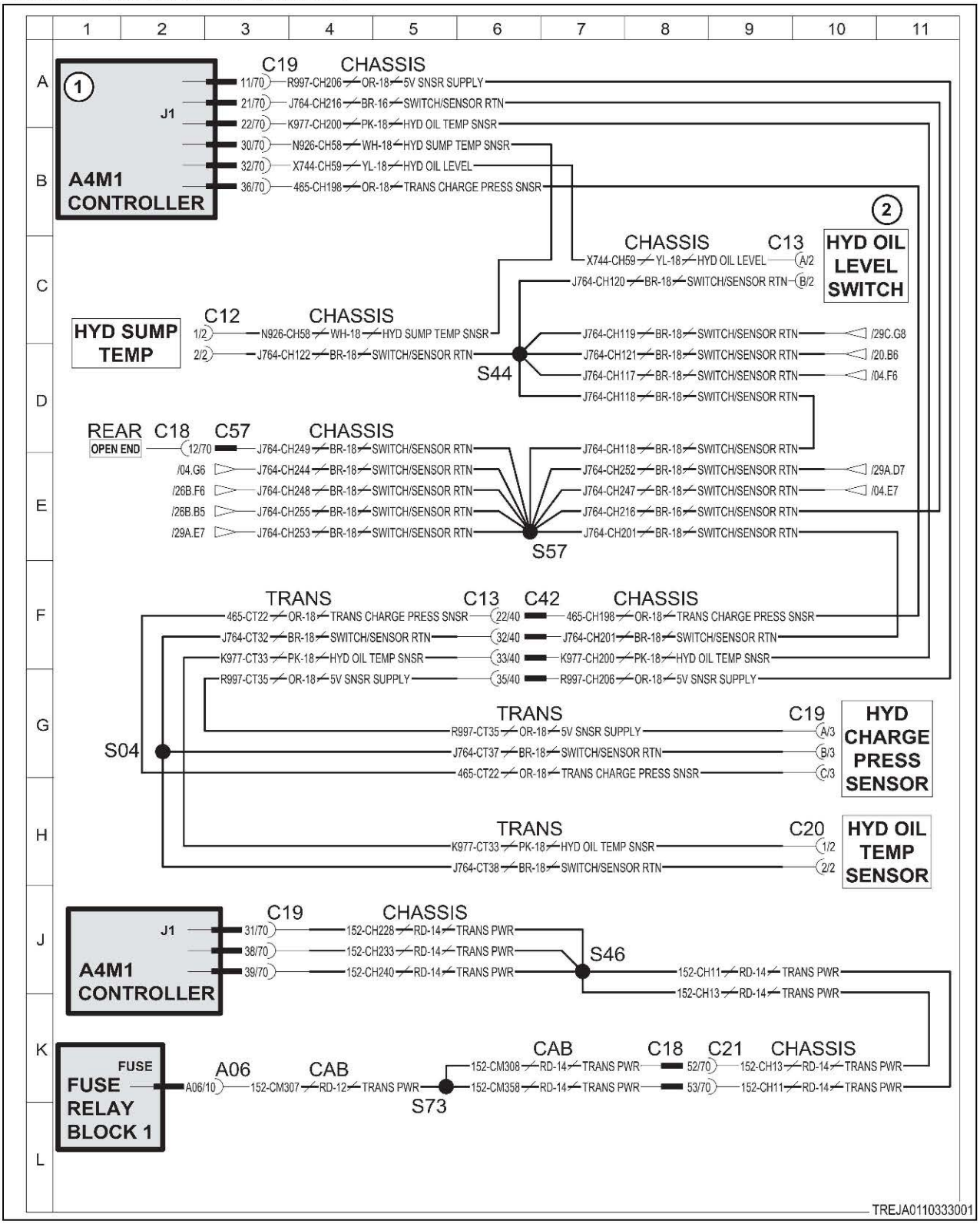

Fig. 222

Schematic legend		
Item	Schematic term	Description
1	A4M1 CONTROLLER	Transmission module
2	HYD OIL LEVEL SWITCH	Hydraulic oil level switch
-	HYD SUMP TEMP	Hydraulic sump temperature sensor
-	HYD CHARGE PRESS SENSOR	Hydraulic charge pressure sensor
-	HYD OIL TEMP SENSOR	Hydraulic oil temperature sensor
-	FUSE RELAY BLOCK 1	Fuse relay block 1
-	5V SNSR SUPPLY	5 volt sensor supply
-	SWITCH/SENSOR RTN	Switch/sensor return
-	TRANS CHARGE PRESS SNSR	Transmission charge pressure sensor
-	TRANS PWR	Transmission power

10.6.74 Code SA 03 SPN 2613 FMI 01

The axle lube pressure is low.

Diagnosis an solution

1. Verify that axle lube pressure is in correct operating range.

The axle lube fault code comes on at 69 kPa(10 PSI) and will remain on until the pressure is above 69 kPa(10 PSI)

2. Check the sensor.

a) Check the sensor, wiring, and hardware.

Result

Expected result - there is no damage to the sensor, wiring, or hardware.

Results:

- Yes - there is no damage to the sensor, wiring, or hardware.

  see step 3, page 10-407
- No - there is damage to the sensor, wiring, or hardware.

  Repair or replace damaged component.

  see step 6, page 10-408

3. Check for power at the sensor.

a) Turn the battery disconnect switch to the on position.
b) Turn the key start switch to the on position.
c) Check voltage from contact 1 to frame ground at the sensor.

Result

Expected result - voltage is 12 volts.

Results:

- Yes - voltage is 12 volts.

  see step 4, page 10-408
- No - voltage is not 12 volts.

  Repair or replace the harness.

  see step 6, page 10-408

4. Check for correct ground at the sensor.
   a) Turn the key start switch to the off position.
   b) Turn the battery disconnect switch to the off position.
   c) Remove the key from the battery disconnect switch.
   d) Check resistance from contact 2 to frame ground at the sensor.

   Result

   Expected result - resistance is less than 5 ohms.

   Results:

   - Yes - resistance is less than 5 ohms.

     see step 5, page 10-408
   - No - resistance is not less than 5 ohms.

     Repair or replace the harness.

     see step 6, page 10-408

5. Check for a short-circuit in the sensor harness.
   a) Turn the key start switch to the off position.
   b) Turn the battery disconnect switch to the off position.
   c) Remove the key from the battery disconnect switch.
   d) Disconnect the harness from the sensor and the rear lighting module connectors.
   e) Check resistance between transmission module contact J1- 33 and all other transmission module contacts.

   Result

   Expected result - resistance is more than 5000 ohms.

   Results:

   - Yes - resistance is more than 5000 ohms.

     see step 6, page 10-408
   - No - resistance is not more than 5000 ohms.

     Repair or replace the harness.

     see step 6, page 10-408

6. Check if the diagnostic code remains.
   a) Check and clean the harness connector contacts.
   b) Connect all the connectors.
   c) Turn the battery disconnect switch to the on position.
   d) Turn the key start switch to the on position.
   e) Operate the machine at low idle.
   f) Check if the diagnostic code remains.

   Result

   Expected result - the diagnostic code is not active.

   Results:

   - Yes - SPN 2613 FMI 01 is not active.

     Stop.

- No - SPN 2613 FMI 01 is active.

  Failure of the module is possible but not common. Exit the procedure and do the procedure again. If the diagnostic code remains active, replace the module.

  Stop.

10.6.74.1 Axle lube sensor electrical schematic

Schematic legend		
Item	Schematic term	Description
1	A4M1 CONTROLLER	Transmission module
2	AXLE LUBE PRESSURE SWITCH	Axle lube pressure switch
-	CHASSIS	Chassis
-	CAB	Cab
-	AXLE LUBE PRESSURE	Axle lube pressure
-	INCH PEDAL SW 1 NC	Inch pedal switch 1 normally close
-	INCH PEDAL SW 2 NO	Inch pedal switch 2 normally open
-	SWITCH SENSOR RTN	Switch sensor return
-	XSMN INCH PEDAL SENS	Transmission inch pedal sensor
-	DECEL PEDAL	Decel pedal
-	POWER	Power
-	GROUND	Ground
-	SIG DECEL PEDAL	Signal decel pedal
-	PWR TRANS COMPONENTS	Power transmission components

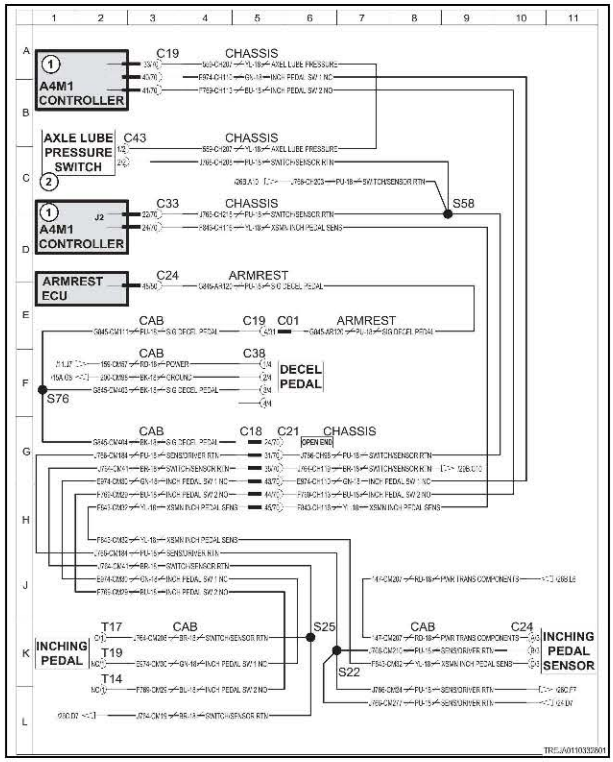

Fig. 223

10.6.75 Code SA 03 SPN 2613 FMI 18

The axle lube pressure sensor voltage below normal.

Diagnosis an solution

1. Verify that axle lube pressure is in correct operating range.

The axle lube fault code comes on at 69 kPa(10 PSI) and will remain on until the pressure is above 69 kPa(10 PSI)

2. Check the sensor.

a) Check the sensor, wiring, and hardware.

Result

Expected result - there is no damage to the sensor, wiring, or hardware.

Results:

- Yes - there is no damage to the sensor, wiring, or hardware.

  see step 3, page 10-410
- No - there is damage to the sensor, wiring, or hardware.

  Repair or replace the damaged component.

  see step 5, page 10-410

3. Check for power at the sensor.

a) Turn the battery disconnect switch to the on position.
b) Turn the key start switch to the on position.
c) Check voltage from harness connector contact 1 to frame ground at the sensor.

Result

Expected result - voltage is 12 volts.

Results:

- Yes - voltage is 12 volts.

  see step 4, page 10-410
- No - voltage is not 12 volts.

  Repair or replace the harness.

  see step 5, page 10-410

4. Check for correct ground at the sensor.

a) Turn the key start switch to the off position.
b) Turn the battery disconnect switch to the off position.
c) Remove the key from the battery disconnect switch.
d) Check resistance from the harness connector contact 2 to frame ground at the sensor.

Result

Expected result - resistance is less than 5 ohms.

Results:

- Yes - resistance is less than 5 ohms.

  see step 5, page 10-410
- No - resistance is not less than 5 ohms.

  Repair or replace the harness.

  see step 5, page 10-410

5. Check if the diagnostic code remains.

a) Check and clean the harness connector contacts.
b) Connect all the connectors.
c) Turn the battery disconnect switch to the on position.
d) Turn the key start switch to the on position.
e) Operate the machine at low idle.
f) Check if the diagnostic code remains.

Result

Expected result - the diagnostic code is not active.

Results:

- Yes - SPN 2613 FMI 18 is not active.

  Stop.

- No - SPN 2613 FMI 18 is active.

  Failure of the module is possible but not common. Exit the procedure and do the procedure again. If the diagnostic code remains active, replace the module.

  Stop.

10.6.75.1 Axle lube sensor electrical schematic

Schematic legend		
Item	Schematic term	Description
1	A4M1 CONTROLLER	Transmission module
2	AXLE LUBE PRESSURE SWITCH	Axle lube pressure switch
-	CHASSIS	Chassis
-	CAB	Cab
-	AXLE LUBE PRESSURE	Axle lube pressure
-	INCH PEDAL SW 1 NC	Inch pedal switch 1 normally close
-	INCH PEDAL SW 2 NO	Inch pedal switch 2 normally open
-	SWITCH SENSOR RTN	Switch sensor return
-	XSMN INCH PEDAL SENS	Transmission inch pedal sensor
-	DECEL PEDAL	Decel pedal
-	POWER	Power
-	GROUND	Ground
-	SIG DECEL PEDAL	Signal decel pedal
-	PWR TRANS COMPONENTS	Power transmission components

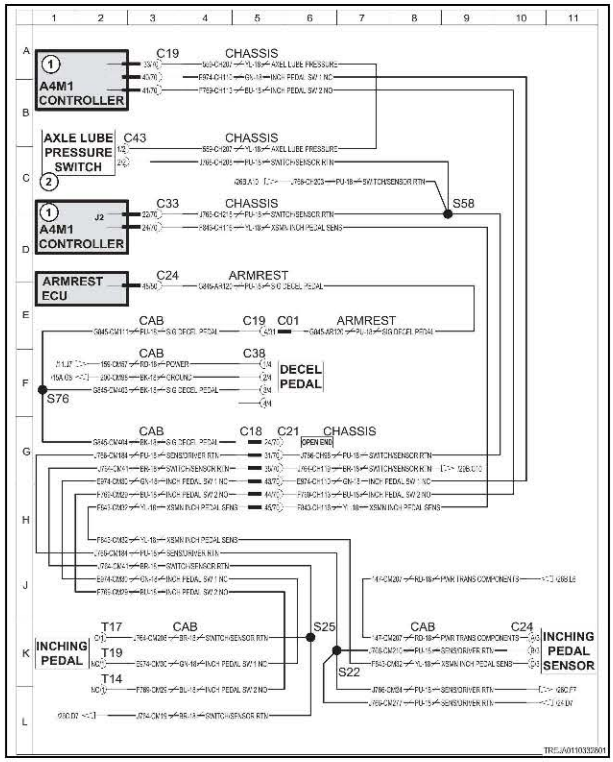

Fig. 224

10.6.76 Code SA 03 SPN 2833 FMI 14

The module has detected that the machine has moved with the parking brake engaged. The parking brake pressure switch signal is not within normal range.

Diagnosis and solution

1. Check for active diagnostic code.

a) Clear the diagnostic code.

b) Operate the machine and check if SPN 2833 FMI 14 is active.

Result

Expected results - SPN 2833 FMI 14 is not active.

Results:

- Yes - SPN 2833 FMI 14 is not active.

  Stop.

- No - SPN 2833 FMI 14 is active.

2. Check the harness for short-circuit.

a) Turn the key start switch to the off position.
b) Turn the disconnect switch to the off position.
c) Remove the key from the disconnect switch.
d) Disconnect the parking brake pressure switch harness connector.
e) Check the resistance between contact 1 of the parking brake pressure switch harness connector and frame ground.

Result

Expected results - the resistance is more than 5000 ohms.

Results:

- Yes - the resistance is more than 5000 ohms.
- No - the resistance is not more than 5000 ohms.

  The harness is bad.

  Repair: Repair or replace the harness.

3. Check if the diagnostic code remains.

a) Check the contacts of the connectors and clean the contacts.
b) Connect all the connectors.
c) Turn the battery disconnect switch to the on position.
d) Turn the key start switch to the on position.
e) Turn on the engine.
f) Operate the engine at high idle.
g) Check if the diagnostic code remains.

Result

Expected result - the diagnostic code is not active.

Results:

- Yes - SPN 2833 FMI 14 is not active.

  Stop.
- No - SPN 2833 FMI 14 is active.

  Failure of the transmission module is possible but not common. Exit the procedure and do the procedure again. If the diagnostic code remains active, replace the module.

  Stop.

10.6.76.1 Brake accumulator electrical schematic

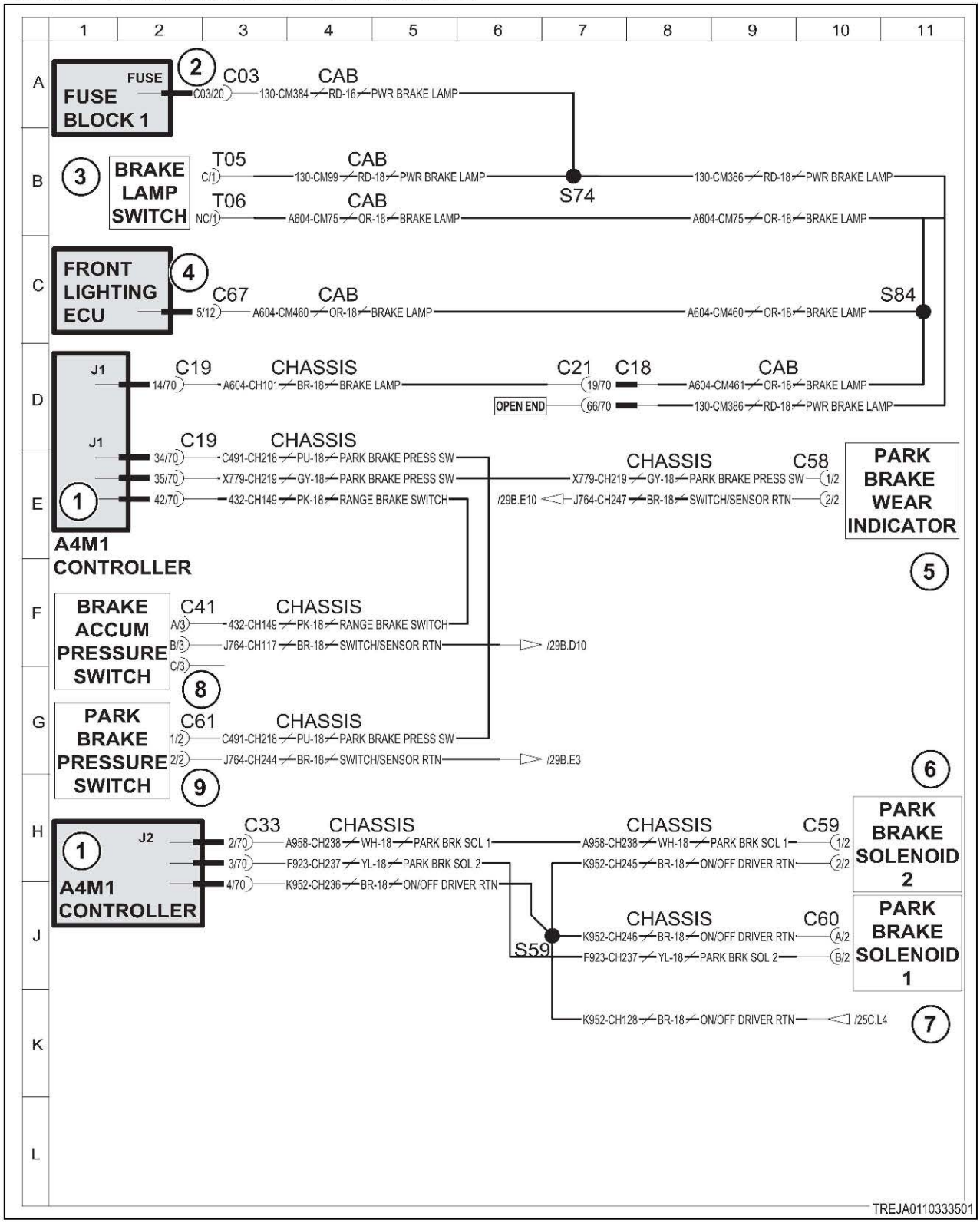

Fig. 225

Schematic legend		
Item	Schematic term	Description
1	A4M1 CONT	Transmission module
2	FUSE BLOCK 1	Fuse block 1
3	BRAKE LAMP SWITCH	Brake lamp switch
4	FRONT LIGHTING ECU	Front lighting module
5	PARK BRAKE WEAR INDICATOR	Park brake wear indicator
6	PARK BRK SOL 2	Park brake solenoid 2
7	PARK BRK SOL 1	Park brake solenoid 1
8	BRAKE ACCUM PRESSURE SWITCH	Brake accumulator pressure switch
9	PARK BRAKE PRESSURE SWITCH	Park brake pressure switch
--	SWITCH/SENSOR RTN	Switch/sensor return
--	PARK BRAKE PRESS SW	Park brake pressure switch
--	PWR BRAKE LAMP	Power brake lamp
--	ON/OFF DRIVER RTN	On/off driver return
--	PWR BRAKE LAMP	Power brake lamp

10.6.77 Code SA 03 SPN 2833 FMI 31

The module has detected that the machine has moved with the parking brake engaged.

Diagnosis and solution

1. Check for active diagnostic code.

a) Clear the diagnostic code.

b) Operate the machine and check if SPN 2833 FMI 14 is active.

Result

Expected results - SPN 2833 FMI 14 is not active.

Results:

- Yes - SPN 2833 FMI 31 is not active.

  Stop.
- No - SPN 2833 FMI 31 is active.

2. Check the harness for short-circuit.

a) Turn the key start switch to the off position.

b) Turn the disconnect switch to the off position.

c) Remove the key from the disconnect switch.

d) Disconnect the parking brake pressure switch harness connector.

e) Check the resistance between contact 1 of the parking brake pressure switch harness connector and frame ground.

Result

Expected results - the resistance is more than 5000 ohms.

Results:

- Yes - the resistance is more than 5000 ohms.

- No - the resistance is not more than 5000 ohms.

  The harness is bad.

  Repair: Repair or replace the harness.

3. Check if the diagnostic code remains.

a) Check the contacts of the connectors and clean the contacts.
b) Connect all the connectors.
c) Turn the battery disconnect switch to the on position.
d) Turn the key start switch to the on position.
e) Turn on the engine.
f) Operate the engine at high idle.
g) Check if the diagnostic code remains.

Result

Expected result - the diagnostic code is not active.

Results:

- Yes - SPN 2833 FMI 31 is not active.

  Stop.
- No - SPN 2833 FMI 31 is active.

  Failure of the transmission module is possible but not common. Exit the procedure and do the procedure again. If the diagnostic code remains active, replace the module.

  Stop.

10.6.77.1 Brake accumulator electrical schematic

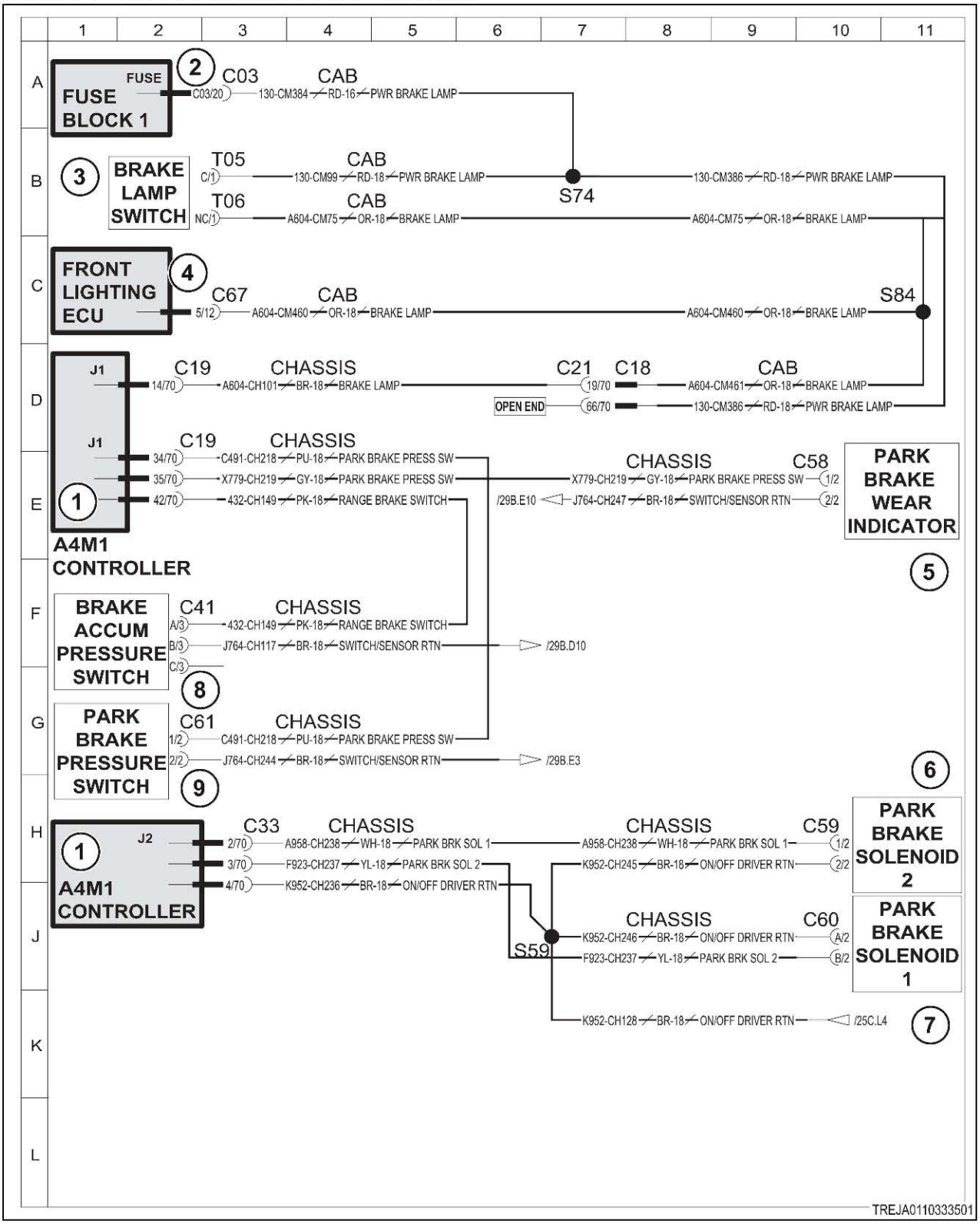

Fig. 226

Schematic legend		
Item	Schematic term	Description
1	A4M1 CONT	Transmission module
2	FUSE BLOCK 1	Fuse block 1
3	BRAKE LAMP SWITCH	Brake lamp switch
4	FRONT LIGHTING ECU	Front lighting module
5	PARK BRAKE WEAR INDICATOR	Park brake wear indicator
6	PARK BRK SOL 2	Park brake solenoid 2
7	PARK BRK SOL 1	Park brake solenoid 1
8	BRAKE ACCUM PRESSURE SWITCH	Brake accumulator pressure switch
9	PARK BRAKE PRESSURE SWITCH	Park brake pressure switch
--	SWITCH/SENSOR RTN	Switch/sensor return
--	PARK BRAKE PRESS SW	Park brake pressure switch
--	PWR BRAKE LAMP	Power brake lamp
--	ON/OFF DRIVER RTN	On/off driver return
--	PWR BRAKE LAMP	Power brake lamp

10.6.78 Code SA 03 SPN 2858 FMI 02

The module has detected the signal for the controller area network (CAN) is erratic, intermittent, or not correct.

Diagnosis and solution

1. Check the machine configuration.

a) Connect the CAT electronic technician to the service connector in the cab.
b) Turn the battery disconnect switch to the on position.
c) Turn the key start switch to the on position.
d) Start the CAT electronic technician program.
e) Check all the machine options and configurations.

Result

Expected results - the machine options and configurations are correct.

Results:

- Yes - the machine options and configurations are correct.
- No - the machine options and configurations are not correct.

  Change the options or configurations to the correct values and check for active diagnostic code.

  If diagnostic code is not active, stop.

2. Check the harness for open circuit.

a) Turn the key start switch to the off position.
b) Turn the battery disconnect switch to the off position.
c) Remove the key from the battery disconnect switch.
d) Disconnect all harness connectors from the controller area network (CAN) resistor, implement solenoids, hitch steering solenoid, the raise lower solenoid, the transmission module, armrest module and the roof controller.
e) Put a jumper wire between contact 6 and contact 7 of the armrest module harness connector.

f) Check the resistance between contact 64 and contact 65 of the transmission module J2 harness connector.
g) Put a jumper wire between contact 10 and contact 12 of the roof controller harness connector.
h) Check the resistance between contact 64 and contact 65 of the transmission module J2 harness connector.
i) Put a jumper wire between contact A and contact B of the CAN resistor harness connector.
j) Check the resistance between contact 64 and contact 65 of the transmission module J2 harness connector.
k) Put a jumper wire between contact 1 and contact 4 of the implement solenoid 1 harness connector.
l) Check the resistance between contact 64 and contact 65 of the transmission module J2 harness connector.
m) Put a jumper wire between contact 1 and contact 4 of the implement solenoid 2 harness connector.
n) Check the resistance between contact 64 and contact 65 of the transmission module J2 harness connector.
o) Put a jumper wire between contact 1 and contact 4 of the implement solenoid 3 harness connector.
p) Check the resistance between contact 64 and contact 65 of the transmission module J2 harness connector.
q) Put a jumper wire between contact 1 and contact 4 of the implement solenoid 4 harness connector.
r) Check the resistance between contact 64 and contact 65 of the transmission module J2 harness connector.
s) Put a jumper wire between contact 1 and contact 4 of the implement solenoid 5 harness connector.
t) Check the resistance between contact 64 and contact 65 of the transmission module J2 harness connector.
u) Put a jumper wire between contact 1 and contact 4 of the implement solenoid 6 harness connector.
v) Check the resistance between contact 64 and contact 65 of the transmission module J2 harness connector.
w) Put a jumper between contact 1 and contact 4 of the raise lower solenoid.
x) Check the resistance between contact 64 and contact 65 of the transmission module J2 harness connector.
y) Put a jumper between contact 1 and contact 4 of the hitch steering solenoid.
z) Check the resistance between contact 64 and contact 65 of the transmission module J2 harness connector.
aa) Remove all of the jumper wires.

Result

Expected results - the resistances are less than 5 ohms.

Results:

- Yes - the resistances are less than 5 ohms.
- No the resistances are not less than 5 ohms.

  The harness is bad.

  Repair: Repair or replace the harness.

3. Check the harness for short-circuit.
a) Turn the key start switch to the off position.
b) Turn the battery disconnect switch to the off position.
c) Remove the key from the battery disconnect switch.

d) Disconnect all harness connectors from the controller area network (CAN) resistor, implement solenoids, hitch steering solenoid, the raise lower solenoid, the transmission module J2, armrest module and the roof controller.
e) At the controller area network (CAN) resistor harness connector, check the resistance between contact A and contact B.
f) At the implement solenoid 1 harness connector, check the resistance between contact 1 and all other contacts at the implement solenoid 1 harness connector.
g) At the implement solenoid 1 harness connector, check the resistance between contact 4 and all other contacts at the implement solenoid 1 harness connector.
h) At the implement solenoid 2 harness connector, check the resistance between contact 1 and all other contacts at the implement solenoid 1 harness connector.
i) At the implement solenoid 2 harness connector, check the resistance between contact 4 and all other contacts at the implement solenoid 1 harness connector.
j) At the implement solenoid 3 harness connector, check the resistance between contact 1 and all other contacts at the implement solenoid 1 harness connector.
k) At the implement solenoid 3 harness connector, check the resistance between contact 4 and all other contacts at the implement solenoid 1 harness connector.
l) At the implement solenoid 4 harness connector, check the resistance between contact 1 and all other contacts at the implement solenoid 1 harness connector.
m) At the implement solenoid 4 harness connector, check the resistance between contact 4 and all other contacts at the implement solenoid 1 harness connector.
n) At the implement solenoid 5 harness connector, check the resistance between contact 1 and all other contacts at the implement solenoid 1 harness connector.
o) At the implement solenoid 5 harness connector, check the resistance between contact 4 and all other contacts at the implement solenoid 1 harness connector.
p) At the implement solenoid 6 harness connector, check the resistance between contact 1 and all other contacts at the implement solenoid 1 harness connector.
q) At the implement solenoid 6 harness connector, check the resistance between contact 4 and all other contacts at the implement solenoid 1 harness connector.
r) At the hitch steering solenoid harness connector, check the resistance between contact 1 and all the other contacts of the hitch steering solenoid harness connector.
s) At the hitch steering solenoid harness connector, check the resistance between contact 4 and all the other contacts of the hitch steering solenoid harness connector.
t) At the raise lower solenoid harness connector, check the resistance between contact 1 and all the other contacts of the raise lower solenoid harness connector.
u) At the raise lower solenoid harness connector, check the resistance between contact 4 and all the other contacts of the raise lower solenoid harness connector.
v) At the transmission module J2 harness connector, check the resistance between contact 64 and all the other transmission module J2 harness connector contacts.
w) At the transmission module J2 harness connector, check the resistance between contact 65 and all the other transmission module J2 harness connector contacts.
x) At the armrest module harness connector, check the resistance between contact 6 and all the other armrest harness connector contacts.
y) At the armrest module harness connector, check the resistance between contact 7 and all the other armrest harness connector contacts.
z) At the roof controller harness connector, check the resistance between contact 10 and all the other roof controller harness connector contacts.
aa) At the roof controller harness connector, check the resistance between contact 11 and all the other roof controller harness connector contacts.

Result

Expected results - the resistances are more than 5000 ohms.

Results:

- Yes - the resistances are more than 5000 ohms.

- No - the resistances are not more than 5000 ohms.

  The harness is bad.

  Repair: Repair or replace the harness.

4. Check if the diagnostic code remains.

a) Check the contacts of the connectors and clean the contacts.
b) Connect all the connectors.
c) Turn the battery disconnect switch to the on position.
d) Turn the key start switch to the on position.
e) Turn on the engine.
f) Operate the engine at high idle.
g) Check if the diagnostic code remains.

Result

Expected result - the diagnostic code is not active.

Results:

- Yes - SPN 2858 FMI 02 is not active.

  Stop.
- No - SPN 2858 FMI 02 is active.

  Failure of the transmission module is possible but not common. Exit the procedure and do the procedure again. If the diagnostic code remains active, replace the module.

  Stop.

10.6.78.1 CAN electrical schematic

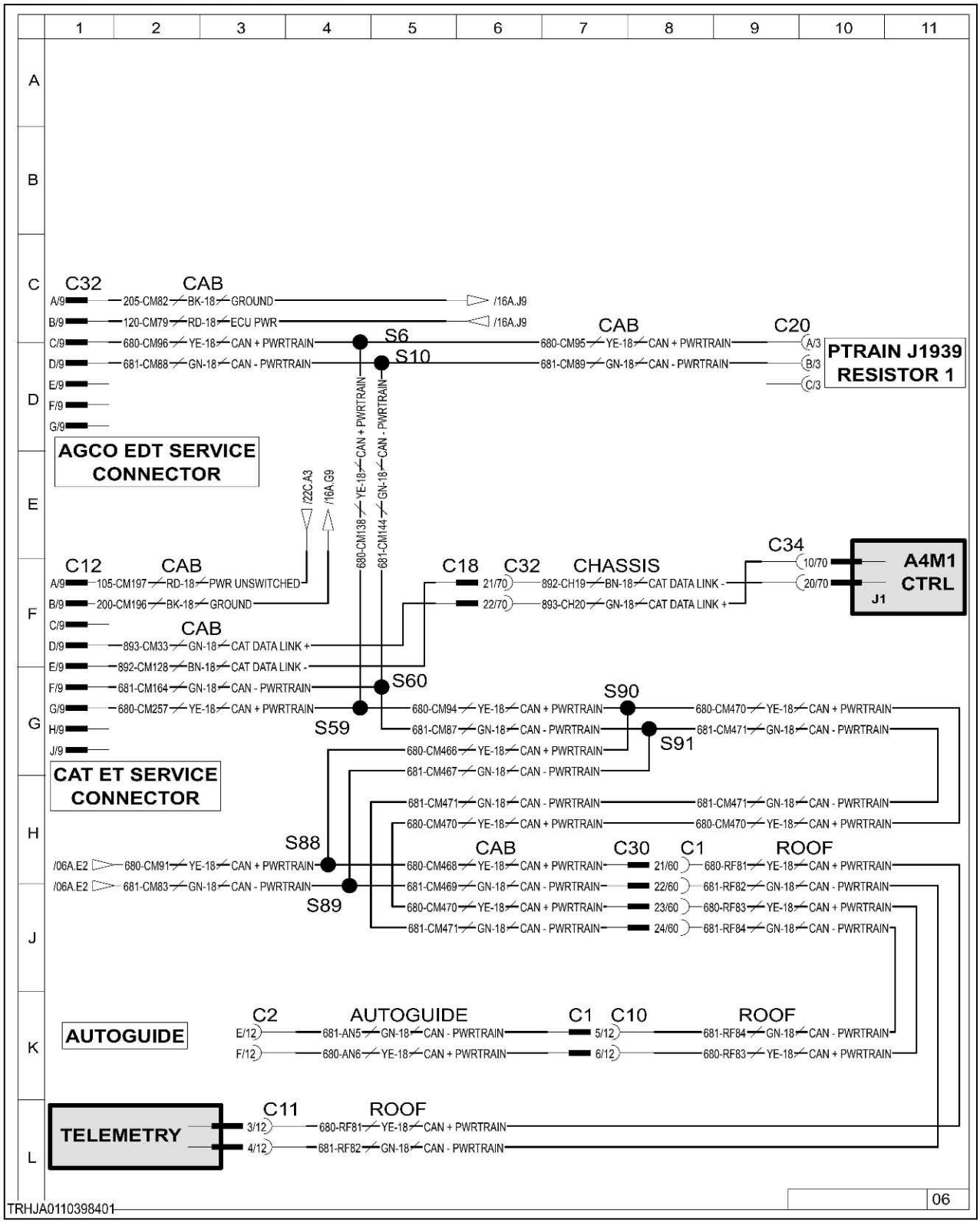

Fig. 227

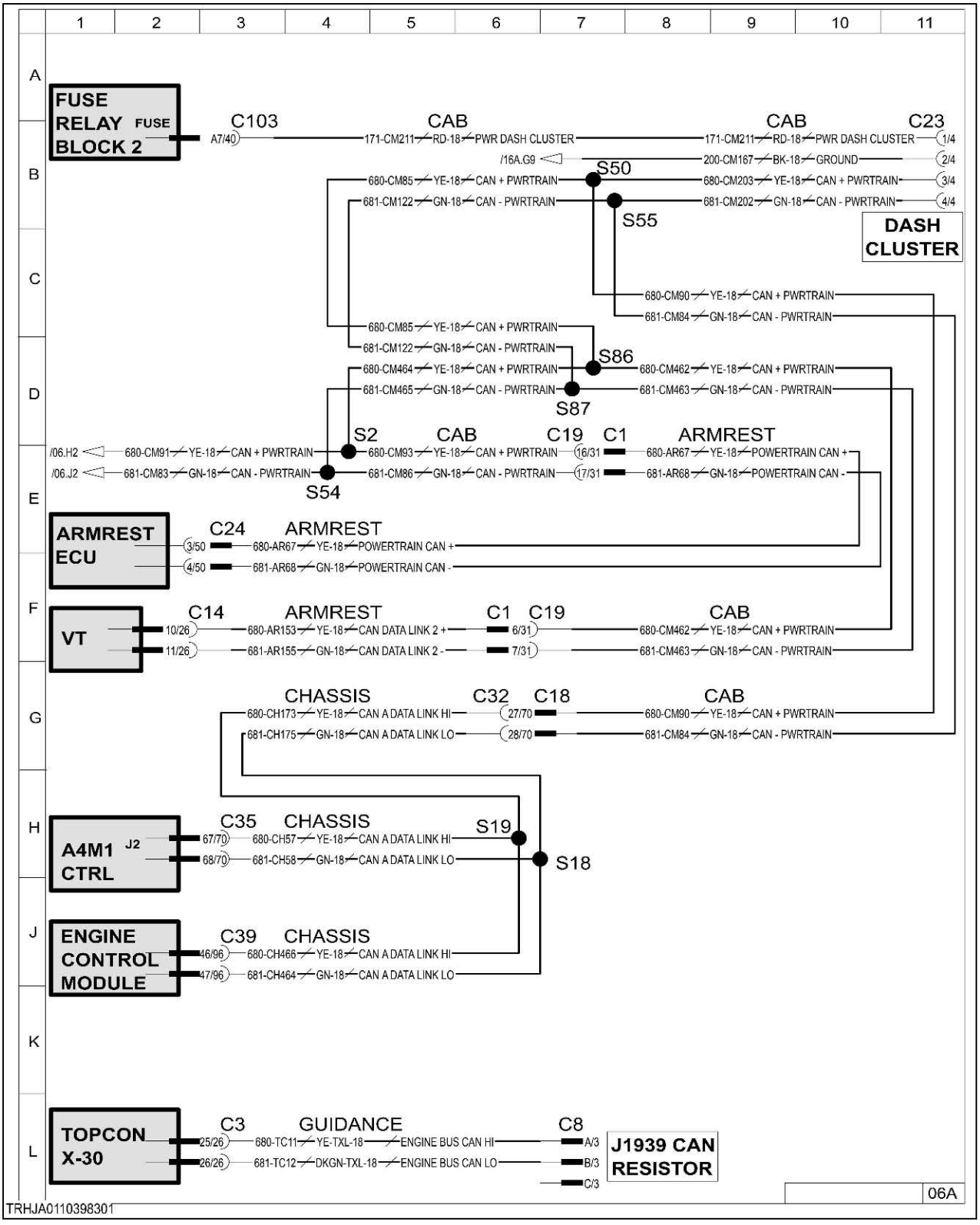

Fig. 228

10.6.79 Code SA 03 SPN 2905 FMI 03

The module has detected that the voltage of the transmission clutch solenoid 7 circuit is above normal.

Diagnosis and solution

1. Check the harness for short-circuit.

a) Turn the key start switch to the off position.
b) Turn the battery disconnect switch to the off position.
c) Remove the key from the battery disconnect switch.
d) Disconnect the transmission clutch solenoid 7 harness connector.
e) Check the resistance between contact 1 and contact 2 of the transmission clutch solenoid 7 harness connector.

Result

Expected results - the resistance is more than 5000 ohms.

Results:

- Yes - the resistance is more than 5000 ohms.
- No - the resistance is not more than 5000 ohms.

  The harness is bad.

  Repair: Repair or replace the harness.

2. Check if the diagnostic code remains.

a) Check the contacts of the connectors and clean the contacts.
b) Connect all the connectors.
c) Turn the battery disconnect switch to the on position.
d) Turn the key start switch to the on position.
e) Turn on the engine.
f) Operate the engine at high idle.
g) Check if the diagnostic code remains.

Result

Expected result - the diagnostic code is not active.

Results:

- Yes - SPN 2905 FMI 03 is not active.

  Stop.
- No - SPN 2905 FMI 03 is active.

  Failure of the transmission module is possible but not common. Exit the procedure and do the procedure again. If the diagnostic code remains active, replace the module.

  Stop.

10.6.79.1 Transmission clutch solenoid electrical schematic

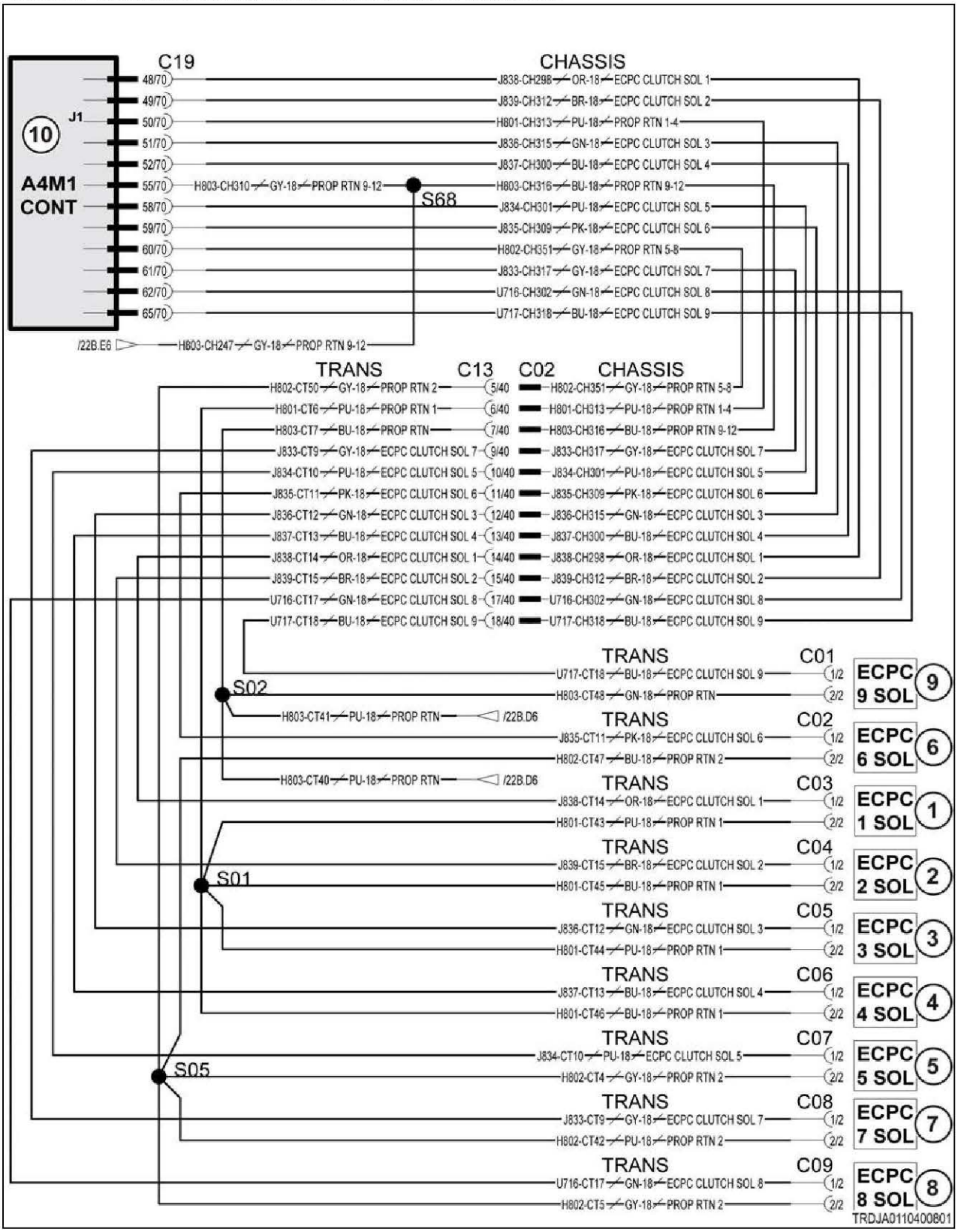

Fig. 229

Schematic legend		
Item	Schematic term	Description
1	ECPC 1 SOL	Electronic clutch pressure control solenoid 1
2	ECPC 2 SOL	Electronic clutch pressure control solenoid 2
3	ECPC 3 SOL	Electronic clutch pressure control solenoid 3
4	ECPC 4 SOL	Electronic clutch pressure control solenoid 4
5	ECPC 5 SOL	Electronic clutch pressure control solenoid 5
6	ECPC 6 SOL	Electronic clutch pressure control solenoid 6
7	ECPC 7 SOL	Electronic clutch pressure control solenoid 7
8	ECPC 8 SOL	Electronic clutch pressure control solenoid 8
9	ECPC 9 SOL	Electronic clutch pressure control solenoid 9
10	A4M1 CONT	Transmission module
--	PROP RTN	Proportional return

10.6.80 Code SA 03 SPN 2905 FMI 05

The module has detected that the current of the transmission solenoid 7 circuit is below normal.

The transmission module has detected an open circuit in the solenoid circuit. The most likely cause is a disconnected solenoid.

Diagnosis and solution

1. Check the solenoid coil resistance.
- a) Turn the key start switch to the off position.
- b) Turn the battery disconnect switch to the off position.
- c) Disconnect the clutch solenoid from the harness.
- d) Check the resistance between contacts 1 and 2 of the solenoid.

Result

- The resistance is between 5 and 10 ohms.

  The solenoid is not the fault.

  See step 2 to check for open circuit.
- The resistance is above 10 ohms.

  Replace the solenoid.

  See step 3 to validate the repair.

2. Check the harness for an open circuit.
- a) Install a shorting jumper between contacts 1 and 2 of the solenoid connector.
- b) Disconnect the J1 harness connector from the transmission module.
- c) Check the resistance between contacts J1-60 and J1-61 on the transmission module connector.

Result

- The resistance is at or near 0 ohms.

  The harness is not open.

  Remove the shorting jumper.

  See step 3 to validate the repair.

- The resistance is high (not near 0 ohms).

  Repair or replace the harness.

  See step 3 to validate the repair.

3. Check if the diagnostic code remains.

a) Check and clean the harness connector contacts.
b) Connect all the connectors.
c) Turn the battery disconnect switch to the on position.
d) Turn the key start switch to the on position.
e) Operate the machine at low idle.
f) Check if the diagnostic code remains.

Result

- SPN 2905 FMI 05 is not active.

  Stop.
- SPN 2905 FMI 05 is active.

  Failure of the transmission module is possible but not common. Exit the procedure and do the procedure again. If the diagnostic code remains active, replace the module.

  Stop.

10.6.80.1 Transmission clutch solenoid electrical schematic

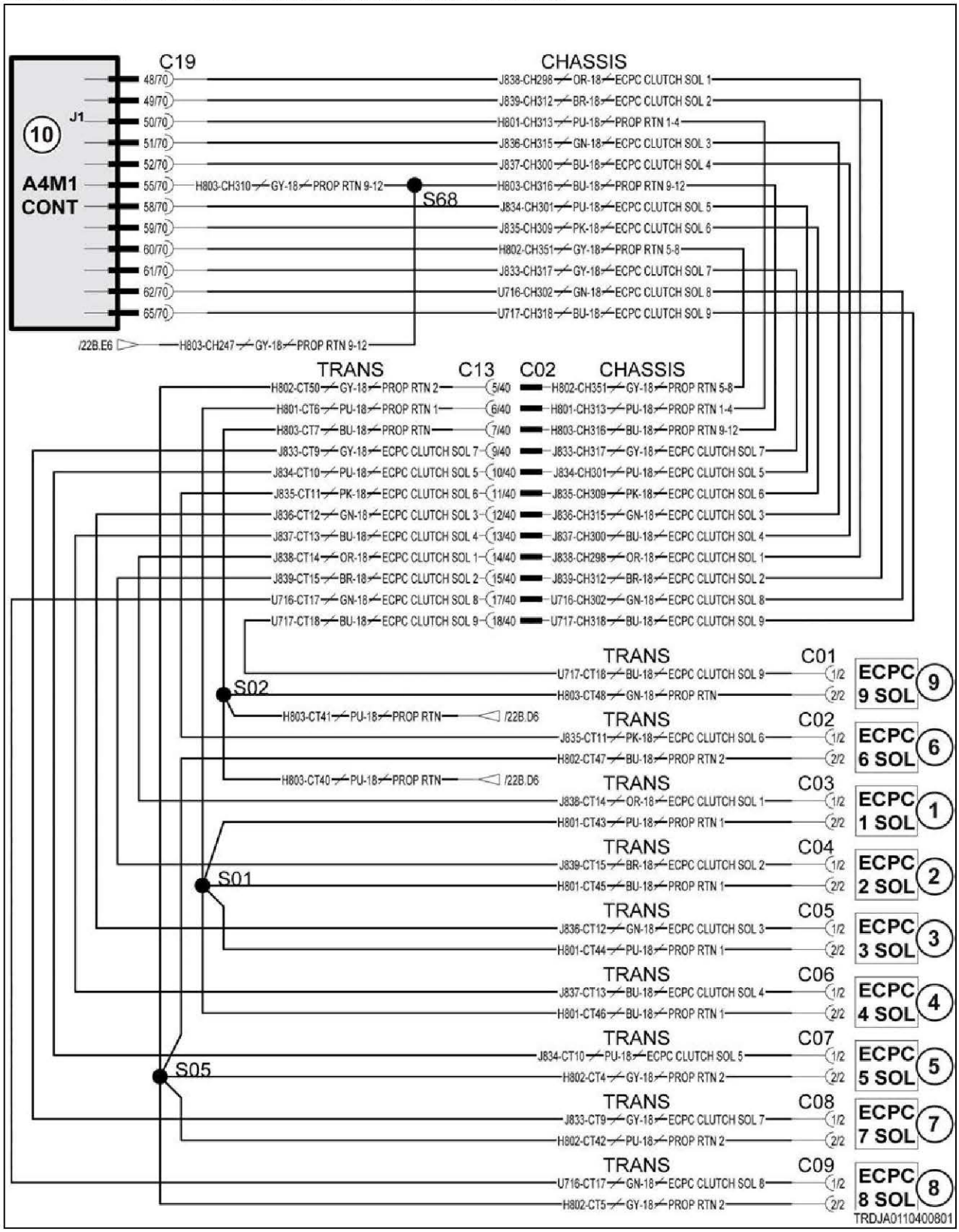

Fig. 230

Schematic legend		
Item	Schematic term	Description
1	ECPC 1 SOL	Electronic clutch pressure control solenoid 1
2	ECPC 2 SOL	Electronic clutch pressure control solenoid 2
3	ECPC 3 SOL	Electronic clutch pressure control solenoid 3
4	ECPC 4 SOL	Electronic clutch pressure control solenoid 4
5	ECPC 5 SOL	Electronic clutch pressure control solenoid 5
6	ECPC 6 SOL	Electronic clutch pressure control solenoid 6
7	ECPC 7 SOL	Electronic clutch pressure control solenoid 7
8	ECPC 8 SOL	Electronic clutch pressure control solenoid 8
9	ECPC 9 SOL	Electronic clutch pressure control solenoid 9
10	A4M1 CONT	Transmission module
--	PROP RTN	Proportional return

10.6.81 Code SA 03 SPN 2905 FMI 06

The module has detected that the current of the tranmission solenoid 7 is above normal.

The transmission module has detected excessive current in the solenoid circuit. The most likely cause is a short to ground or faulty solenoid.

Diagnosis and solution

1. Check the solenoid coil resistance.
- a) Turn the key start switch to the off position.
- b) Turn the battery disconnect switch to the off position.
- c) Disconnect the clutch solenoid from the harness.
- d) Check the resistance between contacts 1 and 2 of the solenoid.

Result

- The resistance is between 5 and 10 ohms.

  The solenoid is not the fault.

  Leave the solenoid disconnected.

  See step 2 to check for a short circuit.
- The resistance is at or near 0 ohms.

  Replace the solenoid.

  See step 3 to validate the repair.

2. Check the harness for a short circuit.
- a) Make sure the solenoid is still disconnected from the previous step.
- b) Disconnect J1 connector from the transmission module.
- c) Check the resistance between contacts J1-60 and J1-61 on the transmission module harness connector.

Result

- The resistance measurement is high (more than 1000 ohms).

  The harness is not shorted.

  See step 3 to validate.

- The resistance is at or near 0 ohms.

  Repair or replace the harness.

  See step 3 to validate the repair.

3. Check if the diagnostic code remains.

a) Check and clean the harness connector contacts.
b) Connect all the connectors.
c) Turn the battery disconnect switch to the on position.
d) Turn the key start switch to the on position.
e) Operate the machine at low idle.
f) Check if the diagnostic code remains.

Result

- SPN 2905 FMI 06 is not active.

  Stop.
- SPN 2905 FMI 06 is active.

  Failure of the transmission module is possible but not common. Exit the procedure and do the procedure again. If the diagnostic code remains active, replace the module.

  Stop.

10.6.81.1 Transmission clutch solenoid electrical schematic

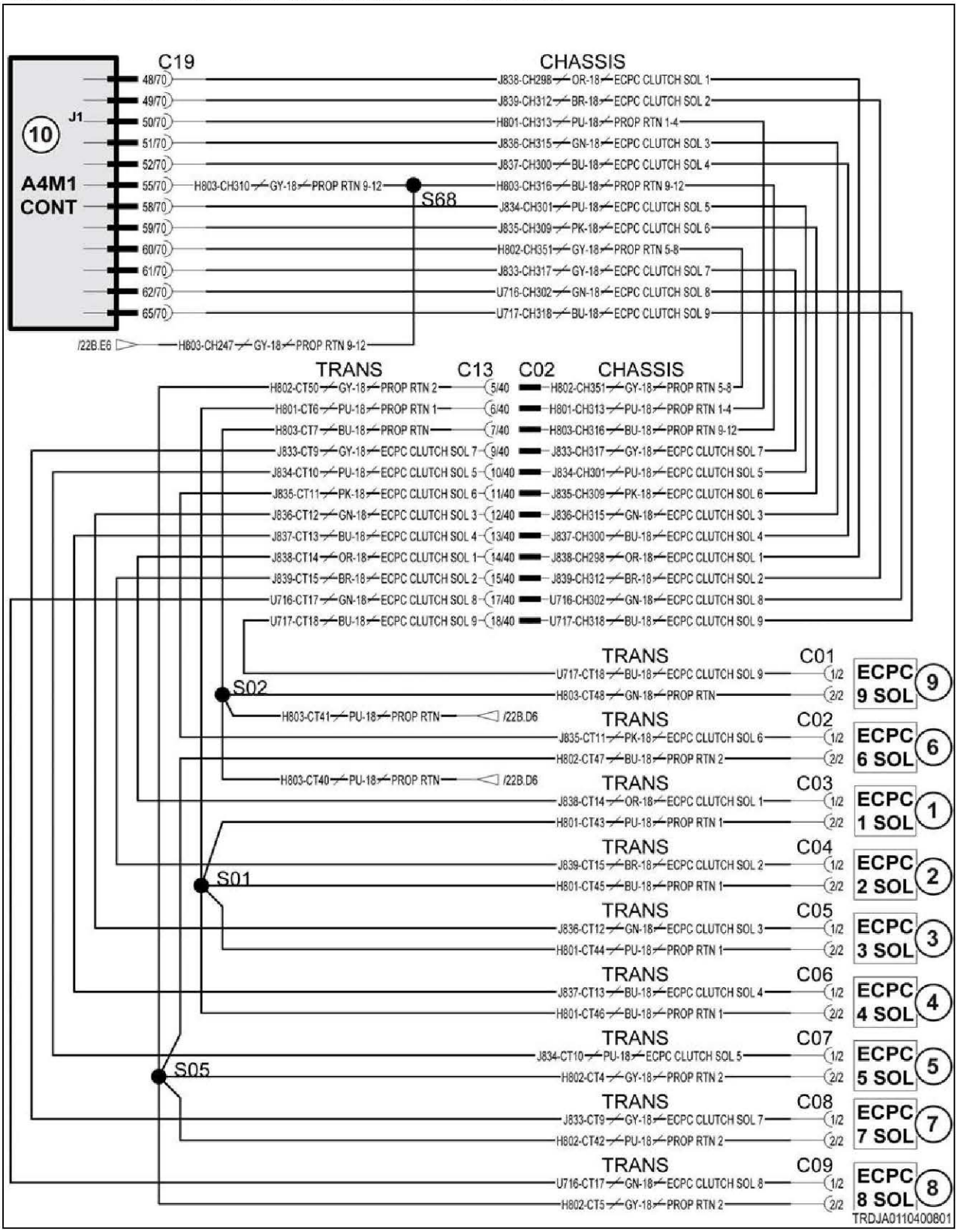

Fig. 231

Schematic legend		
Item	Schematic term	Description
1	ECPC 1 SOL	Electronic clutch pressure control solenoid 1
2	ECPC 2 SOL	Electronic clutch pressure control solenoid 2
3	ECPC 3 SOL	Electronic clutch pressure control solenoid 3
4	ECPC 4 SOL	Electronic clutch pressure control solenoid 4
5	ECPC 5 SOL	Electronic clutch pressure control solenoid 5
6	ECPC 6 SOL	Electronic clutch pressure control solenoid 6
7	ECPC 7 SOL	Electronic clutch pressure control solenoid 7
8	ECPC 8 SOL	Electronic clutch pressure control solenoid 8
9	ECPC 9 SOL	Electronic clutch pressure control solenoid 9
10	A4M1 CONT	Transmission module
--	PROP RTN	Proportional return

10.6.82 Code SA 03 SPN 2906 FMI 03

The module has detected that the voltage of the transmission clutch solenoid 8 circuit is above normal.

Diagnosis and solution

1. Check the solenoid circuit for a short to battery power.
a) Turn the key start switch to the off position.
b) Turn the battery disconnect switch to the off position.
c) Disconnect the connector at the solenoid.
d) Disconnect the J1 harness connector from the transmission module.
e) Check resistance from transmission module contact J1-62 to all other J1 contacts.

Result

- All resistance measurements are high (more than 1000 ohms).

  The harness is not shorted.

  See step 2 to validate.
- One or more resistance is at or near 0 ohms.

  Repair or replace the harness.

  See step 2 to validate the repair.

2. Check if the diagnostic code remains.
a) Inspect and clean the harness connector contacts.
b) Connect all the connectors.
c) Turn the battery disconnect switch to the on position.
d) Turn the key start switch to the on position.
e) Operate the machine at low idle.
f) Check if the diagnostic code remains.

Result

- SPN 2906 FMI 03 is not active.

  Stop.

- SPN 2906 FMI 03 is active.

  Failure of the transmission module is possible but not common. Exit the procedure and do the procedure again. If the diagnostic code remains active, replace the module.

  Stop.

10.6.82.1 Transmission clutch solenoid electrical schematic

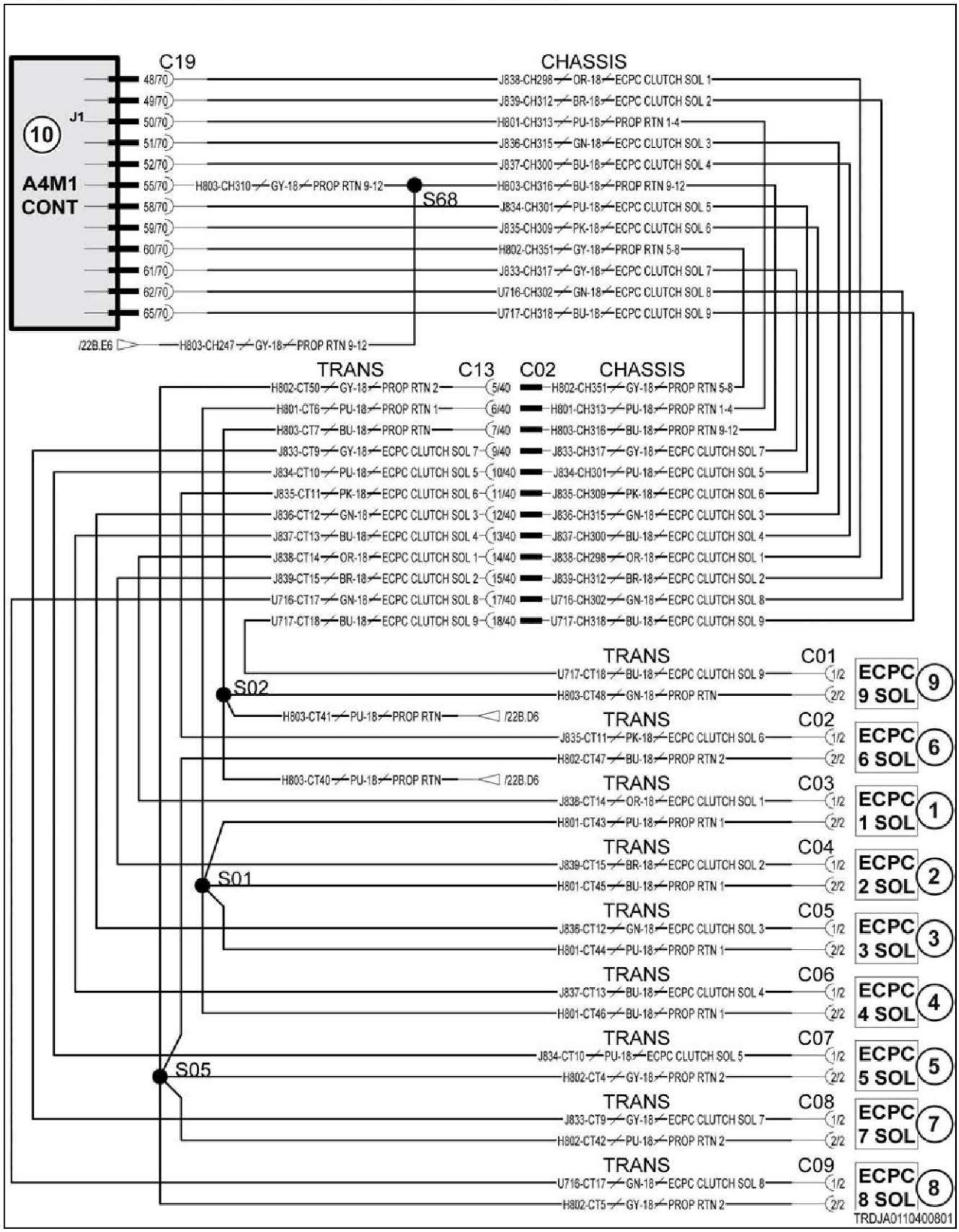

Fig. 232

Schematic legend		
Item	Schematic term	Description
1	ECPC 1 SOL	Electronic clutch pressure control solenoid 1
2	ECPC 2 SOL	Electronic clutch pressure control solenoid 2
3	ECPC 3 SOL	Electronic clutch pressure control solenoid 3
4	ECPC 4 SOL	Electronic clutch pressure control solenoid 4
5	ECPC 5 SOL	Electronic clutch pressure control solenoid 5
6	ECPC 6 SOL	Electronic clutch pressure control solenoid 6
7	ECPC 7 SOL	Electronic clutch pressure control solenoid 7
8	ECPC 8 SOL	Electronic clutch pressure control solenoid 8
9	ECPC 9 SOL	Electronic clutch pressure control solenoid 9
10	A4M1 CONT	Transmission module
--	PROP RTN	Proportional return

10.6.83 Code SA 03 SPN 2906 FMI 05

The module has detected that the current of the transmission solenoid 8 circuit is below normal.

The transmission module has detected an open circuit in the solenoid circuit. The most likely cause is a disconnected solenoid.

Diagnosis and solution

1. Check the solenoid coil resistance.
- a) Turn the key start switch to the off position.
- b) Turn the battery disconnect switch to the off position.
- c) Disconnect the clutch solenoid from the harness.
- d) Check the resistance between contacts 1 and 2 of the solenoid.

Result

- The resistance is between 5 and 10 ohms.

  The solenoid is not the fault.

  See step 2 to check for open circuit.
- The resistance is above 10 ohms.

  Replace the solenoid.

  See step 3 to validate the repair.

2. Check the harness for an open circuit.
- a) Install a shorting jumper between contacts 1 and 2 of the solenoid connector.
- b) Disconnect the J1 harness connector from the transmission module.
- c) Check the resistance between contacts J1-60 and J1-62 on the transmission module connector.

Result

- The resistance is at or near 0 ohms.

  The harness is not open.

  Remove the shorting jumper.

  See step 3 to validate the repair.

- The resistance is high (not near 0 ohms).

  Repair or replace the harness.

  See step 3 to validate the repair.

3. Check if the diagnostic code remains.

a) Check and clean the harness connector contacts.
b) Connect all the connectors.
c) Turn the battery disconnect switch to the on position.
d) Turn the key start switch to the on position.
e) Operate the machine at low idle.
f) Check if the diagnostic code remains.

Result

- SPN 2906 FMI 05 is not active.

  Stop.
- SPN 2906 FMI 05 is active.

  Failure of the transmission module is possible but not common. Exit the procedure and do the procedure again. If the diagnostic code remains active, replace the module.

  Stop.

10.6.83.1 Transmission clutch solenoid electrical schematic

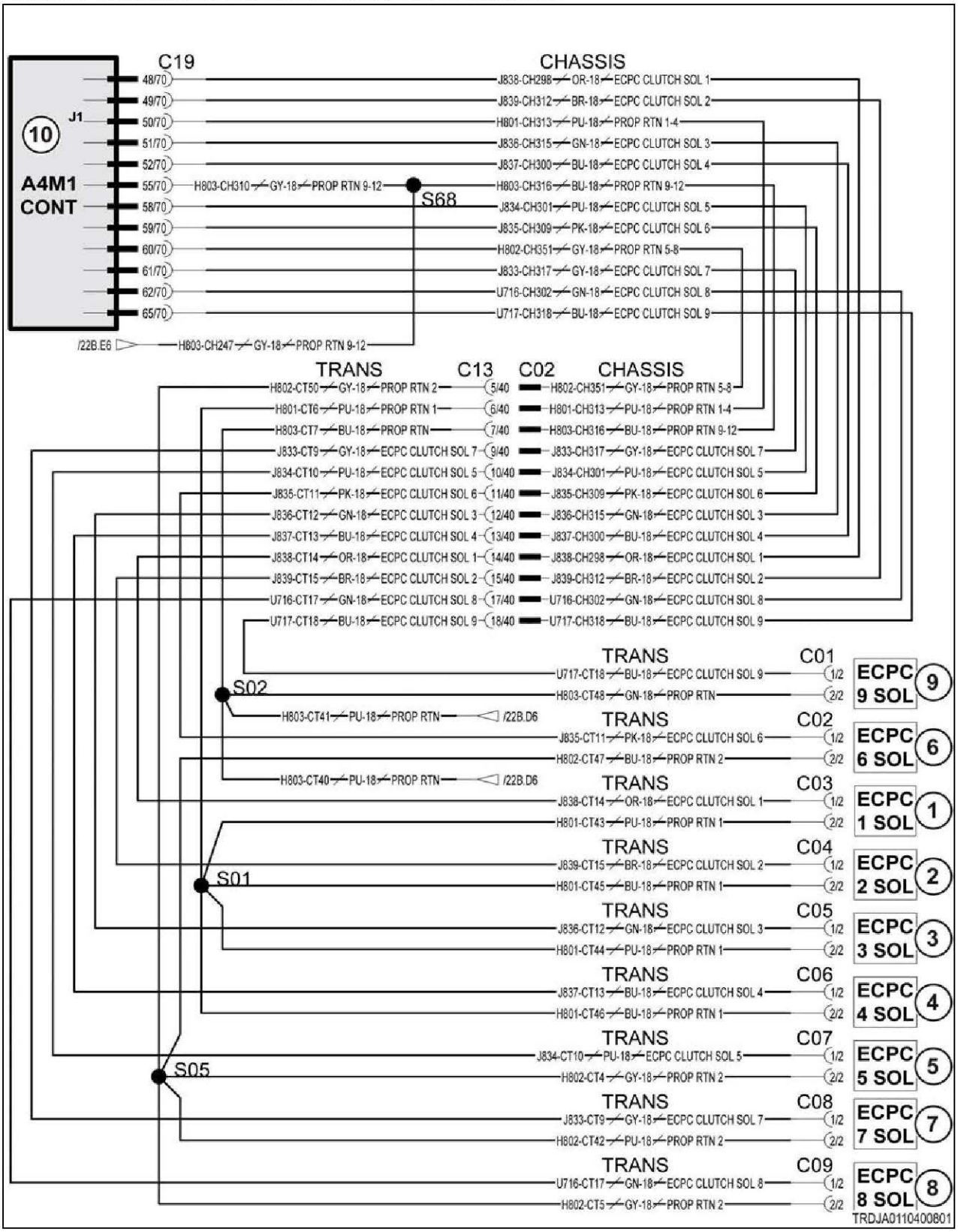

Fig. 233

Schematic legend		
Item	Schematic term	Description
1	ECPC 1 SOL	Electronic clutch pressure control solenoid 1
2	ECPC 2 SOL	Electronic clutch pressure control solenoid 2
3	ECPC 3 SOL	Electronic clutch pressure control solenoid 3
4	ECPC 4 SOL	Electronic clutch pressure control solenoid 4
5	ECPC 5 SOL	Electronic clutch pressure control solenoid 5
6	ECPC 6 SOL	Electronic clutch pressure control solenoid 6
7	ECPC 7 SOL	Electronic clutch pressure control solenoid 7
8	ECPC 8 SOL	Electronic clutch pressure control solenoid 8
9	ECPC 9 SOL	Electronic clutch pressure control solenoid 9
10	A4M1 CONT	Transmission module
--	PROP RTN	Proportional return

10.6.84 Code SA 03 SPN 2906 FMI 06

The module has detected that the current of the transmission solenoid 8 is above normal.

The transmission module has detected excessive current in the solenoid circuit. The most likely cause is a short to ground or faulty solenoid.

Diagnosis and solution

1. Check the solenoid coil resistance.
a) Turn the key start switch to the off position.
b) Turn the battery disconnect switch to the off position.
c) Disconnect the clutch solenoid from the harness.
d) Check the resistance between contacts 1 and 2 of the solenoid.

Result

- The resistance is between 5 and 10 ohms.

  The solenoid is not the fault.

  Leave the solenoid disconnected.

  See step 2 to check for a short circuit.
- The resistance is at or near 0 ohms.

  Replace the solenoid.

  See step 3 to validate the repair.

2. Check the harness for a short circuit.
a) Make sure the solenoid is still disconnected from the previous step.
b) Disconnect J1 connector from the transmission module.
c) Check the resistance between contacts J1-60 and J1-62 on the transmission module harness connector.

Result

- The resistance measurement is high (more than 1000 ohms).

  The harness is not shorted.

  See step 3 to validate.

- The resistance is at or near 0 ohms.

  Repair or replace the harness.

  See step 3 to validate the repair.

3. Check if the diagnostic code remains.

a) Check and clean the harness connector contacts.
b) Connect all the connectors.
c) Turn the battery disconnect switch to the on position.
d) Turn the key start switch to the on position.
e) Operate the machine at low idle.
f) Check if the diagnostic code remains.

Result

- SPN 2906 FMI 06 is not active.

  Stop.
- SPN 2906 FMI 06 is active.

  Failure of the transmission module is possible but not common. Exit the procedure and do the procedure again. If the diagnostic code remains active, replace the module.

  Stop.

10.6.84.1 Transmission clutch solenoid electrical schematic

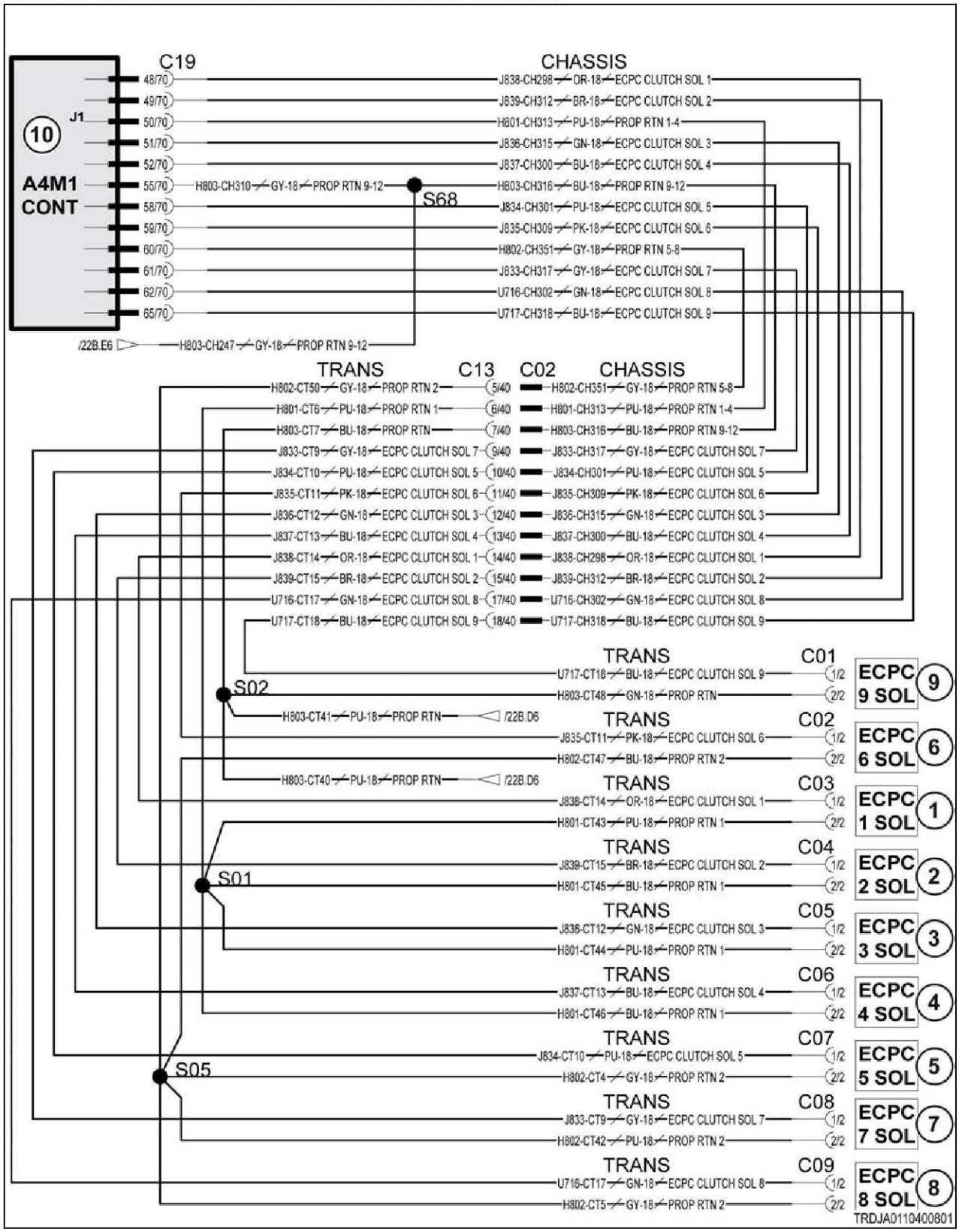

Fig. 234

Schematic legend		
Item	Schematic term	Description
1	ECPC 1 SOL	Electronic clutch pressure control solenoid 1
2	ECPC 2 SOL	Electronic clutch pressure control solenoid 2
3	ECPC 3 SOL	Electronic clutch pressure control solenoid 3
4	ECPC 4 SOL	Electronic clutch pressure control solenoid 4
5	ECPC 5 SOL	Electronic clutch pressure control solenoid 5
6	ECPC 6 SOL	Electronic clutch pressure control solenoid 6
7	ECPC 7 SOL	Electronic clutch pressure control solenoid 7
8	ECPC 8 SOL	Electronic clutch pressure control solenoid 8
9	ECPC 9 SOL	Electronic clutch pressure control solenoid 9
10	A4M1 CONT	Transmission module
--	PROP RTN	Proportional return

10.6.85 Code SA 03 SPN 2910 FMI 03

The module has detected that the voltage of the power take-off (PTO) clutch solenoid circuit is above normal.

- (1)PTO solenoid.

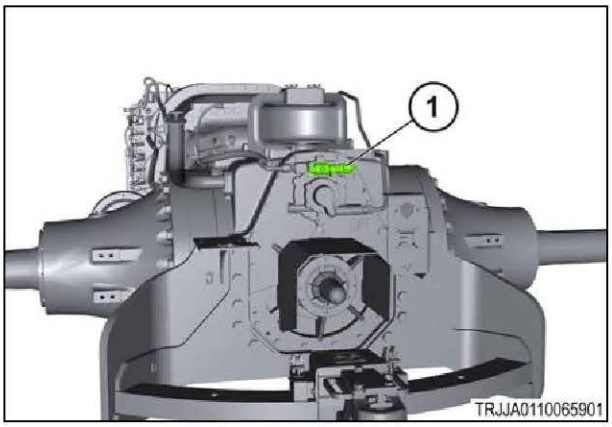

Fig. 235

Procedure

1. Check the solenoid circuit for a short to battery power.
   a) Turn the key start switch to the off position.
   b) Turn the battery disconnect switch to the off position.
   c) Disconnect the connector at the solenoid.
   d) Disconnect the J1 harness connector from the transmission module.
   e) Check resistance from transmission module contact J1-68 to all other J1 contacts.

Result

- All resistance measurements are high (more than 1000 ohms).

  The harness is not shorted.

  See step 2 to validate.
- One or more resistance is at or near 0 ohms.

  Repair or replace the harness.

  See step 2 to validate the repair.

2. Check if the diagnostic code remains.

a) Inspect and clean the harness connector contacts.
b) Connect all the connectors.
c) Turn the battery disconnect switch to the on position.
d) Turn the key start switch to the on position.
e) Operate the machine at low idle.
f) Check if the diagnostic code remains.

Result

- SPN 2910 FMI 03 is not active.

  Stop.
- SPN 2910 FMI 03 is active.

  Failure of the transmission module is possible but not common. Exit the procedure and do the procedure again. If the diagnostic code remains active, replace the module.

  Stop.

10.6.85.1 Implement oil filter bypass switch electrical schematic

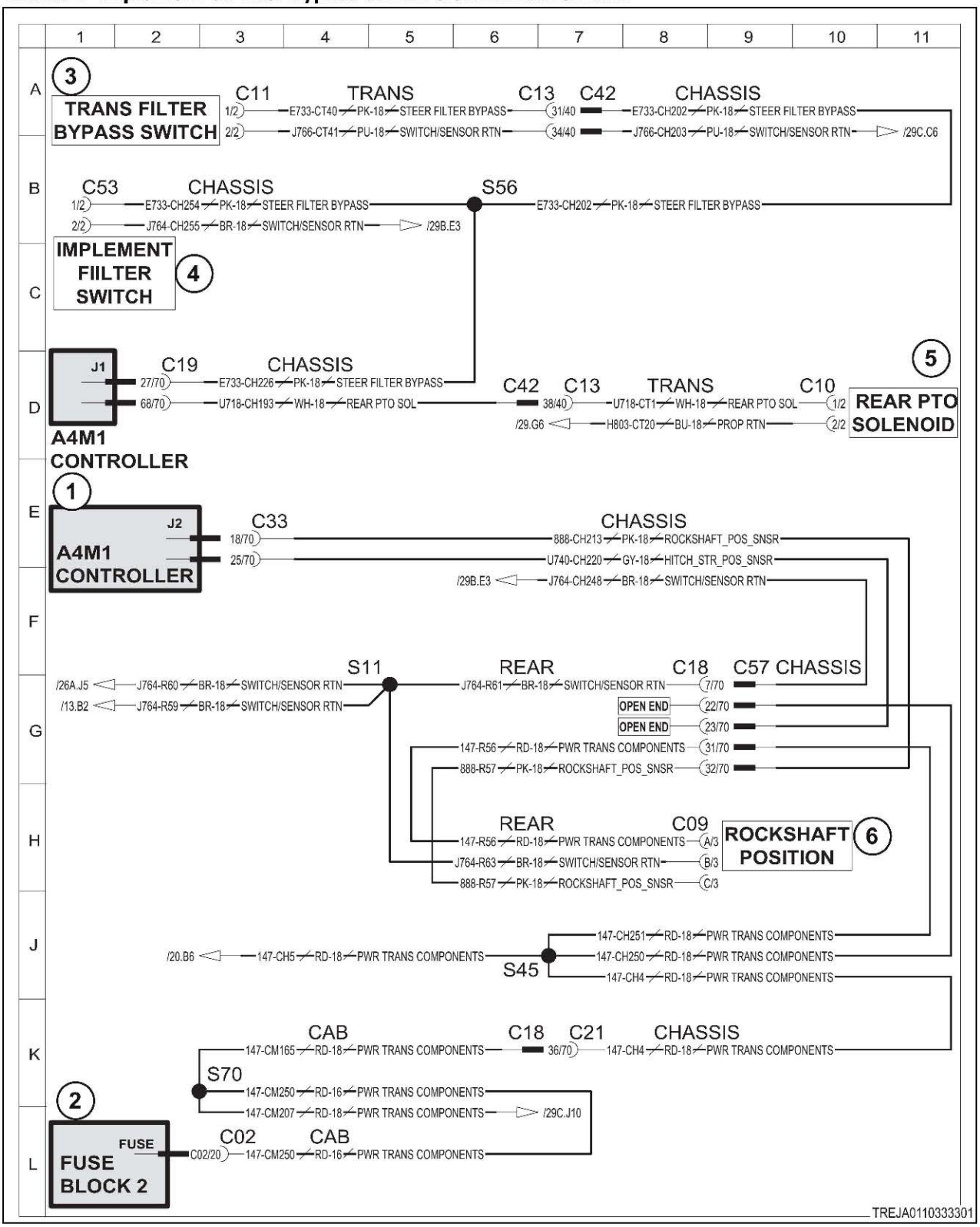

Fig. 236

Schematic legend		
Item	Schematic term	Description
1	A4M1 CONT	Transmission module
2	FUSE BLOCK 2	Fuse block 2
3	TRANS FILTER BYPASS SWITCH	Steering solenoid
4	IMPLEMENT FILTER SWITCH	Rear power take-off solenoid
5	REAR PTO SOLENOID	Rear PTO solenoid
6	ROCKSHAFT POSITION	Rockshaft position
--	CHASSIS	Chassis
--	REAR	Rear
--	PROP RTN	Proportional return
--	ON/OFF DRVR RTN	On/off driver return
--	ROCKSHAFT POSITION SENSOR	Rockshaft position sensor
--	STEERING FILTER BYPASS	Steering filter bypass
--	HITCH STR POS SNSR	Hitch steering position sensor
--	PWR TRANS COMPONENTS	Power to transmission components

10.6.86 Code SA 03 SPN 2910 FMI 05

The module has detected that the current of the power take-off (PTO) solenoid is below normal.

- (1)PTO solenoid.

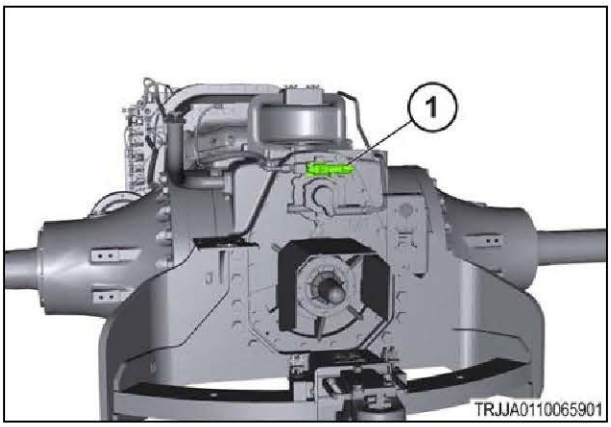

Fig. 237

Diagnosis and solution

1. Check the solenoid coil resistance.

a) Turn the key start switch to the off position.
b) Turn the battery disconnect switch to the off position.
c) Disconnect the PTO solenoid from the harness.
d) Check the resistance between contacts 1 and 2 of the solenoid.

Result

- The resistance is between 5 and 10 ohms.

  The solenoid is not the fault.

  See step 2 to check for open circuit.

- The resistance is above 10 ohms.

  Replace the solenoid.

  See step 3 to validate the repair.

2. Check the harness for an open circuit.

a) Install a shorting jumper between contacts 1 and 2 of the solenoid connector.
b) Disconnect the J1 harness connector from the transmission module.
c) Check the resistance between contacts J1-55 and J1-68 on the transmission module connector.

Result

- The resistance is at or near 0 ohms.

  The harness is not open.

  Remove the shorting jumper.

  See step 3 to validate.
- The resistance is high (not near 0 ohms).

  Repair or replace the harness.

  See step 3 to validate the repair.

3. Check if the diagnostic code remains.

a) Check and clean the harness connector contacts.
b) Connect all the connectors.
c) Turn the battery disconnect switch to the on position.
d) Turn the key start switch to the on position.
e) Operate the machine at low idle.
f) Engage the rear PTO.
g) Check if the diagnostic code remains.

Result

- SPN 2910 FMI 05 is not active.

  Stop.
- SPN 2910 FMI 05 is active.

  Failure of the transmission module is possible but not common. Exit the procedure and do the procedure again. If the diagnostic code remains active, replace the module.

  Stop.

10.6.86.1 Implement oil filter bypass switch electrical schematic

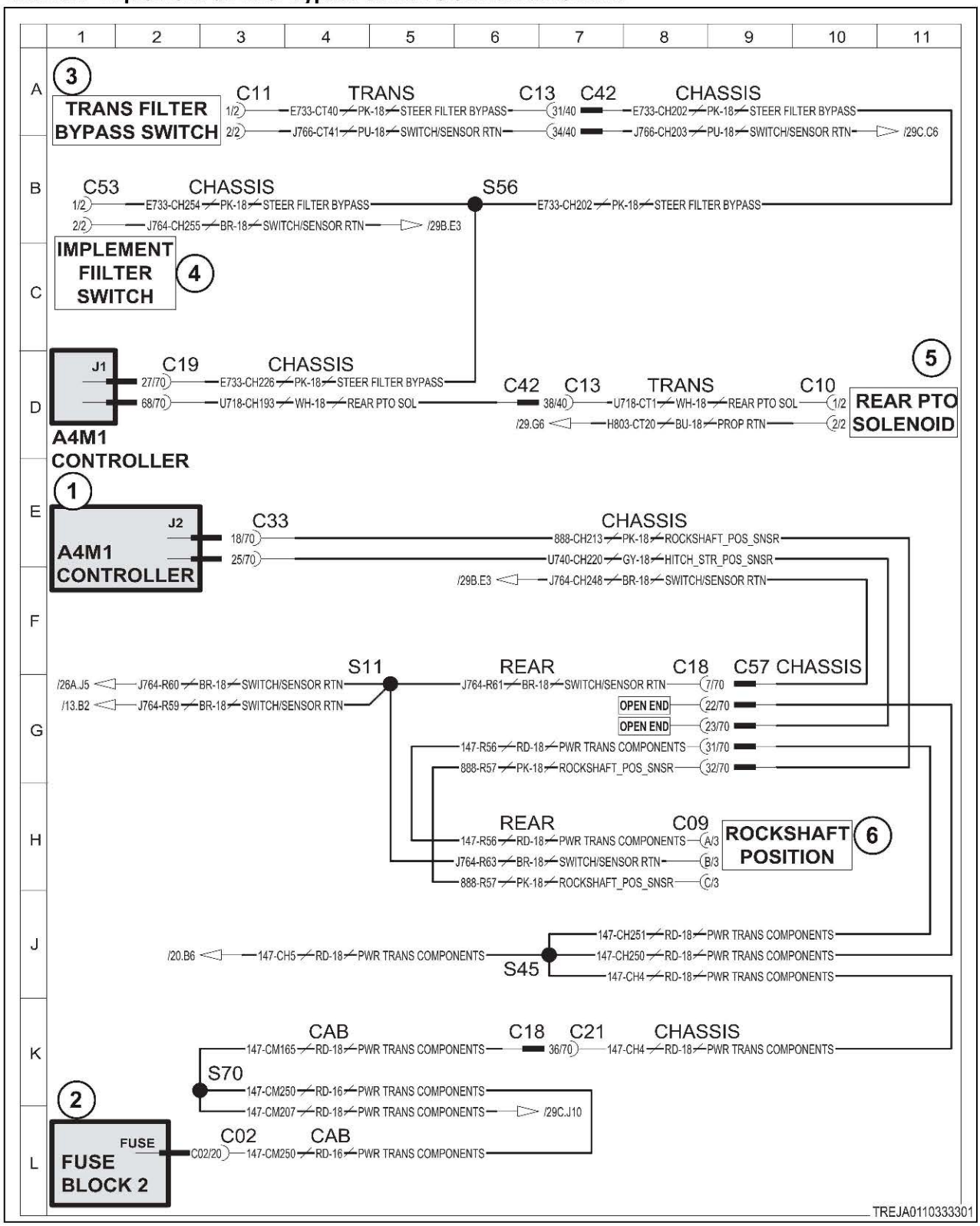

Fig. 238

Schematic legend		
Item	**Schematic term**	**Description**
1	A4M1 CONT	Transmission module
2	FUSE BLOCK 2	Fuse block 2
3	TRANS FILTER BYPASS SWITCH	Steering solenoid
4	IMPLEMENT FILTER SWITCH	Rear power take-off solenoid
5	REAR PTO SOLENOID	Rear PTO solenoid
6	ROCKSHAFT POSITION	Rockshaft position
--	CHASSIS	Chassis
--	REAR	Rear
--	PROP RTN	Proportional return
--	ON/OFF DRVR RTN	On/off driver return
--	ROCKSHAFT POSITION SENSOR	Rockshaft position sensor
--	STEERING FILTER BYPASS	Steering filter bypass
--	HITCH STR POS SNSR	Hitch steering position sensor
--	PWR TRANS COMPONENTS	Power to transmission components

10.6.87 Code SA 03 SPN 2910 FMI 06

The module has detected that the current of the power take-off (PTO) solenoid is above normal.

The transmission module has detected excessive current in the solenoid circuit. The most likely cause is a short to ground or faulty solenoid.

- (1)PTO solenoid.

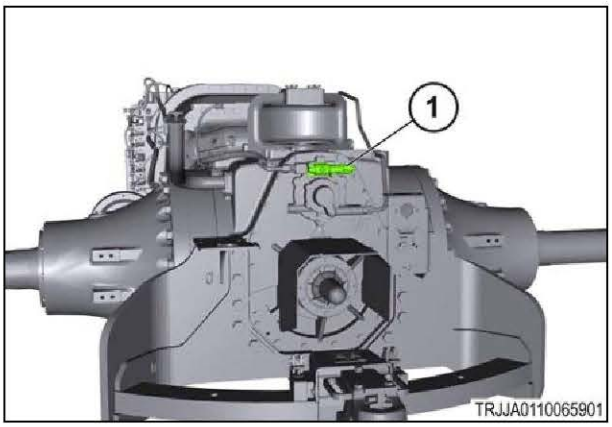

Fig. 239

Diagnosis and solution

1. Check the solenoid coil resistance.

a) Turn the key start switch to the off position.
b) Turn the battery disconnect switch to the off position.
c) Disconnect the PTO solenoid from the harness.
d) Check the resistance between contacts 1 and 2 of the solenoid.

Result

- The resistance is between 5 and 10 ohms.

  The solenoid is not the fault.

  Leave the solenoid disconnected.

  See step 2 to check for a short circuit.

- The resistance is at or near 0 ohms.

  Replace the solenoid.

  See step 3 to validate the repair.

2. Check the harness for a short circuit.

a) Make sure the solenoid is still disconnected from the previous step.
b) Disconnect J1 connector from the transmission module.
c) Check the resistance between contacts J1-55 and J1-68 on the transmission module harness connector.

Result

- The resistance measurement is high (more than 1000 ohms).

  The harness is not shorted.

  See step 3 to validate.
- The resistance is at or near 0 ohms.

  Repair or replace the harness.

  See step 3 to validate the repair.

3. Check if the diagnostic code remains.

a) Check and clean the harness connector contacts.
b) Connect all the connectors.
c) Turn the battery disconnect switch to the on position.
d) Turn the key start switch to the on position.
e) Operate the machine at low idle.
f) Engage the rear PTO.
g) Check if the diagnostic code remains.

Result

- SPN 2910 FMI 06 is not active.

  Stop.
- SPN 2910 FMI 06 is active.

  Failure of the transmission module is possible but not common. Exit the procedure and do the procedure again. If the diagnostic code remains active, replace the module.

  Stop.

10.6.87.1 Implement oil filter bypass switch electrical schematic

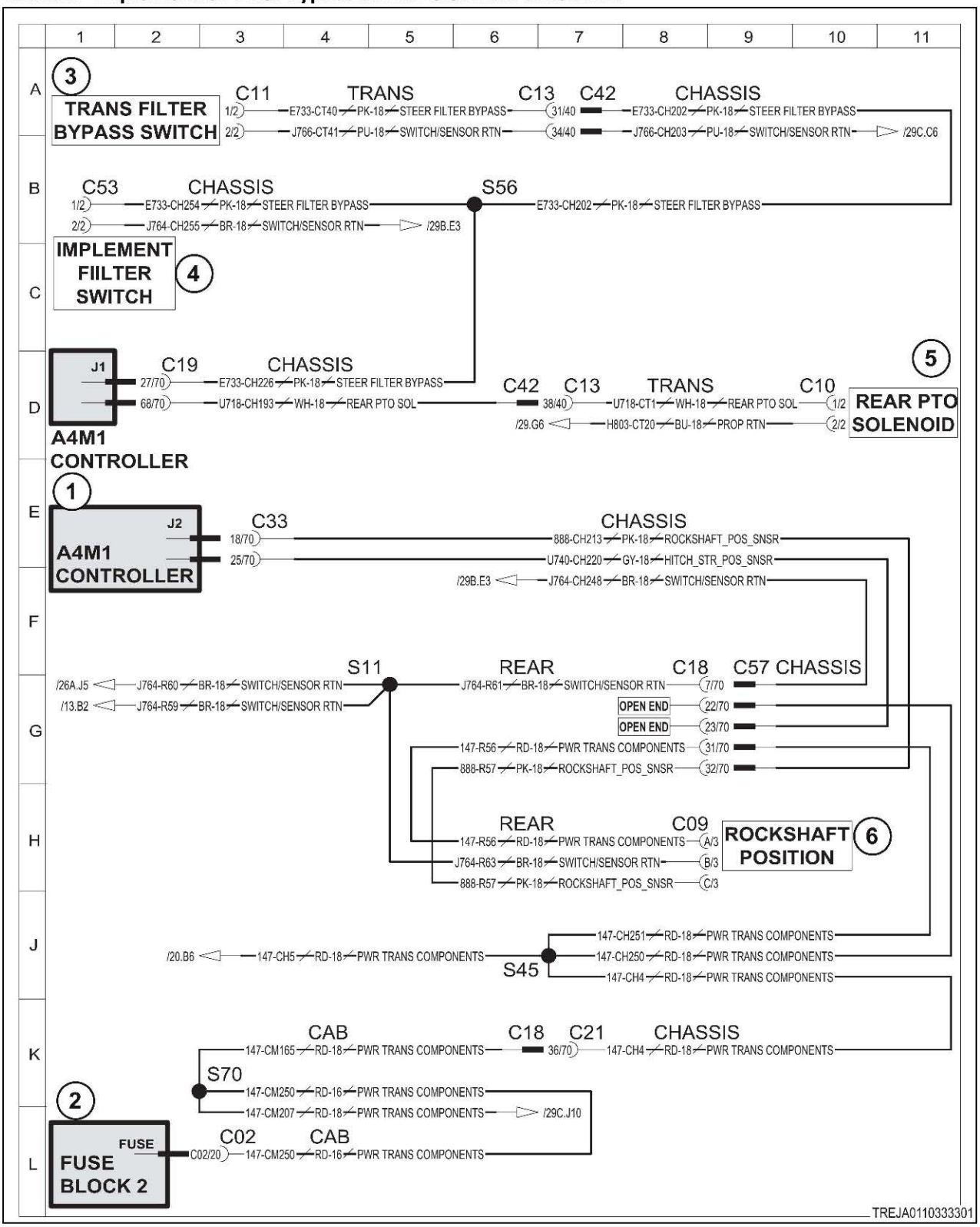

Fig. 240

Schematic legend		
Item	Schematic term	Description
1	A4M1 CONT	Transmission module
2	FUSE BLOCK 2	Fuse block 2
3	TRANS FILTER BYPASS SWITCH	Steering solenoid
4	IMPLEMENT FILTER SWITCH	Rear power take-off solenoid
5	REAR PTO SOLENOID	Rear PTO solenoid
6	ROCKSHAFT POSITION	Rockshaft position
--	CHASSIS	Chassis
--	REAR	Rear
--	PROP RTN	Proportional return
--	ON/OFF DRVR RTN	On/off driver return
--	ROCKSHAFT POSITION SENSOR	Rockshaft position sensor
--	STEERING FILTER BYPASS	Steering filter bypass
--	HITCH STR POS SNSR	Hitch steering position sensor
--	PWR TRANS COMPONENTS	Power to transmission components

10.6.88 Code SA 03 SPN 2924 FMI 14

The module has detected that the secondary steering data is not correct or out of calibration.

Diagnosis and solution

1. Check the harness for open circuit.

a) Turn the key start switch to the off position.
b) Turn the battery disconnect switch to the off position.
c) Remove the key from the battery disconnect switch.
d) Disconnect the secondary steer solenoid harness connector.
e) Put a jumper wire between contact 1 and contact 2 of the secondary steer solenoid.
f) Disconnect the J2 connector from the transmission module.
g) Check the resistance between contact 6 and contact 8 of the J2 connector.

Result

Expected results - the resistance is less than 5 ohms.

Results:

- Yes - the resistance is less than 5 ohms.
- No - the resistance is not less than 5 ohms.

  The harness is bad.

  Repair: Repair or replace the harness.

2. Check the harness for short-circuit.

a) Turn the key start switch to the off position.
b) Turn the battery disconnect switch to the off position.
c) Remove the key from the battery disconnect switch.
d) Disconnect the secondary steer solenoid harness connector.
e) Disconnect the J2 connector from the transmission module.
f) Check the resistance between contact 1 and contact 2 of the secondary steer solenoid harness connector.

Result

Expected results - the resistance is more than 5000 ohms.

Results:

- Yes - the resistance is more than 5000 ohms.
- No - the resistance is not more than 5000 ohms.

  The harness is bad.

  Repair: Repair or replace the harness.

3. Check the secondary steer solenoid.

a) Replace the secondary steer solenoid with a good secondary steer solenoid.
b) Check for active diagnostic code.

Result

Expected results - code SPN 2924 FMI 14 is not active.

Results:

- Yes - code SPN 2924 FMI 14 is not active.

  Stop.
- No - code SPN 2924 FMI 14 is active.

4. Check if the diagnostic code remains.

a) Check the contacts of the connectors and clean the contacts.
b) Connect all the connectors.
c) Turn the battery disconnect switch to the on position.
d) Turn the key start switch to the on position.
e) Turn on the engine.
f) Operate the engine at high idle.
g) Check if the diagnostic code remains.

Result

Expected result - the diagnostic code is not active.

Results:

- Yes - SPN 2924 FMI 14 is not active.

  Stop.
- No - SPN 2924 FMI 14 is active.

  Failure of the transmission module is possible but not common. Exit the procedure and do the procedure again. If the diagnostic code remains active, replace the module.

  Stop.

10.6.88.1 Implement oil filter bypass switch electrical schematic

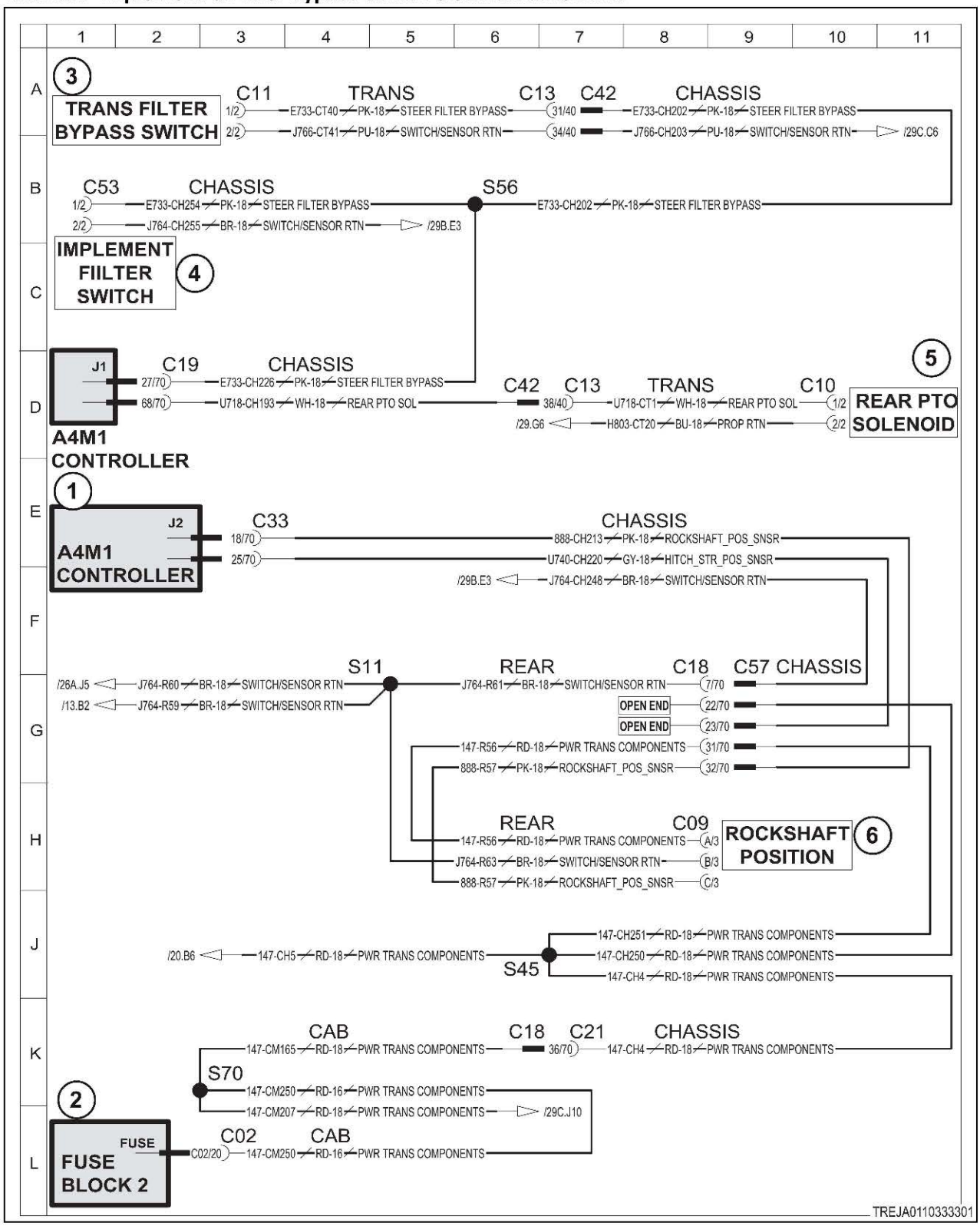

Fig. 241

Schematic legend		
Item	**Schematic term**	**Description**
1	A4M1 CONT	Transmission module
2	FUSE BLOCK 2	Fuse block 2
3	TRANS FILTER BYPASS SWITCH	Steering solenoid
4	IMPLEMENT FILTER SWITCH	Rear power take-off solenoid
5	REAR PTO SOLENOID	Rear PTO solenoid
6	ROCKSHAFT POSITION	Rockshaft position
--	CHASSIS	Chassis
--	REAR	Rear
--	PROP RTN	Proportional return
--	ON/OFF DRVR RTN	On/off driver return
--	ROCKSHAFT POSITION SENSOR	Rockshaft position sensor
--	STEERING FILTER BYPASS	Steering filter bypass
--	HITCH STR POS SNSR	Hitch steering position sensor
--	PWR TRANS COMPONENTS	Power to transmission components

10.6.89 Code SA 03 SPN 3454 FMI 02

The rear fender 3-point hitch elevation switch signal is not correct.

The hitch elevation switches consist of a pair of momentary contacts to manually raise or lower the hitch. Additionally, there is a switch-pair located on each fender, and these switch-pairs are connected in parallel. The mostly likely cause for the error is that the transmission module is detecting both raise and lower contacts being active simultaneously.

Diagnosis and solution

1. Check for outward signs that one of the switches is stuck.

a) Turn the key start switch to the off position.

b) Turn the battery disconnect switch to the off position.

c) Manually actuate both right fender and left fender switches.

- Press and release the hitch raise button.
- Press and release the hitch lower button.
- Repeat for both right and left fender switch-pairs.

Result

When released, the button should return to its relaxed, extended position.

- One or more buttons did not return to its relaxed position when released.

  Replace the switch.

  See step 6 to validate the repair.
- All of the switches appeared to operate correctly.

  See step 2 to check the electrical operation of the switches and harness.

2. Check for short circuit at the transmission module.

a) Disconnect the J1 harness connector from the transmission module.

b) Check resistance between contacts J1-56 and J1-43 at the transmission module harness connector.

c) Check resistance between contacts J1-56 and J1-63 at the transmission module harness.

Result

- Neither resistance measurement was at or near 0 ohms (not short circuited).

  The switches are not likely at fault.

  See step 3 to check for short between signal wires.
- Either resistance measurement was at or near 0 ohms.

  Make note of which contacts indicated short.

  See step 4 to isolate right from left switches.

3. Check for short between signal wires.

a) Check the resistance between contacts J1-43 and J1-63 at the transmission module harness connector.

Result

- The resistance is at or near 0 ohms.

  One of the harnesses is shorted.

  See step 5 to isolate left and right fender harnesses.
- The resistance is high (not near 0 ohms).

  See step 6 to check if the error code has cleared.

4. Isolate right and left switches.

a) While monitoring the resistance of the short circuit detected in step 2, disconnect the right fender switch.

Result

- The short circuit cleared (resistance rose).

  The right fender switch is at fault.

  Replace the switch.

  See step 6 to validate the repair.
- The short circuit did not clear (resistance remained at or near 0 ohms).

  Leave the right switch disconnected.

  Continue to the left switch.

b) While monitoring the resistance of the short circuit detected in step 2, disconnect the left fender switch.

Result

- The short circuit cleared (resistance rose).

  The left fender switch is at fault.

  Replace the switch.

  See step 6 to validate the repair.
- The short circuit did not clear (resistance remained at or near 0 ohms).

  One of the harnesses is shorted.

  See step 5 to isolate the right and left fender harnesses.

5. Isolate the right and left fender harnesses.

a) While monitoring the resistance of the short circuit detected above (either in step 2 or step 3), disconnect the right fender harness from the chassis harness.

Result

- The short circuit cleared (resistance rose).

  The right fender harness is at fault.

  Repair or replace the harness.

  See step 6 to validate the repair.
- The short circuit did not clear (resistance remained at or near 0 ohms).

  Leave the right harnesses disconnected.

  Continue to the left harness.

b) While monitoring the resistance of the short circuit detected above (either in step 2 or step 3), disconnect the left fender harness from the chassis harness.

Result

- The short circuit cleared (resistance rose).

  The left fender harness is at fault.

  Repair or replace the harness.

  See step 6 to validate the repair.
- The short circuit did not clear (resistance remained at or near 0 ohms).

  The chassis harness is at fault.

  Repair or replace the chassis harness.

  See step 6 to validate the repair.

6. Check if the diagnostic code remains.

a) Inspect and clean the harness connector contacts.
b) Connect all connectors and switches.
c) Turn the battery disconnect switch to the on position.
d) Turn the key start switch to the on position.
e) Operate both right and left fender switches (not at the same time).
f) Check if the diagnostic code remains.

Result

- SPN 3454 FMI 02 is not active.

  Stop.
- SPN 3454 FMI 02 is active.

  Failure of the transmission module is possible but not common. Exit the procedure and do the procedure again. If the diagnostic code remains active, replace the module.

  Stop.

10.6.89.1 Rear hitch controls electrical schematic

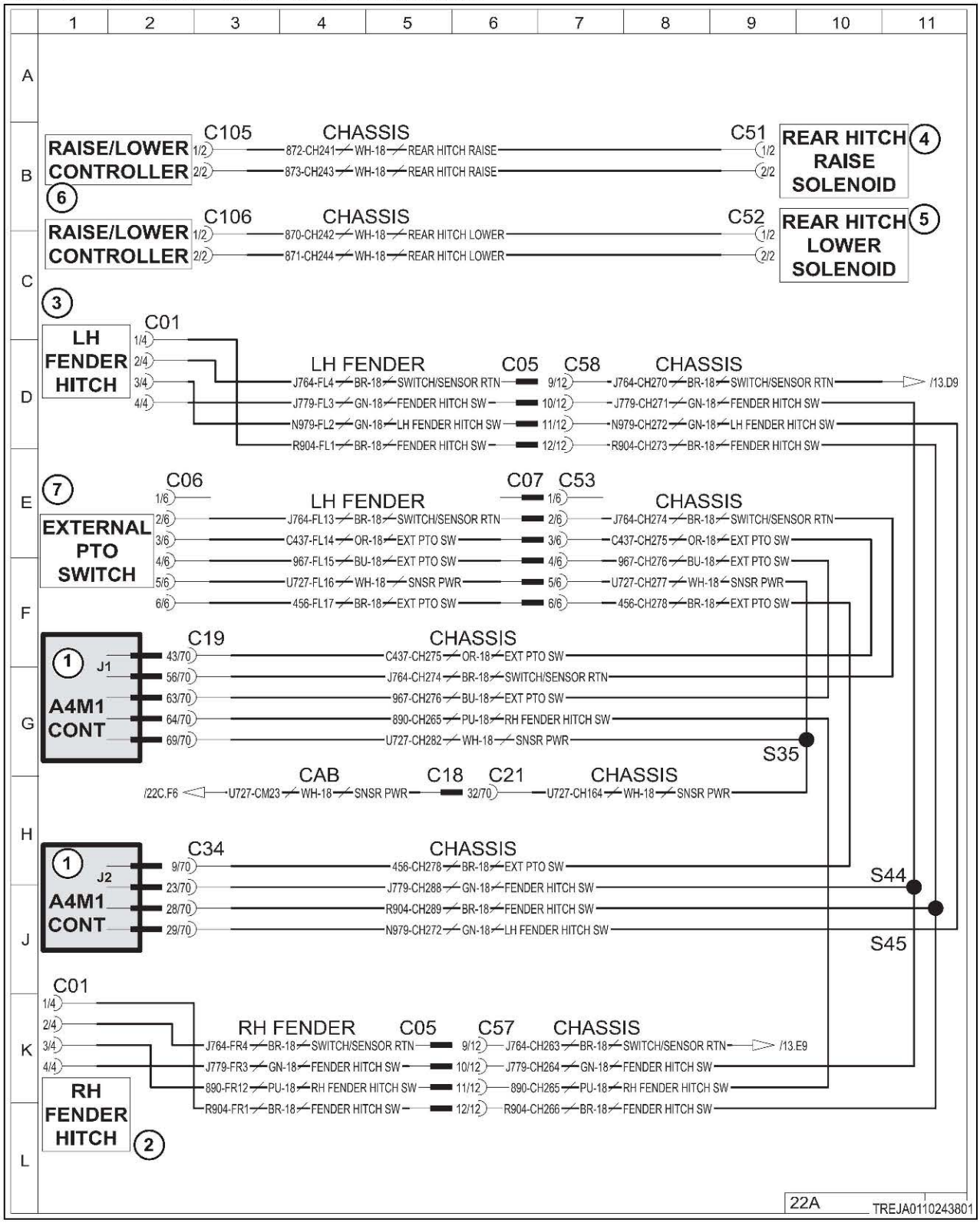

Fig. 242

Schematic legend		
Item	**Schematic term**	**Description**
1	A4M1 CONT	Transmission module
2	RH FENDER HITCH SWITCH	Right-hand fender hitch switch
3	LH FENDER HITCH SWITCH	Left-hand fender hitch switch
4	REAR HITCH RAISE SOLENOID	Rear hitch raise solenoid
5	REAR HITCH LOWER SOLENOID	Rear hitch lower solenoid
6	RAISE/LOWER CONTROLLER	Raise/lower controller
7	EXTERNAL PTO SWITCH	External PTO switch
--	HITCH FENDER SW LOWER	Hitch fender switch lower
--	HITCH FENDER SW RAISE	Hitch fender switch raise
--	HITCH FENDER SW COM	Hitch fender switch common

10.6.90 Code SA 03 SPN 3509 FMI 03

The module has detected that the voltage of the 5 volt sensor supply circuit is above normal.

The 5 volt sensor supply provides power to the hydraulic pressure sensor. The most likely cause for the error is a short to battery power.

Diagnosis and solution

1. Check the harness for a short to power.

a) Turn the key start switch to the off position.
b) Turn the battery disconnect switch to the off position.
c) Disconnect the hydraulic pressure sensor from the harness.
d) Disconnect the J1 connector from the transmission module.
e) Check the resistance from contact J1-11 to all other contacts on the J1 connector.

Result

- All resistance readings are high (open circuit).

  The transmission module may be at fault.

  See step 2 to see if the error code persists.
- Any resistance reading is at or near 0 ohms.

  Repair or replace the harness.

  See step 2 to validate the repair.

2. Check if the diagnostic code remains.

a) Inspect and clean the harness connector contacts.
b) Connect all the connectors.
c) Turn the battery disconnect switch to the on position.
d) Turn the key start switch to the on position.
e) Operate the machine at low idle.
f) Check if the diagnostic code remains.

Result

- SPN 3509 FMI 03 is not active.

  Stop.

- SPN 3509 FMI 03 is active.

  Failure of the transmission module is possible but not common. Exit the procedure and do the procedure again. If the diagnostic code remains active, replace the module.

  Stop.

10.6.90.1 5 volt sensor supply electrical schematic

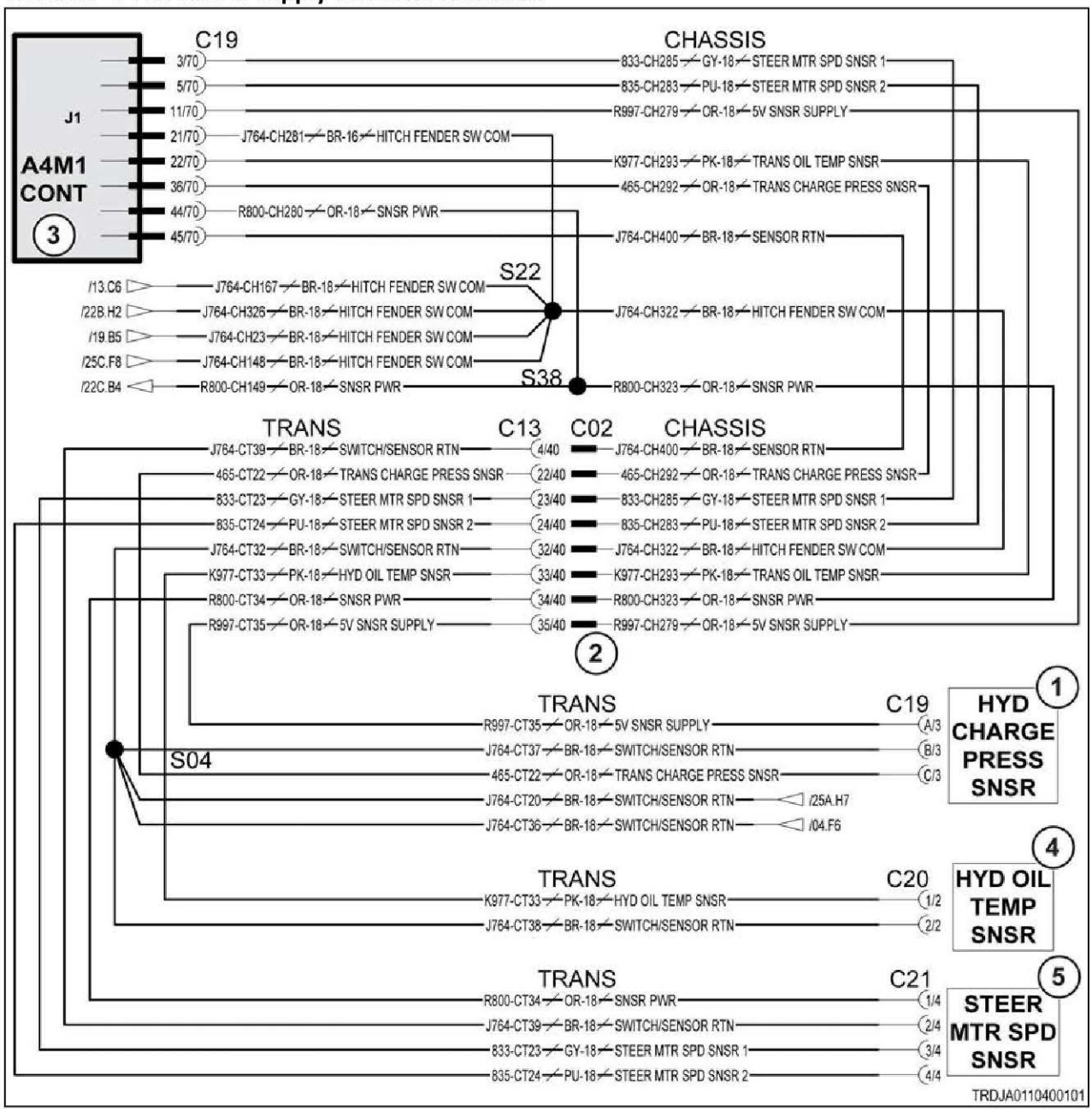

Fig. 243

Schematic legend		
Item	**Schematic term**	**Description**
1	HYD CHARGE PRESS SNSR	Hydraulic charge pressure sensor
2	Chassis to transmission connectors	Chassis to transmission connectors
3	A4M1 CONT	Transmission module
4	HYD OIL TEMP SNSR	Hydraulic oil temperature sensor

Schematic legend		
Item	Schematic term	Description
5	STEER MTR SPD SNSR	Steering motor speed sensor
--	5V SNSR SUPPLY	5 volt sensor supply
--	HITCH FENDER SW COM	Hitch fender switch common
--	TRANS CHARGE PRESS SNSR	Transmission charge pressure sensor
--	SNSR PWR	Sensor power
--	SENSOR RTN	Sensor return

10.6.91 Code SA 03 SPN 3509 FMI 04

The module has detected that the voltage of the 5 volt sensor supply circuit is below normal.

The 5 volt sensor supply provides power to the hydraulic pressure sensor. The most likely cause for the error is a short to ground or a faulty sensor.

Diagnosis and solution

1. Check the sensor.

a) Turn the key start switch to the on position, but don't start the machine.
b) Verify that the error code is being reported (SA 03 SPN 3509 FMI 04).
c) Disconnect the transmission hydraulic pressure sensor.
d) Check the existing error code.

Result

- The error code changed from SPN 3509 FMI 04 (voltage too low) to SPN 3509 FMI 03 (voltage too high).

  Replace the charge pressure sensor.

  Validate the repair.
- SPN 3509 FMI 04 is still being reported (regardless of any other new codes).

  The sensor is likely not the cause.

  Leave the sensor disconnected.

  See step 2 to check the harness for short to ground.

2. Check the harness for short to ground.

a) Turn the key start switch to the off position.
b) Turn the battery disconnect switch to the off position.
c) Disconnect the J1 connector from the transmission module.
d) Check the resistance from contact J1-11 to all other J1 contacts.

Result

- All resistance measurements are high (more than 100 ohms).

  The harness is not shorted.

  See step 3 to check if the error persists.
- One or more resistance measurement is at or near 0 ohms.

  Repair or replace the harness.

  See step 3 to validate the repair.

3. Check if the diagnostic code remains.

a) Inspect and clean the harness connector contacts.
b) Connect all the connectors.
c) Turn the battery disconnect switch to the on position.
d) Turn the key start switch to the on position.
e) Operate the machine at low idle.
f) Check if the diagnostic code remains.

Result

- SPN 3509 FMI 04 is not active.

  Stop.
- SPN 3509 FMI 04 is active.

  Failure of the transmission module is possible but not common. Exit the procedure and do the procedure again. If the diagnostic code remains active, replace the module.

  Stop.

10.6.91.1 5 volt sensor supply electrical schematic

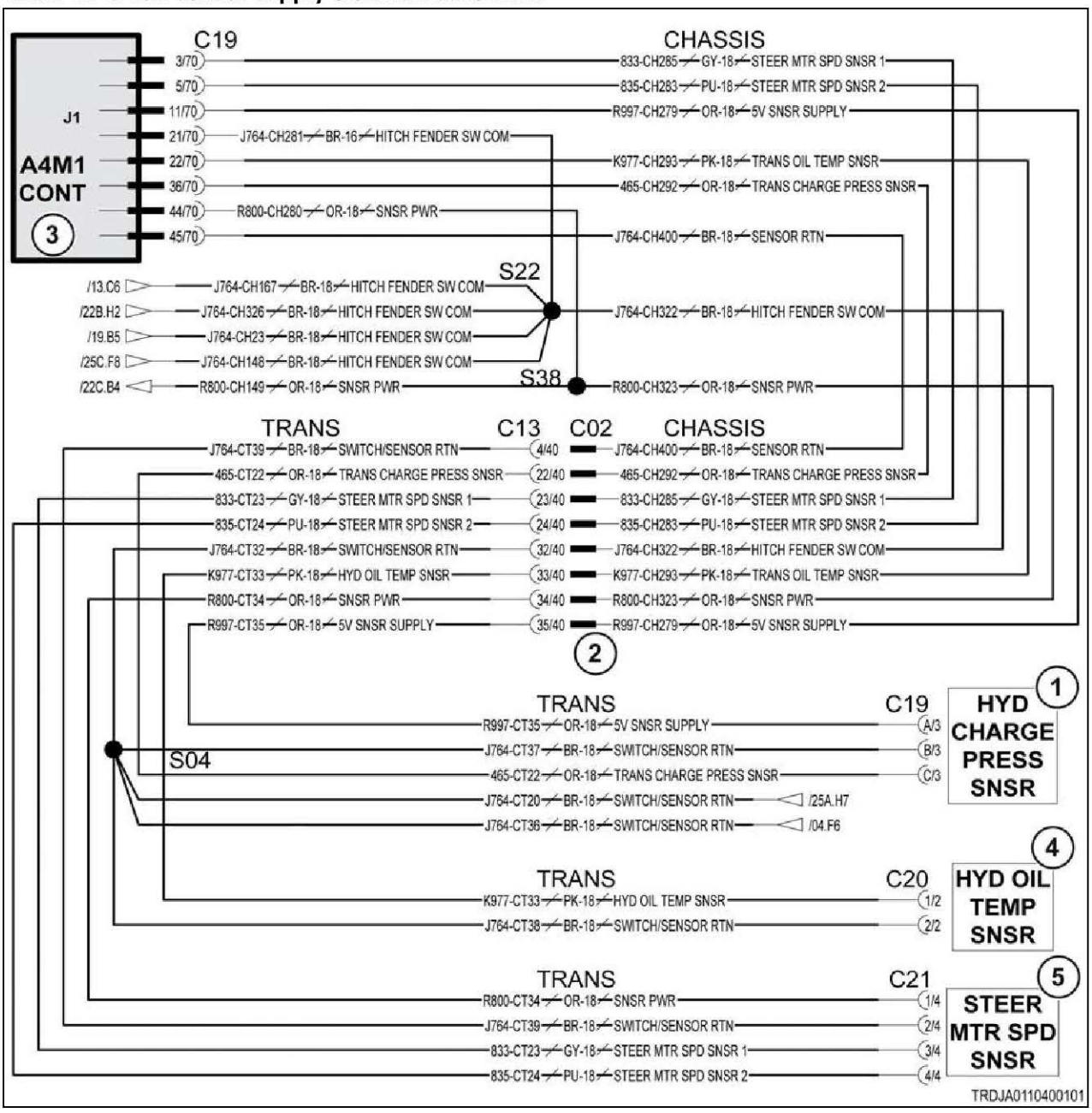

Fig. 244

Schematic legend		
Item	**Schematic term**	**Description**
1	HYD CHARGE PRESS SNSR	Hydraulic charge pressure sensor
2	Chassis to transmission connectors	Chassis to transmission connectors
3	A4M1 CONT	Transmission module
4	HYD OIL TEMP SNSR	Hydraulic oil temperature sensor
5	STEER MTR SPD SNSR	Steering motor speed sensor
--	5V SNSR SUPPLY	5 volt sensor supply
--	HITCH FENDER SW COM	Hitch fender switch common

Schematic legend		
Item	Schematic term	Description
--	TRANS CHARGE PRESS SNSR	Transmission charge pressure sensor
--	SNSR PWR	Sensor power
--	SENSOR RTN	Sensor return

10.6.92 Code SA 03 SPN 3513 FMI 03

The module has detected that the voltage of the 10 volt sensor supply circuit is above normal.

The transmission module produces a 10-volt output power that is utilized by the hitch elevation switches on the rear fenders and the steering sensor in the cab. The most likely cause for this error is a short to battery power.

Diagnosis and solution

1. Check the 10-volt power circuit for a short-circuit.
- a) Turn the key start switch to the off position.
- b) Turn the battery disconnect switch to the off position.
- c) Disconnect the J1 harness connector from the transmission module.
- d) Check the resistance from contact J1-69 to all other J1 connector contacts.

Result

- All resistance measurements are high (more than 100 ohms).

  See step 7 to check if the error persists and the module is at fault.
- One or more resistance measurement is at or near 0 ohms.

  Make note of which contact(s) indicated a short to J1-69.

  See step 2 to isolate the right fender.

2. Isolate the right fender harness and switch.
- a) Disconnect the right fender harness from the chassis harness (located just below the rear of the cab).
- b) Re-check the resistance measurements from contact J1-69 to the remaining J1 contact(s) that previously indicated short circuit in step 1.

Result

- All resistance measurements are high (more than 100 ohms).

  The short circuit exists in the right fender harness or switch.

  See step 4 to isolate the switch from the fender harness.
- One or more resistance measurements remain at or near 0 ohms.

  The right fender harness is not likely the cause.

  Leave the right fender harness disconnected.

  See step 3 to isolate the left fender.

3. Isolate the left fender harness and switch.
- a) Disconnect the left fender harness from the chassis harness (located just below the rear of the cab).
- b) Re-check the resistance measurements from contact J1-69 to the remaining J1 contact(s) that previously indicated short circuit in step 1.

Result

- All resistance measurements are high (more than 100 ohms).

  The short circuit exists in the left fender harness or switch.

  See step 4 to isolate the switch from the fender harness.
- One or more resistance measurements remain at or near 0 ohms.

  The left fender harness is not likely the cause.

  See step 5 to isolate the cab harness.

4. Check the fender harness for short circuit.

a) Examine the right or left fender harness, depending on which side indicated the short circuit in steps 2 or 3.

b) Disconnect the 3-point hitch elevation switch from the fender harness.

c) Check the resistance between contact 5 and all other harness connector contacts.

Result

- All resistance measurements are high (more than 100 ohms).

  The short circuit exists in the hitch elevation switch.

  Replace the hitch elevation switch.

  See step 7 to validate the repair.
- One or more resistance measurements is at or near 0 ohms.

  The fender harness is faulty.

  Repair or replace the fender harness.

  See step 7 to validate the repair.

5. Isolate the cab harness.

a) Make sure the two fender harnesses are still disconnected from the previous steps.

b) Disconnect the cab harness from the chassis harness (located just above the transmission module).

c) Re-check the resistance measurements from contact J1-69 to the remaining J1 contact(s) that previously indicated short circuit in step 1.

Result

- All resistance measurements are high (more than 100 ohms).

  The short circuit exists in the cab harness or sensor.

  see step 6 to isolate the sensor from the harness.
- One or more resistance measurements is at or near 0 ohms.

  The chassis harness is faulty.

  Repair or replace the chassis harness.

  See step 7 to validate the repair.

6. Check the cab harness for short circuit.

a) Disconnect the steering sensor from the cab harness.

b) Check the resistance between contact C18-32 of the cab harness and all other C18 harness connector contacts.

Result

- All resistance measurements are high (more than 100 ohms).

  The short circuit exists in the steering sensor.

  Replace the steering sensor.

  See step 7 to validate the repair.
- One or more resistance measurements is at or near 0 ohms.

  The cab harness is faulty.

  Repair or replace the cab harness.

  See step 7 to validate the repair.

7. Check if the diagnostic code remains.

a) Connect all the connectors, sensor, and switches.
b) Turn the battery disconnect switch to the on position.
c) Turn the key start switch to the on position.
d) Operate the machine at low idle.
e) Check if the diagnostic code remains.

Result

- SPN 3513 FMI 03 is not active.

  Stop.
- SPN 3513 FMI 03 is active.

  Failure of the transmission module is possible but not common. Exit the procedure and do the procedure again. If the diagnostic code remains active, replace the module.

  Stop.

10.6.92.1 10 volt sensor supply electrical schematic

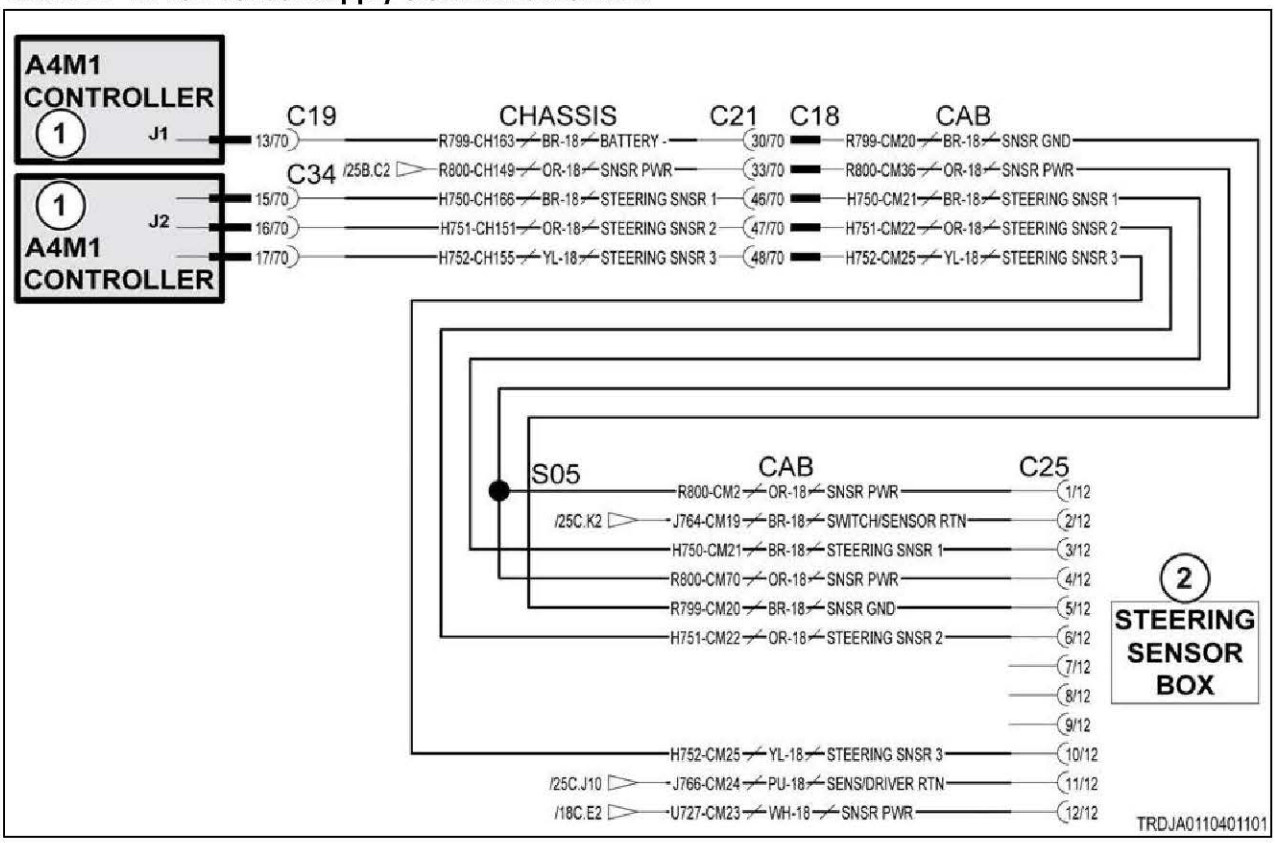

Fig. 245

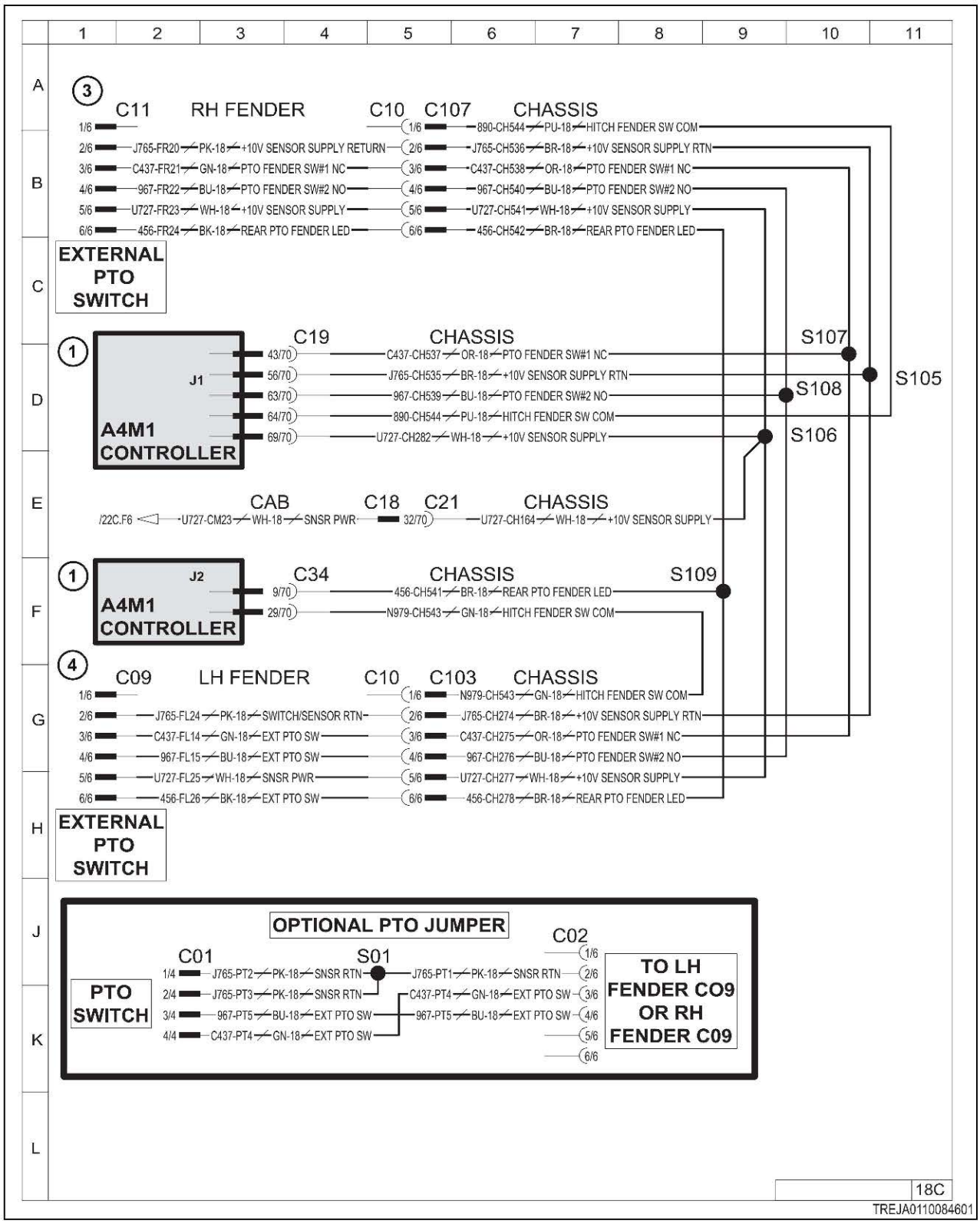

Fig. 246

Schematic legend		
Item	**Schematic term**	**Description**
1	A4M1 CONT	Transmission module
2	STEERING SENSOR BOX	Steering sensor box
3	RH FENDER	Right-hand fender harness

Schematic legend		
Item	Schematic term	Description
4	LH FENDER	Left-hand fender harness
--	EXTERNAL PTO SWITCH	External PTO switch
--	10V SENSOR SUPPLY	10 volt sensor supply
--	10V SENSOR SUPPLY RTN	10 volt sensor supply return
--	PTO FENDER SW#1 NC	PTO fender switch number 1 normal closed
--	PTO FENDER SW#2 NO	PTO fender switch number 2 normal open
--	REAR PTO FENDER LED	Rear PTO fender LED
--	HITCH FENDER SW COM	Hitch fender switch
--	SNSR RTN	Sensor return
--	EXT PTO SW	External PTO switch
--	STEERING SNSR	Steering sensor
--	SWITCH/SENSOR RTN	Switch/sensor return
--	SNSR GND	Sensor ground
--	SENS/DRIVER RTN	Sensor/driver return
--	SNSR PWR	Sensor power

10.6.93 Code SA 03 SPN 3513 FMI 04

The module has detected that the voltage of the 10 volt sensor supply circuit is below normal.

The transmission module produces a 10-volt output power that is utilized by the hitch elevation switches on the rear fenders and the steering sensor in the cab. The most likely cause for this error is a short to ground.

Diagnosis and solution

1. Check the 10-volt power circuit for a short-circuit.

a) Turn the key start switch to the off position.

b) Turn the battery disconnect switch to the off position.

c) Disconnect the J1 harness connector from the transmission module.

d) Check the resistance from contact J1-69 to all other J1 connector contacts.

Result

- All resistance measurements are high (more than 100 ohms).

  See step 7 to check if the error persists and the module is at fault.
- One or more resistance measurement is at or near 0 ohms.

  Make note of which contact(s) indicated a short to J1-69.

  See step 2 to isolate the right fender.

2. Isolate the right fender harness and switch.

a) Disconnect the right fender harness from the chassis harness (located just below the rear of the cab).

b) Re-check the resistance measurements from contact J1-69 to the remaining J1 contact(s) that previously indicated short circuit in step 1.

Result

- All resistance measurements are high (more than 100 ohms).

  The short circuit exists in the right fender harness or switch.

  See step 4 to isolate the switch from the fender harness.
- One or more resistance measurements remain at or near 0 ohms.

  The right fender harness is not likely the cause.

  Leave the right fender harness disconnected.

  See step 3 to isolate the left fender.

3. Isolate the left fender harness and switch.

a) Disconnect the left fender harness from the chassis harness (located just below the rear of the cab).

b) Re-check the resistance measurements from contact J1-69 to the remaining J1 contact(s) that previously indicated short circuit in step 1.

Result

- All resistance measurements are high (more than 100 ohms).

  The short circuit exists in the left fender harness or switch.

  See step 4 to isolate the switch from the fender harness.
- One or more resistance measurements remain at or near 0 ohms.

  The left fender harness is not likely the cause.

  See step 5 to isolate the cab harness.

4. Check the fender harness for short circuit.

a) Examine the right or left fender harness, depending on which side indicated the short circuit in steps 2 or 3.

b) Disconnect the 3-point hitch elevation switch from the fender harness.

c) Check the resistance between contact 5 and all other harness connector contacts.

Result

- All resistance measurements are high (more than 100 ohms).

  The short circuit exists in the hitch elevation switch.

  Replace the hitch elevation switch.

  See step 7 to validate the repair.
- One or more resistance measurements is at or near 0 ohms.

  The fender harness is faulty.

  Repair or replace the fender harness.

  See step 7 to validate the repair.

5. Isolate the cab harness.

a) Make sure the two fender harnesses are still disconnected from the previous steps.

b) Disconnect the cab harness from the chassis harness (located just above the transmission module).

c) Re-check the resistance measurements from contact J1-69 to the remaining J1 contact(s) that previously indicated short circuit in step 1.

Result

- All resistance measurements are high (more than 100 ohms).

  The short circuit exists in the cab harness or sensor.

  see step 6 to isolate the sensor from the harness.
- One or more resistance measurements is at or near 0 ohms.

  The chassis harness is faulty.

  Repair or replace the chassis harness.

  See step 7 to validate the repair.

6. Check the cab harness for short circuit.

a) Disconnect the steering sensor from the cab harness.

b) Check the resistance between contact C18-32 of the cab harness and all other C18 harness connector contacts.

Result

- All resistance measurements are high (more than 100 ohms).

  The short circuit exists in the steering sensor.

  Replace the steering sensor.

  See step 7 to validate the repair.
- One or more resistance measurements is at or near 0 ohms.

  The cab harness is faulty.

  Repair or replace the cab harness.

  See step 7 to validate the repair.

7. Check if the diagnostic code remains.

a) Connect all the connectors, sensor, and switches.

b) Turn the battery disconnect switch to the on position.

c) Turn the key start switch to the on position.

d) Operate the machine at low idle.

e) Check if the diagnostic code remains.

Result

- SPN 3513 FMI 04 is not active.

  Stop.
- SPN 3513 FMI 04 is active.

  Failure of the transmission module is possible but not common. Exit the procedure and do the procedure again. If the diagnostic code remains active, replace the module.

  Stop.

10.6.93.1 10 volt sensor supply electrical schematic

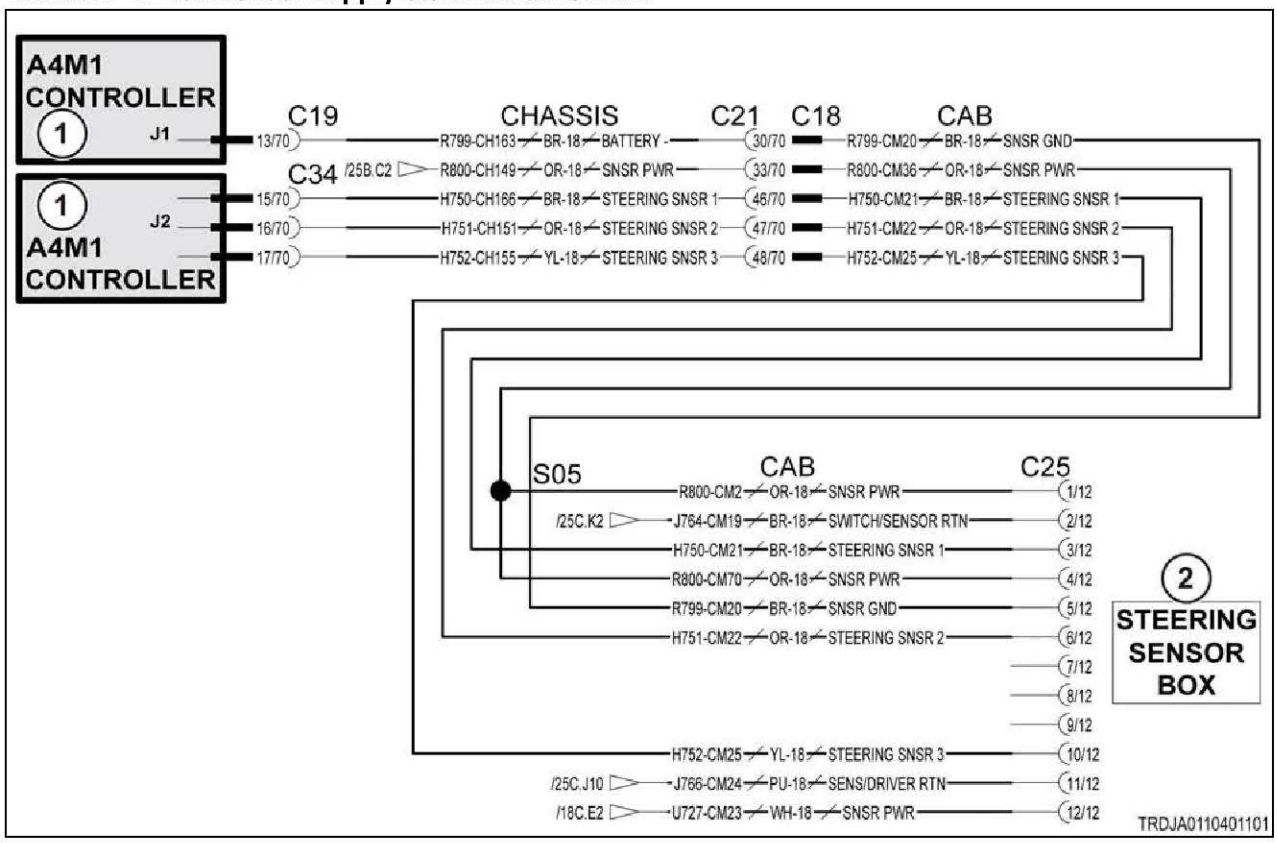

Fig. 247

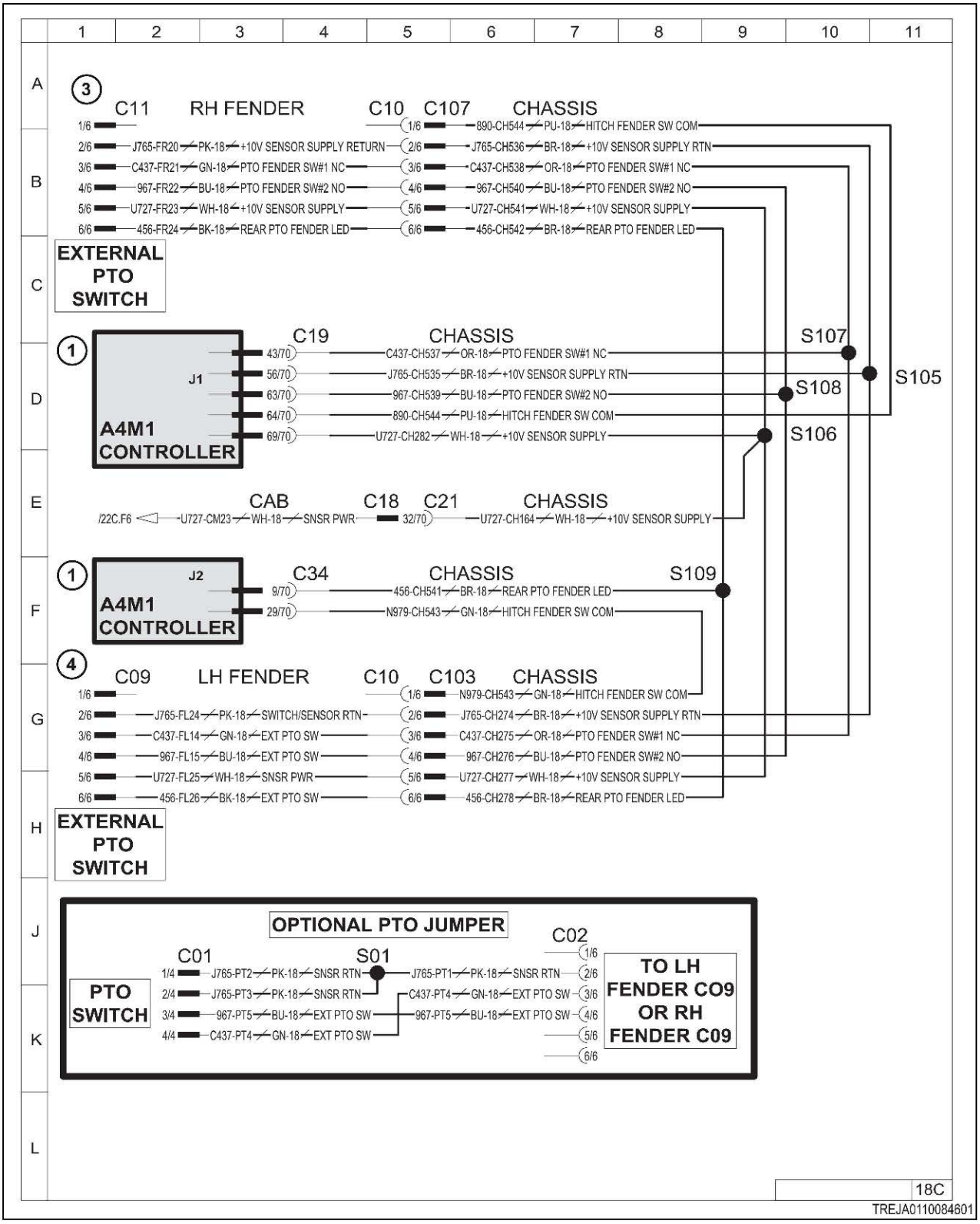

Fig. 248

Schematic legend		
Item	**Schematic term**	**Description**
1	A4M1 CONT	Transmission module
2	STEERING SENSOR BOX	Steering sensor box
3	RH FENDER	Right-hand fender harness

Schematic legend		
Item	Schematic term	Description
4	LH FENDER	Left-hand fender harness
--	EXTERNAL PTO SWITCH	External PTO switch
--	10V SENSOR SUPPLY	10 volt sensor supply
--	10V SENSOR SUPPLY RTN	10 volt sensor supply return
--	PTO FENDER SW#1 NC	PTO fender switch number 1 normal closed
--	PTO FENDER SW#2 NO	PTO fender switch number 2 normal open
--	REAR PTO FENDER LED	Rear PTO fender LED
--	HITCH FENDER SW COM	Hitch fender switch
--	SNSR RTN	Sensor return
--	EXT PTO SW	External PTO switch
--	STEERING SNSR	Steering sensor
--	SWITCH/SENSOR RTN	Switch/sensor return
--	SNSR GND	Sensor ground
--	SENS/DRIVER RTN	Sensor/driver return
--	SNSR PWR	Sensor power

10.6.94 Code SA 03 SPN 3825 FMI 12

The module has detected that the signal frequency of the output speed sensor 2 is not within normal range.

The output shaft speed sensor 2 is not in agreement with sensor 1. The most likely cause is a fouled sensor tip or a faulty sensor.

The transmission output shaft speed and direction are determined by a pair of proximity sensors at the front of the transmission housing. The speed of the shaft is determined by the frequency of the pulses from the first sensor, and the direction of rotation is determined by the lead-time or lag-time of the second sensor detecting a separate tooth. The sensors are positioned approximately 1/4-tooth out of phase with each other, with respect to the reductor ring teeth. This results in the second sensor detecting a tooth slightly before, or slightly after the first sensor, depending on the direction of rotation of the shaft.

Diagnosis and solution

1. Inspect the output shaft speed sensors.

a) Turn the key start switch to the off position.

b) Turn the battery disconnect switch to the off position.

c) Make sure sensor 1 and 2 are not reversed.

Result

While not likely because the harness lengths are different, reversing the harness connections for sensor 1 and 2 can result in this error.

- The sensor connectors appear to be reversed.

  Swap the sensor connectors.

  See step 4 to validate the repair.
- The sensor connectors do not appear to be reversed.

  Disconnect the sensors and continue the examination.

d) Remove both output shaft speed sensors from the transmission housing.

e) Inspect the sensor for foreign material and clean.
f) Check resistance of the sensor(s) between contact 1 and contact 2.

Result

- The resistance reading is between 600 and 1800 ohms.

  The sensor itself is not likely the fault.

  See step 2 to check the sensor's position during reinstallation.
- The resistance reading is not between 600 and 1800 ohms.

  Replace the shaft speed sensor.

  See step 4 to validate the repair.

2. Reinstall the sensors.
a) Inspect the O-ring and replace if necessary.
b) Clean the surface of the transmission housing where the sensor seats.
c) Make sure the sensor is fully seated into the transmission housing.
d) Secure the sensor and make sure the retaining bracket is firmly seated against the sensor.
e) Continue to step 3.

3. Check the harness for continuity.
a) Connect the harness connector to the speed sensors.
b) Disconnect the transmission module J1 connector.
c) Check the resistance between contacts J1-17 to J1-18 on the transmission module harness connector.

Result

- The resistance is between 600 and 1800 ohms.

  The harness is not open or shorted.

  See step 4 to check if the error persists.
- The resistance is at or near 0 ohms.

  The harness is shorted.

  Repair or replace the harness.

  See step 4 to validate the repair.
- The resistance is above 1800 ohms, but not open circuit.

  Check the harness for corroded connections.

  See step 4 to validate the repair.
- The resistance is indicating open circuit.

  Repair or replace the harness.

  See step 4 to validate the repair.

4. Check if the diagnostic code remains.
a) Check and clean the harness connector contacts.
b) Connect all the connectors.
c) Turn the battery disconnect switch to the on position.
d) Turn the key start switch to the on position.
e) Operate the machine at low idle.
f) Check if the diagnostic code remains.

Result

- SPN 3825 FMI 12 is not active.

  Stop.
- SPN 3825 FMI 12 is active.

  Replace the sensor and repeat this step.

  Failure of the transmission module is possible but not common. Exit the procedure and do the procedure again. If the diagnostic code remains active, replace the module.

  Stop.

10.6.94.1 Transmission input shaft speed sensor electrical schematic

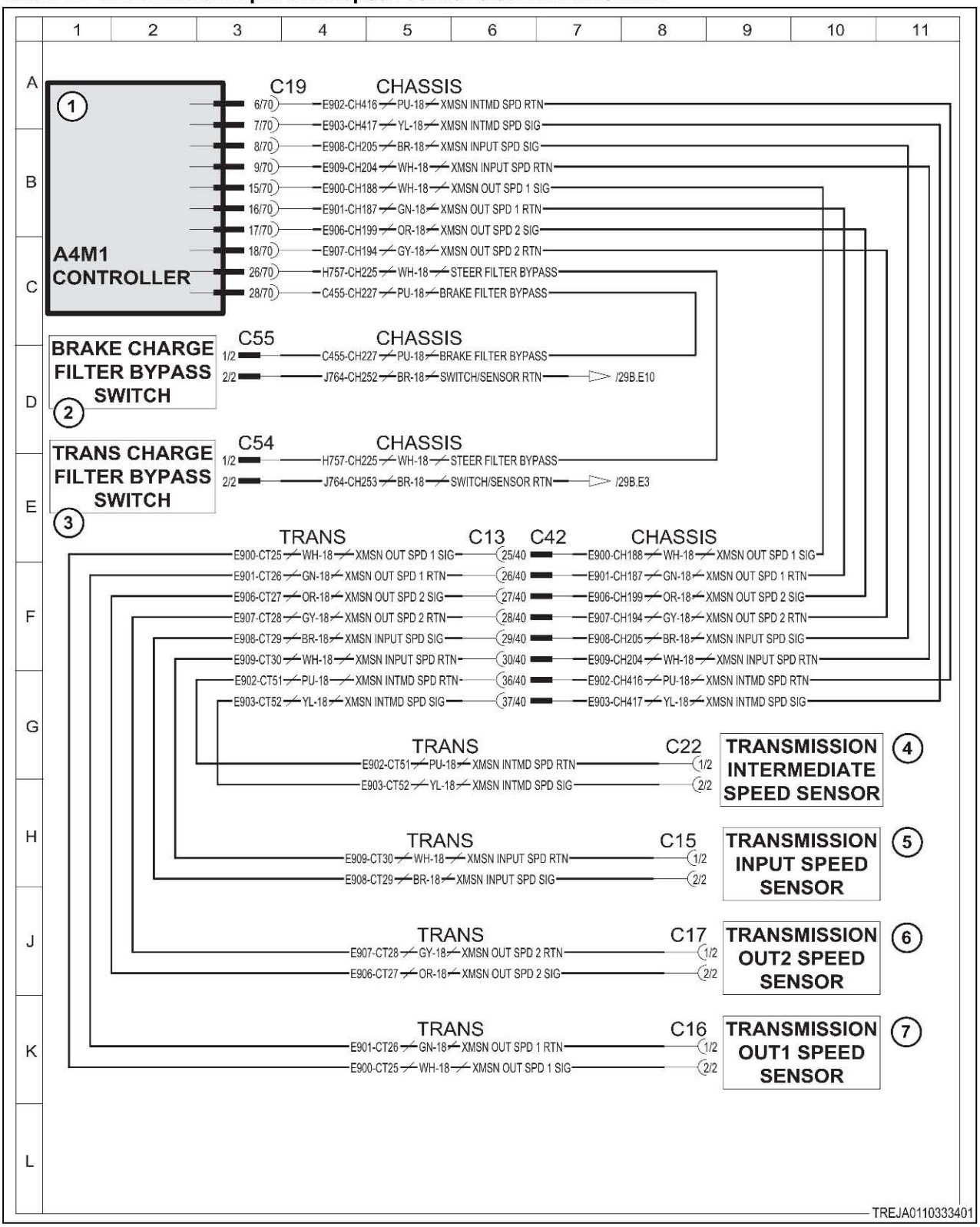

Fig. 249

Schematic legend		
Item	Schematic term	Description
1	A4M1 CONT	Transmission module
2	BRAKE CHARGE FILTER BYPASS SWITCH	Brake charge filter bypass switch
3	TRANS CHARGE FILTER BYPASS SWITCH	Transmission charge filter bypass switch
4	TRANSMISSION INTERMEDIATE SPEED SENSOR	Transmission intermediate speed sensor
5	TRANSMISSION INPUT SPEED SENSOR	Transmission input speed sensor
6	TRANSMISSION OUT 2 SPEED SENSOR	Transmission output speed sensor 2
7	TRANSMISSION OUT 1 SPEED SENSOR	Transmission output speed sensor 1
–	STEERING FILTER BYPASS	Steering filter bypass
–	BRAKE FILTER BYPASS	Brake filter bypass
–	SWITCH/SENSOR RTN	Switch/sensor return
–	XMSN OUT SPD SIG	Transmission output speed signal
–	XMSN OUT SPD RTN	Transmission output speed return
–	XMSN INPUT SPD RTN	Transmission input speed return
–	XMSN INPUT SPD SIG	Transmission input speed signal

10.6.95 Code SA 03 SPN 521471 FMI 00

The steering wheel position sensor 1 signal is above normal range .

The transmission module is detecting elevated voltage from the steering wheel position sensor. The sensor produces a variable voltage depending on the wheel position from left to right. Full left should be approximately 0.5 volts, center should be approximately 2.5 volts, and full right should be approximately 4.5 volts. If the voltage is elevated, the most likely cause is an open circuit in the signal wire. The 3 steering sensors are redundant, but have slightly different circuits. This can aid in isolating the cause.

Diagnosis and solution

1. Calibrate the steering position sensors.
   a) Turn the key start switch to the on position.
   b) Follow the screen prompts and perform the sensor calibration.

   Result

   - The calibration failed and SA 03 SPN 521471 FMI 00 is being reported.

     See step 2 to diagnose the fault.
   - The calibration was successful and SA 03 SPN 521471 FMI 00 is cleared.

     Stop.

2. Determine when the error condition occurs.
   a) Turn the key start switch to the on position.
   b) Turn the steering wheel through its range of motion.
   c) Observe if the error code is reported for various steering wheel positions.

Result

- The error code is reported when the steering wheel is turned, but not when in the center position.

  The most likely cause is a faulty steering sensor box.

  Replace the steering sensor box.

  See step 8 to calibrate the sensor and validate the repair.
- The error code is reported at any position.

  See step 3 to isolate the cause.

3. Observe whether any additional error codes are reported.

Result

- Only SA 03 SPN 521471 FMI 00 is being reported.

  Sensor power and sensor return are not likely the cause.

  The signal wire may be open, or shorted to positive.

  Focus further examination on the steering sensor 1 signal circuit from C25-3 at the steering box to J2-15 at the transmission module.

  Note that the steering sensor box may still be at fault.

  See step 4 to check for an open circuit in the signal wire.
- The inching pedal switch is also reporting an error. (SA 03 SPN 598 FMI xx)

  Possible open ground wire.

  Focus further examination on the sensor ground circuit from C25-2 at the steering box to J1-21 at the transmission module.

  See step 4 to check for an open ground.

4. Check for open circuit on signal or ground.

a) Turn the key start switch to the off position.
b) Turn the battery disconnect switch to the off position.
c) Disconnect the cab harness from the steering sensor box.
d) Install a shorting jumper between contacts C25-2 and C25-3 at the sensor connector.
e) Disconnect the J1 and J2 connectors from the transmission module.
f) Check the resistance between contacts J1-21 and J2-15 at the transmission module.

Result

- The resistance measurement is high (not near 0 ohms).

  If only sensor 1 is reporting an error (from step 3), then the sensor signal is open.

  If the inching pedal is also reporting an error (from step 3), then the ground wire is open.

  Repair or replace the harness.

  See step 8 to calibrate the sensor and validate the repair.
- The resistance is at or near 0 ohms.

  Remove the shorting jumper.

  See step 5 to check for a short from signal to power.

5. Check for a short in the cab harness.

a) Make sure the shorting jumper from step 4 is removed.
b) Disconnect the cab harness from the chassis harness. (C18 from C32 located just above the transmission module.)
c) Check the resistance between C18-46 and all other C18 contacts.

Result

- All resistance measurements are high (not near 0 ohms).

  The cab harness is not the cause.

  Leave the harness disconnected.

  See step 6 to check the chassis harness for a short circuit.
- One or more resistance measurement was at or near 0 ohms.

  Repair or replace the cab harness.

  See step 8 to calibrate the sensor and validate the repair.

6. Check for a short circuit in the chassis harness.

a) Make sure the cab harness is still disconnected from the chassis harness from the previous step.
b) Disconnect the J1 and J2 connectors from the transmission module.
c) Check the resistance between J2-15 and all other J1 and J2 contacts.

Result

- All resistance measurements are high (not near 0 ohms).

  The chassis harness is not the cause.

  Reconnect all harnesses.

  See step 7 to check the function of the sensor.
- One or more resistance measurement was at or near 0 ohms.

  Repair or replace the chassis harness.

  See step 8 to calibrate the sensor and validate the repair.

7. Check the function of the sensor.

a) Reconnect all connectors.
b) Turn the key start switch to the on position.
c) Check the voltage from steering sensor 1 with the steering wheel in the center position.
   If accessible, measure the voltage between contacts 2 and 3 at the steering sensor box
   Otherwise, measure the voltage between contacts J1-21 and J2-15 at the transmission module.
d) Check the voltage from steering sensor 2 with the steering wheel in the center position.
   If accessible, measure the voltage between contacts 5 and 6 at the steering sensor box
   Otherwise, measure the voltage between contacts J1-13 and J2-16 at the transmission module.

Result

- The voltage for sensor 1 is significantly different from sensor 2.

  Sensor 1 is faulty.

  Replace the steering sensor box.

  See step 8 to calibrate the sensor and validate the repair.
- The voltage for sensor 1 is at or near the voltage for sensor 2.

  Recheck the voltages at full-right position.

  Continue.

e) Turn the steering wheel fully to the right, and re-check the voltages from above.

Result

- The voltage for sensor 1 is significantly different from sensor 2.

  Sensor 1 is faulty.

  Replace the steering sensor box.

  See step 8 to calibrate the sensor and validate the repair.
- The voltage for sensor 1 is above 5 volts.

  Replace the steering sensor box.

  See step 8 to calibrate the sensor and validate the repair.
- For both the previous and current measurements, the voltage for sensor 1 is at or near the voltage for sensor 2.

  The sensor is not at fault.

  See step 8 to calibrate the steering position sensors.

8. Check the sensor calibration.

a) Connect all the connectors.
b) Turn the battery disconnect switch to the on position.
c) Turn the key start switch to the on position.
d) Perform the sensor calibration.

Result

- The calibration was successful and SA 03 SPN 521471 FMI 00 is cleared.

  Stop.
- The calibration failed and only SA 03 SPN 521471 FMI 00 is being reported.

  The steering sensor box is likely at fault.

  Replace the steering sensor box.

  Repeat this adjustment step.

10.6.95.1 Steering wheel position sensors electrical schematic

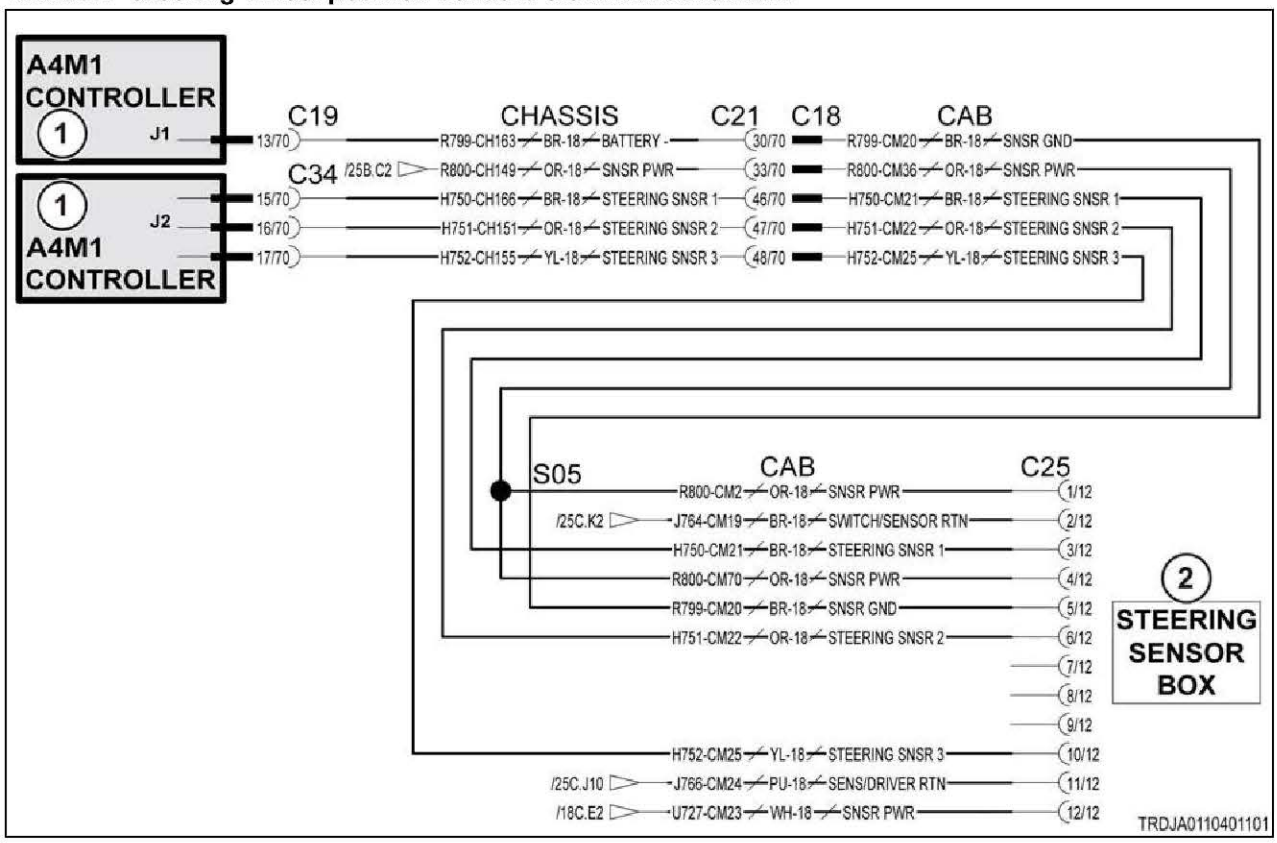

Fig. 250

Schematic legend		
Item	**Schematic term**	**Description**
1	A4M1 CONT	Transmission module
2	STEERING SENSOR BOX	Steering sensor box
--	STEERING SNSR	Steering sensor
--	SWITCH/SENSOR RTN	Switch/sensor return
--	SNSR GND	Sensor ground
--	SENS/DRIVER RTN	Sensor/driver return
--	SNSR PWR	Sensor power

10.6.96 Code SA 03 SPN 521471 FMI 01

The steering wheel position sensor 1 below normal operational range .

The transmission module is detecting low or no voltage from the steering wheel position sensor. The sensor produces a variable voltage depending on the wheel position from left to right. Full left should be approximately 0.5 volts, center should be approximately 2.5 volts, and full right should be approximately 4.5 volts. If the voltage is too low, the most likely cause is an open circuit on power or a short circuit on the signal wire. The 3 steering sensors are redundant, but have slightly different circuits. This can aid in isolating the cause.

Diagnosis and solution

1. Calibrate the steering position sensors.
   a) Turn the key start switch to the on position.

b) Follow the screen prompts and perform the sensor calibration.

Result

- The calibration failed and SA 03 SPN 521471 FMI 01 is being reported.

  See step 2 to diagnose the fault.
- The calibration was successful and SA 03 SPN 521471 FMI 01 is cleared.

  Stop.

2. Determine when the error condition occurs.

a) Turn the key start switch to the on position.

b) Turn the steering wheel through its range of motion.

c) Observe if the error code is reported for various steering wheel positions.

Result

- The error code is reported when the steering wheel is turned.

  The most likely cause is a faulty steering sensor box.

  Replace the steering sensor box.

  See step 7 to calibrate the steering sensor.
- The error code is reported at any position.

  See step 3 to isolate the cause.

3. Observe whether any additional error codes are reported.

Result

- Only SA 03 SPN 521471 FMI 01 is being reported.

  Sensor power and ground return are not likely the cause.

  Focus further examination on the steering sensor 1 signal circuit from C25-3 at the steering box to J2-15 at the transmission module.

  Note that the steering sensor box may still be at fault.

  See step 4 to check for a short circuit in the signal wire.
- Steering sensor 2 is also reporting an error. (SA 03 SPN 521471 FMI xx)

  Focus further examination on the 8-volt sensor supply circuit from C25-1 and C25-4 at the steering box to J1-44 at the transmission module.

  See step 5 to check for an open circuit in the sensor power wire.
- The inching pedal switch is also reporting an error. (SA 03 SPN 598 FMI xx)

  Focus further examination on the 5-volt ground return circuit from C25-2 at the steering box to J1-21 at the transmission module.

  See step 5 to check for an open circuit in the ground wire.

4. Check for short circuit signal to ground.

a) Turn the key start switch to the off position.

b) Disconnect the harness from the steering sensor box.

c) Disconnect the chassis harness from the cab harness. (Located just above the transmission module.)

d) Disconnect the J1 and J2 connectors at the transmission module.

e) Check resistance from contact J2-15 to all other J1 and J2 connector contacts.

Result

- One or more resistance measurement is at or near 0 ohms.

  Repair or replace the chassis harness.

  See step 7 to calibrate the sensor and validate the repair.
- The resistance is high (not near 0 ohms).

  Continue.

f) Check the resistance from contact C32-46 to all other C32 contacts on the chassis harness.

Result

- One or more resistance measurement is at or near 0 ohms.

  Repair or replace the chassis harness.

  See step 7 to calibrate the sensor and validate the repair.
- The resistance is high (not near 0 ohms).

  The chassis harness is not the cause.

  Continue.

g) Check the resistance from contact C18-46 to all other C18 contacts on the cab harness.

Result

- One or more resistance measurement is at or near 0 ohms.

  Repair or replace the cab harness.

  See step 7 to calibrate the sensor and validate the repair.
- The resistance is high (not near 0 ohms).

  See step 6 to check the sensor function.

5. Check for an open circuit on power or ground.

a) Turn the key start switch to the off position.
b) Disconnect the harness from the steering sensor box.
c) Install a shorting jumper onto the sensor connector between contacts C25-1 and C25-2.
d) Disconnect the J1 connector at the transmission module.
e) Measure the resistance at the transmission module connector between contacts J1-21 and J1-44.

Result

- The resistance measurement is high (not near 0 ohms).

  Power or ground is open.

  Repair or replace the harness.

  See step 7 to calibrate the sensor and validate the repair.
- The resistance measurement is at or near 0 ohms.

  See step 6 to check the function of the sensor.

6. Check the function of the sensor.

a) Reconnect all connectors.
b) Turn the key start switch to the on position.
c) Check the voltage from steering sensor 1 with the steering wheel in the center position.
   If accessible, measure the voltage between contacts 2 and 3 at the steering sensor box
   Otherwise, measure the voltage between contacts J1-21 and J2-15 at the transmission module.
d) Check the voltage from steering sensor 2 with the steering wheel in the center position.
   If accessible, measure the voltage between contacts 5 and 6 at the steering sensor box

Otherwise, measure the voltage between contacts J1-13 and J2-16 at the transmission module.

Result

- The voltage for sensor 1 is significantly different from sensor 2.

  Sensor 1 is faulty.

  Replace the steering sensor box.

  See step 7 to calibrate the sensor and validate the repair.
- The voltage for sensor 1 is at or near the voltage for sensor 2.

  Recheck the voltages at full-left position.

  Continue.

e) Turn the steering wheel fully to the left, and re-check the voltages from above.

Result

- The voltage for sensor 1 is significantly different from sensor 2.

  Sensor 1 is faulty.

  Replace the steering sensor box.

  See step 7 to calibrate the sensor and validate the repair.
- The voltage for sensor 1 is below 0.5 volts.

  Replace the steering sensor box.

  See step 7 to calibrate the sensor and validate the repair.
- For both the previous and current measurements, the voltage for sensor 1 is at or near the voltage for sensor 2.

  The sensor is not at fault.

  See step 7 to calibrate the steering position sensors.

7. Check the sensor calibration.

a) Connect all the connectors.
b) Turn the battery disconnect switch to the on position.
c) Turn the key start switch to the on position.
d) Perform the sensor calibration.

Result

- The calibration was successful and SA 03 SPN 521471 FMI 01 is cleared.

  Stop.
- The calibration failed and only SA 03 SPN 521471 FMI 01 is being reported.

  The steering sensor box is likely at fault.

  Replace the steering sensor box.

  Repeat this adjustment step.

10.6.96.1 Steering wheel position sensors electrical schematic

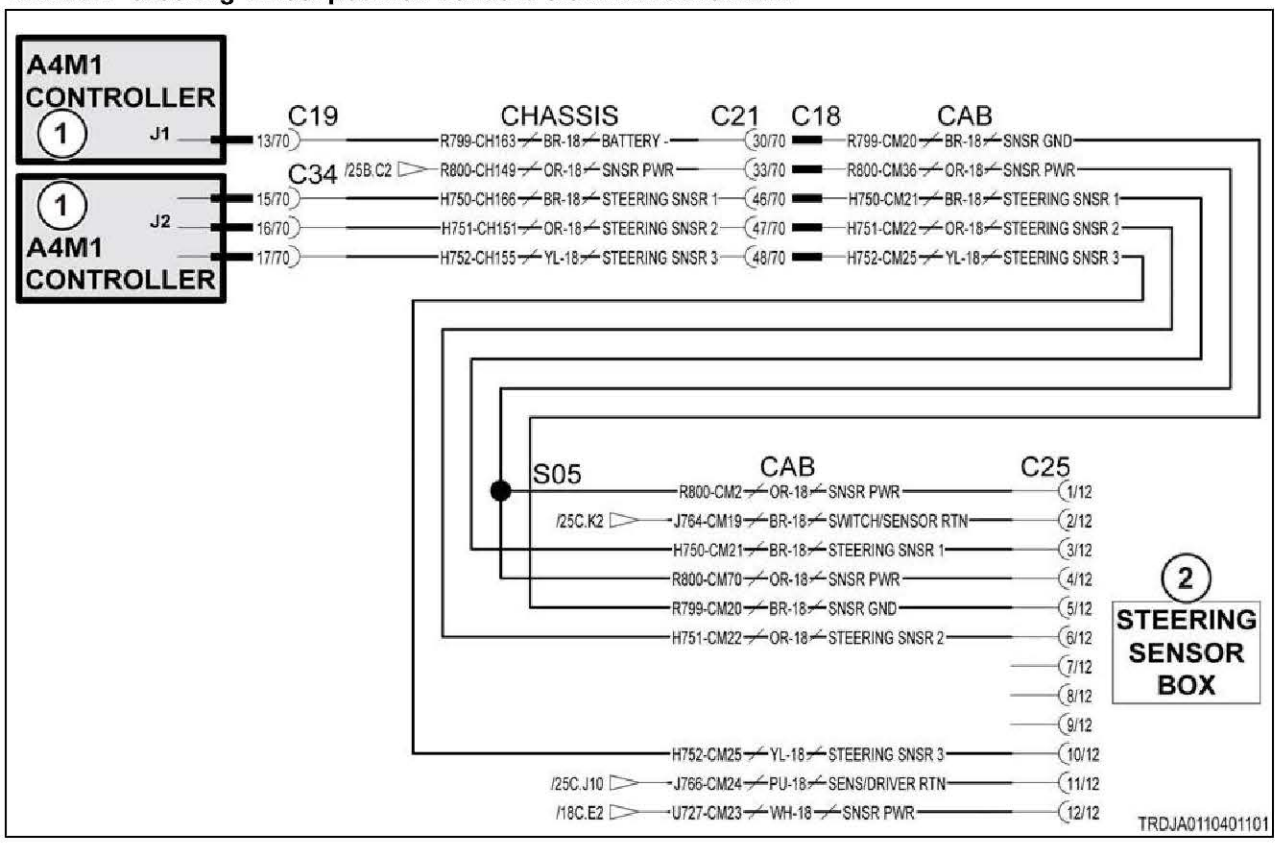

Fig. 251

Schematic legend		
Item	**Schematic term**	**Description**
1	A4M1 CONT	Transmission module
2	STEERING SENSOR BOX	Steering sensor box
--	STEERING SNSR	Steering sensor
--	SWITCH/SENSOR RTN	Switch/sensor return
--	SNSR GND	Sensor ground
--	SENS/DRIVER RTN	Sensor/driver return
--	SNSR PWR	Sensor power

10.6.97 Code SA 03 SPN 521471 FMI 02

The steering wheel position sensor 1 signal out of expected range.

Diagnosis and solution

1. Check the power at the steering wheel position sensor.
- a) Turn the key start switch to the off position.
- b) Turn the battery disconnect switch to the off position.
- c) Remove the key from the battery disconnect switch.
- d) Disconnect the steering sensor module harness connector from the sensor .
- e) Turn the battery disconnect switch to the on position.
- f) Turn the key start switch to the on position.
- g) Check the voltage at contact 1 on steering sensor module connector.

Result

Expected result - the voltage is 10 volts.

Results:

- Yes - the voltage is 10 volts.

  see step 2, page 10-484
- No - the voltage in not 10 volts.

  Repair or replace the harness.

  see step 4, page 10-484

2. Check the ground at the steering wheel position sensor.

a) Turn the key start switch to the off position.
b) Turn the battery disconnect switch to the off position.
c) Remove the key from the battery disconnect switch.
d) Disconnect the steering sensor module harness connector from the sensor .
e) Check the resistance at contact 5 on steering sensor module connector to the chassis frame ground.

Result

Expected result - the resistance is less than 5 ohms.

Results:

- Yes - the resistance is less than 5 ohms.

  see step 3, page 10-484
- No - the resistance is not less than 5 ohms.

  Repair or replace the harness.

  see step 4, page 10-484

3. Check the steering wheel position sensor return circuit for short circuit.

a) Turn the key start switch to the off position.
b) Turn the battery disconnect switch to the off position.
c) Remove the key from the battery disconnect switch.
d) Disconnect the harness connectors from the sensor and the fuse block .
e) Check resistance between contact 2 on the steering sensor module connector and contact 22 on the transmission module connector.

Result

Expected result - the resistance is more than 5000 ohms.

Results:

- Yes - the resistance is more than 5000 ohms.

  see step 4, page 10-484
- No - the resistance is not more than 5000 ohms.

  Repair or replace the harness.

  see step 4, page 10-484

4. Check if the diagnostic code remains.

a) Check and clean the harness connector contacts.
b) Connect all the connectors.
c) Turn the battery disconnect switch to the on position.
d) Turn the key start switch to the on position.
e) Operate the machine at low idle.

f) Check if the diagnostic code remains.

Result

Expected result - the diagnostic code is not active.

Results:

- Yes - SPN 521471 FMI 02 is not active.

  Stop.
- No - SPN 521471 FMI 02 is active.

  Failure of the steering sensor module is possible but not common. Exit the procedure and do the procedure again. If the diagnostic code remains active, replace the module.

  Stop.

10.6.97.1 Steering wheel position sensors electrical schematic

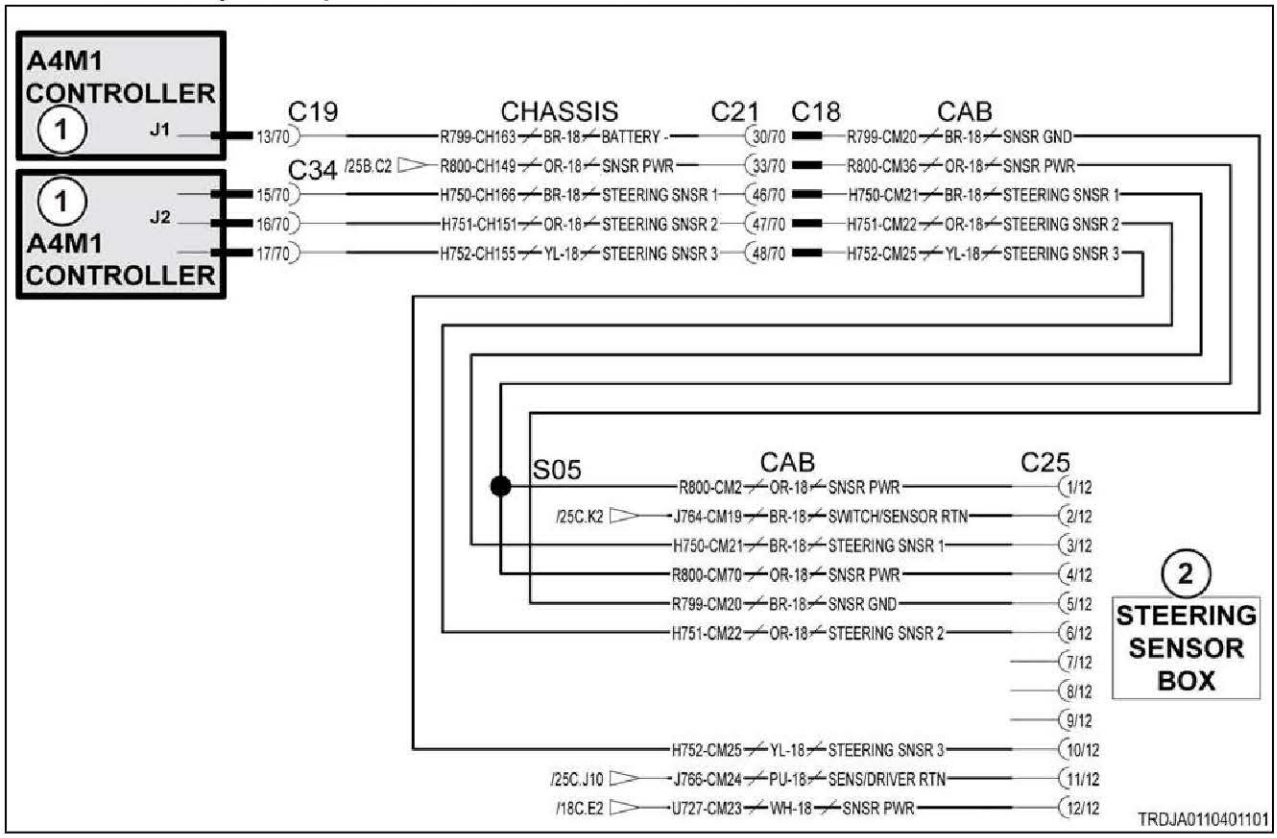

Fig. 252

Schematic legend		
Item	**Schematic term**	**Description**
1	A4M1 CONT	Transmission module
2	STEERING SENSOR BOX	Steering sensor box
--	STEERING SNSR	Steering sensor
--	SWITCH/SENSOR RTN	Switch/sensor return
--	SNSR GND	Sensor ground
--	SENS/DRIVER RTN	Sensor/driver return
--	SNSR PWR	Sensor power

10.6.98 Code SA 03 SPN 521471 FMI 08

The steering wheel position sensor 1 signal is not within expected range.

The transmission module detected abnormal or erratic voltage changes from the steering wheel position sensor. The sensor produces a variable voltage depending on the wheel position from left to right. Full left should be approximately 0.5 volts, center should be approximately 2.5 volts, and full right should be approximately 4.5 volts. If the voltage is erratic, the most likely cause is a loose connection or a faulty sensor. The 3 steering sensors are redundant, but have slightly different circuits. This can aid in isolating the cause.

Diagnosis and solution

1. Determine when the error condition occurs.

a) Turn the key start switch to the on position, but do not start the machine.

b) Turn the steering wheel through its range of motion.

c) Observe if the error code is reported for various steering wheel positions while the machine is not vibrating from the engine running.

Result

- The error code is reported when the engine is not running.

  The most likely cause is a faulty steering sensor box.

  Replace the steering sensor box.

  See step 4 to calibrate the steering sensor and validate the repair.
- The error code is not reported when the engine is not running.

  Continue.

d) Start the machine.

e) As necessary, operate the machine at low idle, high idle, and travelling to produce machine vibration.

f) Observe if the error code is reported while the machine is vibrating from operation.

Result

- The error is reported when the machine is vibrating.

  The likely cause is a loose connection.

  See step 2 to isolate possible loose connection locations.

2. Observe whether any additional error codes are reported.

Result

- Only SA 03 SPN 521471 FMI 08 is being reported.

  Sensor power and sensor return are not likely the cause.

  Focus further examination on the sensor signal circuit from C25-3 at the steering box to J2-15 at the transmission module.

  Note that the steering sensor box may still be at fault.

  See step 3 to inspect harness and connector connections.
- Steering Sensor 2 is also reporting an error (SA 03 SPN 521472 FMI 08).

  Focus further examination on sensor power from C25-2 at the steering sensor to J1-21 at the transmission module.

  See step 3 to inspect harness and connector connections.

- An inching pedal switch error is also reported. (SA 03 SPN 598 FMI xx)

  Focus further examination on the ground circuit from C25-2 at the steering box to J1-21 at the transmission module.

  See step 3 to inspect harness and connector connections.

3. Inspect all harness and sensor connections.

a) Turn the key start switch to the off position.
b) Turn the battery disconnect switch to the off position.
c) Inspect and clean all connectors and connector contacts:

- Look for bent or worn pins.
- Look for deformed or oversized sockets.
- Look for corrosion on the pins and sockets. Corrosion is a sign of a loose connection.
- Look for signs of overheating. Overheating is a sign of a poor connection, and can further loosen the pin or socket mount. The whole connector body should be replaced.

d) Make sure to inspect the circuits identified in step 2 as they pass through the following connector locations:

- Connector C25 at the steering sensor box.
- Cab harness to chassis harness connector (C18 & C32).
- Transmission module J1 and J2 connectors.

e) Repair or replace any connector or harness found faulty.
f) See step 4 to calibrate the steering sensor.

4. Check the sensor calibration.

a) Connect all the connectors.
b) Turn the battery disconnect switch to the on position.
c) Turn the key start switch to the on position.
d) Perform the sensor calibration.

Result

- The calibration was successful and SA 03 SPN 521471 FMI 08 is cleared.

  Stop.
- The calibration failed and only SA 03 SPN 521471 FMI 08 is being reported.

  The steering sensor box is likely at fault.

  Replace the steering sensor box.

  Repeat this adjustment step.

10.6.98.1 Steering wheel position sensors electrical schematic

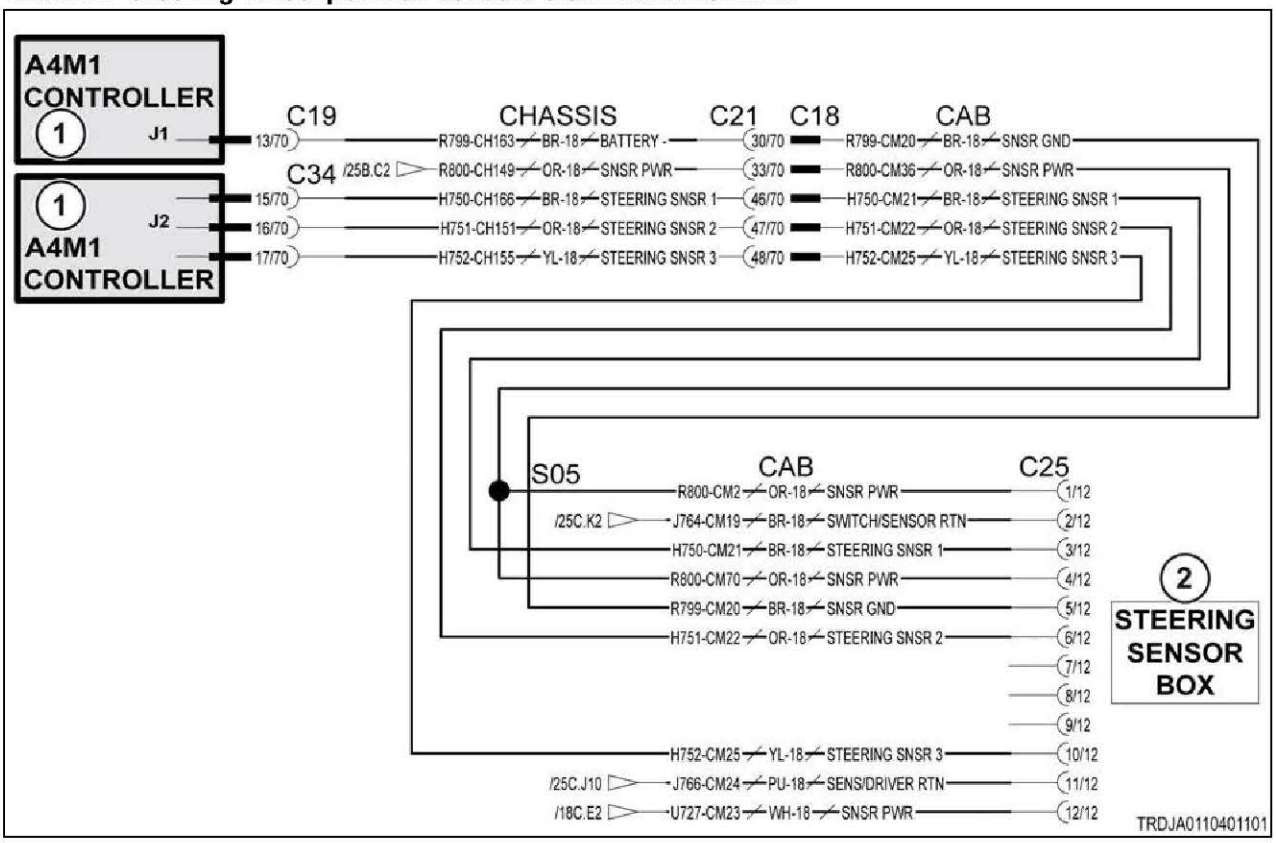

Fig. 253

Schematic legend		
Item	**Schematic term**	**Description**
1	A4M1 CONT	Transmission module
2	STEERING SENSOR BOX	Steering sensor box
--	STEERING SNSR	Steering sensor
--	SWITCH/SENSOR RTN	Switch/sensor return
--	SNSR GND	Sensor ground
--	SENS/DRIVER RTN	Sensor/driver return
--	SNSR PWR	Sensor power

10.6.99 Code SA 03 SPN 521471 FMI 12

The steering wheel position sensor 1 component malfunction.

Steering wheel sensor 1 is reporting a position which is in disagreement with sensors 2 and 3. The sensor produces a variable voltage depending on the wheel position from left to right. Full left should be approximately 0.5 volts, center should be approximately 2.5 volts, and full right should be approximately 4.5 volts. If the voltage is not consistent with the remaining sensors, the most likely cause is a faulty sensor. The 3 steering sensors are redundant, but have slightly different circuits. This can aid in isolating the cause.

Diagnosis and solution

1. Calibrate the steering position sensors.
   a) Turn the key start switch to the on position.
   b) Follow the screen prompts and perform the sensor calibration.

Result

- The calibration failed and SA 03 SPN 521471 FMI 12 is being reported.

  See step 2 to diagnose the fault.
- The calibration was successful and SA 03 SPN 521471 FMI 12 is cleared.

  Stop.

2. Check the function of the sensor.

a) Turn the key start switch to the on position.

b) Check the voltage from steering sensor 1 with the steering wheel in the center position.

If accessible, measure the voltage between contacts 2 and 3 at the steering sensor box

Otherwise, measure the voltage between contacts J1-21 and J2-15 at the transmission module.

c) Check the voltage from steering sensor 2 with the steering wheel in the center position.

If accessible, measure the voltage between contacts 5 and 6 at the steering sensor box

Otherwise, measure the voltage between contacts J1-13 and J2-16 at the transmission module.

Result

- The voltage for sensor 1 is significantly different from sensor 2.

  Sensor 1 is faulty.

  Replace the steering sensor box.

  See step 3 to calibrate the sensor and validate the repair.
- The voltage for sensor 1 is at or near the voltage for sensor 2.

  Recheck the voltages at full-right position.

  Continue.

d) Turn the steering wheel fully to the right, and re-check the voltages from above.

Result

- The voltage for sensor 1 is significantly different from sensor 2.

  Sensor 1 is faulty.

  Replace the steering sensor box.

  See step 3 to calibrate the sensor and validate the repair.
- The voltage for sensor 1 is above 4.5 volts.

  Replace the steering sensor box.

  See step 3 to calibrate the sensor and validate the repair.
- The voltage for sensor 1 is at or near the voltage for sensor 2.

  Recheck the voltages at full-right position.

  Continue.

e) Turn the steering wheel fully to the left, and re-check the voltages from above.

Result

- The voltage for sensor 1 is significantly different from sensor 2.

  Sensor 1 is faulty.

  Replace the steering sensor box.

  See step 3 to calibrate the sensor and validate the repair.

- The voltage for sensor 1 is below 0.5 volts.

  Replace the steering sensor box.

  See step 3 to calibrate the sensor and validate the repair.
- The voltage for sensor 1 is at or near the voltage for sensor 2.

  The sensor is not at fault.

  See step 3 to calibrate the steering position sensors.

3. Check the sensor calibration.

a) Connect all the connectors.
b) Turn the battery disconnect switch to the on position.
c) Turn the key start switch to the on position.
d) Perform the sensor calibration.

Result

- The calibration was successful and SA 03 SPN 521471 FMI 12 is cleared.

  Stop.
- The calibration failed and only SA 03 SPN 521471 FMI 12 is being reported.

  The steering sensor box is likely at fault.

  Replace the steering sensor box.

  Repeat this adjustment step.

10.6.99.1 Steering wheel position sensors electrical schematic

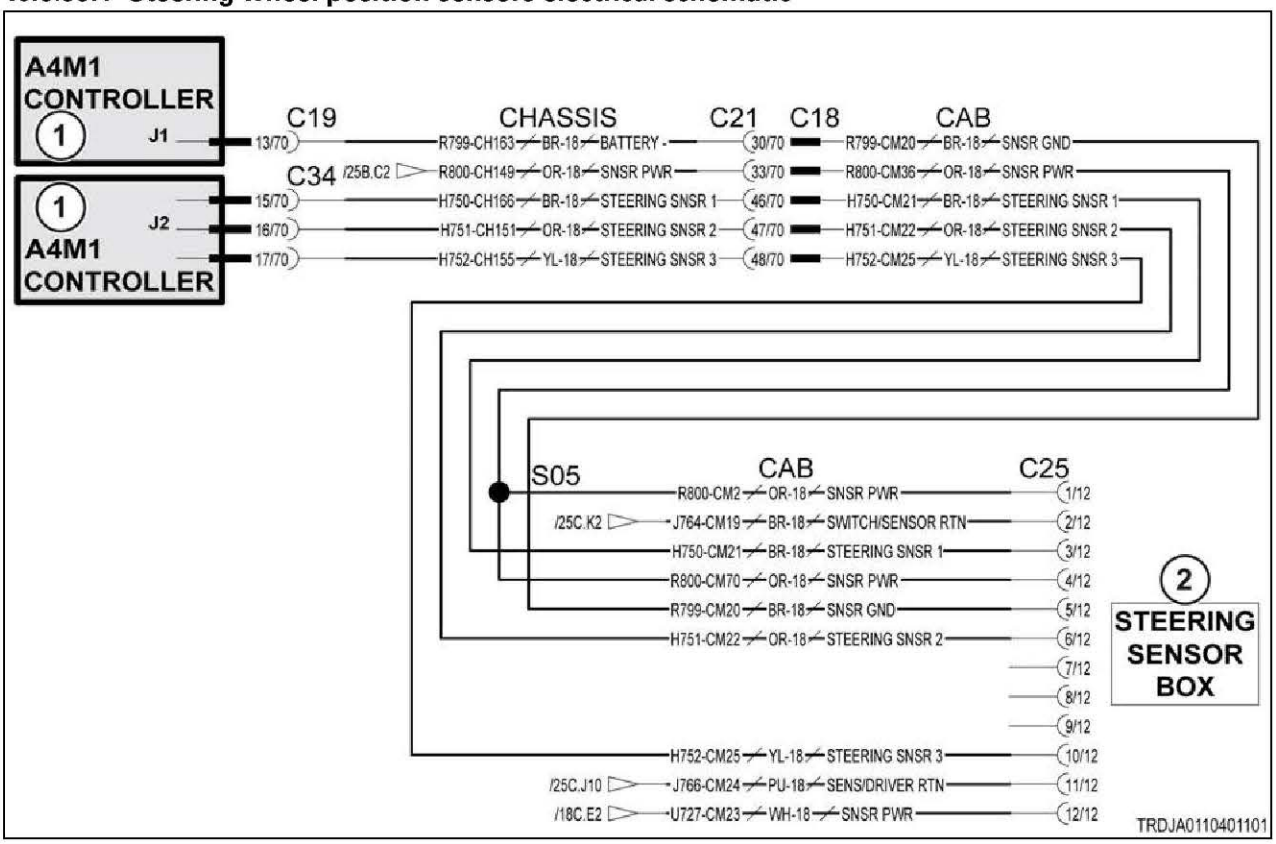

Fig. 254

Schematic legend		
Item	**Schematic term**	**Description**
1	A4M1 CONT	Transmission module
2	STEERING SENSOR BOX	Steering sensor box
--	STEERING SNSR	Steering sensor
--	SWITCH/SENSOR RTN	Switch/sensor return
--	SNSR GND	Sensor ground
--	SENS/DRIVER RTN	Sensor/driver return
--	SNSR PWR	Sensor power

10.6.100 Code SA 03 SPN 521471 FMI 13

The steering wheel position sensor 1 is out of calibration.

Steering wheel sensor 1 is reporting a position which is inconsistent with its calibrated range. The 3 steering sensors are redundant, but are calibrated together.

Diagnosis and solution

Calibrate the steering position sensors.

a) Turn the key start switch to the on position.
b) Follow the screen prompts and perform the sensor calibration.

Result

- The calibration failed and SA 03 SPN 521471 FMI 13 is being reported.

  Check for additional diagnostic codes and troubleshoot the sensor as described for that code.
- The calibration was successful and SA 03 SPN 521471 FMI 13 is cleared.

  Stop.

10.6.100.1 Steering wheel position sensors electrical schematic

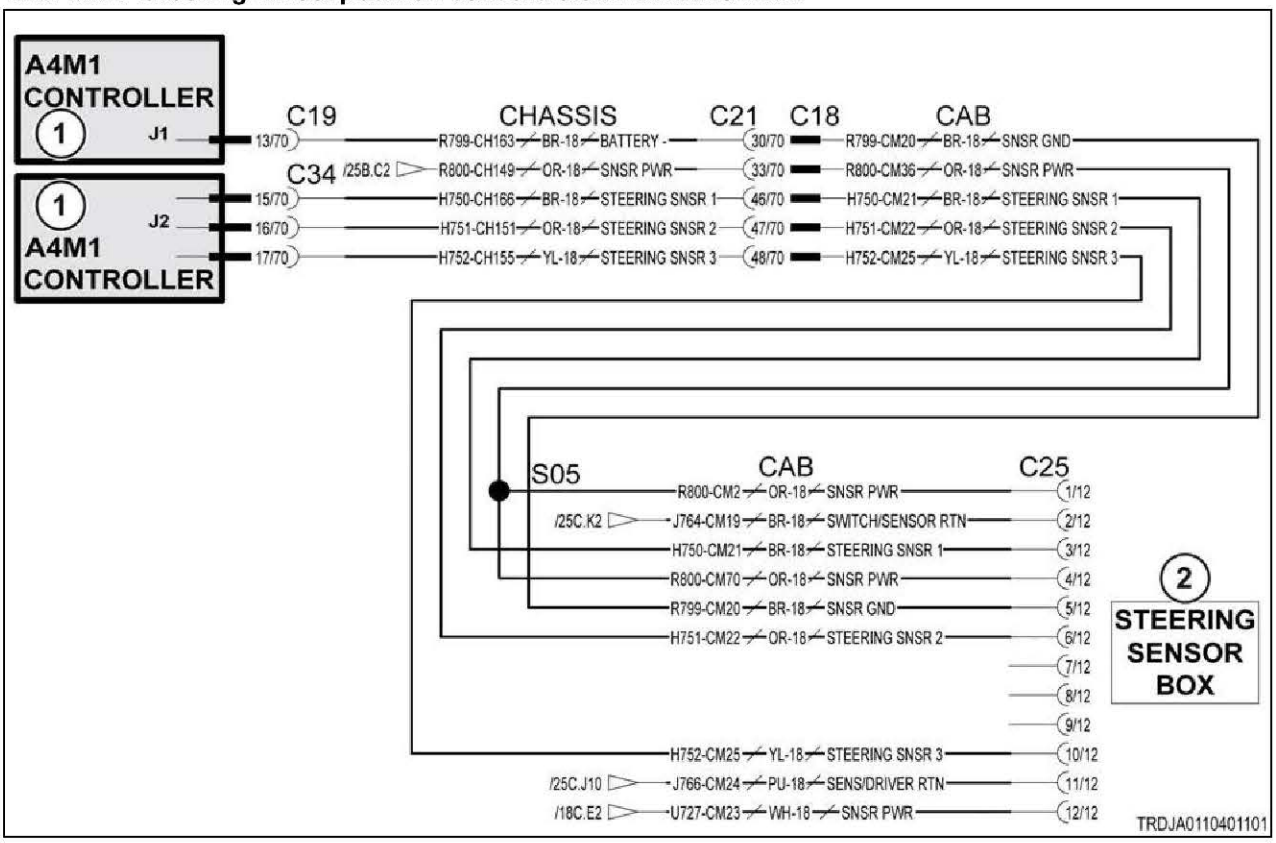

Fig. 255

Schematic legend		
Item	**Schematic term**	**Description**
1	A4M1 CONT	Transmission module
2	STEERING SENSOR BOX	Steering sensor box
--	STEERING SNSR	Steering sensor
--	SWITCH/SENSOR RTN	Switch/sensor return
--	SNSR GND	Sensor ground
--	SENS/DRIVER RTN	Sensor/driver return
--	SNSR PWR	Sensor power

10.6.101 Code SA 03 SPN 521472 FMI 00

The steering wheel position sensor 2 signal is above normal range .

The transmission module is detecting elevated voltage from the steering wheel position sensor. The sensor produces a variable voltage depending on the wheel position from left to right. Full left should be approximately 0.5 volts, center should be approximately 2.5 volts, and full right should be approximately 4.5 volts. If the voltage is elevated, the most likely cause is an open circuit in the signal wire. The 3 steering sensors are redundant, but have slightly different circuits. This can aid in isolating the cause.

Diagnosis and solution

1. Calibrate the steering position sensors.
   a) Turn the key start switch to the on position.
   b) Follow the screen prompts and perform the sensor calibration.

Result

- The calibration failed and SA 03 SPN 521472 FMI 00 is being reported.

  See step 2 to diagnose the fault.
- The calibration was successful and SA 03 SPN 521472 FMI 00 is cleared.

  Stop.

2. Determine when the error condition occurs.
a) Turn the key start switch to the on position.
b) Turn the steering wheel through its range of motion.
c) Observe if the error code is reported for various steering wheel positions.

Result

- The error code is reported when the steering wheel is turned, but not when in the center position.

  The most likely cause is a faulty steering sensor box.

  Replace the steering sensor box.

  See step 7 to calibrate the sensor and validate the repair.
- The error code is reported at any position.

  See step 3 to isolate the cause.

3. Check for open circuit on signal or ground.
a) Turn the key start switch to the off position.
b) Turn the battery disconnect switch to the off position.
c) Disconnect the cab harness from the steering sensor box.
d) Install a shorting jumper between contacts C25-4 and C25-5 at the sensor connector.
e) Disconnect the J1 and J2 connectors from the transmission module.
f) Check the resistance between contacts J1-13 and J2-16 at the transmission module.

Result

- The resistance measurements is high (not near 0 ohms).

  Repair or replace the harness.

  See step 7 to calibrate the sensor and validate the repair.
- The resistance is at or near 0 ohms.

  Remove the shorting jumper.

  See step 4 to check for a short from signal to power.

4. Check for a short in the cab harness.
a) Make sure the shorting jumper from step 3 is removed.
b) Disconnect the cab harness from the chassis harness. (C18 from C32 located just above the transmission module.)
c) Check the resistance between C18-47 and all other C18 contacts.

Result

- All resistance measurements are high (not near 0 ohms).

  The cab harness is not the cause.

  Leave the harness disconnected.

  See step 5 to check the chassis harness for a short circuit.

- One or more resistance measurement was at or near 0 ohms.

  Repair or replace the cab harness.

  See step 7 to calibrate the sensor and validate the repair.

5. Check for a short circuit in the chassis harness.

a) Make sure the cab harness is still disconnected from the chassis harness from the previous step.
b) Disconnect the J1 and J2 connectors from the transmission module.
c) Check the resistance between J2-16 and all other J1 and J2 contacts.

Result

- All resistance measurements are high (not near 0 ohms).

  The chassis harness is not the cause.

  Reconnect all harnesses.

  See step 6 to check the function of the sensor.
- One or more resistance measurement was at or near 0 ohms.

  Repair or replace the chassis harness.

  See step 7 to calibrate the sensor and validate the repair.

6. Check the function of the sensor.

a) Reconnect all connectors.
b) Turn the key start switch to the on position.
c) Check the voltage from steering sensor 2 with the steering wheel in the center position.
   If accessible, measure the voltage between contacts 5 and 6 at the steering sensor box
   Otherwise, measure the voltage between contacts J1-13 and J2-16 at the transmission module.
d) Check the voltage from steering sensor 1 with the steering wheel in the center position.
   If accessible, measure the voltage between contacts 2 and 3 at the steering sensor box
   Otherwise, measure the voltage between contacts J1-21 and J2-15 at the transmission module.

Result

- The voltage for sensor 2 is significantly different from sensor 1.

  Sensor 2 is faulty.

  Replace the steering sensor box.

  See step 7 to calibrate the sensor and validate the repair.
- The voltage for sensor 2 is at or near the voltage for sensor 1.

  Recheck the voltages at full-right position.

  Continue.

e) Turn the steering wheel fully to the right, and re-check the voltages from above.

Result

- The voltage for sensor 2 is significantly different from sensor 1.

  Sensor 2 is faulty.

  Replace the steering sensor box.

  See step 7 to calibrate the sensor and validate the repair.
- The voltage for sensor 2 is above 5 volts.

  Replace the steering sensor box.

  See step 7 to calibrate the sensor and validate the repair.

- For both the previous and current measurements, the voltage for sensor 2 is at or near the voltage for sensor 1.

  The sensor is not at fault.

  See step 7 to calibrate the steering position sensors.

7. Check the sensor calibration.

a) Connect all the connectors.
b) Turn the battery disconnect switch to the on position.
c) Turn the key start switch to the on position.
d) Perform the sensor calibration.

Result

- The calibration was successful and SA 03 SPN 521472 FMI 00 is cleared.

  Stop.
- The calibration failed and only SA 03 SPN 521472 FMI 00 is being reported.

  The steering sensor box is likely at fault.

  Replace the steering sensor box.

  Repeat this adjustment step.

10.6.101.1 Steering wheel position sensors electrical schematic

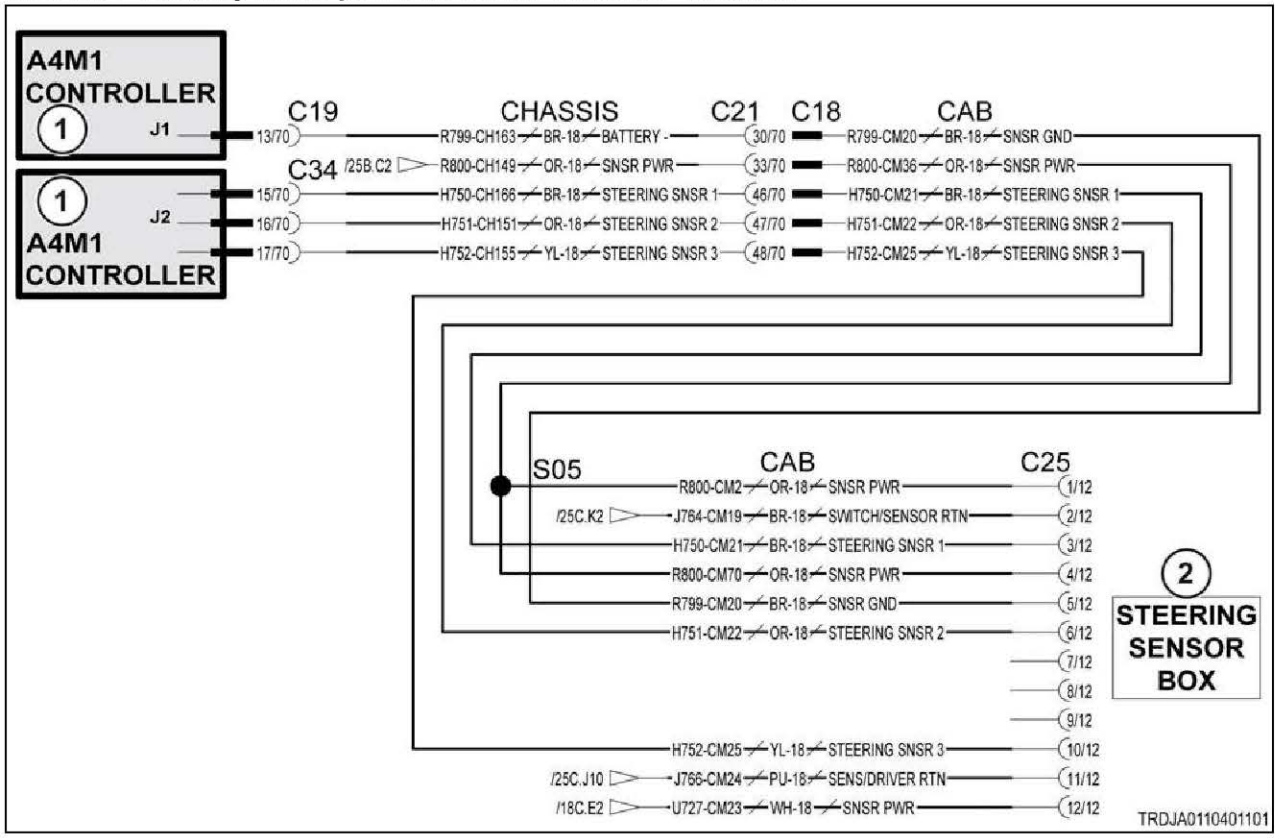

Fig. 256

Schematic legend		
Item	Schematic term	Description
1	A4M1 CONT	Transmission module
2	STEERING SENSOR BOX	Steering sensor box
--	STEERING SNSR	Steering sensor
--	SWITCH/SENSOR RTN	Switch/sensor return
--	SNSR GND	Sensor ground
--	SENS/DRIVER RTN	Sensor/driver return
--	SNSR PWR	Sensor power

10.6.102 Code SA 03 SPN 521472 FMI 01

The steering wheel position sensor 2 below normal range .

The transmission module is detecting low or no voltage from the steering wheel position sensor. The sensor produces a variable voltage depending on the wheel position from left to right. Full left should be approximately 0.5 volts, center should be approximately 2.5 volts, and full right should be approximately 4.5 volts. If the voltage is too low, the most likely cause is an open circuit on power or a short circuit on the signal wire. The 3 steering sensors are redundant, but have slightly different circuits. This can aid in isolating the cause.

Diagnosis and solution

1. Calibrate the steering position sensors.
   a) Turn the key start switch to the on position.
   b) Follow the screen prompts and perform the sensor calibration.

   Result

   - The calibration failed and SA 03 SPN 521472 FMI 01 is being reported.

     See step 2 to diagnose the fault.
   - The calibration was successful and SA 03 SPN 521472 FMI 01 is cleared.

     Stop.

2. Determine when the error condition occurs.
   a) Turn the key start switch to the on position.
   b) Turn the steering wheel through its range of motion.
   c) Observe if the error code is reported for various steering wheel positions.

   Result

   - The error code is reported when the steering wheel is turned.

     The most likely cause is a faulty steering sensor box.

     Replace the steering sensor box.

     See step 7 to calibrate the sensor and validate the repair.
   - The error code is reported at any position.

     See step 3 to isolate the cause.

3. Observe whether any additional error codes are reported.

Result

- Only SA 03 SPN 521472 FMI 01 is being reported.

  Sensor power is not likely the cause.

  Focus further examination on the steering sensor 2 signal circuit from C25-6 at the steering box to J2-16 at the transmission module.

  Note that the steering sensor box may still be at fault.

  See step 5 to check for a short circuit in the signal wire.
- Steering sensor 1 is also reporting an error. (SA 03 SPN 521471 FMI xx)

  Focus further examination on the 8-volt sensor supply circuit from C25-1 and C25-4 at the steering box to J1-44 at the transmission module.

  See step 4 to check for an open circuit in the sensor power wire.

4. Check for an open circuit on power.

a) Turn the key start switch to the off position.
b) Disconnect the harness from the steering sensor box.
c) Install a shorting jumper onto the sensor connector between contacts C25-4 and C25-5.
d) Disconnect the J1 connector at the transmission module.
e) Measure the resistance at the transmission module connector between contacts J1-13 and J1-44.

Result

- The resistance measurement is high (not near 0 ohms).

  Sensor power is open.

  Note that sensor ground is not suspected, as this would result in SA 03 SPN 521472 FMI 00 being reported.

  Repair or replace the harness.

  See step 7 to calibrate the sensor and validate the repair.
- The resistance measurement is at or near 0 ohms.

  See step 6 to check the function of the sensor.

5. Check for short circuit signal to ground.

a) Turn the key start switch to the off position.
b) Disconnect the harness from the steering sensor box.
c) Disconnect the chassis harness from the cab harness. (Located just above the transmission module.)
d) Disconnect the J1 and J2 connectors at the transmission module.
e) Check resistance from contact J2-16 to all other J1 and J2 connector contacts.

Result

- One or more resistance measurement is at or near 0 ohms.

  Repair or replace the chassis harness.

  See step 7 to calibrate the sensor and validate the repair.
- The resistance is high (not near 0 ohms).

  Continue.

f) Check the resistance from contact C32-47 to all other C32 contacts on the chassis harness.

Result

- One or more resistance measurement is at or near 0 ohms.

  Repair or replace the chassis harness.

  See step 7 to calibrate the sensor and validate the repair.
- The resistance is high (not near 0 ohms).

  The chassis harness is not the cause.

  Continue.

g) Check the resistance from contact C18-47 to all other C18 contacts on the cab harness.

Result

- One or more resistance measurement is at or near 0 ohms.

  Repair or replace the cab harness.

  See step 7 to calibrate the sensor and validate the repair.
- The resistance is high (not near 0 ohms).

  See step 6 to check the function of the sensor.

6. Check the function of the sensor.

a) Reconnect all connectors.

b) Turn the key start switch to the on position.

c) Check the voltage from steering sensor 2 with the steering wheel in the center position.
If accessible, measure the voltage between contacts 5 and 6 at the steering sensor box
Otherwise, measure the voltage between contacts J1-13 and J2-16 at the transmission module.

d) Check the voltage from steering sensor 1 with the steering wheel in the center position.
If accessible, measure the voltage between contacts 2 and 3 at the steering sensor box
Otherwise, measure the voltage between contacts J1-21 and J2-15 at the transmission module.

Result

- The voltage for sensor 2 is significantly different from sensor 1.

  Sensor 2 is faulty.

  Replace the steering sensor box.

  See step 7 to calibrate the sensor and validate the repair.
- The voltage for sensor 2 is at or near the voltage for sensor 1.

  Recheck the voltages at full-left position.

  Continue.

e) Turn the steering wheel fully to the left, and re-check the voltages from above.

Result

- The voltage for sensor 2 is significantly different from sensor 1.

  Sensor 2 is faulty.

  Replace the steering sensor box.

  See step 7 to calibrate the sensor and validate the repair.
- The voltage for sensor 2 is below 0.5 volts.

  Replace the steering sensor box.

  See step 7 to calibrate the sensor and validate the repair.

- For both the previous and current measurements, the voltage for sensor 2 is at or near the voltage for sensor 1.

  The sensor is not at fault.

  See step 7 to calibrate the steering position sensors.

7. Check the sensor calibration.

a) Connect all the connectors.
b) Turn the battery disconnect switch to the on position.
c) Turn the key start switch to the on position.
d) Perform the sensor calibration.

Result

- The calibration was successful and SA 03 SPN 521472 FMI 01 is cleared.

  Stop.
- The calibration failed and only SA 03 SPN 521472 FMI 01 is being reported.

  The steering sensor box is likely at fault.

  Replace the steering sensor box.

  Repeat this adjustment step.

10.6.102.1 Steering wheel position sensors electrical schematic

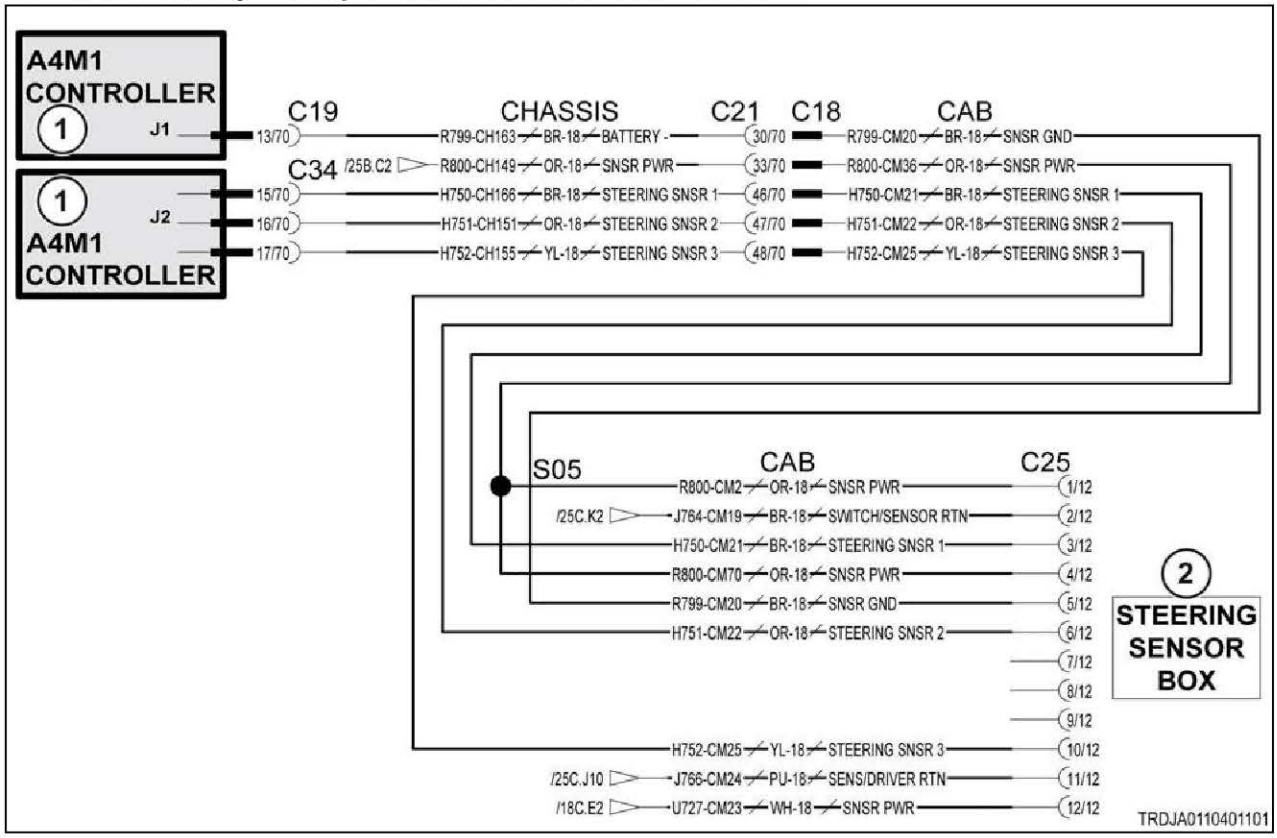

Fig. 257

Schematic legend		
Item	**Schematic term**	**Description**
1	A4M1 CONT	Transmission module
2	STEERING SENSOR BOX	Steering sensor box
--	STEERING SNSR	Steering sensor
--	SWITCH/SENSOR RTN	Switch/sensor return
--	SNSR GND	Sensor ground
--	SENS/DRIVER RTN	Sensor/driver return
--	SNSR PWR	Sensor power

10.6.103 Code SA 03 SPN 521472 FMI 02

The steering wheel position sensor 2 signal out of expected range.

Diagnosis and solution

1. Check the power at the steering wheel position sensor.

a) Turn the key start switch to the off position.
b) Turn the battery disconnect switch to the off position.
c) Remove the key from the battery disconnect switch.
d) Disconnect the steering sensor module harness connector from the sensor .
e) Turn the battery disconnect switch to the on position.
f) Turn the key start switch to the on position.
g) Check the voltage at contact 4 on steering sensor module connector.

Result

Expected result - the voltage is 8 volts.

Results:

- Yes - the voltage is 8 volts.

  see step 2, page 10-500
- No - the voltage in not 8 volts.

  Repair or replace the harness.

  see step 4, page 10-501

2. Check the ground at the steering wheel position sensor.

a) Turn the key start switch to the off position.
b) Turn the battery disconnect switch to the off position.
c) Remove the key from the battery disconnect switch.
d) Disconnect the steering sensor module harness connector from the sensor .
e) Check the resistance at contact 5 on steering sensor module connector to the chassis frame ground.

Result

Expected result - the resistance is less than 5 ohms.

Results:

- Yes - the resistance is less than 5 ohms.

  see step 3, page 10-501

- No - the resistance is not less than 5 ohms.

  Repair or replace the harness.

  see step 4, page 10-501

3. Check the steering wheel position sensor return circuit for short circuit.

a) Turn the key start switch to the off position.
b) Turn the battery disconnect switch to the off position.
c) Remove the key from the battery disconnect switch.
d) Disconnect the harness connectors from the sensor and the fuse block .
e) Check resistance between contact 11 on the steering sensor module connector and contact 22 on the transmission module connector.

Result

Expected result - the resistance is more than 5000 ohms.

Results:

- Yes - the resistance is more than 5000 ohms.

  see step 4, page 10-501
- No - the resistance is not more than 5000 ohms.

  Repair or replace the harness.

  see step 4, page 10-501

4. Check if the diagnostic code remains.

a) Check and clean the harness connector contacts.
b) Connect all the connectors.
c) Turn the battery disconnect switch to the on position.
d) Turn the key start switch to the on position.
e) Operate the machine at low idle.
f) Check if the diagnostic code remains.

Result

Expected result - the diagnostic code is not active.

Results:

- Yes - SPN 521472 FMI 02 is not active.

  Stop.
- No - SPN 521472 FMI 02 is active.

  Failure of the steering sensor module is possible but not common. Exit the procedure and do the procedure again. If the diagnostic code remains active, replace the module.

  Stop.

10.6.103.1 Steering wheel position sensors electrical schematic

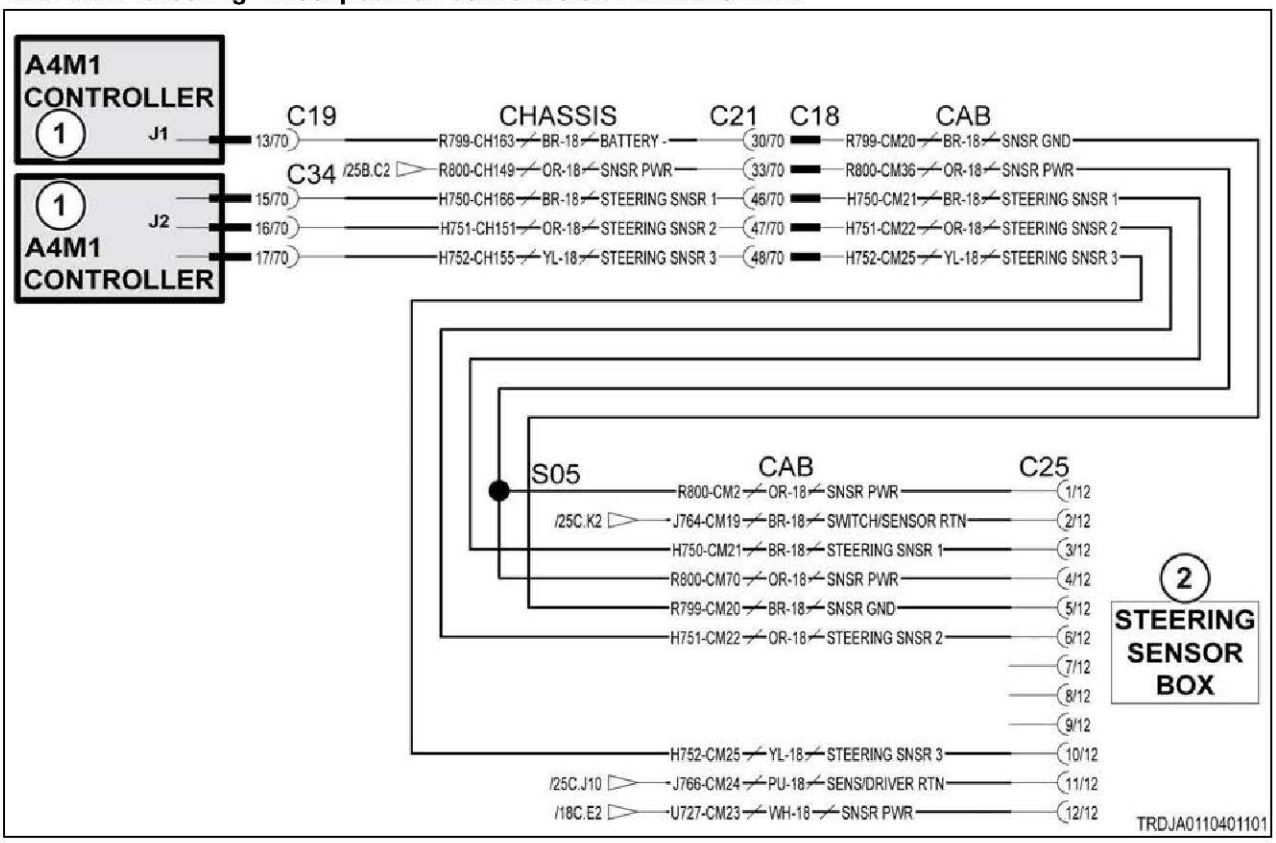

Fig. 258

Schematic legend		
Item	**Schematic term**	**Description**
1	A4M1 CONT	Transmission module
2	STEERING SENSOR BOX	Steering sensor box
--	STEERING SNSR	Steering sensor
--	SWITCH/SENSOR RTN	Switch/sensor return
--	SNSR GND	Sensor ground
--	SENS/DRIVER RTN	Sensor/driver return
--	SNSR PWR	Sensor power

10.6.104 Code SA 3 SPN 521472 FMI 8

The steering wheel position sensor 2 signal is not within expected range.

The transmission module detected abnormal or erratic voltage changes from the steering wheel position sensor. The sensor produces a variable voltage depending on the wheel position from left to right. Full left should be approximately 0.5 volts, center should be approximately 2.5 volts, and full right should be approximately 4.5 volts. If the voltage is erratic, the most likely cause is a loose connection or a faulty sensor. The 3 steering sensors are redundant, but have slightly different circuits. This can aid in isolating the cause.

Diagnosis and solution

1. Determine when the error condition occurs.
   a) Turn the key start switch to the on position, but do not start the machine.

b) Turn the steering wheel through its range of motion.
c) Observe if the error code is reported for various steering wheel positions while the machine is not vibrating from the engine running.

Result

- The error code is reported when the engine is not running.

  The most likely cause is a faulty steering sensor box.

  Replace the steering sensor box.

  See step 4 to calibrate the steering sensor and validate the repair.
- The error code is not reported when the engine is not running.

  Continue.

d) Start the machine.
e) As necessary, operate the machine at low idle, high idle, and travelling to produce machine vibration.
f) Observe if the error code is reported while the machine is vibrating from operation.

Result

- The error is reported when the machine is vibrating.

  The likely cause is a loose connection.

  See step 2 to isolate possible loose connection locations.

2. Observe whether any additional error codes are reported.

Result

- Steering Sensor 1 is also reporting an error (SA 03 SPN 521471 FMI 08).

  Focus further examination on sensor power from C25-4 at the steering sensor to J1-21 at the transmission module.

  See step 3 to inspect harness and connector connections.
- Only SA 03 SPN 521472 FMI 08 is being reported.

  Sensor power is not likely the cause, but sensor signal and ground should be checked.

  Focus further examination on the sensor signal from C25-6 at the steering box to J2-16 at the transmission module.

  Focus further examination on the ground from C25-5 at the steering box to J1-13 at the transmission module.

  Note that the steering sensor box may still be at fault.

  See step 3 to inspect harness and connector connections.

3. Inspect all harness and sensor connections.
a) Turn the key start switch to the off position.
b) Turn the battery disconnect switch to the off position.
c) Inspect and clean all connectors and connector contacts:

- Look for bent or worn pins.
- Look for deformed or oversized sockets.
- Look for corrosion on the pins and sockets. Corrosion is a sign of a loose connection.
- Look for signs of overheating. Overheating is a sign of a poor connection, and can further loosen the pin or socket mount. The whole connector body should be replaced.

d) Make sure to inspect the circuits identified in step 2 as they pass through the following connector locations:

- Connector C25 at the steering sensor box.

- Cab harness to chassis harness connector (C18 & C32).
- Transmission module J1 and J2 connectors.

e) Repair or replace any connector or harness found faulty.

f) See step 4 to calibrate the steering sensor.

4. Check the sensor calibration.

a) Connect all the connectors.

b) Turn the battery disconnect switch to the on position.

c) Turn the key start switch to the on position.

d) Perform the sensor calibration.

Result

- The calibration was successful and SA 03 SPN 521472 FMI 08 is cleared.

  Stop.
- The calibration failed and only SA 03 SPN 521472 FMI 08 is being reported.

  The steering sensor box is likely at fault.

  Replace the steering sensor box.

  Repeat this adjustment step.

10.6.104.1 Steering wheel position sensors electrical schematic

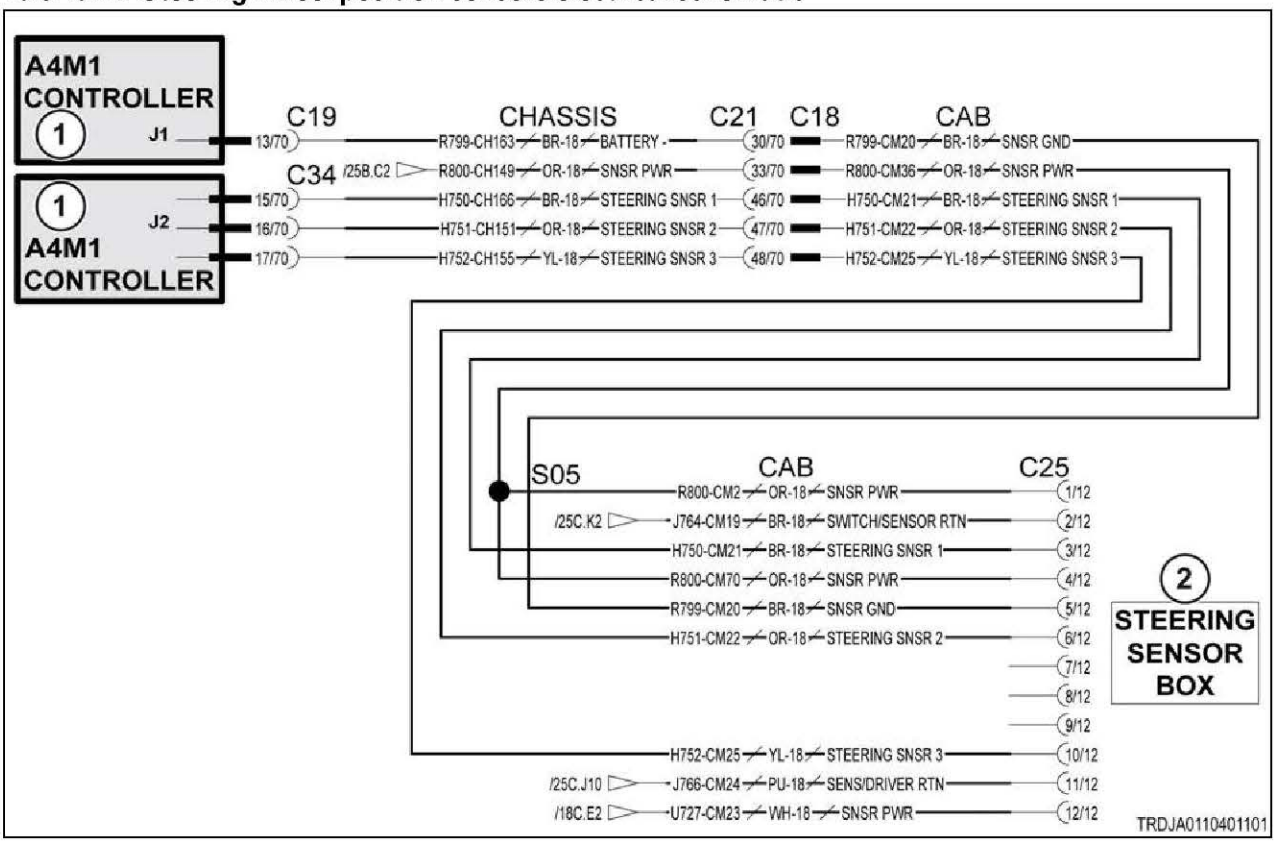

Fig. 259

Schematic legend		
Item	Schematic term	Description
1	A4M1 CONT	Transmission module
2	STEERING SENSOR BOX	Steering sensor box
--	STEERING SNSR	Steering sensor
--	SWITCH/SENSOR RTN	Switch/sensor return
--	SNSR GND	Sensor ground
--	SENS/DRIVER RTN	Sensor/driver return
--	SNSR PWR	Sensor power

10.6.105 Code SA 3 SPN 521472 FMI 12

The steering wheel position sensor 2 component malfunction.

Steering wheel sensor 2 is reporting a position which is in disagreement with sensors 2 and 3. The sensor produces a variable voltage depending on the wheel position from left to right. Full left should be approximately 0.5 volts, center should be approximately 2.5 volts, and full right should be approximately 4.5 volts. If the voltage is not consistent with the remaining sensors, the most likely cause is a faulty sensor. The 3 steering sensors are redundant, but have slightly different circuits. This can aid in isolating the cause.

Diagnosis and solution

1. Calibrate the steering position sensors.
   a) Turn the key start switch to the on position.
   b) Follow the screen prompts and perform the sensor calibration.

   Result

   - The calibration failed and SA 03 SPN 521472 FMI 12 is being reported.

     See step 2 to diagnose the fault.
   - The calibration was successful and SA 03 SPN 521472 FMI 12 is cleared.

     Stop.

2. Check the function of the sensor.
   a) Turn the key start switch to the on position.
   b) Check the voltage from steering sensor 2 with the steering wheel in the center position.
      If accessible, measure the voltage between contacts 5 and 6 at the steering sensor box
      Otherwise, measure the voltage between contacts J1-13 and J2-16 at the transmission module.
   c) Check the voltage from steering sensor 1 with the steering wheel in the center position.
      If accessible, measure the voltage between contacts 2 and 3 at the steering sensor box
      Otherwise, measure the voltage between contacts J1-21 and J2-15 at the transmission module.

   Result

   - The voltage for sensor 2 is significantly different from sensor 1.

     Sensor 2 is faulty.

     Replace the steering sensor box.

     See step 3 to calibrate the sensor and validate the repair.
   - The voltage for sensor 2 is at or near the voltage for sensor 1.

     Recheck the voltages at full-right position.

     Continue.

d) Turn the steering wheel fully to the right, and re-check the voltages from above.

Result

- The voltage for sensor 2 is significantly different from sensor 1.

  Sensor 2 is faulty.

  Replace the steering sensor box.

  See step 3 to calibrate the sensor and validate the repair.
- The voltage for sensor 2 is above 4.5 volts.

  Replace the steering sensor box.

  See step 3 to calibrate the sensor and validate the repair.
- The voltage for sensor 2 is at or near the voltage for sensor 1.

  Recheck the voltages at full-right position.

  Continue.

e) Turn the steering wheel fully to the left, and re-check the voltages from above.

Result

- The voltage for sensor 2 is significantly different from sensor 1.

  Sensor 2 is faulty.

  Replace the steering sensor box.

  See step 3 to calibrate the sensor and validate the repair.
- The voltage for sensor 2 is below 0.5 volts.

  Replace the steering sensor box.

  See step 3 to calibrate the sensor and validate the repair.
- The voltage for sensor 2 is at or near the voltage for sensor 1.

  The sensor is not at fault.

  See step 3 to calibrate the steering position sensors.

3. Check the sensor calibration.

a) Connect all the connectors.
b) Turn the battery disconnect switch to the on position.
c) Turn the key start switch to the on position.
d) Perform the sensor calibration.

Result

- The calibration was successful and SA 03 SPN 521472 FMI 12 is cleared.

  Stop.
- The calibration failed and only SA 03 SPN 521472 FMI 12 is being reported.

  The steering sensor box is likely at fault.

  Replace the steering sensor box.

  Repeat this adjustment step.

10.6.105.1 Steering wheel position sensors electrical schematic

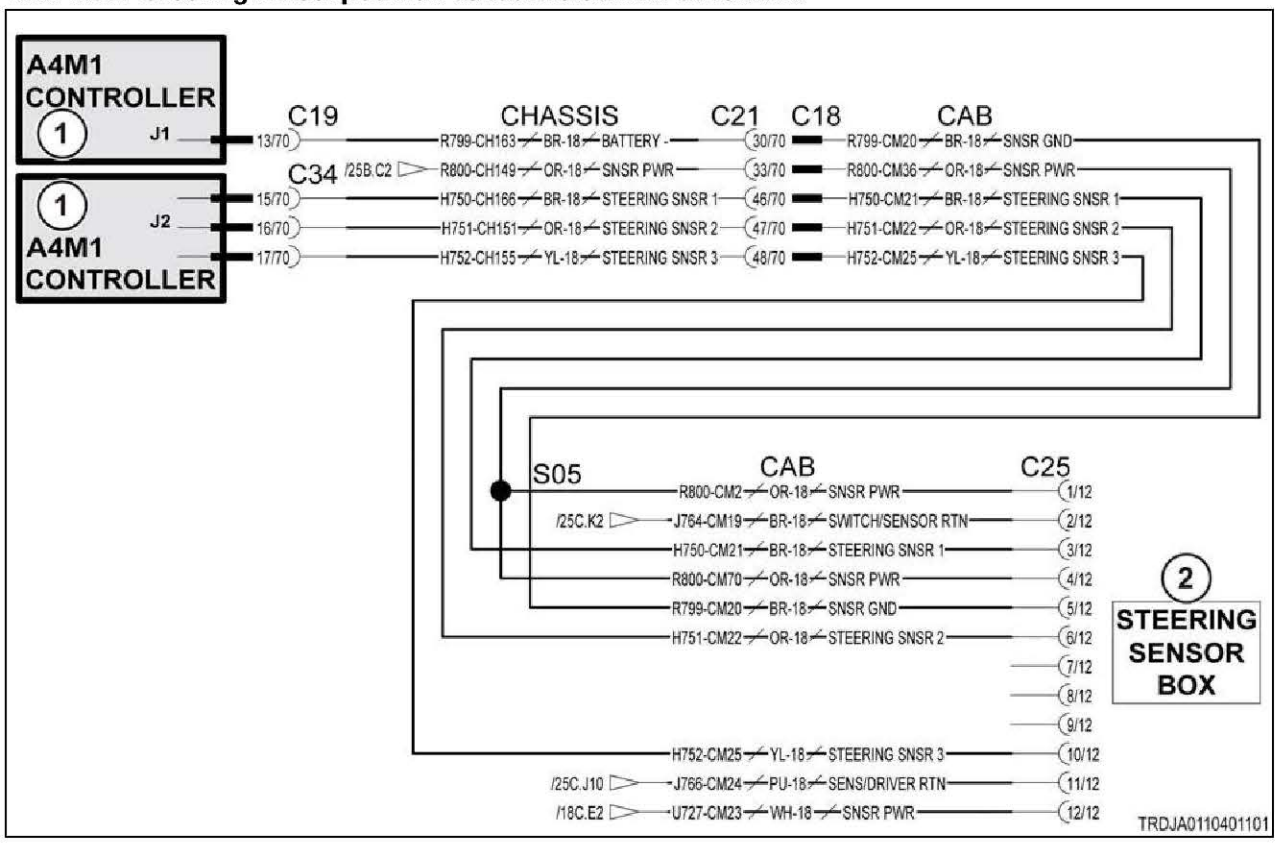

Fig. 260

Schematic legend		
Item	**Schematic term**	**Description**
1	A4M1 CONT	Transmission module
2	STEERING SENSOR BOX	Steering sensor box
--	STEERING SNSR	Steering sensor
--	SWITCH/SENSOR RTN	Switch/sensor return
--	SNSR GND	Sensor ground
--	SENS/DRIVER RTN	Sensor/driver return
--	SNSR PWR	Sensor power

10.6.106 Code SA 03 SPN 521472 FMI 13

The steering wheel position sensor 2 is out of calibration.

Steering wheel sensor 2 is reporting a position which is inconsistent with its calibrated range. The 3 steering sensors are redundant, but are calibrated together.

Diagnosis and solution

Calibrate the steering position sensors.

a) Turn the key start switch to the on position.

b) Follow the screen prompts and perform the sensor calibration.

Result

- The calibration failed and SA 03 SPN 521472 FMI 13 is being reported.

  Check for additional diagnostic codes and troubleshoot the sensor as described for that code.
- The calibration was successful and SA 03 SPN 521472 FMI 13 is cleared.

  Stop.

10.6.106.1 Steering wheel position sensors electrical schematic

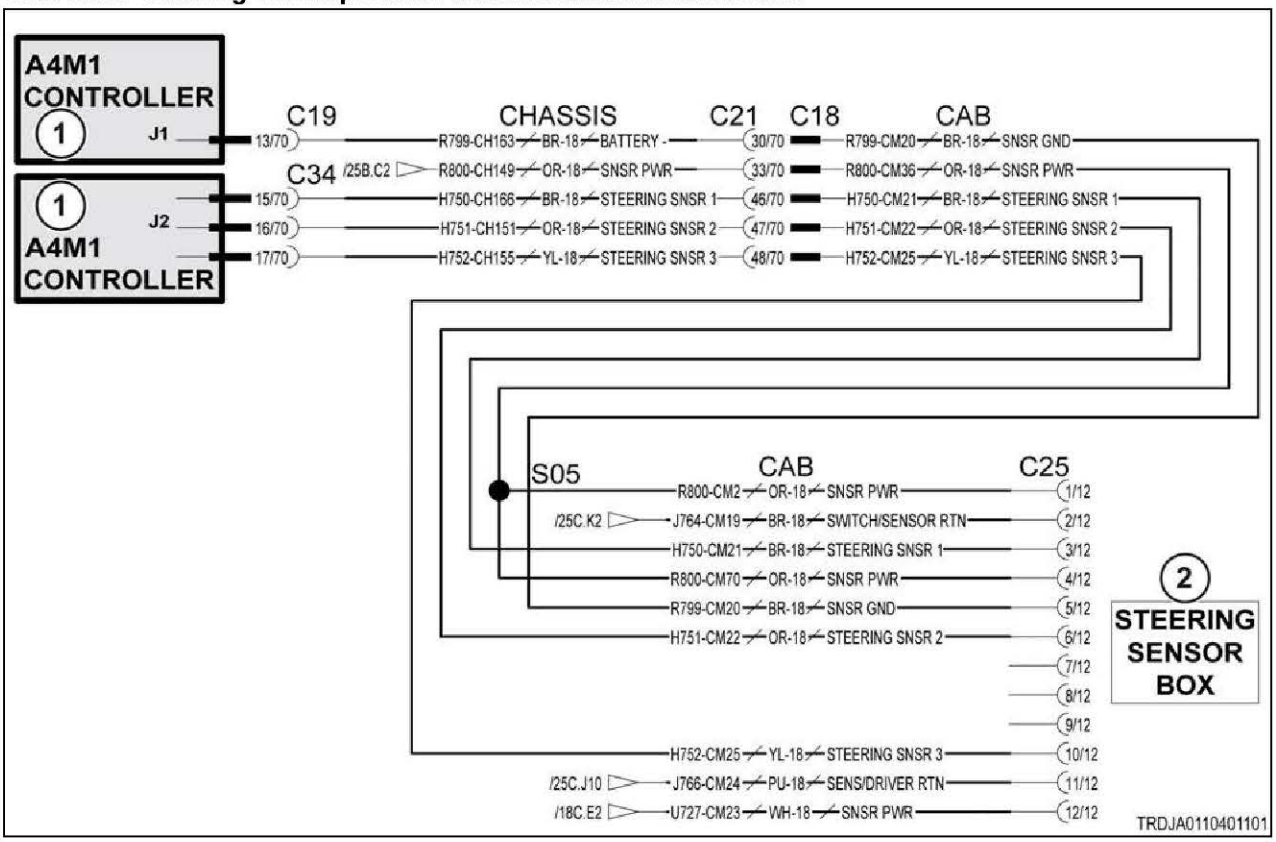

Fig. 261

Schematic legend		
Item	**Schematic term**	**Description**
1	A4M1 CONT	Transmission module
2	STEERING SENSOR BOX	Steering sensor box
--	STEERING SNSR	Steering sensor
--	SWITCH/SENSOR RTN	Switch/sensor return
--	SNSR GND	Sensor ground
--	SENS/DRIVER RTN	Sensor/driver return
--	SNSR PWR	Sensor power

10.6.107 Code SA 03 SPN 521473 FMI 00

The steering wheel position sensor 3 signal is above normal range .

The transmission module is detecting elevated voltage from the steering wheel position sensor. The sensor produces a variable voltage depending on the wheel position from left to right. Full left should be approximately 0.5 volts, center should be approximately 2.5 volts, and full right should be approximately 4.5

volts. If the voltage is elevated, the most likely cause is an open circuit in the signal wire. The 3 steering sensors are redundant, but have slightly different circuits. This can aid in isolating the cause.

Diagnosis and solution

1. Calibrate the steering position sensors.
a) Turn the key start switch to the on position.
b) Follow the screen prompts and perform the sensor calibration.

Result

- The calibration failed and SA 03 SPN 521473 FMI 00 is being reported.

  See step 2 to diagnose the fault.
- The calibration was successful and SA 03 SPN 521473 FMI 00 is cleared.

  Stop.

2. Determine when the error condition occurs.
a) Turn the key start switch to the on position.
b) Turn the steering wheel through its range of motion.
c) Observe if the error code is reported for various steering wheel positions.

Result

- The error code is reported when the steering wheel is turned, but not when in the center position.

  The most likely cause is a faulty steering sensor box.

  Replace the steering sensor box.

  See step 8 to calibrate the sensor and validate the repair.
- The error code is reported at any position.

  See step 3 to isolate the cause.

3. Observe whether any additional error codes are reported.

Result

- Only SA 03 SPN 521473 FMI 00 is being reported.

  Sensor power is not likely the cause.

  The signal circuit may be open, or shorted to positive.

  Focus further examination on the steering sensor 3 signal circuit from C25-10 at the steering box to J2-17 at the transmission module.

  Note that the steering sensor box may still be at fault.

  See step 4 to check for an open circuit in the signal or ground wire.
- The inching pedal sensor is also reporting an error. (SA 03 SPN 684 FMI xx)

  Possible open ground wire.

  Focus further examination on the sensor ground circuit from C25-11 at the steering box to J2-22 at the transmission module.

  See step 4 to check for an open ground.

4. Check for open circuit on signal or ground.
a) Turn the key start switch to the off position.
b) Turn the battery disconnect switch to the off position.
c) Disconnect the cab harness from the steering sensor box.
d) Install a shorting jumper between contacts C25-10 and C25-11 at the sensor connector.
e) Disconnect the J2 connector from the transmission module.

f) Check the resistance between contacts J2-22 and J2-17 at the transmission module.

Result

- The resistance measurement is high (not near 0 ohms).

  Either the ground or signal wires are open.

  Repair or replace the harness.

  See step 8 to calibrate the sensor and validate the repair.
- The resistance is at or near 0 ohms.

  Remove the shorting jumper.

  See step 5 to check for a short from signal to power.

5. Check for a short in the cab harness.

a) Make sure the shorting jumper from step 4 is removed.

b) Disconnect the cab harness from the chassis harness. (C18 from C32 located just above the transmission module.)

c) Check the resistance between C18-48 and all other C18 contacts.

Result

- All resistance measurements are high (not near 0 ohms).

  The cab harness is not the cause.

  Leave the harness disconnected.

  See step 6 to check the chassis harness for a short circuit.
- One or more resistance measurement was at or near 0 ohms.

  Repair or replace the cab harness.

  See step 8 to calibrate the sensor and validate the repair.

6. Check for a short circuit in the chassis harness.

a) Make sure the cab harness is still disconnected from the chassis harness from the previous step.

b) Disconnect the J1 and J2 connectors from the transmission module.

c) Check the resistance between J2-17 and all other J1 and J2 contacts.

Result

- All resistance measurements are high (not near 0 ohms).

  The chassis harness is not the cause.

  Reconnect all harnesses.

  See step 7 to check the function of the sensor.
- One or more resistance measurement was at or near 0 ohms.

  Repair or replace the chassis harness.

  See step 8 to calibrate the sensor and validate the repair.

7. Check the function of the sensor.

a) Reconnect all connectors.

b) Turn the key start switch to the on position.

c) Check the voltage from steering sensor 3 with the steering wheel in the center position.

If accessible, measure the voltage between contacts 10 and 11 at the steering sensor box

Otherwise, measure the voltage between contacts J2-22 and J2-17 at the transmission module.

d) Check the voltage from steering sensor 2 with the steering wheel in the center position.

If accessible, measure the voltage between contacts 5 and 6 at the steering sensor box

Otherwise, measure the voltage between contacts J1-13 and J2-16 at the transmission module.

Result

- The voltage for sensor 3 is significantly different from sensor 2.

  Sensor 3 is faulty.

  Replace the steering sensor box.

  See step 8 to calibrate the sensor and validate the repair.
- The voltage for sensor 3 is at or near the voltage for sensor 2.

  Recheck the voltages at full-right position.

  Continue.

e) Turn the steering wheel fully to the right, and re-check the voltages from above.

Result

- The voltage for sensor 3 is significantly different from sensor 2.

  Sensor 3 is faulty.

  Replace the steering sensor box.

  See step 8 to calibrate the sensor and validate the repair.
- The voltage for sensor 3 is above 5 volts.

  Replace the steering sensor box.

  See step 8 to calibrate the sensor and validate the repair.
- For both the previous and current measurements, the voltage for sensor 3 is at or near the voltage for sensor 2.

  The sensor is not at fault.

  See step 8 to calibrate the steering position sensors.

8. Check the sensor calibration.

a) Connect all the connectors.
b) Turn the battery disconnect switch to the on position.
c) Turn the key start switch to the on position.
d) Perform the sensor calibration.

Result

- The calibration was successful and SA 03 SPN 521473 FMI 00 is cleared.

  Stop.
- The calibration failed and only SA 03 SPN 521473 FMI 00 is being reported.

  The steering sensor box is likely at fault.

  Replace the steering sensor box.

  Repeat this adjustment step.

10.6.107.1 Steering wheel position sensors electrical schematic

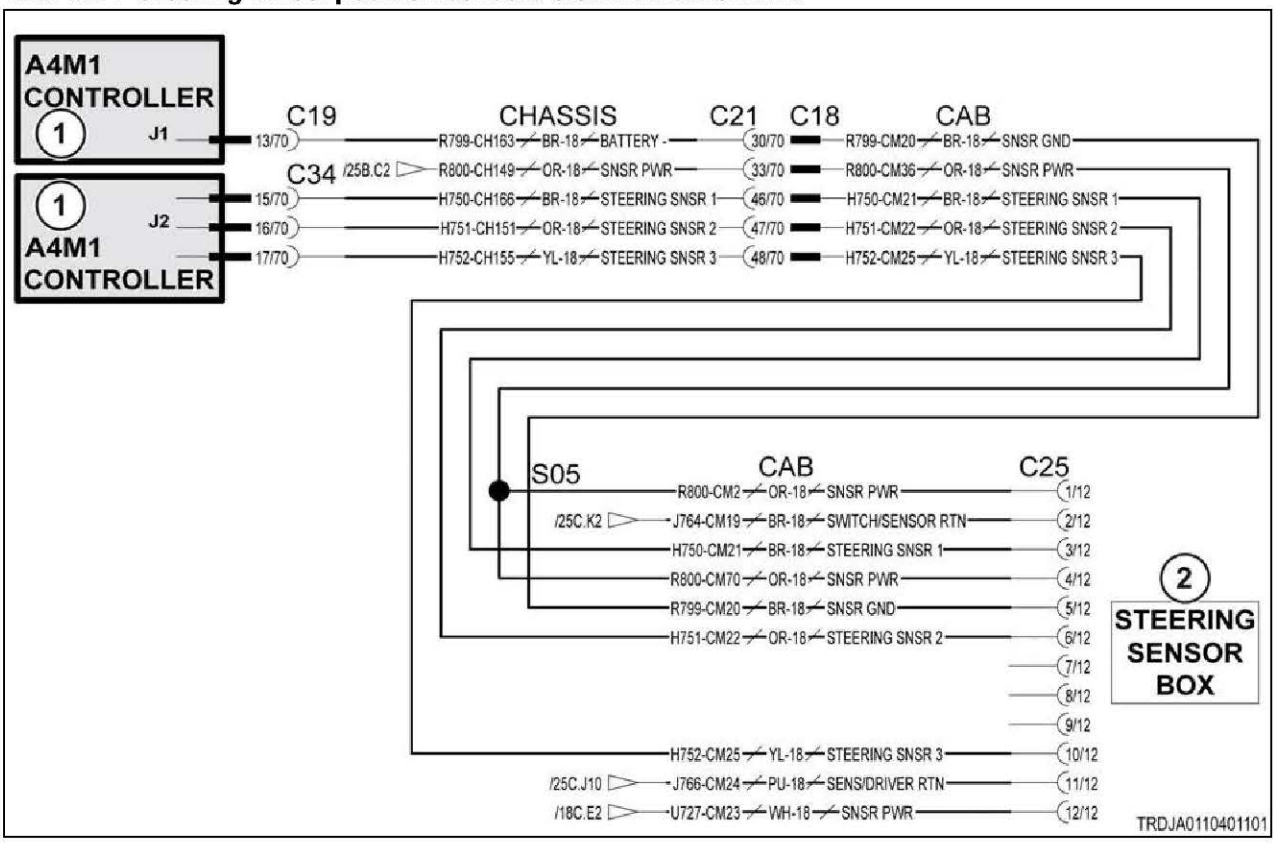

Fig. 262

Schematic legend		
Item	**Schematic term**	**Description**
1	A4M1 CONT	Transmission module
2	STEERING SENSOR BOX	Steering sensor box
--	STEERING SNSR	Steering sensor
--	SWITCH/SENSOR RTN	Switch/sensor return
--	SNSR GND	Sensor ground
--	SENS/DRIVER RTN	Sensor/driver return
--	SNSR PWR	Sensor power

10.6.108 Code SA 03 SPN 521473 FMI 01

The steering wheel position sensor 3 below normal operational range .

The transmission module is detecting low or no voltage from the steering wheel position sensor. The sensor produces a variable voltage depending on the wheel position from left to right. Full left should be approximately 0.5 volts, center should be approximately 2.5 volts, and full right should be approximately 4.5 volts. If the voltage is too low, the most likely cause is an open circuit on power or a short circuit on the signal wire. The 3 steering sensors are redundant, but have slightly different circuits. This can aid in isolating the cause.

Diagnosis and solution

1. Calibrate the steering position sensors.
   a) Turn the key start switch to the on position.

b) Follow the screen prompts and perform the sensor calibration.

Result

- The calibration failed and SA 03 SPN 521473 FMI 01 is being reported.

  See step 2 to diagnose the fault.
- The calibration was successful and SA 03 SPN 521473 FMI 01 is cleared.

  Stop.

2. Determine when the error condition occurs.

a) Turn the key start switch to the on position.
b) Turn the steering wheel through its range of motion.
c) Observe if the error code is reported for various steering wheel positions.

Result

- The error code is reported when the steering wheel is turned.

  The most likely cause is a faulty steering sensor box.

  Replace the steering sensor box.

  See step 6 to calibrate the sensor and validate the repair.
- The error code is reported at any position.

  See step 3 to check for power at the sensor.

3. Check for power at the sensor.

a) Turn the key start switch to the on position.
b) Check the voltage from contact C25-11 to C25-12 at the steering sensor box.

Result

- Voltage is 0 volts.

  Open circuit in sensor power.

  Note, sensor ground is not suspected, as this would cause SA 03 SPN 521473 FMI 00 to be reported.

  Repair or replace the harness.

  See step 6 to calibrate the sensor and validate the repair.
- Voltage is 10 volts.

  See step 4 to check signal to ground short.

4. Check for short circuit signal to ground.

a) Turn the key start switch to the off position.
b) Disconnect the harness from the steering sensor box.
c) Disconnect the chassis harness from the cab harness. (Located just above the transmission module.)
d) Disconnect the J1 and J2 connectors at the transmission module.
e) Check resistance from contact J2-17 to all other J1 and J2 connector contacts.

Result

- One or more resistance measurement is at or near 0 ohms.

  Repair or replace the chassis harness.

  See step 6 to calibrate the sensor and validate the repair.

- The resistance is high (not near 0 ohms).

  Continue.

f) Check the resistance from contact C32-48 to all other C32 contacts on the chassis harness.

Result

- One or more resistance measurement is at or near 0 ohms.

  Repair or replace the chassis harness.

  See step 6 to calibrate the sensor and validate the repair.
- The resistance is high (not near 0 ohms).

  The chassis harness is not the cause.

  Continue.

g) Check the resistance from contact C18-48 to all other C18 contacts on the cab harness.

Result

- One or more resistance measurement is at or near 0 ohms.

  Repair or replace the cab harness.

  See step 6 to calibrate the sensor and validate the repair.
- The resistance is high (not near 0 ohms).

  See step 5 to check sensor function.

5. Check the function of the sensor.

a) Reconnect all connectors.

b) Turn the key start switch to the on position.

c) Check the voltage from steering sensor 3 with the steering wheel in the center position.
If accessible, measure the voltage between contacts 11 and 10 at the steering sensor box
Otherwise, measure the voltage between contacts J2-22 and J2-17 at the transmission module.

d) Check the voltage from steering sensor 2 with the steering wheel in the center position.
If accessible, measure the voltage between contacts 5 and 6 at the steering sensor box
Otherwise, measure the voltage between contacts J1-13 and J2-16 at the transmission module.

Result

- The voltage for sensor 3 is significantly different from sensor 2.

  Sensor 3 is faulty.

  Replace the steering sensor box.

  See step 6 to calibrate the sensor and validate the repair.
- The voltage for sensor 3 is at or near the voltage for sensor 2.

  Recheck the voltages at full-left position.

  Continue.

e) Turn the steering wheel fully to the left, and re-check the voltages from above.

Result

- The voltage for sensor 3 is significantly different from sensor 2.

  Sensor 3 is faulty.

  Replace the steering sensor box.

  See step 6 to calibrate the sensor and validate the repair.

- The voltage for sensor 3 is below 0.5 volts.

  Replace the steering sensor box.

  See step 6 to calibrate the sensor and validate the repair.
- For both the previous and current measurements, the voltage for sensor 3 is at or near the voltage for sensor 2.

  The sensor is not at fault.

  See step 6 to calibrate the steering position sensors.

6. Check the sensor calibration.

a) Connect all the connectors.
b) Turn the battery disconnect switch to the on position.
c) Turn the key start switch to the on position.
d) Perform the sensor calibration.

Result

- The calibration was successful and SA 03 SPN 521473 FMI 01 is cleared.

  Stop.
- The calibration failed and only SA 03 SPN 521473 FMI 01 is being reported.

  The steering sensor box is likely at fault.

  Replace the steering sensor box.

  Repeat this adjustment step.

10.6.108.1 Steering wheel position sensors electrical schematic

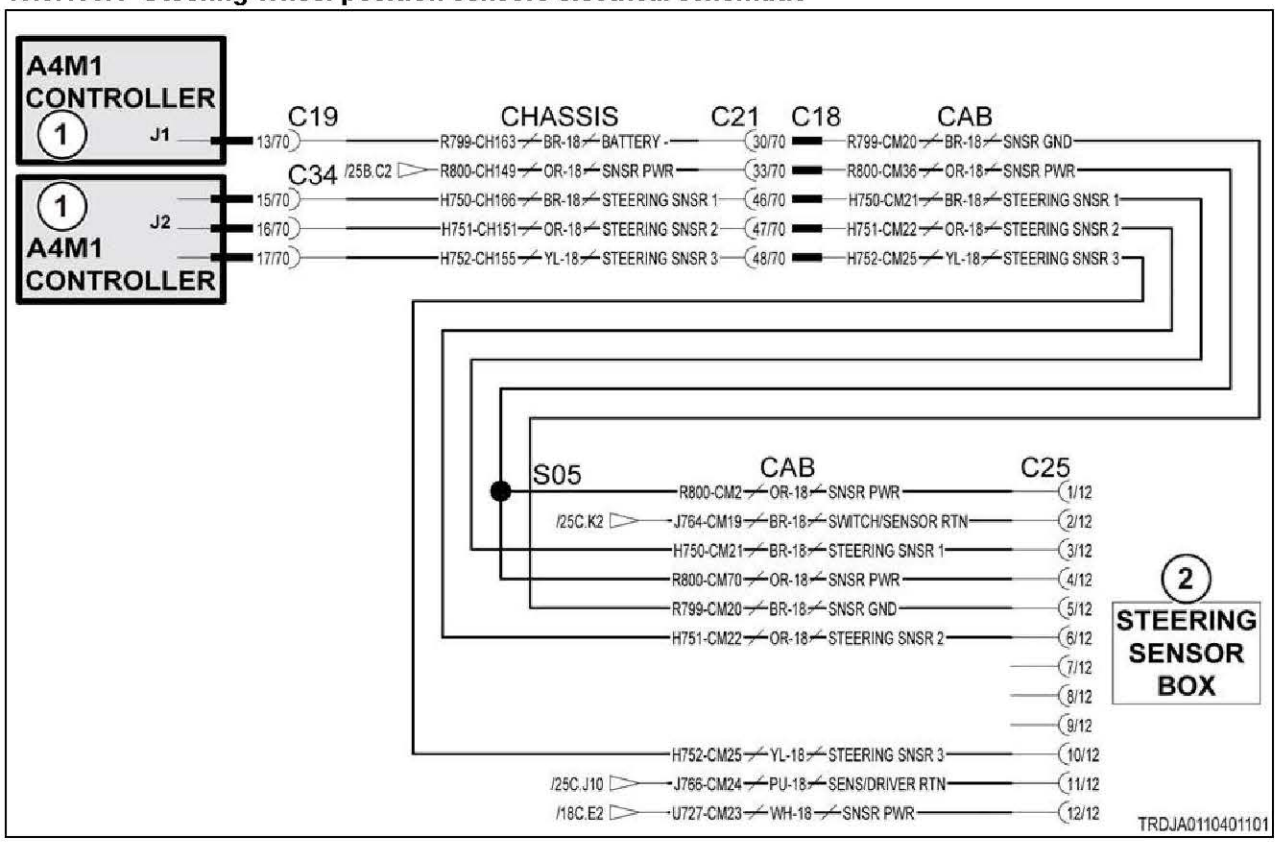

Fig. 263

Schematic legend		
Item	Schematic term	Description
1	A4M1 CONT	Transmission module
2	STEERING SENSOR BOX	Steering sensor box
--	STEERING SNSR	Steering sensor
--	SWITCH/SENSOR RTN	Switch/sensor return
--	SNSR GND	Sensor ground
--	SENS/DRIVER RTN	Sensor/driver return
--	SNSR PWR	Sensor power

10.6.109 Code SA 03 SPN 521473 FMI 02

The steering wheel position sensor 3 signal out of expected range.

Diagnosis and solution

1. Check the power at the steering wheel position sensor.

a) Turn the key start switch to the off position.
b) Turn the battery disconnect switch to the off position.
c) Remove the key from the battery disconnect switch.
d) Disconnect the steering sensor module harness connector from the sensor .
e) Turn the battery disconnect switch to the on position.
f) Turn the key start switch to the on position.
g) Check the voltage at contact 12 on steering sensor module connector.

Result

Expected result - the voltage is 10 volts.

Results:

- Yes - the voltage is 10 volts.

  see step 2, page 10-516
- No - the voltage in not 10 volts.

  Repair or replace the harness.

  see step 4, page 10-517

2. Check the ground at the steering wheel position sensor.

a) Turn the key start switch to the off position.
b) Turn the battery disconnect switch to the off position.
c) Remove the key from the battery disconnect switch.
d) Disconnect the steering sensor module harness connector from the sensor .
e) Check the resistance at contact 5 on steering sensor module connector to the chassis frame ground.

Result

Expected result - the resistance is less than 5 ohms.

Results:

- Yes - the resistance is less than 5 ohms.

  see step 3, page 10-517

- No - the resistance is not less than 5 ohms.

  Repair or replace the harness.

  see step 4, page 10-517

3. Check the steering wheel position sensor return circuit for short circuit.

a) Turn the key start switch to the off position.
b) Turn the battery disconnect switch to the off position.
c) Remove the key from the battery disconnect switch.
d) Disconnect the harness connectors from the sensor and the fuse block .
e) Check resistance between contact 11 on the steering sensor module connector and contact 22 on the transmission module connector.

Result

Expected result - the resistance is more than 5000 ohms.

Results:

- Yes - the resistance is more than 5000 ohms.

  see step 4, page 10-517
- No - the resistance is not more than 5000 ohms.

  Repair or replace the harness.

  see step 4, page 10-517

4. Check if the diagnostic code remains.

a) Check and clean the harness connector contacts.
b) Connect all the connectors.
c) Turn the battery disconnect switch to the on position.
d) Turn the key start switch to the on position.
e) Operate the machine at low idle.
f) Check if the diagnostic code remains.

Result

Expected result - the diagnostic code is not active.

Results:

- Yes - SPN 521473 FMI 02 is not active.

  Stop.
- No - SPN 521473 FMI 02 is active.

  Failure of the steering sensor module is possible but not common. Exit the procedure and do the procedure again. If the diagnostic code remains active, replace the module.

  Stop.

10.6.109.1 Steering wheel position sensors electrical schematic

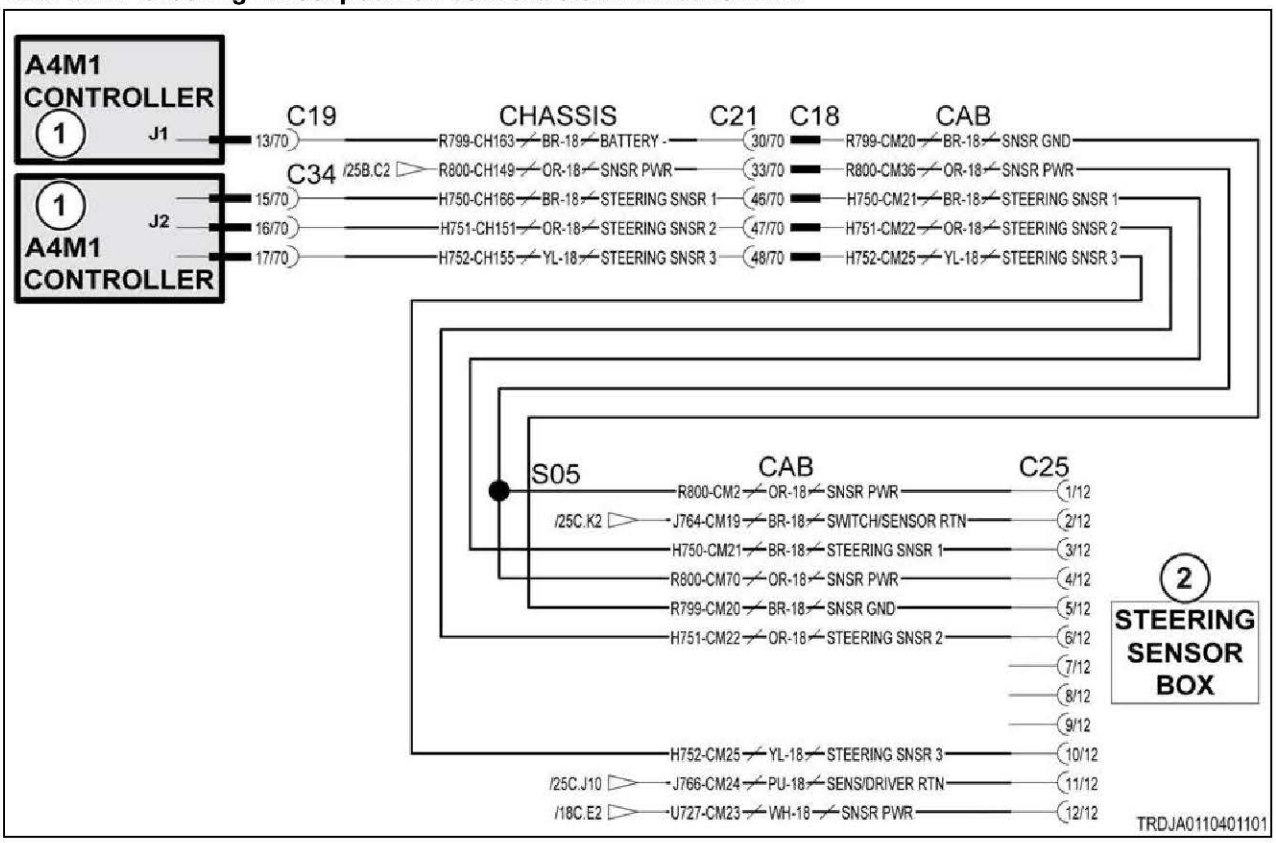

Fig. 264

Schematic legend		
Item	**Schematic term**	**Description**
1	A4M1 CONT	Transmission module
2	STEERING SENSOR BOX	Steering sensor box
--	STEERING SNSR	Steering sensor
--	SWITCH/SENSOR RTN	Switch/sensor return
--	SNSR GND	Sensor ground
--	SENS/DRIVER RTN	Sensor/driver return
--	SNSR PWR	Sensor power

10.6.110 Code SA 03 SPN 521473 FMI 08

The steering wheel position sensor 3 signal is not within expected range.

The transmission module detected abnormal or erratic voltage changes from the steering wheel position sensor. The sensor produces a variable voltage depending on the wheel position from left to right. Full left should be approximately 0.5 volts, center should be approximately 2.5 volts, and full right should be approximately 4.5 volts. If the voltage is erratic, the most likely cause is a loose connection or a faulty sensor. The 3 steering sensors are redundant, but have slightly different circuits. This can aid in isolating the cause.

Diagnosis and solution

1. Determine when the error condition occurs.
   a) Turn the key start switch to the on position, but do not start the machine.

b) Turn the steering wheel through its range of motion.
c) Observe if the error code is reported for various steering wheel positions while the machine is not vibrating from the engine running.

Result

- The error code is reported when the engine is not running.

  The most likely cause is a faulty steering sensor box.

  Replace the steering sensor box.

  See step 4 to calibrate the steering sensor and validate the repair.
- The error code is not reported when the engine is not running.

  Continue.

d) Start the machine.
e) As necessary, operate the machine at low idle, high idle, and travelling to produce machine vibration.
f) Observe if the error code is reported while the machine is vibrating from operation.

Result

- The error is reported when the machine is vibrating.

  The likely cause is a loose connection.

  See step 2 to isolate possible loose connection locations.

2. Observe whether any additional error codes are reported.

Result

- Only SA 03 SPN 521473 FMI 08 is being reported.

  Sensor ground is not likely the cause, but sensor power and signal cannot be eliminated.

  Note that the steering sensor box may still be at fault.

  Focus further examination on the sensor signal from C25-10 at the steering box to J2-17 at the transmission module.

  Focus further examination on the sensor power from C25-12 at the steering box to J1-69 at the transmission module.

  See step 3 to inspect harness and connector connections.
- An inching pedal sensor error is also reported. (SA 03 SPN 684 FMI xx)

  Focus further examination on the sensor ground from C25-11 at the steering box to J2-22 at the transmission module.

  See step 3 to inspect harness and connector connections.

3. Inspect all harness and sensor connections.
a) Turn the key start switch to the off position.
b) Turn the battery disconnect switch to the off position.
c) Inspect and clean all connectors and connector contacts:

- Look for bent or worn pins.
- Look for deformed or oversized sockets.
- Look for corrosion on the pins and sockets. Corrosion is a sign of a loose connection.
- Look for signs of overheating. Overheating is a sign of a poor connection, and can further loosen the pin or socket mount. The whole connector body should be replaced.

d) Make sure to inspect the circuits identified in step 2 as they pass through the following connector locations:

- Connector C25 at the steering sensor box.

- Cab harness to chassis harness connector (C18 & C32).
- Transmission module J1 and J2 connectors.

e) Repair or replace any connector or harness found faulty.

f) See step 4 to calibrate the steering sensor.

4. Check the sensor calibration.

a) Connect all the connectors.

b) Turn the battery disconnect switch to the on position.

c) Turn the key start switch to the on position.

d) Perform the sensor calibration.

Result

- The calibration was successful and SA 03 SPN 521473 FMI 08 is cleared.

  Stop.
- The calibration failed and only SA 03 SPN 521473 FMI 08 is being reported.

  The steering sensor box is likely at fault.

  Replace the steering sensor box.

  Repeat this adjustment step.

10.6.110.1 Steering wheel position sensors electrical schematic

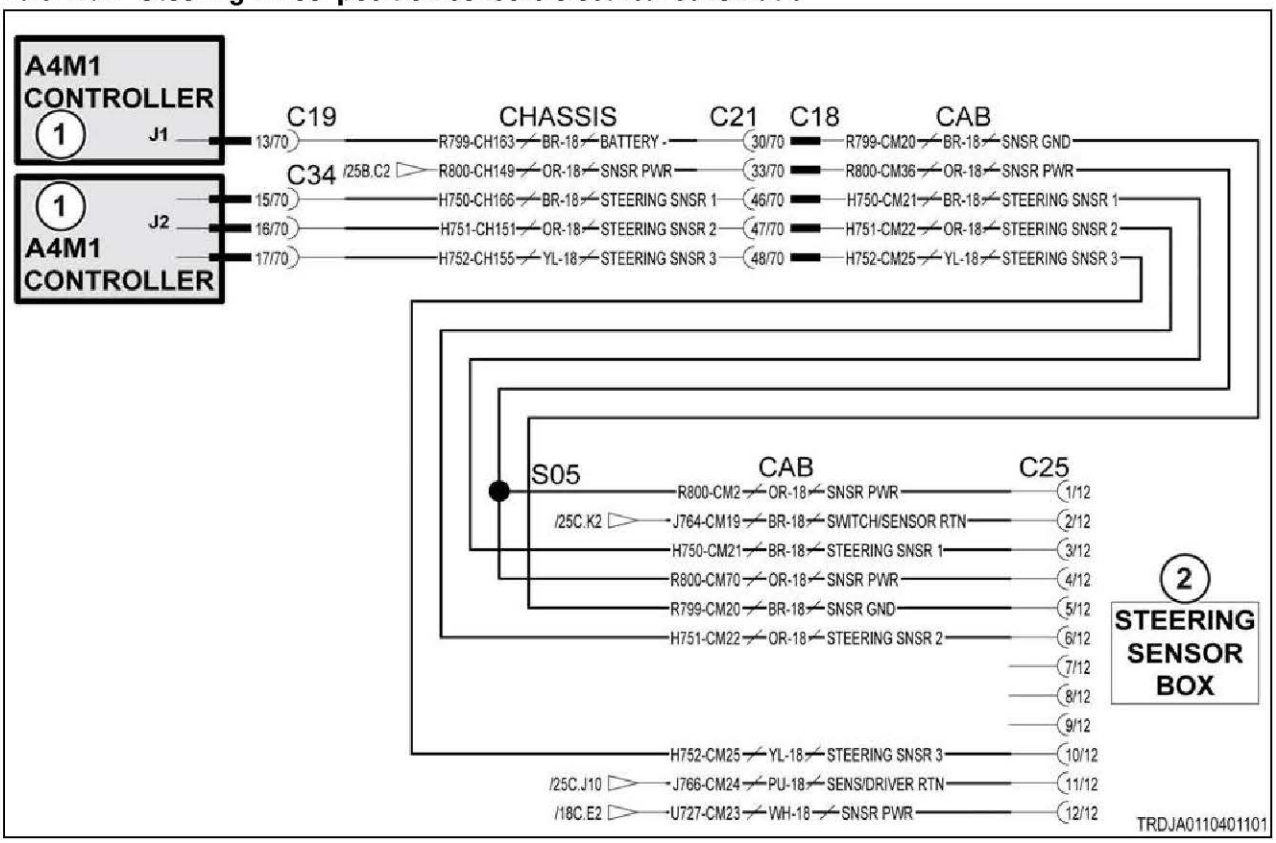

Fig. 265

Schematic legend		
Item	**Schematic term**	**Description**
1	A4M1 CONT	Transmission module
2	STEERING SENSOR BOX	Steering sensor box
--	STEERING SNSR	Steering sensor
--	SWITCH/SENSOR RTN	Switch/sensor return
--	SNSR GND	Sensor ground
--	SENS/DRIVER RTN	Sensor/driver return
--	SNSR PWR	Sensor power

10.6.111 Code SA 03 SPN 521473 FMI 12

The steering wheel position sensor 3 component malfunction.

Steering wheel sensor 3 is reporting a position which is in disagreement with sensors 1 and 2. The sensor produces a variable voltage depending on the wheel position from left to right. Full left should be approximately 0.5 volts, center should be approximately 2.5 volts, and full right should be approximately 4.5 volts. If the voltage is not consistent with the remaining sensors, the most likely cause is a faulty sensor. The 3 steering sensors are redundant, but have slightly different circuits. This can aid in isolating the cause.

Diagnosis and solution

1. Calibrate the steering position sensors.
   a) Turn the key start switch to the on position.
   b) Follow the screen prompts and perform the sensor calibration.

   Result

   - The calibration failed and SA 03 SPN 521473 FMI 12 is being reported.

     See step 2 to diagnose the fault.
   - The calibration was successful and SA 03 SPN 521473 FMI 12 is cleared.

     Stop.

2. Check the function of the sensor.
   a) Turn the key start switch to the on position.
   b) Check the voltage from steering sensor 3 with the steering wheel in the center position.
      If accessible, measure the voltage between contacts 11 and 10 at the steering sensor box
      Otherwise, measure the voltage between contacts J2-22 and J2-17 at the transmission module.
   c) Check the voltage from steering sensor 2 with the steering wheel in the center position.
      If accessible, measure the voltage between contacts 5 and 6 at the steering sensor box
      Otherwise, measure the voltage between contacts J1-13 and J2-16 at the transmission module.

   Result

   - The voltage for sensor 3 is significantly different from sensor 2.

     Sensor 3 is faulty.

     Replace the steering sensor box.

     See step 3 to calibrate the sensor and validate the repair.
   - The voltage for sensor 3 is at or near the voltage for sensor 2.

     Recheck the voltages at full-right position.

     Continue.

d) Turn the steering wheel fully to the right, and re-check the voltages from above.

Result

- The voltage for sensor 3 is significantly different from sensor 2.

  Sensor 3 is faulty.

  Replace the steering sensor box.

  See step 3 to calibrate the sensor and validate the repair.
- The voltage for sensor 3 is above 4.5 volts.

  Replace the steering sensor box.

  See step 3 to calibrate the sensor and validate the repair.
- The voltage for sensor 3 is at or near the voltage for sensor 2.

  Recheck the voltages at full-right position.

  Continue.

e) Turn the steering wheel fully to the left, and re-check the voltages from above.

Result

- The voltage for sensor 3 is significantly different from sensor 2.

  Sensor 3 is faulty.

  Replace the steering sensor box.

  See step 3 to calibrate the sensor and validate the repair.
- The voltage for sensor 3 is below 0.5 volts.

  Replace the steering sensor box.

  See step 3 to calibrate the sensor and validate the repair.
- The voltage for sensor 3 is at or near the voltage for sensor 2.

  The sensor is not at fault.

  See step 3 to calibrate the steering position sensors.

3. Check the sensor calibration.

a) Connect all the connectors.
b) Turn the battery disconnect switch to the on position.
c) Turn the key start switch to the on position.
d) Perform the sensor calibration.

Result

- The calibration was successful and SA 03 SPN 521473 FMI 12 is cleared.

  Stop.
- The calibration failed and only SA 03 SPN 521473 FMI 12 is being reported.

  The steering sensor box is likely at fault.

  Replace the steering sensor box.

  Repeat this adjustment step.

10.6.111.1 Steering wheel position sensors electrical schematic

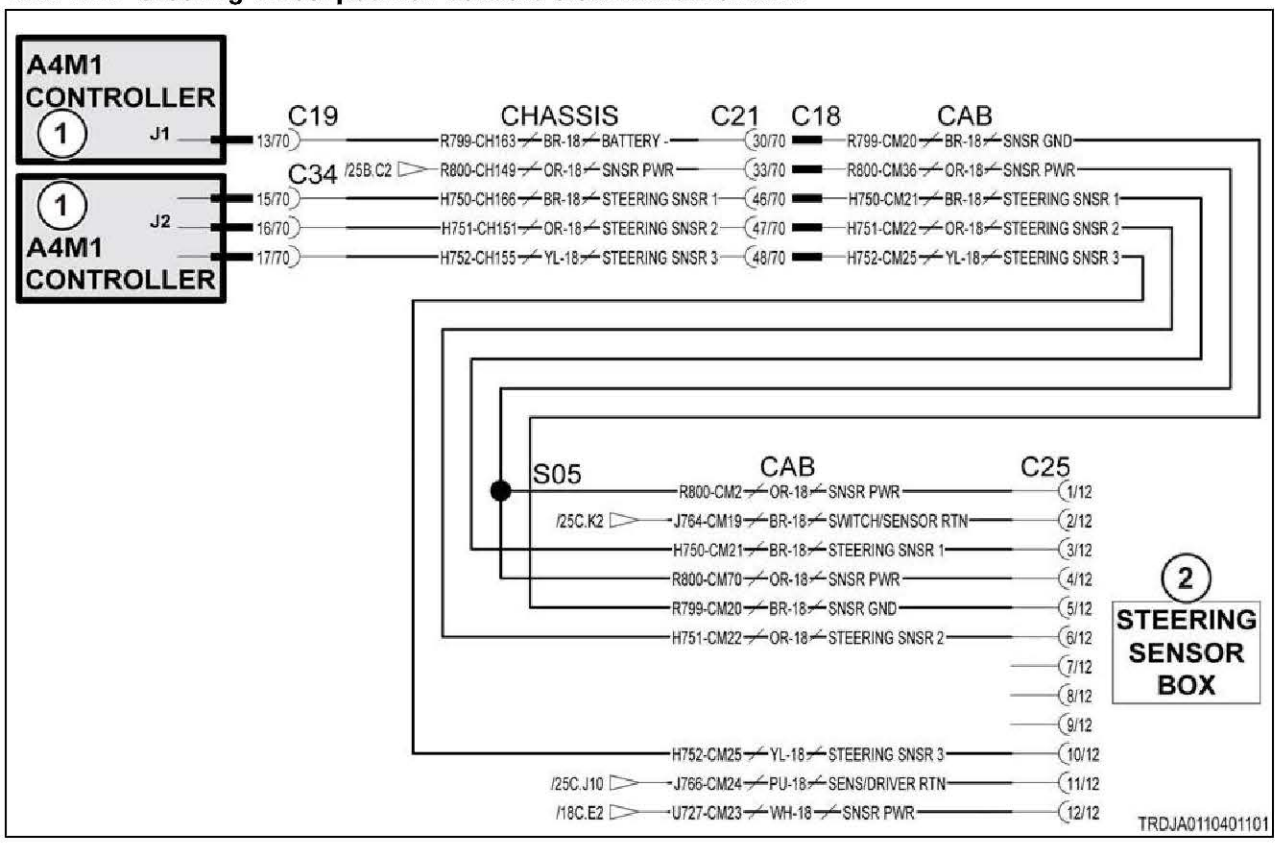

Fig. 266

Schematic legend		
Item	**Schematic term**	**Description**
1	A4M1 CONT	Transmission module
2	STEERING SENSOR BOX	Steering sensor box
--	STEERING SNSR	Steering sensor
--	SWITCH/SENSOR RTN	Switch/sensor return
--	SNSR GND	Sensor ground
--	SENS/DRIVER RTN	Sensor/driver return
--	SNSR PWR	Sensor power

10.6.112 Code SA 03 SPN 521473 FMI 13

The steering wheel position sensor 3 is out of calibration.

Steering wheel sensor 3 is reporting a position which is inconsistent with its calibrated range. The 3 steering sensors are redundant, but are calibrated together.

Diagnosis and solution

Calibrate the steering position sensors.

a) Turn the key start switch to the on position.

b) Follow the screen prompts and perform the sensor calibration.

Result

- The calibration failed and SA 03 SPN 521473 FMI 13 is being reported.

  Check for additional diagnostic codes and troubleshoot the sensor as described for that code.
- The calibration was successful and SA 03 SPN 521473 FMI 13 is cleared.

  Stop.

10.6.112.1 Steering wheel position sensors electrical schematic

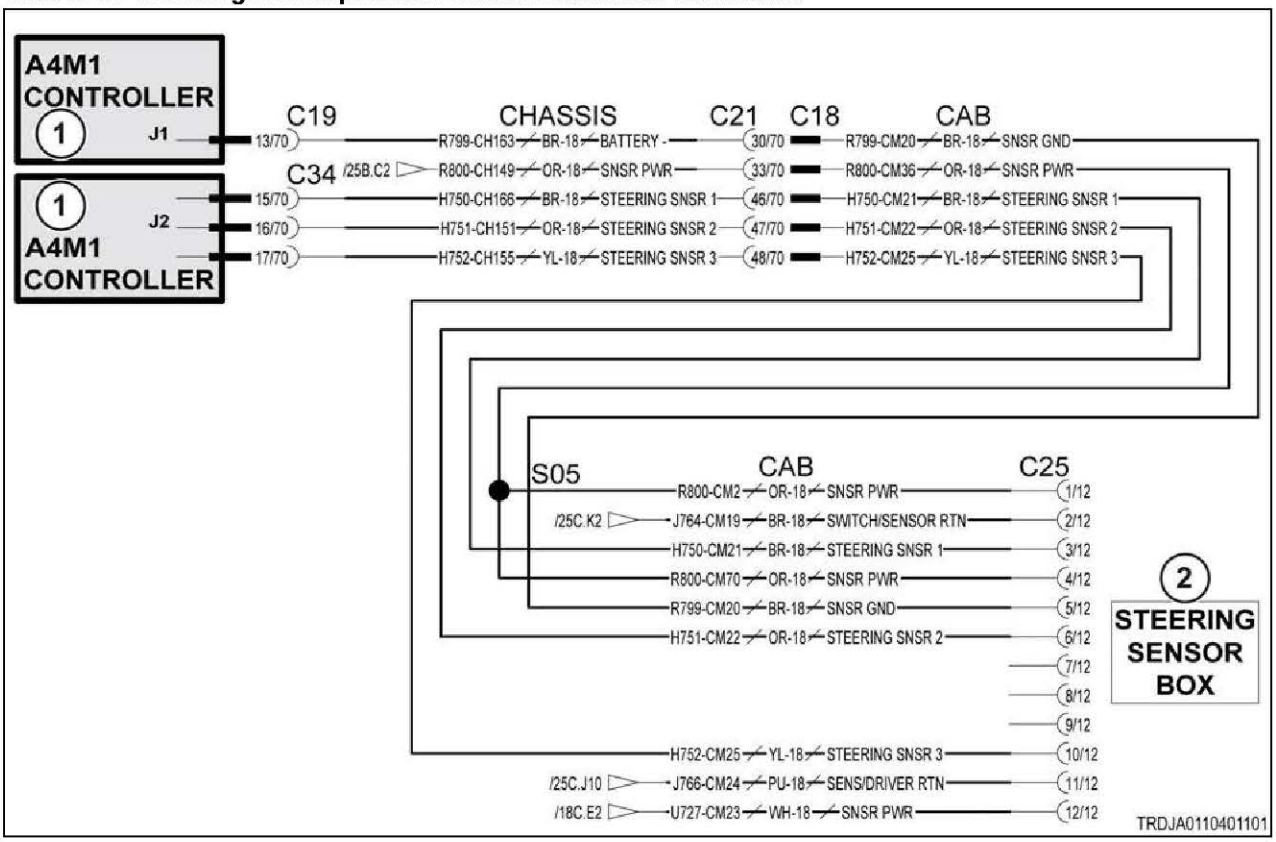

Fig. 267

Schematic legend		
Item	**Schematic term**	**Description**
1	A4M1 CONT	Transmission module
2	STEERING SENSOR BOX	Steering sensor box
--	STEERING SNSR	Steering sensor
--	SWITCH/SENSOR RTN	Switch/sensor return
--	SNSR GND	Sensor ground
--	SENS/DRIVER RTN	Sensor/driver return
--	SNSR PWR	Sensor power

10.6.113 Code SA 03 SPN 521475 FMI 02

Signal for the rear fender switches are erratic, intermittent or incorrect.

Diagnosis and solution

1. Check for a short-circuit.

a) Turn the key start switch to the off position.

b) Turn the battery disconnect switch to the off position.
c) Remove the key from the battery disconnect switch.
d) Disconnect the harness connectors at the transmission module, the left-hand and right-hand fender connectors.
e) Measure resistance between contact J1-64 and all contacts that are used in the machine harness connectors for ECM.

Result

Expected result - resistance is more than 5000 ohms.

Results:

- Yes - resistance is more than 5000 ohms.

  see step 2, page 10-525
- No - resistance is not more than 5000 ohms.

  Repair or replace the harness.

  see step 3, page 10-525

2. Check the unactuated operation of the fender hitch switches.
a) Turn the key start switch to the off position.
b) Turn the battery disconnect switch to the off position.
c) Remove the key from the battery disconnect switch.
d) Check the resistance between contact 2 and contact 4 of the switch.
e) Record the resistance.
f) Check the resistance between contact 2 and contact 1 of the switch.
g) Record the resistance.
h) Check the resistance between contact 2 and contact 3 of the switch.
i) Record the resistance.
j) Repeat the steps for the right-hand fender switch.

Result

Expected results: the resistance from contact 2 to contact 4 and contact 1 is more than 5000 ohms. The resistance from contact 2 to contact 3 is not more than 5 ohms.

Results:

- Yes - the resistance from contact 2 to contact 4 and contact 1 is more than 5000 ohms. The resistance from contact 2 to contact 3 is not more than 5 ohms.

  see step 3, page 10-525
- No - the resistance measurements from contact 2 to contact 4 and contact 1 are not more than 5000 ohms. The resistance from contact 2 to contact 3 is more than 5 ohms.

  see step 3, page 10-525

3. Check if the diagnostic code remains.
a) Check and clean the harness connector contacts.
b) Connect all the connectors.
c) Turn the battery disconnect switch to the on position.
d) Turn the key start switch to the on position.
e) Operate the machine at low idle.
f) Check if the diagnostic code remains.

Result

Expected result - the diagnostic code is not active.

Results:

- Yes - SPN 521475 FMI 2 is not active.

  Stop.
- No - SPN 521475 FMI 2 is active.

  Failure of the transmission module is possible but not common. Exit the procedure and do the procedure again. If the diagnostic code remains active, replace the module.

  Stop.

10.6.113.1 Rear hitch controls electrical schematic

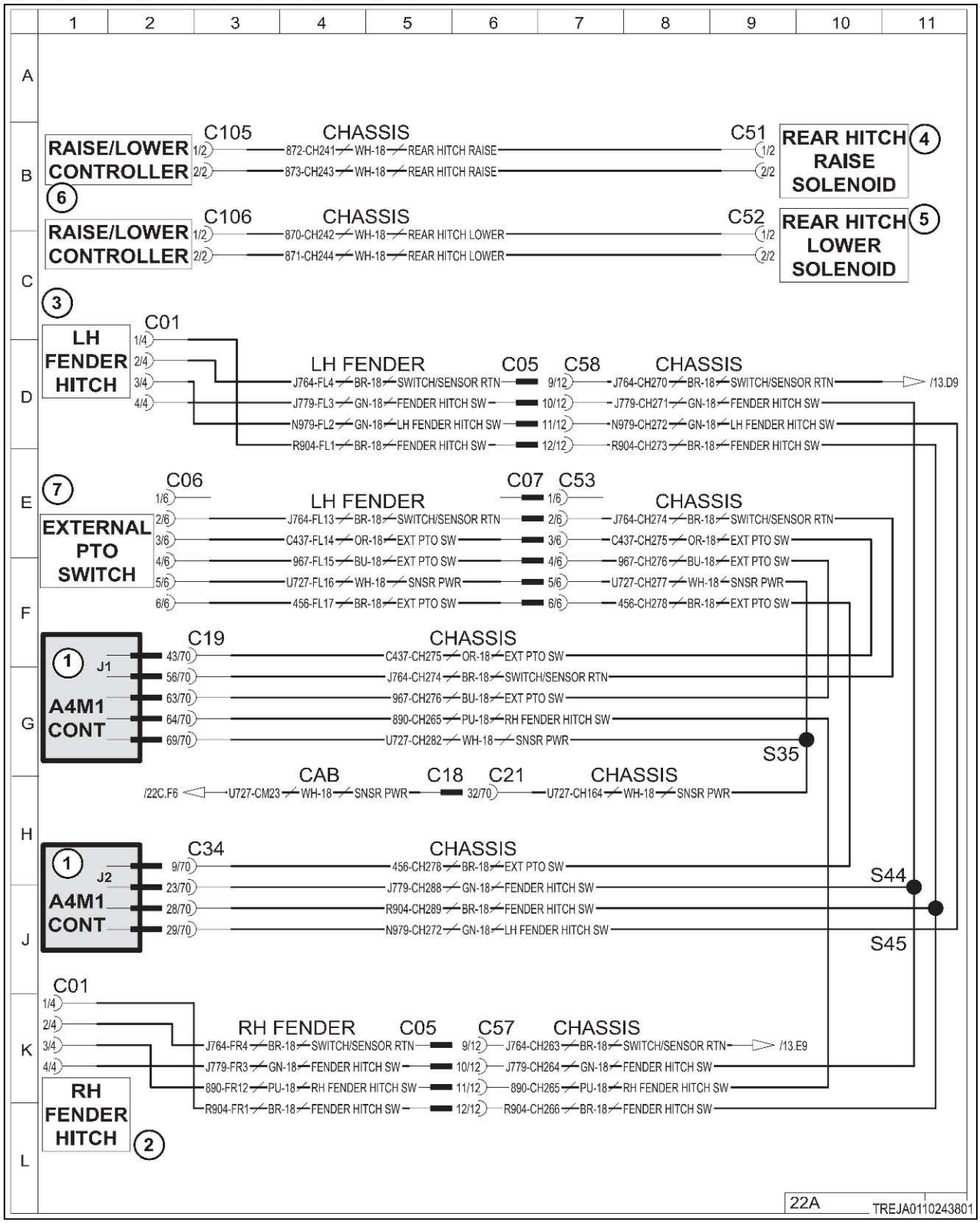

Fig. 268

Schematic legend		
Item	Schematic term	Description
1	A4M1 CONT	Transmission module
2	RH FENDER HITCH SWITCH	Right-hand fender hitch switch
3	LH FENDER HITCH SWITCH	Left-hand fender hitch switch
4	REAR HITCH RAISE SOLENOID	Rear hitch raise solenoid
5	REAR HITCH LOWER SOLENOID	Rear hitch lower solenoid
6	RAISE/LOWER CONTROLLER	Raise/lower controller
7	EXTERNAL PTO SWITCH	External PTO switch
--	HITCH FENDER SW LOWER	Hitch fender switch lower
--	HITCH FENDER SW RAISE	Hitch fender switch raise
--	HITCH FENDER SW COM	Hitch fender switch common

10.6.114 Code SA 03 SPN 521476 FMI 00

Rear hitch steer position sensor above normal operational range

Diagnosis and solution

1. Calibrate the hitch steering position sensor.

Result

Expected results - fault code not active.

Results:

- Yes - fault code is not active.

  Stop
- No - fault code is active.

2. Check for a short-circuit.

a) Turn the key start switch to the off position.
b) Turn the battery disconnect switch to the off position.
c) Remove the key from the battery disconnect switch.
d) Disconnect the harness connectors at the transmission module and the hitch steer position sensor.
e) Measure resistance between contact J1-25 and all contacts that are used in the machine harness connectors for ECM.

Result

Expected result - resistance is more than 5000 ohms.

Results:

- Yes - resistance is more than 5000 ohms.
- No - resistance is not more than 5000 ohms.

  Repair or replace the harness.

3. Check if the diagnostic code remains.

a) Check and clean the harness connector contacts.
b) Connect all the connectors.
c) Turn the battery disconnect switch to the on position.
d) Turn the key start switch to the on position.

e) Operate the machine at low idle.
f) Check if the diagnostic code remains.

Result

Expected result - the diagnostic code is not active.

Results:

- Yes - SPN 521476 FMI 00 is not active.

  Stop.
- No - SPN 521476 FMI 00 is active.

  Failure of the transmission module is possible but not common. Exit the procedure and do the procedure again. If the diagnostic code remains active, replace the module.

  Stop.

10.6.114.1 Implement oil filter bypass switch electrical schematic

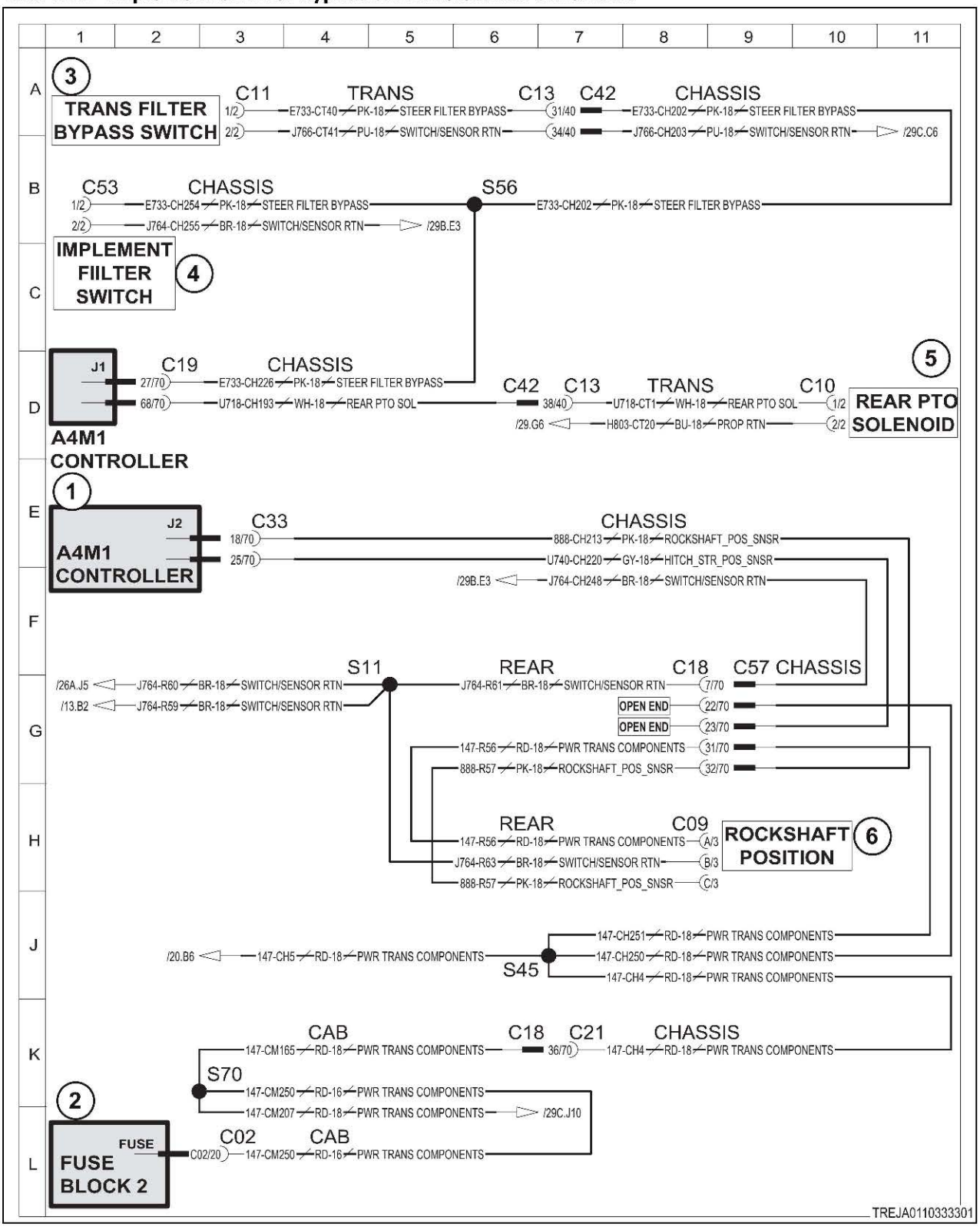

Fig. 269

Schematic legend		
Item	Schematic term	Description
1	A4M1 CONT	Transmission module
2	FUSE BLOCK 2	Fuse block 2
3	TRANS FILTER BYPASS SWITCH	Steering solenoid
4	IMPLEMENT FILTER SWITCH	Rear power take-off solenoid
5	REAR PTO SOLENOID	Rear PTO solenoid
6	ROCKSHAFT POSITION	Rockshaft position
--	CHASSIS	Chassis
--	REAR	Rear
--	PROP RTN	Proportional return
--	ON/OFF DRVR RTN	On/off driver return
--	ROCKSHAFT POSITION SENSOR	Rockshaft position sensor
--	STEERING FILTER BYPASS	Steering filter bypass
--	HITCH STR POS SNSR	Hitch steering position sensor
--	PWR TRANS COMPONENTS	Power to transmission components

10.6.115 Code SA 03 SPN 521476 FMI 01

Rear hitch steer position sensor below normal operational range .

Diagnosis and solution

1. Calibrate the hitch steering position sensor.

Result

Expected results - fault code not active.

Results:

- Yes - fault code is not active.

  Stop
- No - fault code is active.

2. Check the battery voltage.

a) Turn the battery disconnect switch to the on position.
b) Turn the key start switch to the on position.
c) Operate the machine at low idle.
d) Check voltage at battery posts.

Result

Expected results - voltage is 12 volts.

- Yes - voltage is 12 volts.
- No - voltage is not 12 volts.

  The charging system is bad.

  Repair or replace alternator.

3. Check the voltage at the cab bulk head.

a) Turn the battery disconnect switch to the on position.
b) Turn the key start switch to the on position.

c) Operate the machine at low idle.
d) Insert an probe in back of machine harness connector contact 36.

Result

Expected results - voltage is 12 volts.

- Yes - voltage is 12 volts.
- No - voltage is 12 volts.

4. Check the steering hitch position sensor power circuit for short circuit.
a) Turn the key start switch to the off position.
b) Turn the battery disconnect switch to the off position.
c) Remove the key from the battery disconnect switch.
d) Disconnect the harness connectors from the sensor and the fuse block .
e) Check resistance between contact A3 on sensor connector and contact C02 on the fuse block.

Result

Expected result - the resistance is more than 5000 ohms.

Results:

- Yes - the resistance is more than 5000 ohms.
- No - the resistance is not more than 5000 ohms.

  Repair or replace the harness.

5. Check the steering hitch position sensor circuit for short circuit.
a) Turn the key start switch to the off position.
b) Turn the battery disconnect switch to the off position.
c) Remove the key from the battery disconnect switch.
d) Disconnect the harness connectors from the sensor and the transmission module.
e) Check resistance between contact C3 on sensor connector and contact 25 on transmission module connector.

Result

Expected result - the resistance is more than 5000 ohms.

Results:

- Yes - the resistance is more than 5000 ohms.
- No - the resistance is not more than 5000 ohms.

  Repair or replace the harness.

6. Check if the diagnostic code remains.
a) Check and clean the harness connector contacts.
b) Connect all the connectors.
c) Turn the battery disconnect switch to the on position.
d) Turn the key start switch to the on position.
e) Operate the machine at low idle.
f) Check if the diagnostic code remains.

Result

Expected result - the diagnostic code is not active.

Results:

- Yes - SPN 521476 FMI 01 is not active.

  Stop.

- No - SPN 521476 FMI 01 is active.

  Failure of the transmission module is possible but not common. Exit the procedure and do the procedure again. If the diagnostic code remains active, replace the module.

  Stop.

10.6.115.1 Implement oil filter bypass switch electrical schematic

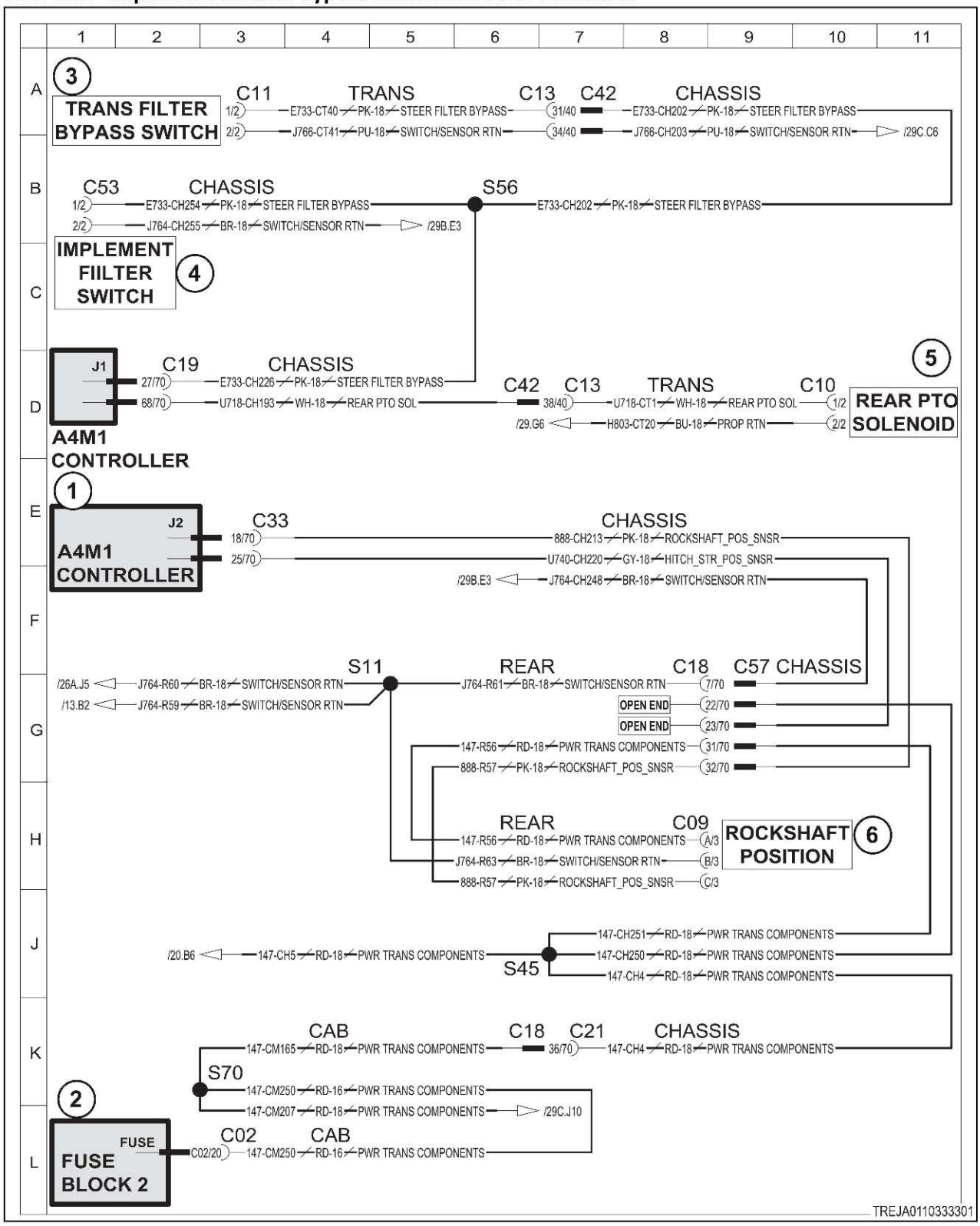

Fig. 270

Schematic legend		
Item	Schematic term	Description
1	A4M1 CONT	Transmission module
2	FUSE BLOCK 2	Fuse block 2
3	TRANS FILTER BYPASS SWITCH	Steering solenoid
4	IMPLEMENT FILTER SWITCH	Rear power take-off solenoid
5	REAR PTO SOLENOID	Rear PTO solenoid
6	ROCKSHAFT POSITION	Rockshaft position
--	CHASSIS	Chassis
--	REAR	Rear
--	PROP RTN	Proportional return
--	ON/OFF DRVR RTN	On/off driver return
--	ROCKSHAFT POSITION SENSOR	Rockshaft position sensor
--	STEERING FILTER BYPASS	Steering filter bypass
--	HITCH STR POS SNSR	Hitch steering position sensor
--	PWR TRANS COMPONENTS	Power to transmission components

10.6.116 Code SA 03 SPN 521476 FMI 08

The ECM has determined that the signal frequency or the signal pulse width is not within expected range for the rear hitch steer position sensor.

Diagnosis and solution

1. Check the hitch steering operation.

a) Turn the battery disconnect switch to the on position.

b) Turn the key start switch to the on position.

c) Operate and steer the hitch.

Result

Expected result: steering operation is correct.

Results:

- Yes - steering operation is correct.

  Stop.
- No - steering operation is not correct.

  Calibrate the hitch steering sensor .

d) Repeat the steering operation.

Result

Expected result:

Results:

- Yes - steering operation is correct.

  Stop.
- No - steering operation is not correct.

2. Check the signal circuit for a short circuit.

a) Turn the key start switch to the off position.
b) Turn the battery disconnect switch to the off position.
c) Remove the battery disconnect key.
d) Disconnect the sensor.
e) Disconnect the transmission connector.
f) Measure resistance between contact J1-25 and all contacts that are used in the machine harness connectors for the transmission module.

Result

Expected result: the resistance is more than 5000 ohms.

Results:

- Yes - the resistance is more than 5000 ohms.
- No - the resistance is not more than 5000 ohms.

  Repair or replace the machine harness.

3. Check if the diagnostic code remains.

a) Check and clean the harness connector contacts.
b) Connect all the connectors.
c) Turn the battery disconnect switch to the on position.
d) Turn the key start switch to the on position.
e) Operate the machine at low idle.
f) Check if the diagnostic code remains.

Result

Expected result: the diagnostic code is not active.

Results:

- Yes - SPN 521476 FMI 08 is not active.

  Stop.
- No - SPN 521476 FMI 08 is active.

  Failure of the transmission module is possible but not common. Exit the procedure and do the procedure again. If the diagnostic code remains active, replace the module.

  Stop.

10.6.116.1 Implement oil filter bypass switch electrical schematic

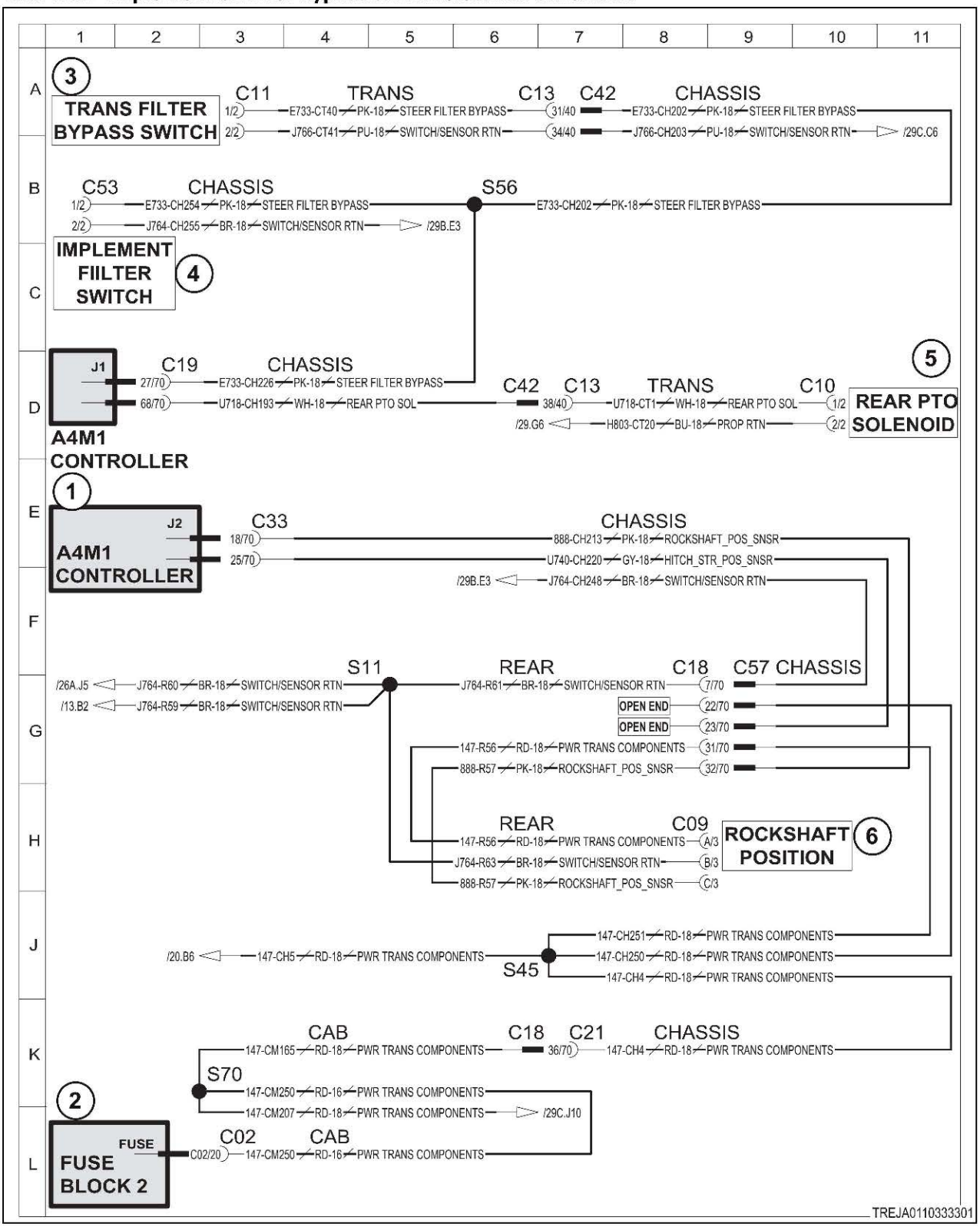

Fig. 271

Schematic legend		
Item	**Schematic term**	**Description**
1	A4M1 CONT	Transmission module
2	FUSE BLOCK 2	Fuse block 2
3	TRANS FILTER BYPASS SWITCH	Steering solenoid
4	IMPLEMENT FILTER SWITCH	Rear power take-off solenoid
5	REAR PTO SOLENOID	Rear PTO solenoid
6	ROCKSHAFT POSITION	Rockshaft position
--	CHASSIS	Chassis
--	REAR	Rear
--	PROP RTN	Proportional return
--	ON/OFF DRVR RTN	On/off driver return
--	ROCKSHAFT POSITION SENSOR	Rockshaft position sensor
--	STEERING FILTER BYPASS	Steering filter bypass
--	HITCH STR POS SNSR	Hitch steering position sensor
--	PWR TRANS COMPONENTS	Power to transmission components

10.6.117 Code SA 03 SPN 521476 FMI 13

Rear hitch steer position sensor out of calibration.

Diagnosis and solution

Check the hitch steering operation.

a) Turn the battery disconnect switch to the on position.
b) Turn the key start switch to the on position.
c) Operate and steer the hitch.

Result

Expected result - steering operation is correct.

Results:

- Yes - steering operation is correct.

  Stop
- No - steering operation is not correct.

  Calibrate the hitch steering sensor .

10.6.117.1 Implement oil filter bypass switch electrical schematic

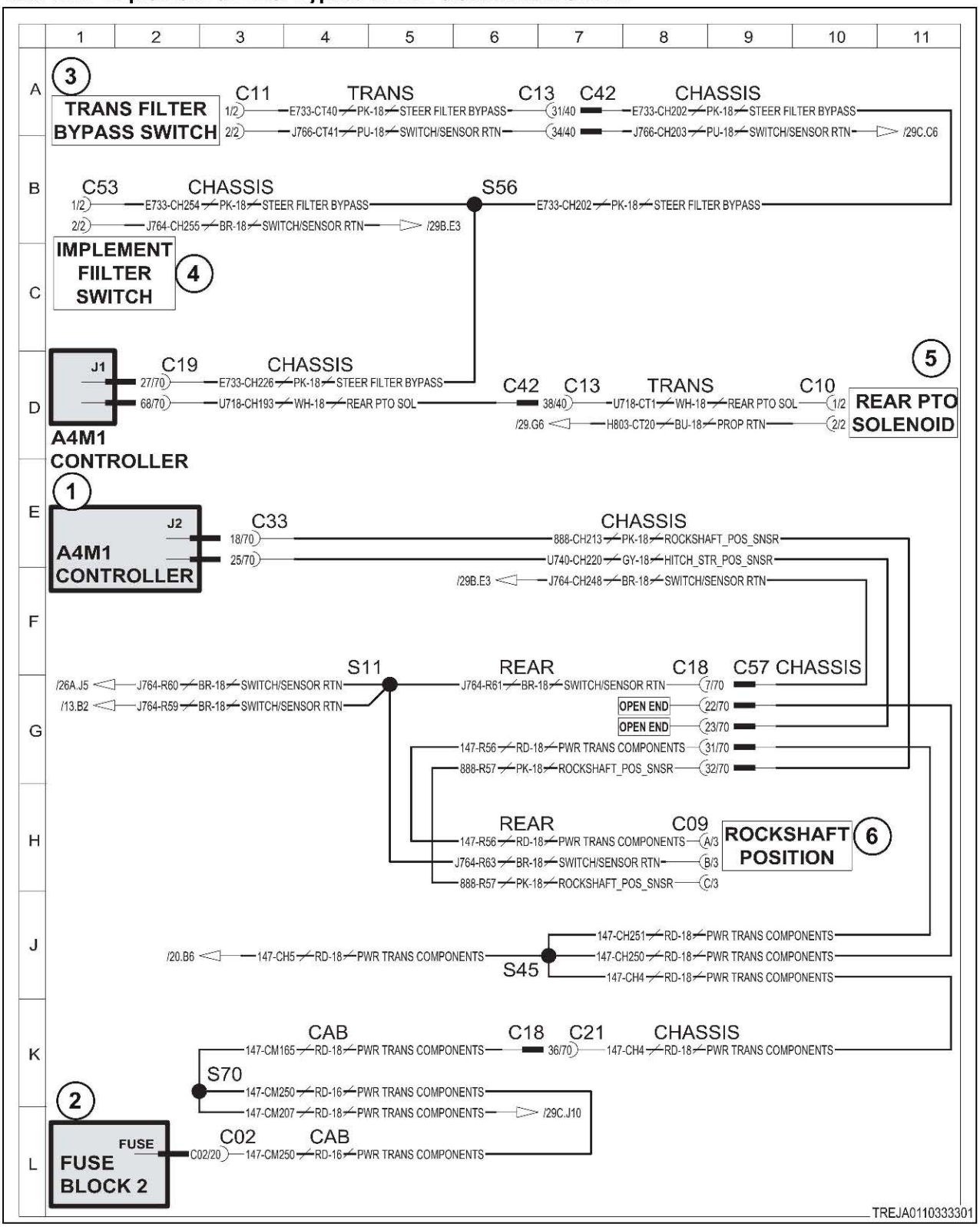

Fig. 272

Schematic legend		
Item	**Schematic term**	**Description**
1	A4M1 CONT	Transmission module
2	FUSE BLOCK 2	Fuse block 2
3	TRANS FILTER BYPASS SWITCH	Steering solenoid
4	IMPLEMENT FILTER SWITCH	Rear power take-off solenoid
5	REAR PTO SOLENOID	Rear PTO solenoid
6	ROCKSHAFT POSITION	Rockshaft position
--	CHASSIS	Chassis
--	REAR	Rear
--	PROP RTN	Proportional return
--	ON/OFF DRVR RTN	On/off driver return
--	ROCKSHAFT POSITION SENSOR	Rockshaft position sensor
--	STEERING FILTER BYPASS	Steering filter bypass
--	HITCH STR POS SNSR	Hitch steering position sensor
--	PWR TRANS COMPONENTS	Power to transmission components

10.6.118 Code SA 03 SPN 521760 FMI 03

Secondary steering solenoid circuit voltage is above normal.

The transmission module has detected voltage on the steering solenoid circuit when the solenoid was not commanded to be active. The most likely cause is a short circuit to battery power.

Diagnosis and solution.

1. Check for a short circuit at the transmission module.
- a) Turn the key start switch to the off position.
- b) Turn the battery disconnect switch to the off position.
- c) Disconnect the harness connector from the solenoid.
- d) Disconnect the J2 connector from the transmission module.
- e) Check the resistance from connector contact J2-6 to all other J2 connector contacts.

Result

- All resistance measurements are high (not near 0 ohms).

  See step 2 to check for a short at the transmission harness connectors.
- One or more resistance is at or near 0 ohms.

  Repair or replace the harness.

  See step 3 to validate the repair.

2. Check for a short circuit at the harness connectors.
- a) Disconnect the chassis harness from the transmission harness (located just aft ot the clutch solenoids on the transmission).
- b) Check the resistance from C13-1 to all other C13 contacts in the transmission harness.
- c) Check the resistance from contact C37-1 to all other C37 contacts in the chassis harness.

Result

- All resistance measurements are high (not near 0 ohms).

  The harnesses are not shorted.

  See step 3 to check if the error remains.
- One or more resistance is at ot near 0 ohms.

  Repair or replace the harness.

  See step 3 to validate the repair.

3. Check if the diagnostic code remains.

a) Check and clean the harness connector contacts.
b) Connect all the connectors.
c) Turn the battery disconnect switch to the on position.
d) Turn the key start switch to the on position.
e) Operate the machine at low idle.
f) Check if the diagnostic code remains.

Result

- SPN 521760 FMI 03 is not active.

  Stop.
- SPN 521760 FMI 03 is active.

  Failure of the transmission module is possible but not common. Exit the procedure and do the procedure again. If the diagnostic code remains active, replace the module.

10.6.118.1 Implement oil filter bypass switch electrical schematic

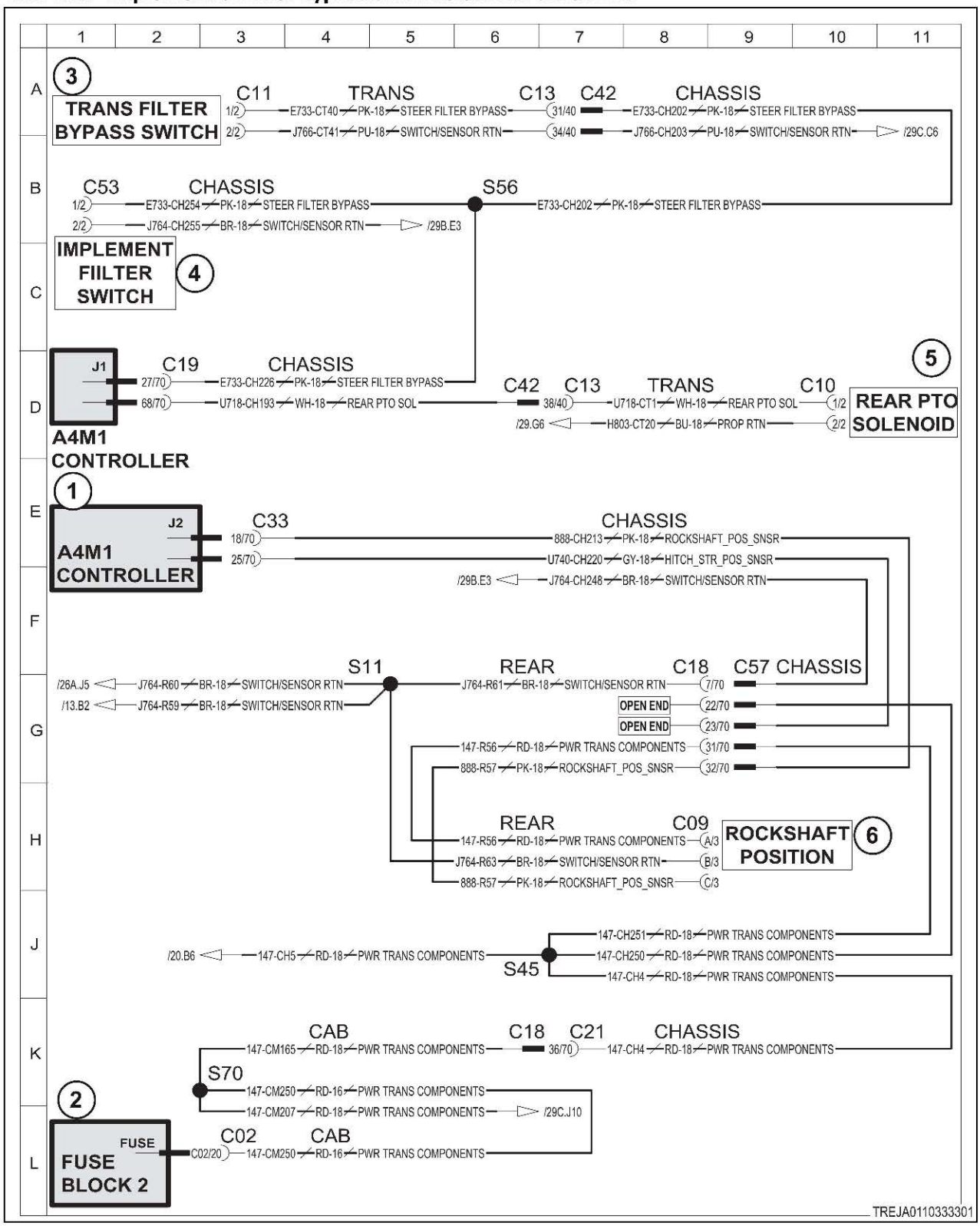

Fig. 273

Schematic legend		
Item	**Schematic term**	**Description**
1	A4M1 CONT	Transmission module
2	FUSE BLOCK 2	Fuse block 2
3	TRANS FILTER BYPASS SWITCH	Steering solenoid
4	IMPLEMENT FILTER SWITCH	Rear power take-off solenoid
5	REAR PTO SOLENOID	Rear PTO solenoid
6	ROCKSHAFT POSITION	Rockshaft position
--	CHASSIS	Chassis
--	REAR	Rear
--	PROP RTN	Proportional return
--	ON/OFF DRVR RTN	On/off driver return
--	ROCKSHAFT POSITION SENSOR	Rockshaft position sensor
--	STEERING FILTER BYPASS	Steering filter bypass
--	HITCH STR POS SNSR	Hitch steering position sensor
--	PWR TRANS COMPONENTS	Power to transmission components

10.6.119 Code SA 03 SPN 521760 FMI 05

Secondary steering solenoid current is below normal.

The transmission module has detected an open circuit in the solenoid circuit. The most likely cause is a disconnected or faulty solenoid.

Diagnosis and solution

1. Check the solenoid coil resistance.
- a) Turn the key start switch to the off position.
- b) Turn the battery disconnect switch to the off position.
- c) Disconnect the secondary steering solenoid from the harness.
- d) Check the resistance between contacts 1 and 2 of the solenoid.

Result

- The resistance is between 5 and 10 ohms.

  The solenoid is not the fault.

  See step 2 to check for open circuit.
- The resistance is above 10 ohms.

  Replace the solenoid.

  See step 3 to validate the repair.

2. Check the harness for an open circuit.
- a) Install a shorting jumper between contacts 1 and 2 of the solenoid connector.
- b) Disconnect the J2 harness connector from the transmission module.
- c) Check the resistance between contacts J2-6 and J2-8 on the transmission module connector.

Result

- The resistance is at or near 0 ohms.

  The harness is not open.

  Remove the shorting jumper.

  See step 3 to check if the error code is still present.
- The resistance is high (not near 0 ohms).

  Repair or replace the harness.

  See step 3 to validate the repair.

3. Check if the diagnostic code remains.

a) Check and clean the harness connector contacts.
b) Connect all the connectors.
c) Turn the battery disconnect switch to the on position.
d) Turn the key start switch to the on position.
e) Operate the machine at low idle.
f) Check if the diagnostic code remains.

Result

- SPN 521760 FMI 05 is not active.

  Stop.
- SPN 521760 FMI 05 is active.

  Failure of the transmission module is possible but not common. Exit the procedure and do the procedure again. If the diagnostic code remains active, replace the module.

  Stop.

10.6.119.1 Implement oil filter bypass switch electrical schematic

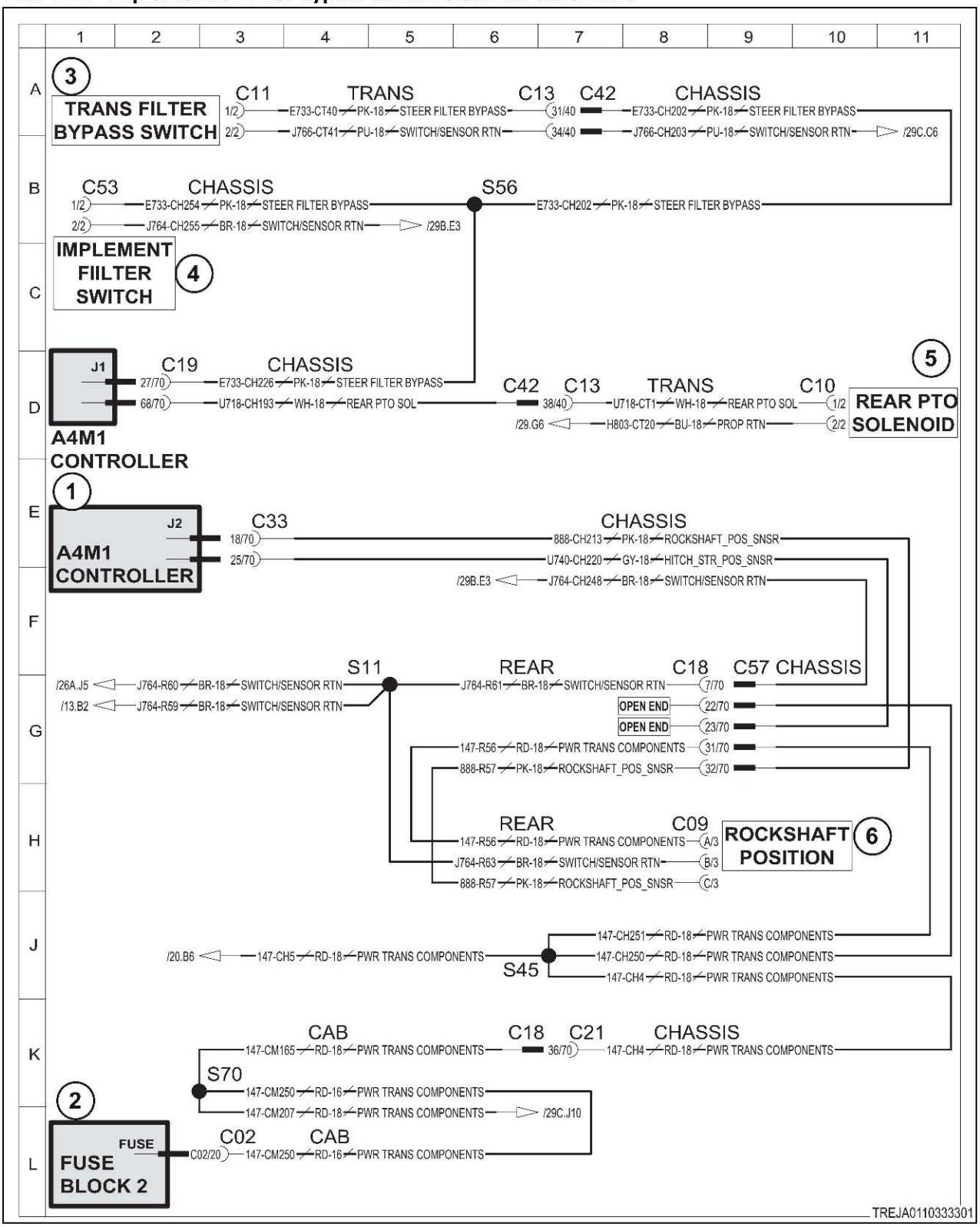

Fig. 274

Schematic legend		
Item	**Schematic term**	**Description**
1	A4M1 CONT	Transmission module
2	FUSE BLOCK 2	Fuse block 2
3	TRANS FILTER BYPASS SWITCH	Steering solenoid
4	IMPLEMENT FILTER SWITCH	Rear power take-off solenoid
5	REAR PTO SOLENOID	Rear PTO solenoid
6	ROCKSHAFT POSITION	Rockshaft position
--	CHASSIS	Chassis
--	REAR	Rear
--	PROP RTN	Proportional return
--	ON/OFF DRVR RTN	On/off driver return
--	ROCKSHAFT POSITION SENSOR	Rockshaft position sensor
--	STEERING FILTER BYPASS	Steering filter bypass
--	HITCH STR POS SNSR	Hitch steering position sensor
--	PWR TRANS COMPONENTS	Power to transmission components

10.6.120 Code SA 03 SPN 521760 FMI 06

Secondary steering solenoid current is above normal.

The hitch elevation switches consist of a pair of momentary contacts to manually raise or lower the hitch. Additionally, there is a switch-pair located on each fender, and these switch-pairs are connected in parallel. The mostly likely cause for the error is that one of the switches is fused, and the transmission module detects both raise and lower commands simultaneously.

Diagnosis and solution

1. Check for outward signs that one of the switches is stuck.

a) Manually actuate both right fender and left fender switches.

- Press and release the hitch raise button.
- Press and release the hitch lower button.
- Repeat for both right and left fender switch-pairs.

Result

When released, the button should return to its relaxed, extended position.

- One or more buttons did not return to its relaxed position when released.

  Replace the switch.

  See step 6 to validate the repair.
- All of the switches appeared to operate correctly.

  See step 2 to check the electrical operation of the switches and harness.

2. Check for short circuit at the transmission module.

a) Turn the key start switch to the off position.
b) Turn the battery disconnect switch to the off position.
c) Disconnect the J1 harness connector from the transmission module.
d) Check resistance between contacts J1-21 and J1-23 at the transmission module harness connector.

e) Check resistance between contacts J1-21 and J1-28 at the transmission module harness.

Result

- Neither resistance measurement was at or near 0 ohms (not short circuited).

  The switches are not likely at fault.

  See step 3 to check for short between signal wires.
- Either resistance measurement was at or near 0 ohms.

  Make note of which contacts indicated short.

  See step 4 to isolate right from left switches.

3. Check for short between signal wires.

a) Check the resistance between contacts J1-23 and J1-28 at the transmission module harness connector.

Result

- The resistance is at or near 0 ohms.

  One of the harnesses is shorted.

  See step 5 to isolate left and right fender harnesses.
- The resistance is high (not near 0 ohms).

  See step 6 to check if the error code has cleared.

4. Isolate right and left switches.

a) While monitoring the resistance of the short circuit detected in step 2, disconnect the right fender switch.

Result

- The short circuit cleared (resistance rose).

  The right fender switch is at fault.

  Replace the switch.

  See step 6 to validate the repair.
- The short circuit did not clear (resistance remained at or near 0 ohms).

  Leave the right switch disconnected.

  Continue to the left switch.

b) While monitoring the resistance of the short circuit detected in step 2, disconnect the left fender switch.

Result

- The short circuit cleared (resistance rose).

  The left fender switch is at fault.

  Replace the switch.

  See step 6 to validate the repair.
- The short circuit did not clear (resistance remained at or near 0 ohms).

  One of the harnesses is shorted.

  See step 5 to isolate the right and left fender harnesses.

5. Isolate the right and left fender harnesses.

a) While monitoring the resistance of the short circuit detected above (either in step 2 or step 3), disconnect the right fender harness from the chassis harness.

Result

- The short circuit cleared (resistance rose).

  The right fender harness is at fault.

  Repair or replace the harness.

  See step 6 to validate the repair.
- The short circuit did not clear (resistance remained at or near 0 ohms).

  Leave the right harnesses disconnected.

  Continue to the left harness.

b) While monitoring the resistance of the short circuit detected above (either in step 2 or step 3), disconnect the left fender harness from the chassis harness.

Result

- The short circuit cleared (resistance rose).

  The left fender harness is at fault.

  Repair or replace the harness.

  See step 6 to validate the repair.
- The short circuit did not clear (resistance remained at or near 0 ohms).

  The chassis harness is at fault.

  Repair or replace the chassis harness.

  See step 6 to validate the repair.

6. Check if the diagnostic code remains.

a) Inspect and clean the harness connector contacts.
b) Connect all connectors and switches.
c) Turn the battery disconnect switch to the on position.
d) Turn the key start switch to the on position.
e) Operate both right and left fender switches (not at the same time).
f) Check if the diagnostic code remains.

Result

- SPN 3454 FMI 02 is not active.

  Stop.
- SPN 3454 FMI 02 is active.

  Failure of the transmission module is possible but not common. Exit the procedure and do the procedure again. If the diagnostic code remains active, replace the module.

  Stop.

10.6.120.1 Implement oil filter bypass switch electrical schematic

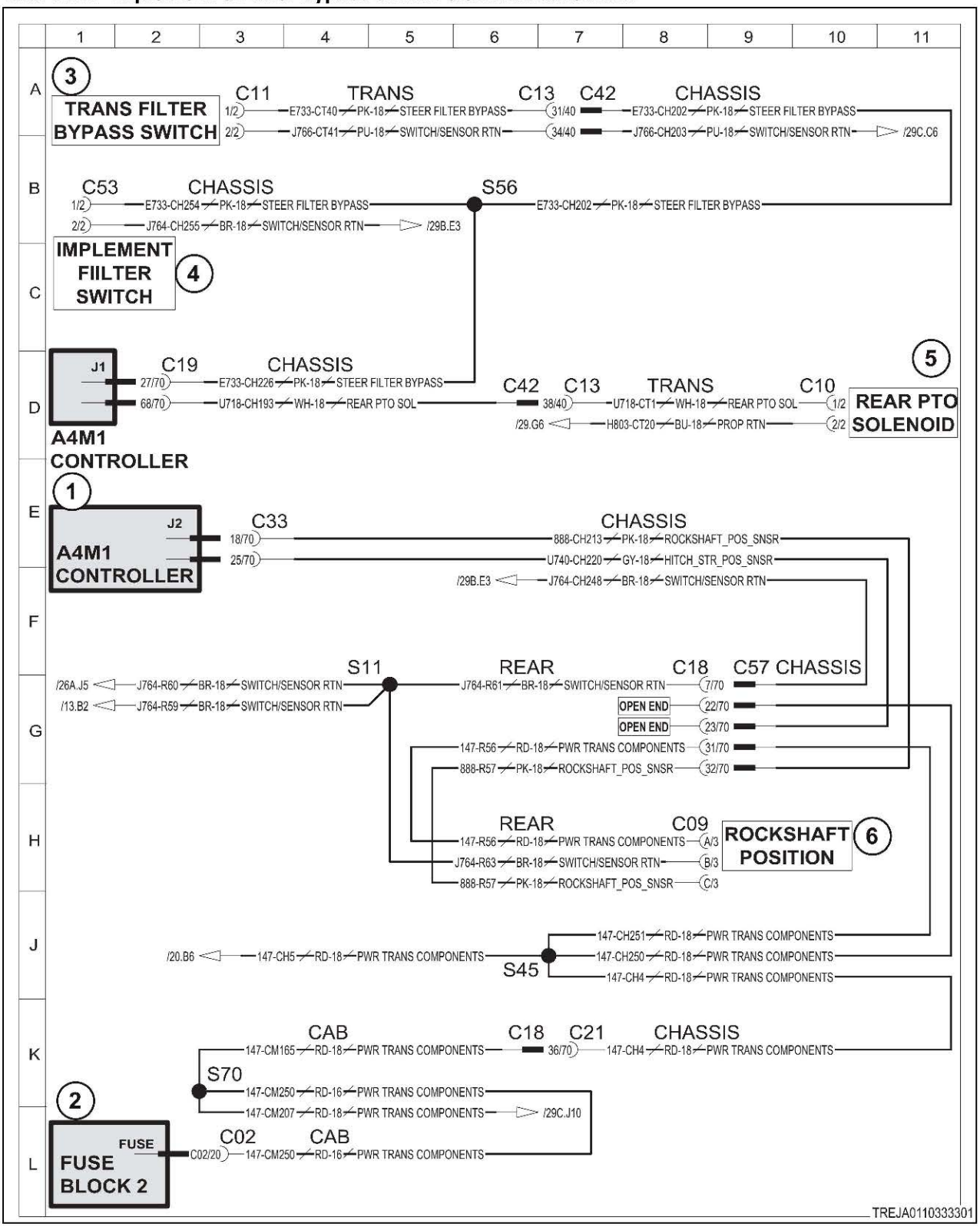

Fig. 275

Schematic legend		
Item	**Schematic term**	**Description**
1	A4M1 CONT	Transmission module
2	FUSE BLOCK 2	Fuse block 2
3	TRANS FILTER BYPASS SWITCH	Steering solenoid
4	IMPLEMENT FILTER SWITCH	Rear power take-off solenoid
5	REAR PTO SOLENOID	Rear PTO solenoid
6	ROCKSHAFT POSITION	Rockshaft position
--	CHASSIS	Chassis
--	REAR	Rear
--	PROP RTN	Proportional return
--	ON/OFF DRVR RTN	On/off driver return
--	ROCKSHAFT POSITION SENSOR	Rockshaft position sensor
--	STEERING FILTER BYPASS	Steering filter bypass
--	HITCH STR POS SNSR	Hitch steering position sensor
--	PWR TRANS COMPONENTS	Power to transmission components

10.7 05 Armrest module

10.7.1 Code SA 00 SPN 91 FMI 08

The decelerator pedal position sensor is not correct.

Diagnosis and solution

1. Check sensor voltages.
a) Leave the sensor connected.
b) Turn the battery disconnect switch to the on position.
c) Check the voltage between contacts 1 and 2 of the sensor connector.

Result

- Voltage is not at or near 12 volts.

  Replace fuse-5 of fuse block 2.

  See step 2 to validate the repair.
- Voltage is 12 volts.

  Continue

d) Check the voltage between contacts 2 and 3 while moving the pedal through its range of motion.

Result

- The voltage changes smoothly as the pedal is moved.

  See step 2 to check if the error persists.
- The voltage changes erratically as the pedal moves.

  Replace the sensor.

  Follow the prompts on the machine management center to calibrate the sensor.

  See step 2 to validate the repair.

2. Check if the diagnostic code remains.
a) Inspect and clean the harness connector contacts.
b) Connect all the connectors.
c) Turn the battery disconnect switch to the on position.
d) Turn the key start switch to the on position.
e) Operate the machine at low idle.
f) Check if the diagnostic code remains.

Result

- SPN 91 FMI 08 is not active.

  Stop.
- SPN 91 FMI 08 is active.

  Failure of the module is possible but not common. Exit the procedure and do the procedure again. If the diagnostic code remains active, replace the module.

  Stop.

10.7.1.1 Decelerator pedal electrical schematic

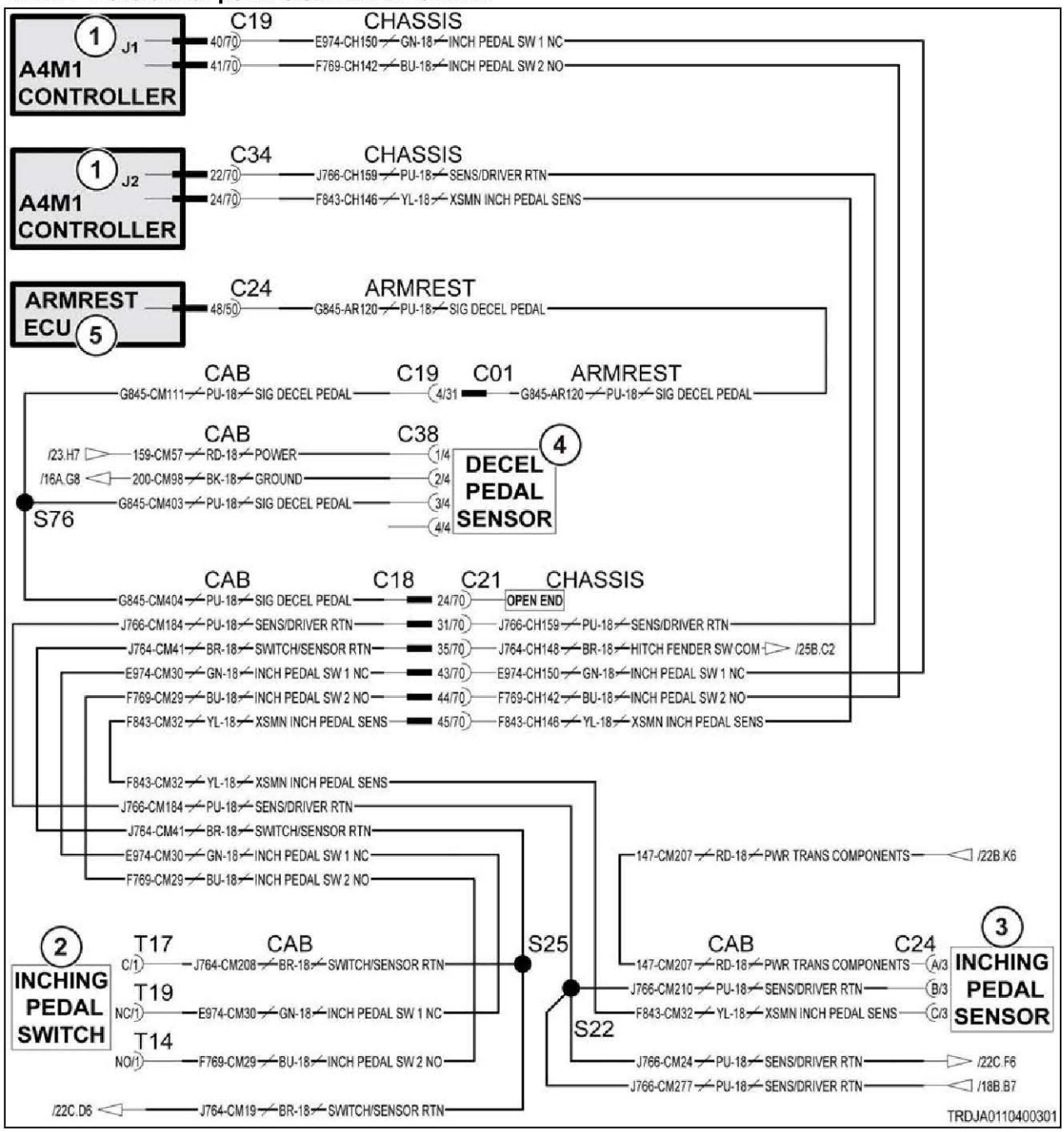

Fig. 276

Schematic legend		
Item	**Schematic term**	**Description**
1	A4M1 CONT	Transmission module
2	INCHING PEDAL SWITCH	Inching pedal switch
3	INCHING PEDAL SENSOR	Inching pedal sensor
4	DECEL PEDAL SENSOR	Decelerator pedal sensor
5	ARMREST ECU	Armrest module
--	XMSN INCH PEDAL SENS	Transmission inching pedal sensor

Schematic legend		
Item	Schematic term	Description
--	HITCH FENDER SW COM	Hitch fender switch common
--	SENS/DRIVER RTN	Sensor/driver return
--	INCH PEDAL SW 1 NC	Inching pedal switch 1 normally closed
--	INCH PEDAL SW 2 NO	Inching pedal switch 2 normally open
--	SIG DECEL PEDAL	Signal deceleration pedal
--	SWITCH/SENSOR RTN	Switch/sensor return
--	PWR TRANS COMPONENTS	Power transmission components

10.7.2 Code SA 00 SPN 91 FMI 13

The decelerator pedal position sensor requires calibration.

Diagnosis and solution

Check the sensor adjustment and/or calibration.

a) Turn the battery disconnect switch to the on position.
b) Turn the key start switch to the on position.
c) Do the sensor adjustment procedure and/or calibrate the sensor.
d) Check for active diagnostic codes.

Result

Expected result - SPN 91 FMI 13 is not active.

Results:

- Yes - SPN 91 FMI 13 is not active.

  Stop.
- No - SPN 91 FMI 13 is active.

  Failure of the module is possible but not common. Exit the procedure and do the procedure again. If the diagnostic code remains active, replace the module.

  Stop.

10.7.2.1 Decelerator pedal electrical schematic

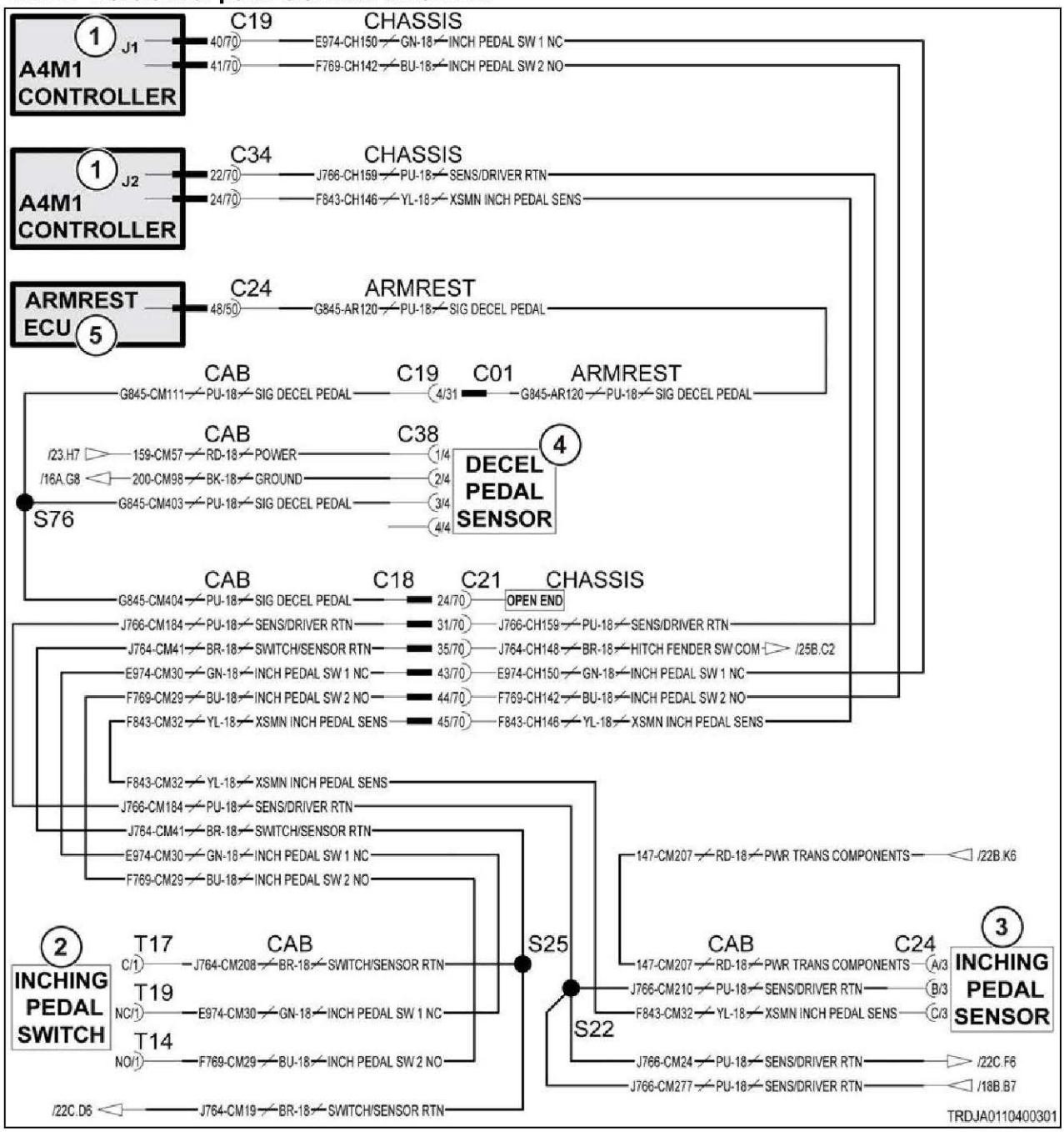

Fig. 277

Schematic legend		
Item	**Schematic term**	**Description**
1	A4M1 CONT	Transmission module
2	INCHING PEDAL SWITCH	Inching pedal switch
3	INCHING PEDAL SENSOR	Inching pedal sensor
4	DECEL PEDAL SENSOR	Decelerator pedal sensor
5	ARMREST ECU	Armrest module
--	XMSN INCH PEDAL SENS	Transmission inching pedal sensor

Schematic legend		
Item	Schematic term	Description
--	HITCH FENDER SW COM	Hitch fender switch common
--	SENS/DRIVER RTN	Sensor/driver return
--	INCH PEDAL SW 1 NC	Inching pedal switch 1 normally closed
--	INCH PEDAL SW 2 NO	Inching pedal switch 2 normally open
--	SIG DECEL PEDAL	Signal deceleration pedal
--	SWITCH/SENSOR RTN	Switch/sensor return
--	PWR TRANS COMPONENTS	Power transmission components

10.7.3 Code SA 05 SPN 601 FMI 02

Power management switch signal is erratic, intermittent, or not correct.

The switch is a momentary double-pole, double-throw (DPDT) type switch, except the "common" terminal is the data output instead of a power source. The 4 other contacts are connected to 3.33-volt power and 1.66-volt power. Operating the switch selects one of these voltages for the signal output. These 2 power circuits are shared by several other function switches on the armrest. This knowledge can aid in diagnosing the fault.

Diagnosis and solution

1. Check the function of upstream and downstream switches that share power circuits.

a) Turn the key start switch to the on position.
b) Operate the rear PTO switch in both directions.
c) Operate the raise work switch in both directions.
d) Check for additional error codes.

Result

- SA 05 SPN 1894 FMI 02 (PTO) error is reported.

  Focus further examination on the power circuits between the rear PTO switch and the armrest controller.

  See step 2 to check for loose connections.
- SA 05 SPN 521474 FMI 02 (rear hitch) is reported, but not a PTO error.

  Focus further examination on the power circuits between the power management switch and the PTO switch.

  See step 2 to check for loose connections.
- No additional error codes are reported.

  The power circuits are not suspect.

  Focus further examination on the switch signal output.

  See step 2 to check for loose connections.

2. Inspect all harness and switch connections.

a) Turn the key start switch to the off position.
b) Turn the battery disconnect switch to the off position.
c) Open the top of the armrest console.
d) Inspect and clean all connectors and connector contacts:

- Look for bent or worn pins.
- Look for deformed or oversized sockets.
- Look for corrosion on the pins and sockets. Corrosion is a sign of a loose connection.

- Look for signs of overheating. Overheating is a sign of a poor connection, and can further loosen the pin or socket mount. The whole connector body should be replaced.

e) Make sure to inspect the circuits identified in step 1 as they pass through the following connector locations:

- Switch signal at the armrest ECU C24-25.
- All contacts at the power management switch.
- The 1.66V and 3.33V power signals as they pass through the following switches:

  Roading lock SW

  Rear PTO SW

  Creeper switch

  Auto Guide switch

  Engine A/B switch

  Shift Handle

  Armrest ECU C24-8 (3.33V) and C24-10 (1.66V)

f) Repair or replace any connector or harness found faulty.

Result

- No faulty contacts were found.

  See step 3 to check the switch function.
- Faulty contacts were found and repaired.

  See step 4 to validate the repair.

3. Check the switch function.

a) Disconnect the power management switch.

b) Check resistance between contacts 2 & 1 and 2 & 4, as you operate the switch from neutral, on, and off.

- In the neutral-position, no contacts should have continuity.
- In the on-position, contacts 2 and 4 should have continuity.
- In the off-position, contacts 2 and 1 should have continuity.

Result

- Continuity checks are correct.

  See step 4 to check if the error persists.
- Continuity checks are incorrect.

  Replace the switch.

  See step 4 to validate the repair.

4. Check if the fault code remains.

a) Inspect and clean the harness connector contacts.

b) Connect all the connectors.

c) Turn the battery disconnect switch to the on position.

d) Turn the key start switch to the on position.

e) Operate the machine at low idle.

f) Check if the fault code remains.

Result

- SPN 601 FMI 02 is not active.

  Stop.

- SPN 601 FMI 02 is active.

  Failure of the armrest module is possible but not common. Exit the procedure and do the procedure again. If the fault code remains active, replace the armrest module.

  Stop.

10.7.3.1 Power management switch electrical schematic

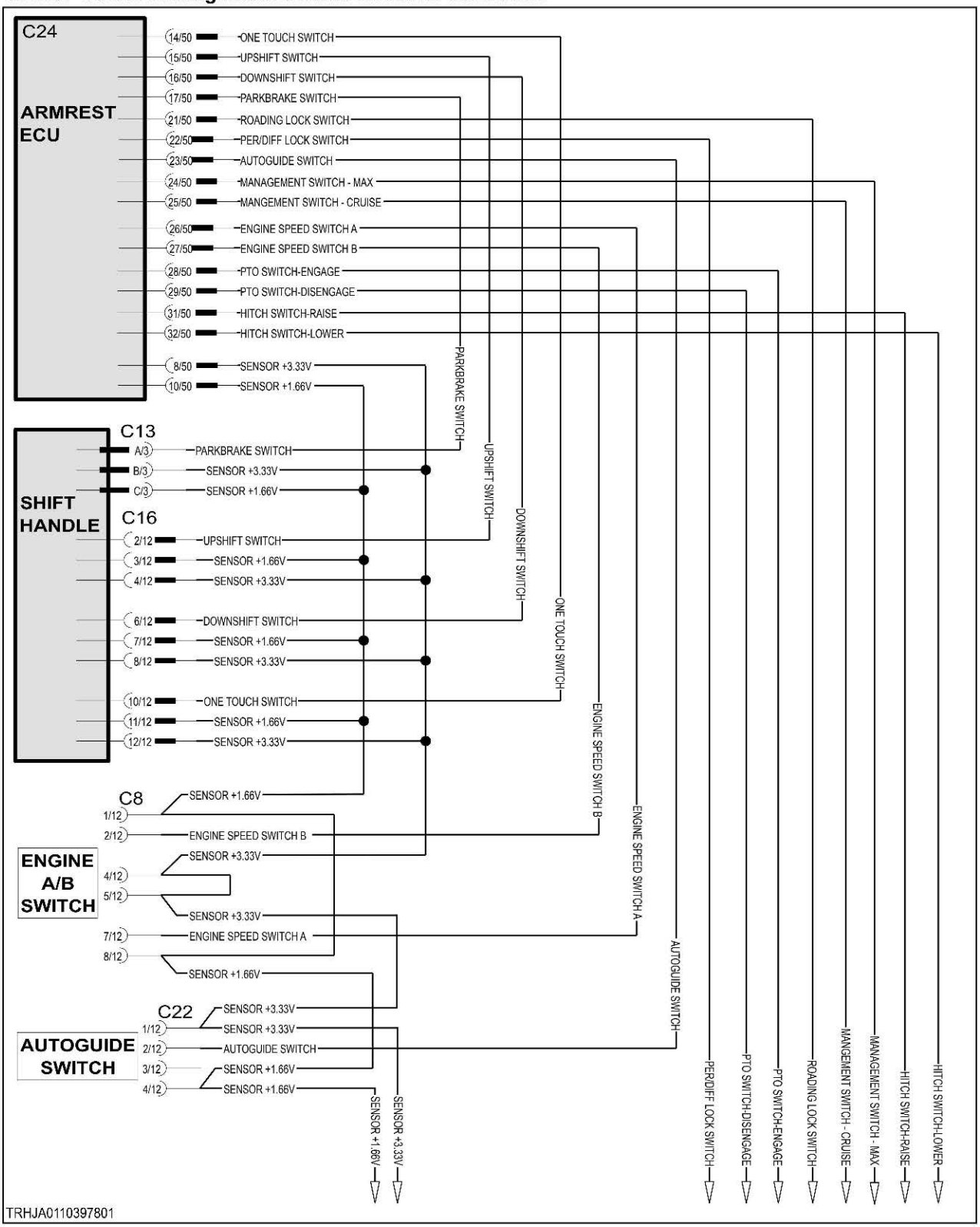

Fig. 278

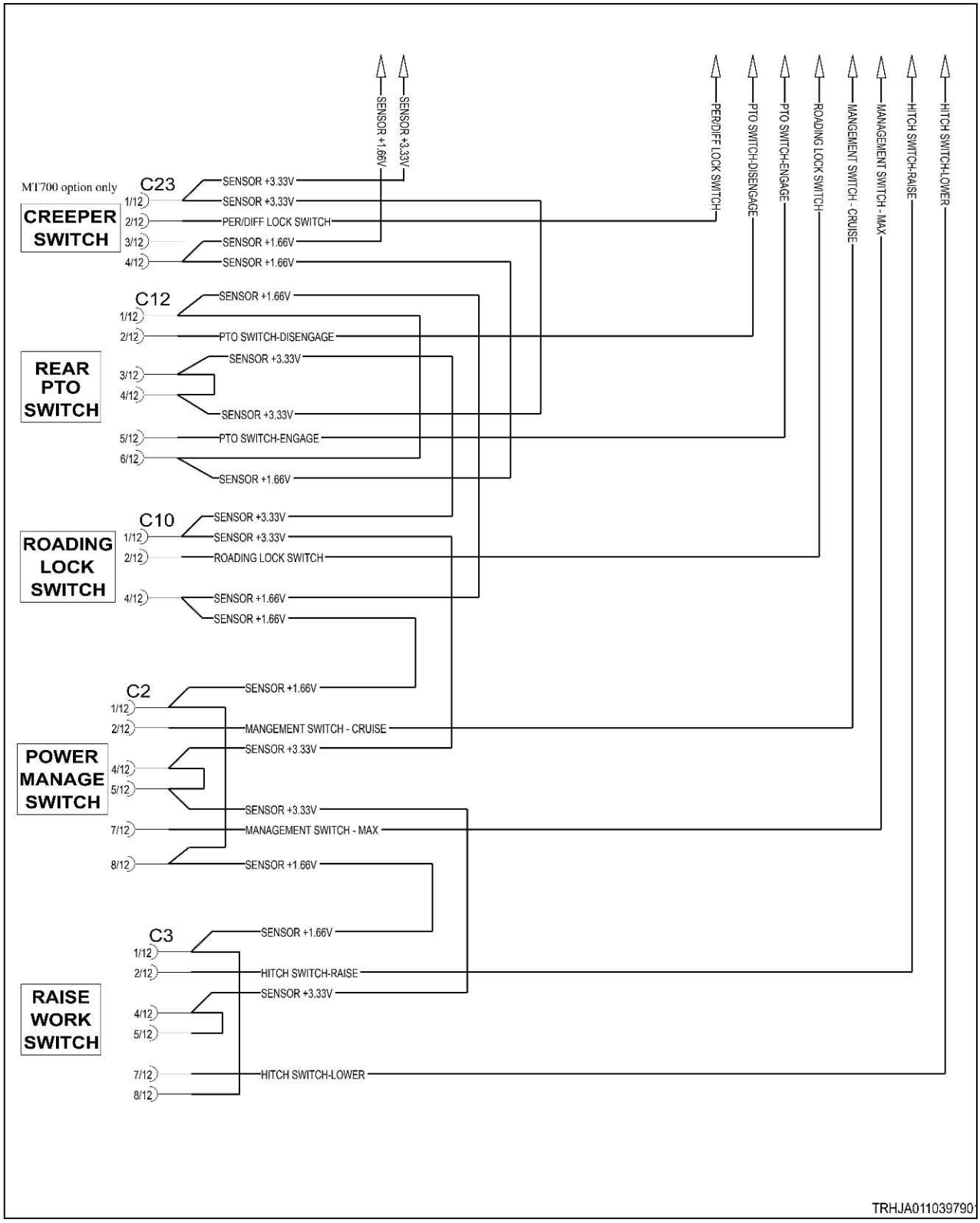
SENSOR +1.66V
SENSOR +3.33V
PER/DIFF LOCK SWITCH
PTO SWITCH-DISENGAGE
PTO SWITCH-ENGAGE
ROADING LOCK SWITCH
MANGEMENT SWITCH - CRUISE
MANAGEMENT SWITCH - MAX
HITCH SWITCH-RAISE
HITCH SWITCH-LOWER
MT700 option only
CREEPER SWITCH
C23
1/12 SENSOR +3.33V
SENSOR +3.33V
2/12 PER/DIFF LOCK SWITCH
3/12 SENSOR +1.66V
4/12 SENSOR +1.66V
C12
1/12 SENSOR +1.66V
2/12 PTO SWITCH-DISENGAGE
REAR PTO SWITCH
3/12 SENSOR +3.33V
4/12
SENSOR +3.33V
5/12 PTO SWITCH-ENGAGE
6/12
SENSOR +1.66V
C10
1/12 SENSOR +3.33V
ROADING LOCK SWITCH
SENSOR +3.33V
2/12 ROADING LOCK SWITCH
4/12 SENSOR +1.66V
SENSOR +1.66V
C2
1/12 SENSOR +1.66V
2/12 MANGEMENT SWITCH - CRUISE
POWER MANAGE SWITCH
SENSOR +3.33V
4/12
5/12
SENSOR +3.33V
7/12 MANAGEMENT SWITCH - MAX
8/12 SENSOR +1.66V
C3
SENSOR +1.66V
1/12
2/12 HITCH SWITCH-RAISE
SENSOR +3.33V
RAISE WORK SWITCH
4/12
5/12
7/12 HITCH SWITCH-LOWER
8/12
TRHJA011039790

Fig. 279

10.7.3.2 Power management switch



Fig. 280 Switch pinout

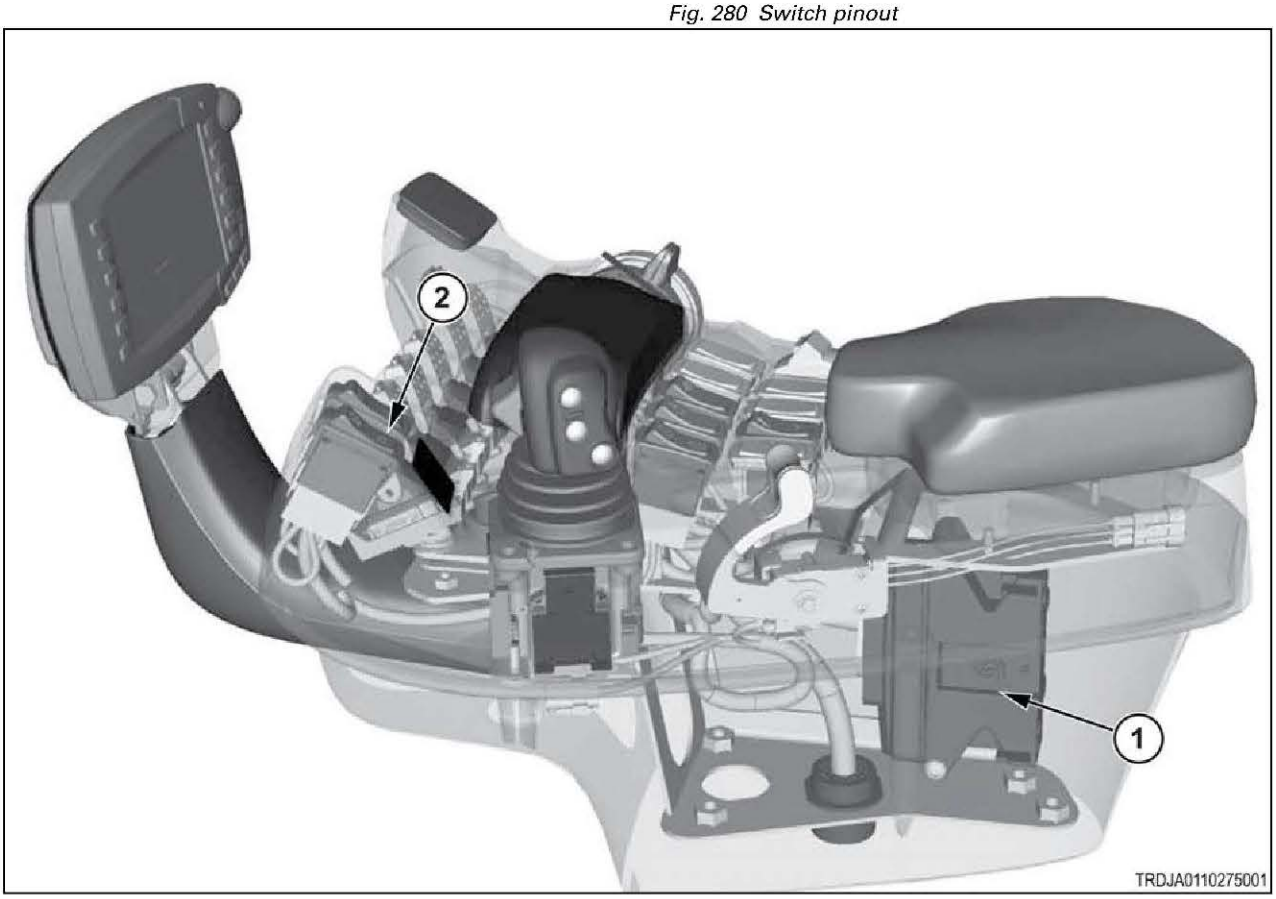

Fig. 281

(1)	Armrest module
(2)	Power management switch

10.7.4 Code SA 05 SPN 601 FMI 03

The power management, cruise control switch signal voltage is above normal.

The signal voltage is higher than the 3.33-volt supply. The most likely cause is a short circuit to a higher voltage circuit.

The switch is a momentary double-pole, double-throw (DPDT) type switch, except the "common" terminal is the data output instead of a power source. The 4 other contacts are connected to 3.33-volt power and 1.66-volt power. Operating the switch selects one of these voltages for the signal output. This error will likely be accompanied by a power supply error too. This information can be used to isolate the cause.

Diagnosis and solution

1. Determine when this error is reported.

a) Turn the key start switch to the on position.

b) Check for this error code (SA 05 SPN 601 FMI 03) as you operate the switch between the center position and cruise control on position.

Note that power supply errors will likely also be reported, as noted below.

Result

- The error is reported only when the switch is in the center position.

  Error code SA 05 SPN 3511 FMI 03 (3.33V power) is likely also reported.

  Diagnose the power supply error code first.

  Stop.
- The error is reported only when the switch is in the on position.

  Error code SA 05 SPN 3510 FMI 03 (1.66V power) is likely also reported.

  Diagnose the power supply error code first.

  Stop.
- The error is reported regardless of switch position.

  The signal wire is shorted to some voltage source.

  Repair or replace the harness.

  See step 2 to validate the repair.

2. Check if the diagnostic code remains.

a) Inspect and clean the harness connector contacts.

b) Connect all the connectors.

c) Turn the battery disconnect switch to the on position.

d) Turn the key start switch to the on position.

e) Operate the machine at low idle.

f) Check if the diagnostic code remains.

Result

- SPN 601 FMI 03 is not active.

  Stop.
- SPN 601 FMI 03 is active.

  Failure of the armrest module is possible but not common. Exit the procedure and do the procedure again. If the diagnostic code remains active, replace the module.

  Stop.

10.7.4.1 Power management switch electrical schematic

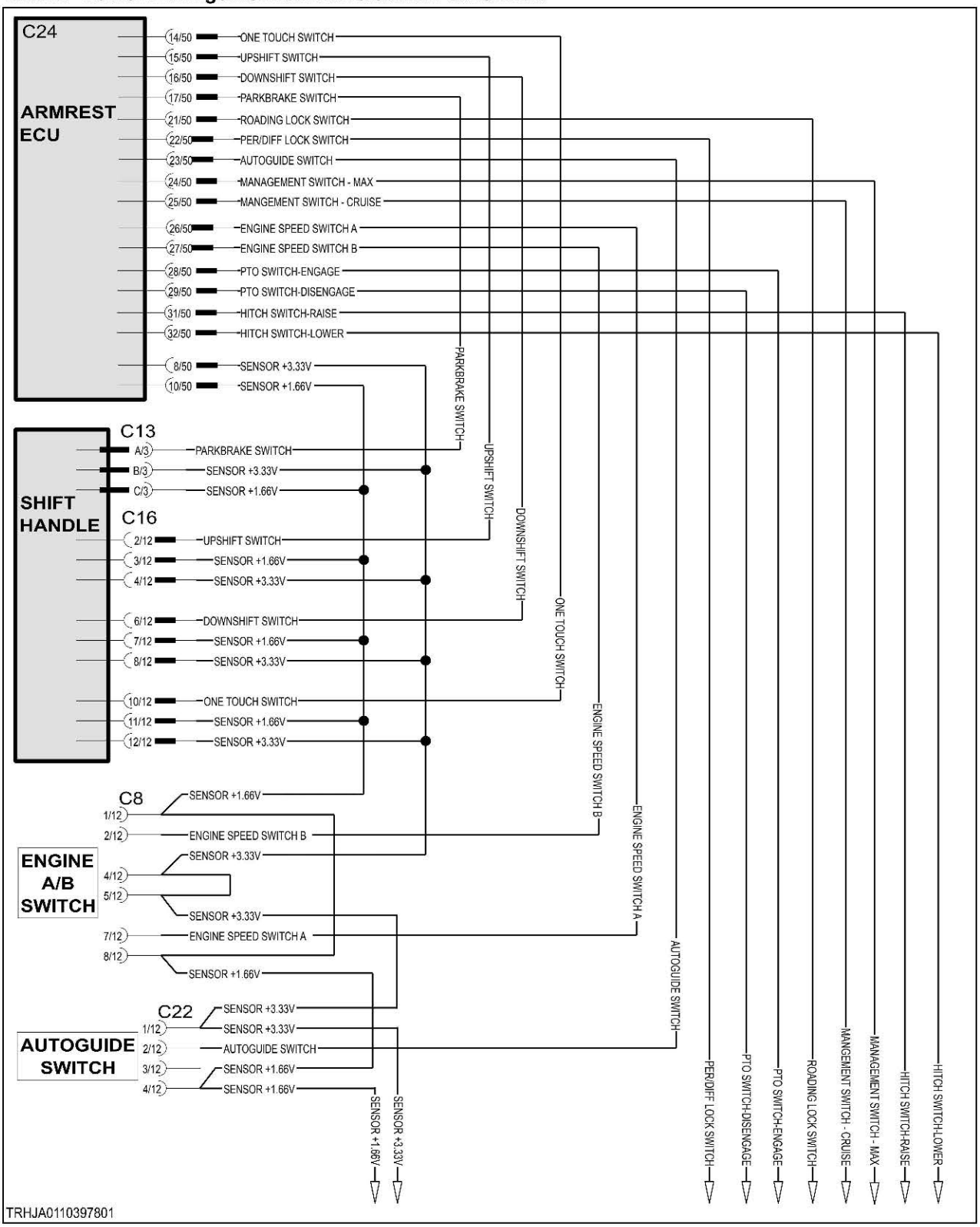

Fig. 282

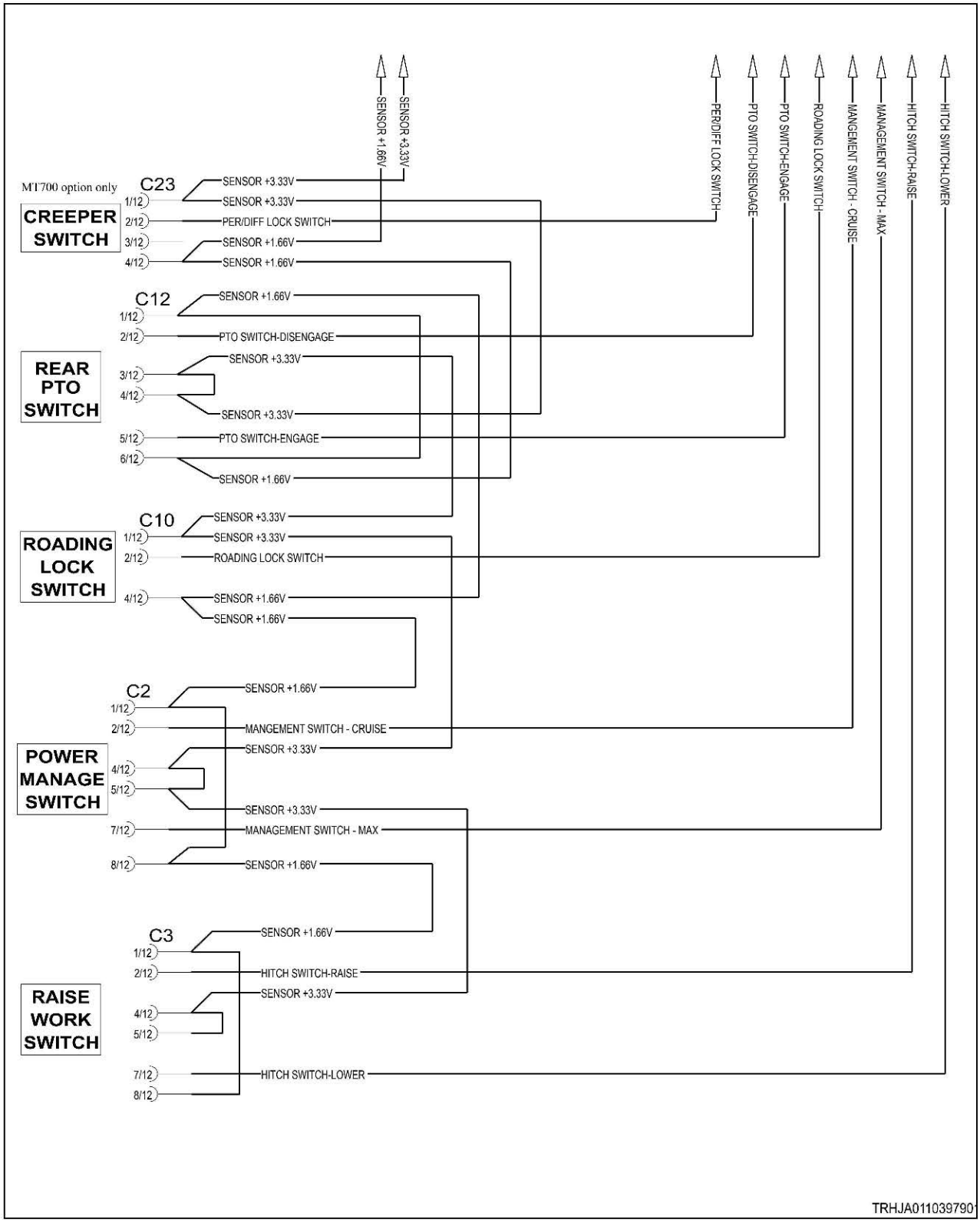
SENSOR +1.66V
SENSOR +3.33V
PER/DIFF LOCK SWITCH
PTO SWITCH-DISENGAGE
PTO SWITCH-ENGAGE
ROADING LOCK SWITCH
MANGEMENT SWITCH - CRUISE
MANAGEMENT SWITCH - MAX
HITCH SWITCH-RAISE
HITCH SWITCH-LOWER
MT700 option only
CREEPER SWITCH
C23
1/12 SENSOR +3.33V
2/12 PER/DIFF LOCK SWITCH
3/12 SENSOR +1.66V
4/12 SENSOR +1.66V
REAR PTO SWITCH
C12
1/12 SENSOR +1.66V
2/12 PTO SWITCH-DISENGAGE
3/12 SENSOR +3.33V
4/12
SENSOR +3.33V
5/12 PTO SWITCH-ENGAGE
6/12
SENSOR +1.66V
ROADING LOCK SWITCH
C10
1/12 SENSOR +3.33V
SENSOR +3.33V
2/12 ROADING LOCK SWITCH
4/12 SENSOR +1.66V
SENSOR +1.66V
POWER MANAGE SWITCH
C2
1/12 SENSOR +1.66V
2/12 MANGEMENT SWITCH - CRUISE
SENSOR +3.33V
4/12
5/12
SENSOR +3.33V
7/12 MANAGEMENT SWITCH - MAX
8/12 SENSOR +1.66V
RAISE WORK SWITCH
C3
1/12 SENSOR +1.66V
2/12 HITCH SWITCH-RAISE
SENSOR +3.33V
4/12
5/12
7/12 HITCH SWITCH-LOWER
8/12
TRHJA011039790

Fig. 283

10.7.4.2 Power management switch



Fig. 284 Switch pinout

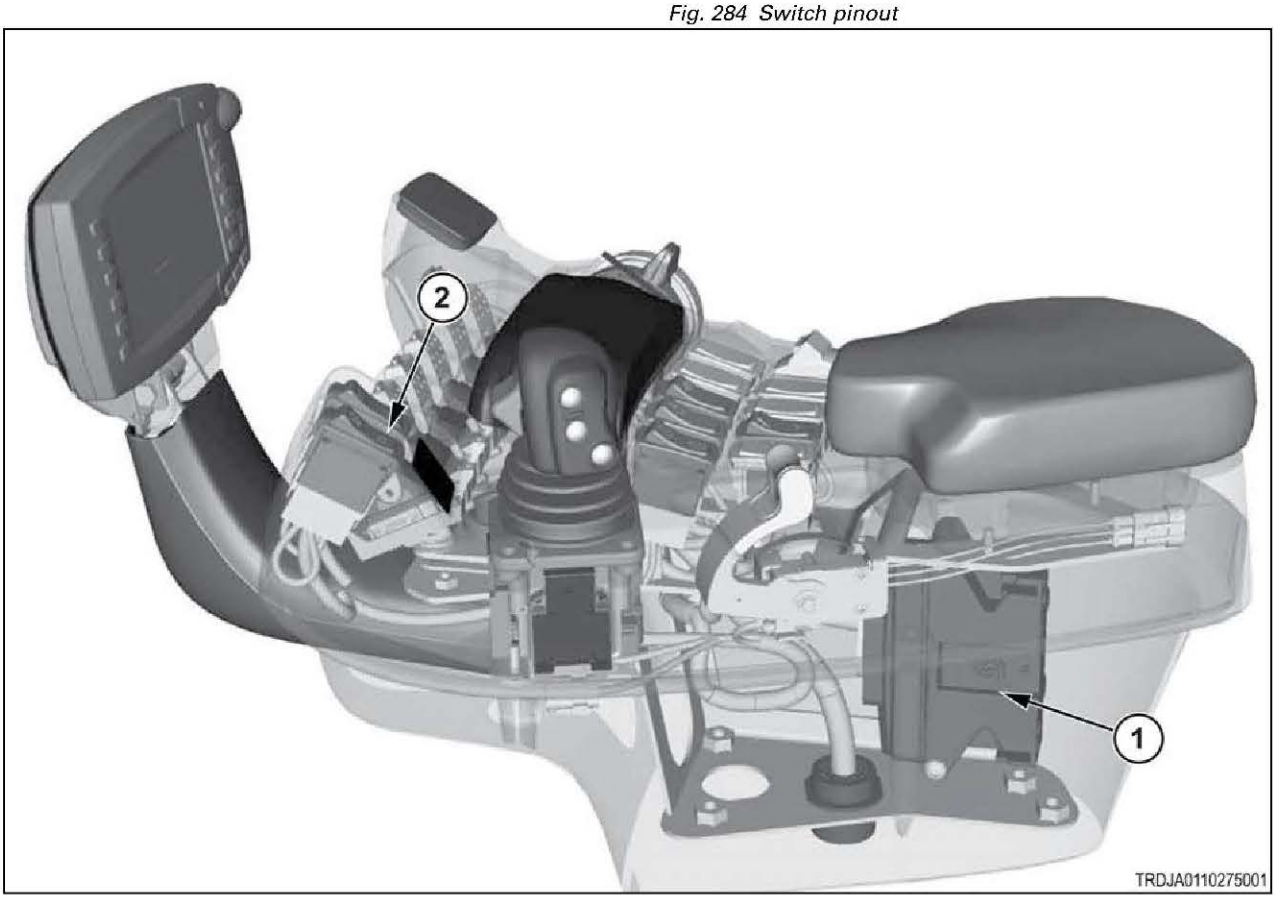

Fig. 285

(1)	Armrest module
(2)	Power management switch

10.7.5 Code SA 05 SPN 601 FMI 04

Power management, cruise control switch signal voltage is below normal.

The signal voltage is lower than the 1.66-volt supply. The most likely cause is a short circuit to ground.

The switch is a momentary double-pole, double-throw (DPDT) type switch, except the "common" terminal is the data output instead of a power source. The 4 other contacts are connected to 3.33-volt power and 1.66-volt power. Operating the switch selects one of these voltages for the signal output. One set of contacts is for cruise control, and the other set is for maximum power. This error will likely be accompanied by a power supply error too. This information can be used to isolate the cause.

Diagnosis and solution

1. Determine when this error is reported.

a) Turn the key start switch to the on position.

b) Check for this error code (SA 05 SPN 601 FMI 04) as you operate the switch between the center position and cruise control on position.

Note that power supply errors will likely also be reported, as noted below.

Result

- The error is reported only when the switch is in the center position.

  Error code SA 05 SPN 3511 FMI 04 (3.33V power) is likely also reported.

  Diagnose the power supply error code first.

  Stop.
- The error is reported only when the switch is in the on position.

  Error code SA 05 SPN 3510 FMI 04 (1.66V power) is likely also reported.

  Diagnose the power supply error code first.

  Stop.
- The error is reported regardless of switch position.

  The signal wire is shorted to ground.

  Repair or replace the harness.

  See step 2 to validate the repair.

2. Check if the diagnostic code remains.

a) Inspect and clean the harness connector contacts.

b) Connect all the connectors.

c) Turn the battery disconnect switch to the on position.

d) Turn the key start switch to the on position.

e) Operate the machine at low idle.

f) Check if the diagnostic code remains.

Result

- SPN 601 FMI 04 is not active.

  Stop.
- SPN 601 FMI 04 is active.

  Failure of the armrest module is possible but not common. Exit the procedure and do the procedure again. If the diagnostic code remains active, replace the module.

  Stop.

10.7.5.1 Power management switch electrical schematic

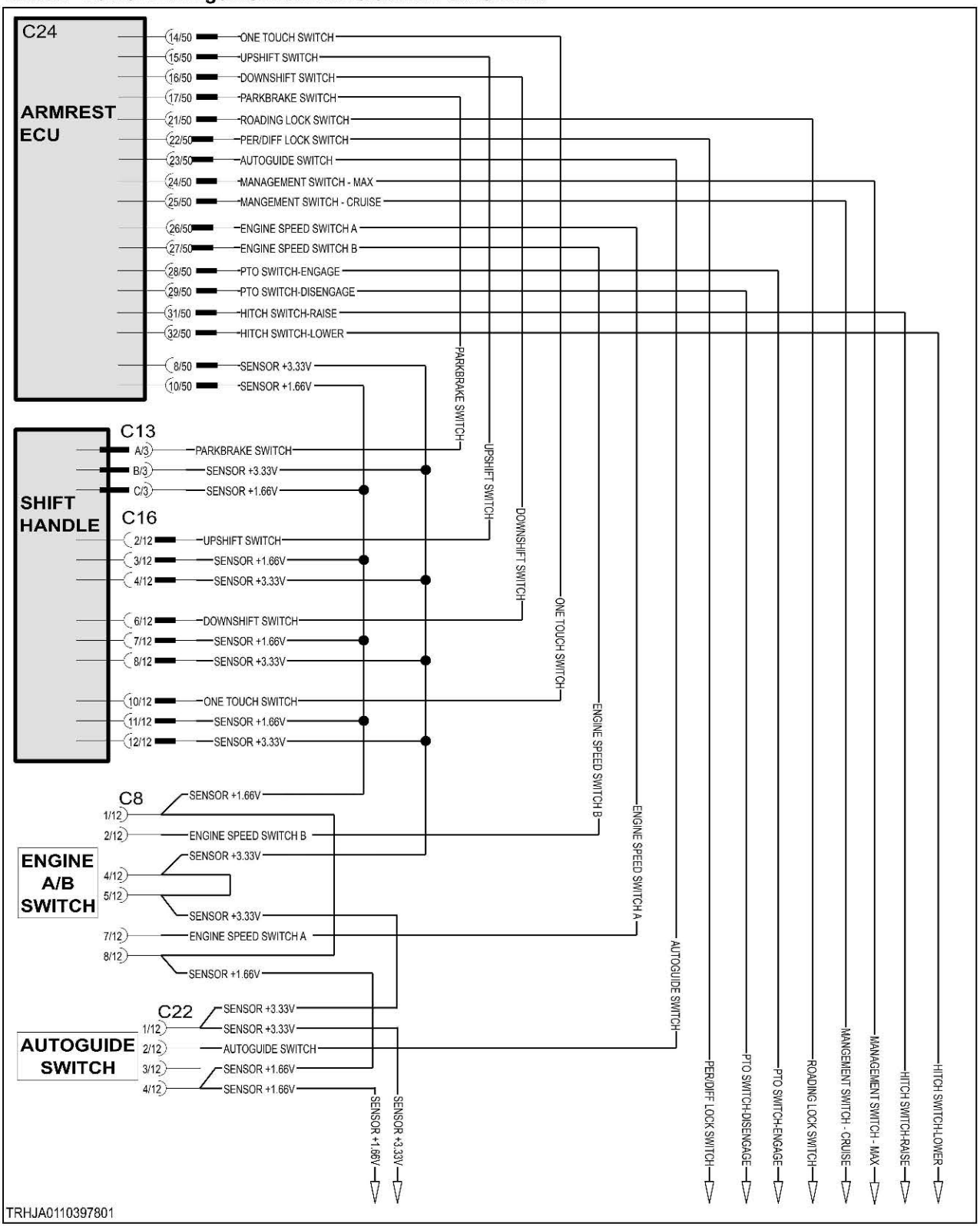

Fig. 286

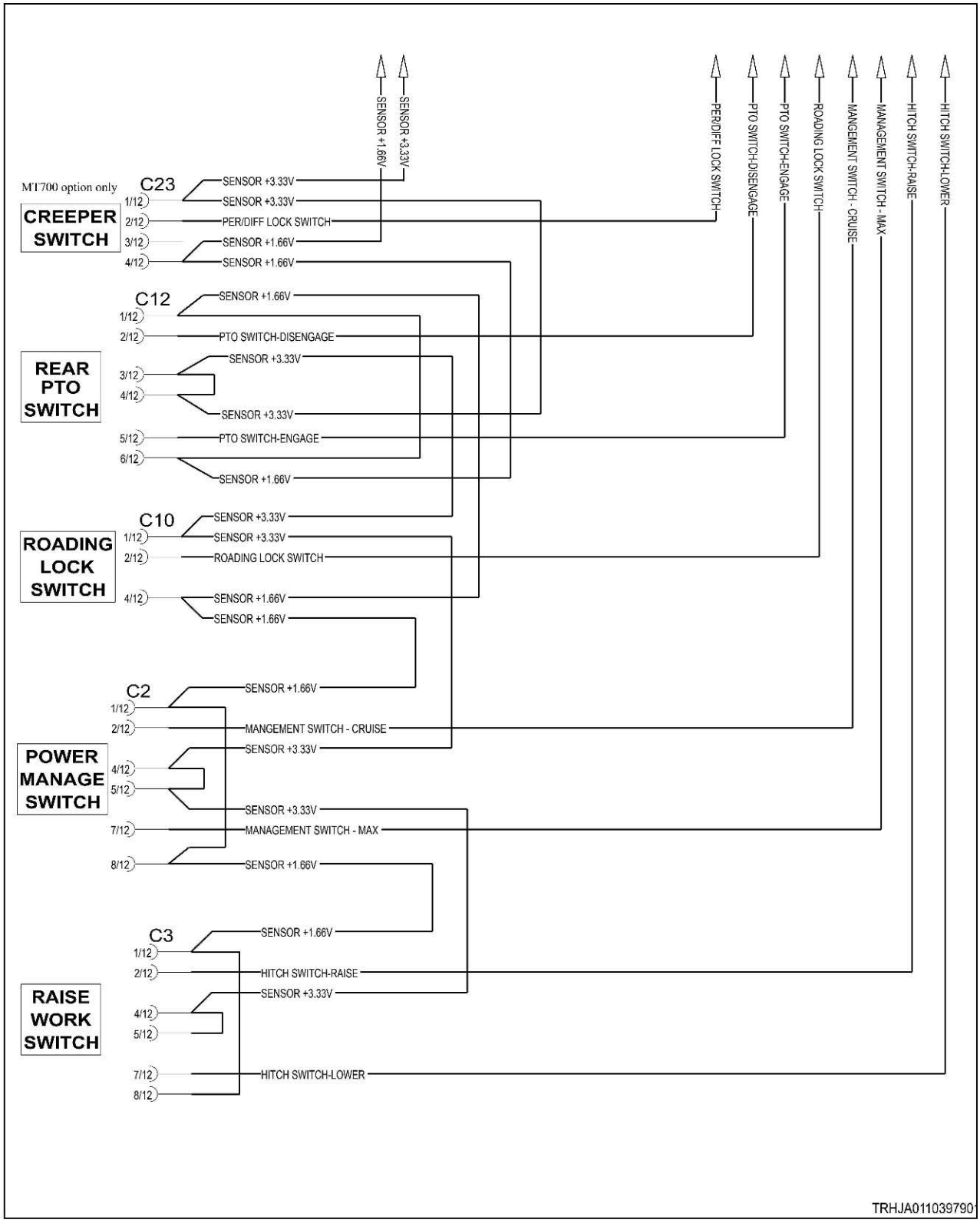
SENSOR +1.66V
SENSOR +3.33V
PER/DIFF LOCK SWITCH
PTO SWITCH-DISENGAGE
PTO SWITCH-ENGAGE
ROADING LOCK SWITCH
MANGEMENT SWITCH - CRUISE
MANAGEMENT SWITCH - MAX
HITCH SWITCH-RAISE
HITCH SWITCH-LOWER
MT700 option only
CREEPER SWITCH
C23
1/12 SENSOR +3.33V
SENSOR +3.33V
2/12 PER/DIFF LOCK SWITCH
3/12 SENSOR +1.66V
4/12 SENSOR +1.66V
C12
1/12 SENSOR +1.66V
2/12 PTO SWITCH-DISENGAGE
REAR PTO SWITCH
3/12 SENSOR +3.33V
4/12
SENSOR +3.33V
5/12 PTO SWITCH-ENGAGE
6/12
SENSOR +1.66V
C10
ROADING LOCK SWITCH
1/12 SENSOR +3.33V
SENSOR +3.33V
2/12 ROADING LOCK SWITCH
4/12 SENSOR +1.66V
SENSOR +1.66V
C2
1/12 SENSOR +1.66V
2/12 MANGEMENT SWITCH - CRUISE
POWER MANAGE SWITCH
SENSOR +3.33V
4/12
5/12
SENSOR +3.33V
7/12 MANAGEMENT SWITCH - MAX
8/12 SENSOR +1.66V
C3
SENSOR +1.66V
1/12
2/12 HITCH SWITCH-RAISE
SENSOR +3.33V
RAISE WORK SWITCH
4/12
5/12
7/12 HITCH SWITCH-LOWER
8/12
TRHJA011039790

Fig. 287

10.7.5.2 Power management switch



Fig. 288 Switch pinout

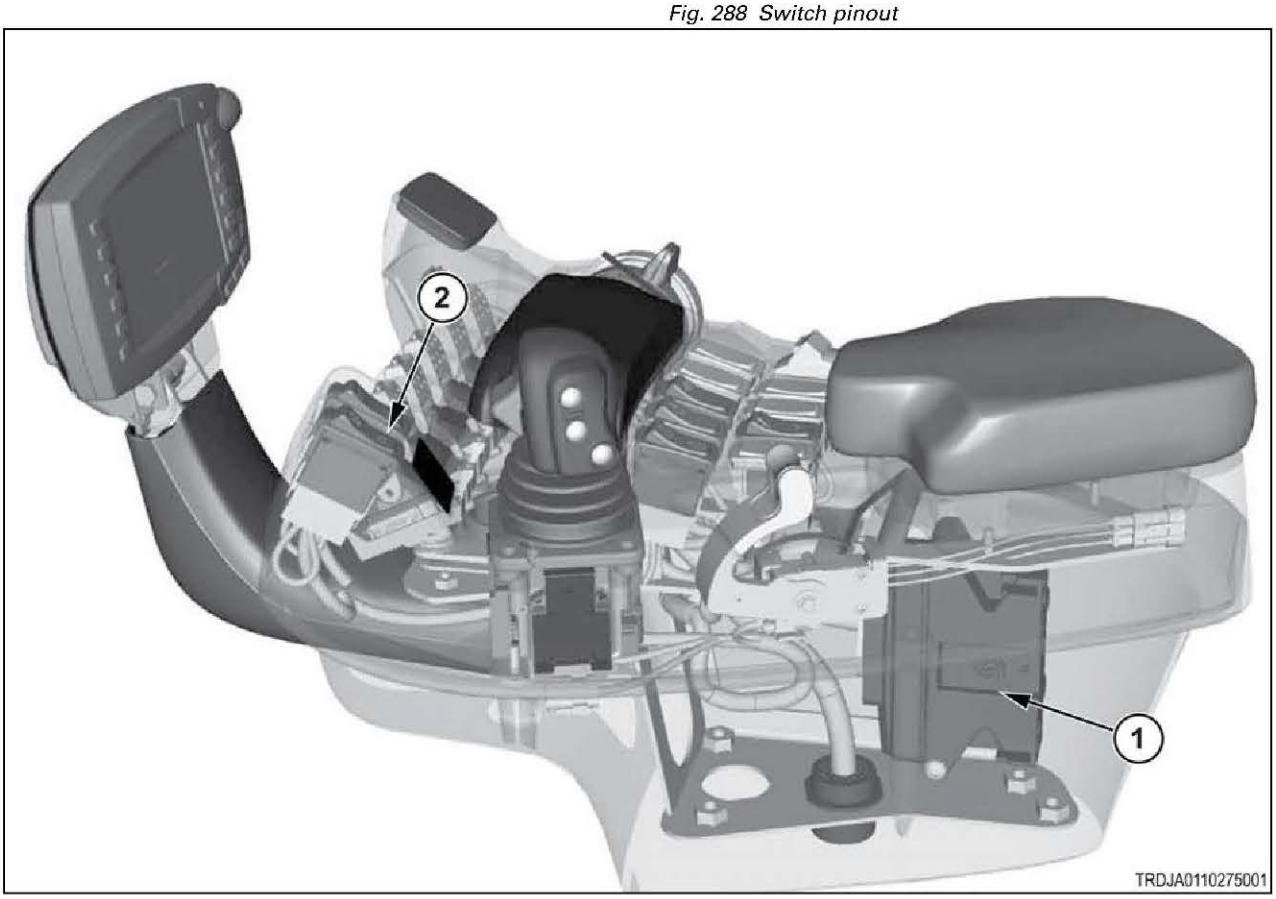

Fig. 289

(1)	Armrest module
(2)	Power management switch

10.7.6 Code SA 05 SPN 601 FMI 05

Open circuit in the power management, cruise control switch circuit.

The switch is a momentary double-pole, double-throw (DPDT) type switch, except the "common" terminal is the data output instead of a power source. The 4 other contacts are connected to 3.33-volt power and 1.66-volt power. Operating the switch selects one of these voltages for the signal output. One set of contacts is for cruise control, and the other set is for maximum power. These 2 power circuits are shared by several other function switches on the armrest. This knowledge can aid in diagnosing the fault.

Diagnosis and solution

1. Determine when this error is reported.

a) Turn the key start switch to the on position.

b) Check whether the error code is reported as you operate the switch between on and off states.

Result

- The error is reported only when the switch is in the off position.

  The open circuit is in the 3.33V power circuit.

  See step 2 to isolate the location.
- The error is reported only when the switch is in the on position.

  The open circuit is in the 1.66V power circuit.

  See step 2 to isolate the location.
- The error is reported regardless of switch position.

  The open circuit is in the signal circuit.

  Repair or replace the armrest harness.

  See step 3 to validate the repair.

2. Isolate the power circuit open circuit.

a) Operate all upstream (and at least one downstream) armrest switches, according to the list below, from their off to on positions.

Electrical sequence of switches, starting from the armrest module.

1. Shift Handle (3 pushbuttons)
2. Engine A/B switch
3. Autoguide switch
4. Creeper switch
5. Rear PTO
6. Roading Lock switch
7. Power management (cruise/full) switch
8. Hitch Raise/Work switch

b) Observe which other switches (if any) exhibit similar open circuit error codes.

Result

- At least one upstream switch reported a similar error.

  The open circuit lies at, or just upstream from, that switch.

  Repair or replace the armrest harness.

  See step 3 to validate the repair.

- Only downstream switches reported similar errors.

  The harness is open circuited at this switch location.

  Repair or replace the harness.

  See step 3 to validate the repair.
- No other switches reported similar errors.

  The switch is at fault.

  Replace the switch.

  See step 3 to validate the repair.

3. Check if the fault code remains.

a) Inspect and clean the harness connector contacts.
b) Connect all the connectors.
c) Turn the battery disconnect switch to the on position.
d) Turn the key start switch to the on position.
e) Operate the machine at low idle.
f) Check if the fault code remains.

Result

- SPN 601 FMI 05 is not active.

  Stop.
- SPN 601 FMI 05 is active.

  Failure of the armrest module is possible but not common. Exit the procedure and do the procedure again. If the fault code remains active, replace the armrest module.

  Stop.

10.7.6.1 Power management switch electrical schematic

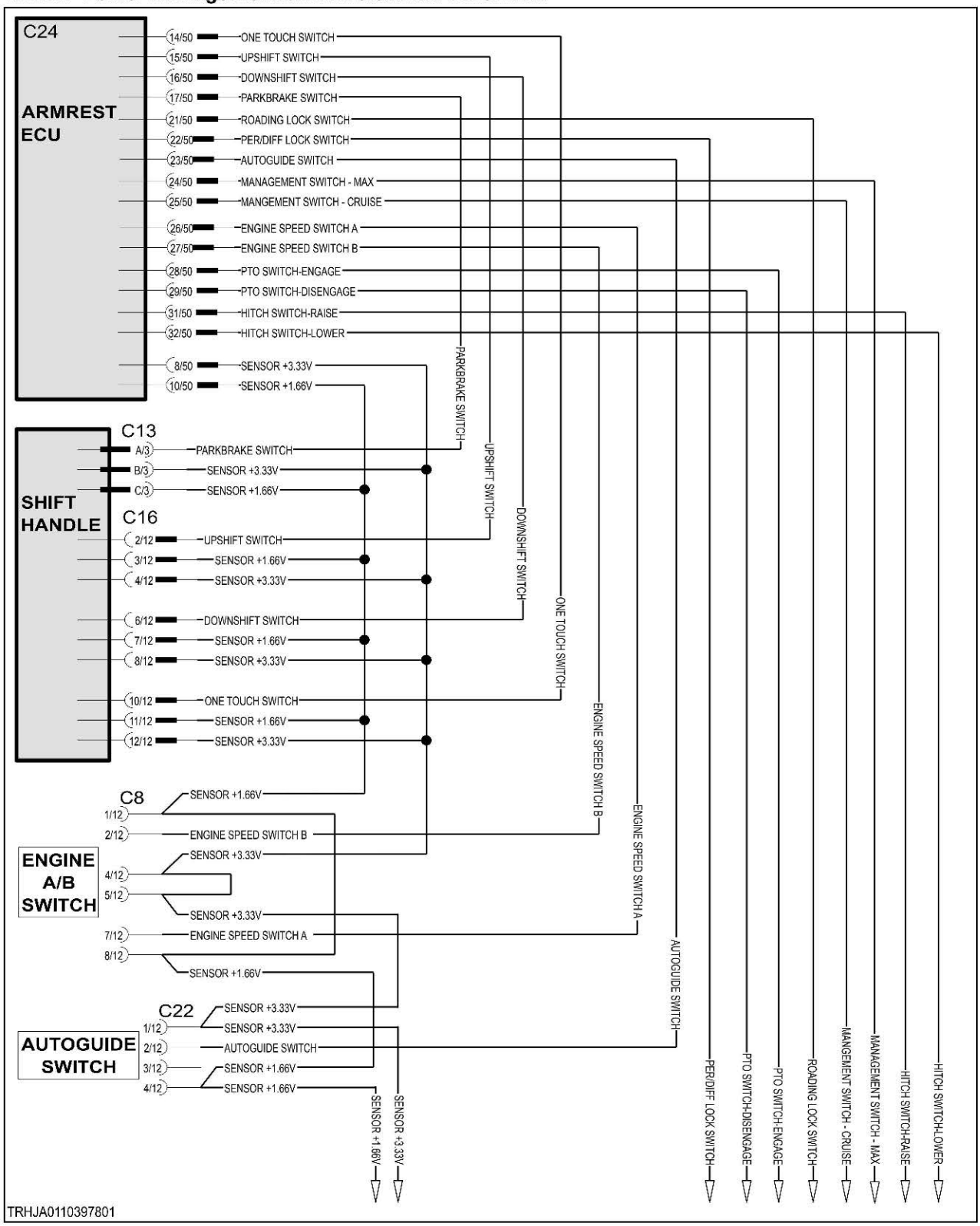

Fig. 290

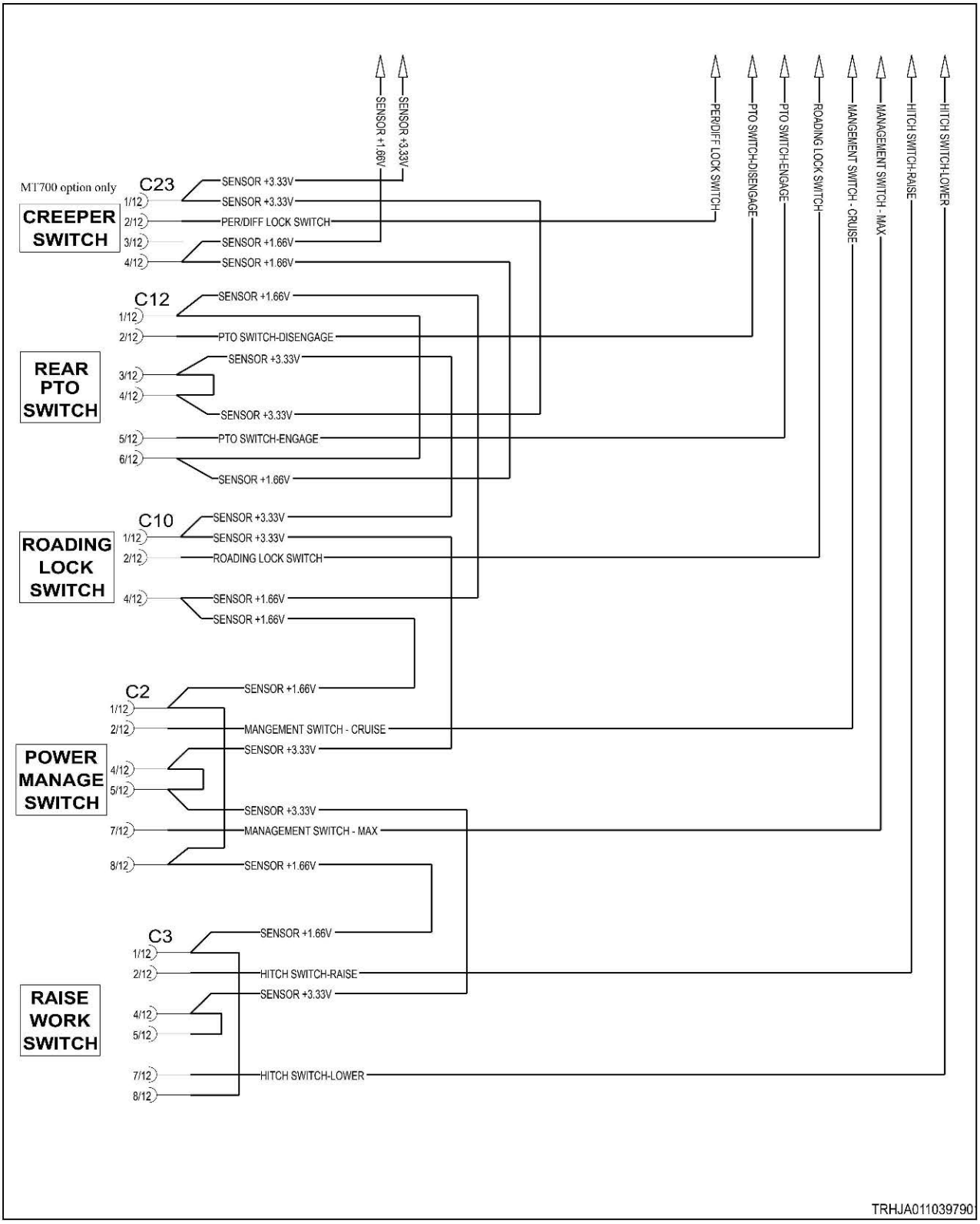
SENSOR +1.66V
SENSOR +3.33V
PER/DIFF LOCK SWITCH
PTO SWITCH-DISENGAGE
PTO SWITCH-ENGAGE
ROADING LOCK SWITCH
MANGEMENT SWITCH - CRUISE
MANAGEMENT SWITCH - MAX
HITCH SWITCH-RAISE
HITCH SWITCH-LOWER
MT700 option only
CREEPER SWITCH
C23
1/12 SENSOR +3.33V
2/12 SENSOR +3.33V
3/12 PER/DIFF LOCK SWITCH
4/12 SENSOR +1.66V
SENSOR +1.66V
C12
1/12 SENSOR +1.66V
2/12 PTO SWITCH-DISENGAGE
REAR PTO SWITCH
3/12 SENSOR +3.33V
4/12 SENSOR +3.33V
5/12 PTO SWITCH-ENGAGE
6/12 SENSOR +1.66V
C10
ROADING LOCK SWITCH
1/12 SENSOR +3.33V
SENSOR +3.33V
2/12 ROADING LOCK SWITCH
4/12 SENSOR +1.66V
SENSOR +1.66V
C2
1/12 SENSOR +1.66V
2/12 MANGEMENT SWITCH - CRUISE
POWER MANAGE SWITCH
SENSOR +3.33V
4/12
5/12
SENSOR +3.33V
7/12 MANAGEMENT SWITCH - MAX
8/12 SENSOR +1.66V
C3
1/12 SENSOR +1.66V
2/12 HITCH SWITCH-RAISE
SENSOR +3.33V
RAISE WORK SWITCH
4/12
5/12
7/12 HITCH SWITCH-LOWER
8/12
TRHJA011039790

Fig. 291

10.7.6.2 Power management switch



Fig. 292 Switch pinout

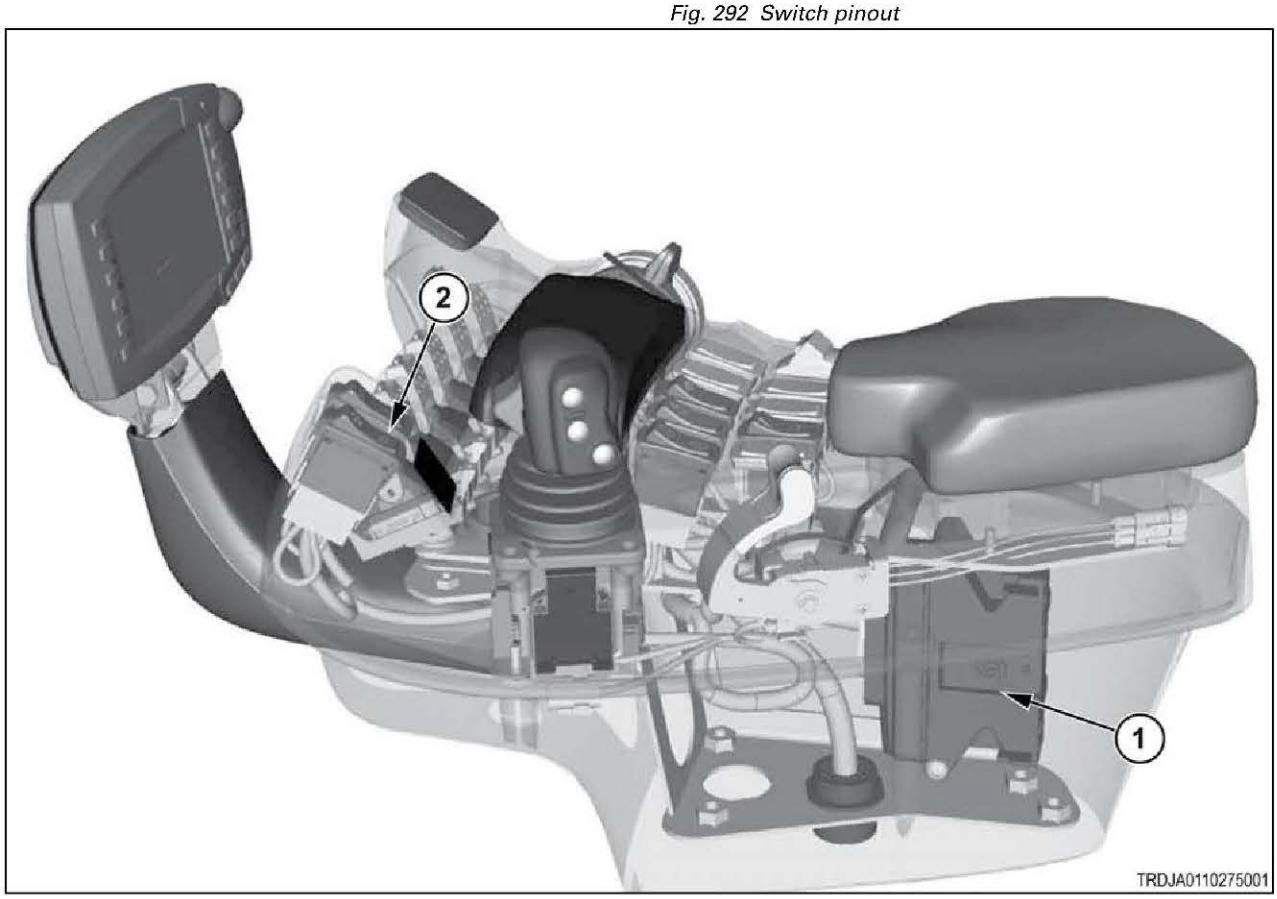

Fig. 293

(1)	Armrest module
(2)	Power management switch

10.7.7 Code SA 05 SPN 639 FMI 19

Armrest module is not able to communicate with the control modules connected to the powertrain controller area network (CAN).

Diagnosis and solution

1. Do a battery disconnect.

a) Turn the key start switch to the off position.
b) Turn the battery disconnect switch to the off position.
c) Wait 60 seconds to turn the battery disconnect switch to the on position.
d) Turn the key start switch to the on position.
e) Check the status of SPN 639 FMI 19.

Result

Expected result - controller area network (CAN) communication is correct.

Results:

- Yes - CAN communication is correct.
- No - CAN communication is not correct.

2. Inspect the harness connections.

a) Turn the key start switch to the off position.
b) Turn the battery disconnect switch to the off position.
c) Remove the key from the battery disconnect switch.
d) Inspect all the harness connections. Make sure the contacts are clean and the connections are good.
e) Make sure the harness is not damaged.
f) Make sure the wires at the connector are correct.

Result

Expected result - harness connections are good.

Results:

- Yes - harness connections are good.
- No - harness connections are not good.

  Repair or replace the harness.

3. Check for a short circuit to ground.

a) Turn the key start switch to the off position.
b) Turn the battery disconnect switch to the off position.
c) Remove the key from the battery disconnect switch.
d) Disconnect the harness connectors from all electronic control modules with the powertrain CAN data link.
e) Check resistance between electronic diagnostic tool (EDT) service connector contact C to frame ground.
f) Check resistance between EDT service connector contact D to frame ground.

Result

Expected result - resistance is more than 5000 ohms.

Results:

- Yes - resistance is more than 5000 ohms.
- No - resistance is not more than 5000 ohms.

  Repair or replace the harness.

4. Check for a short circuit to the positive battery circuit.

a) Turn the key start switch to the off position.
b) Turn the battery disconnect switch to the off position.
c) Remove the key from the battery disconnect switch.
d) Disconnect the harness connectors from all electronic control modules with the powertrain CAN data link.
e) Check resistance between EDT service connector contact C to connector contact A.
f) Check resistance between EDT service connector contact D to connector contact A.

Result

Expected result - resistance is more than 5000 ohms.

Results:

- Yes - resistance is more than 5000 ohms.
- No - resistance is not more than 5000 ohms.

  Repair or replace the harness.

5. Check for an open circuit in the harness.

a) Turn the key start switch to the off position.
b) Turn the battery disconnect switch to the off position.
c) Remove the key from the battery disconnect switch.
d) Disconnect the harness connectors from all electronic control modules with the powertrain CAN data link.
e) At the engine module harness connector, put a jumper wire between contact 54 and contact 70.
f) Check resistance from EDT service connector contact C to contact D.

Result

Expected result - resistance is less than 5 ohms.

Results:

- Yes - resistance is less than 5 ohms.
- No - resistance is not less than 5 ohms.

  Repair or replace the harness.

6. Check if the diagnostic code remains.

a) Inspect and clean the harness connector contacts.
b) Connect all the connectors.
c) Turn the battery disconnect switch to the on position.
d) Turn the key start switch to the on position.
e) Operate the machine at low idle.
f) Check if the diagnostic code remains.

Result

Expected result - the diagnostic code is not active.

Results:

- Yes - SPN 639 FMI 19 is not active.

  Stop.
- No - SPN 639 FMI 19 is active.

  Failure of the armrest module is possible but not common. Exit the procedure and do the procedure again. If the diagnostic code remains active, replace the module.

  Stop.

10.7.7.1 CAN electrical schematic

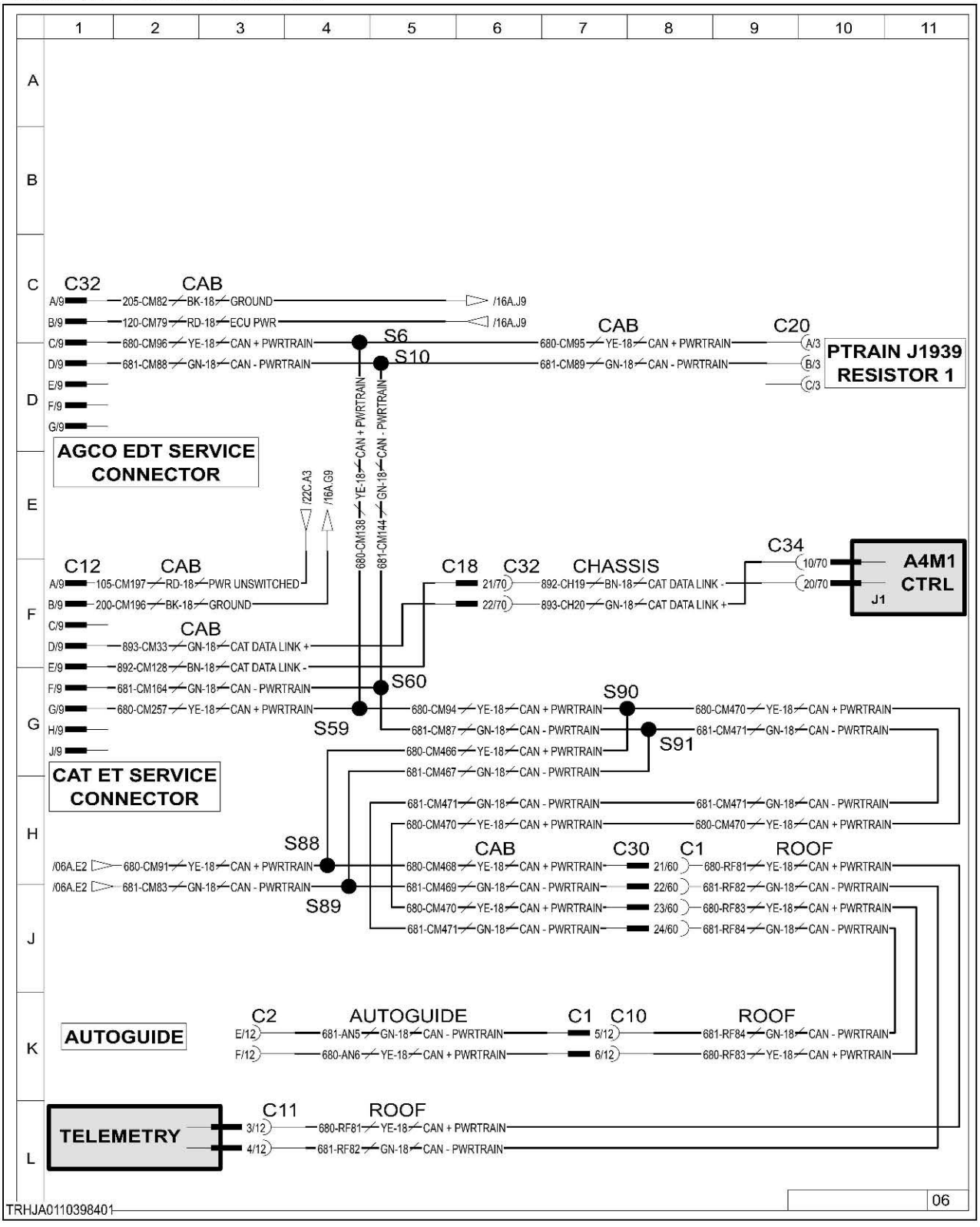

Fig. 294

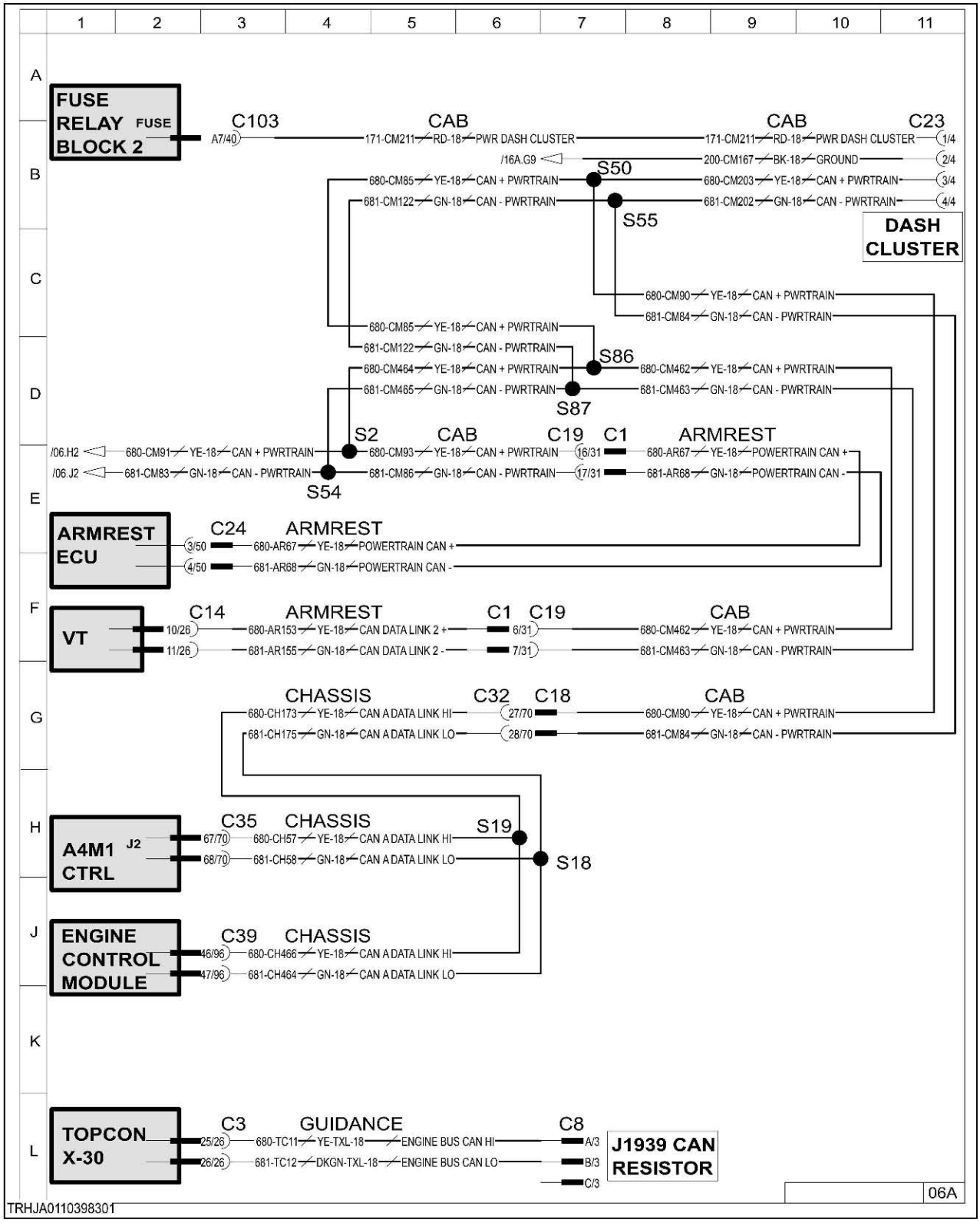

Fig. 295

10.7.8 Code SA 05 SPN 689 FMI 02

Differential lock switch erratic, intermittent, or incorrect signal.

Diagnosis and solution

1. Check the differential lock switch circuits for a short circuit.

a) Turn the key start switch to the off position.
b) Turn the battery disconnect switch to the off position.
c) Remove the key from the battery disconnect switch.
d) Disconnect the creeper switch and the armrest module connectors.
e) Check the resistance from the armrest module connector contact 22 to all the other connector contacts.

Result

Expected result - each resistance is more than 5000 ohms.

Results:

- Yes - each resistance is more than 5000 ohms.

  see step 2, page 10-576
- No - one or more resistance is not more than 5000 ohms.

  Repair or replace the harness.

  see step 5, page 10-577

2. Check the differential lock switch circuits for an open circuit.
a) Turn the key start switch to the off position.
b) Turn the battery disconnect switch to the off position.
c) Remove the key from the battery disconnect switch.
d) Disconnect the differential lock switch and the armrest module connectors.
e) Put a jumper wire between differential lock switch connector contact 2 and connector contact 1.
f) Check resistance from armrest module connector contact 22 to connector contact 8.

Result

Expected result - resistance is less than 5 ohms.

Results:

- Yes - resistance is less than 5 ohms.

  see step 2, page 10-576
- No - resistance is not less than 5 ohms.

  Repair or replace the harness.

  see step 5, page 10-577

3. Check the differential lock switch input voltage.
a) Turn the key start switch to the off position.
b) Turn the battery disconnect switch to the off position.
c) Remove the key from the battery disconnect switch.
d) Disconnect the differential lock switch.
e) Connect the armrest module connector.
f) Turn the battery disconnect switch to the on position.
g) Turn the key start switch to the on position.
h) Check voltage at the differential lock switch connector contact 1 to frame ground.

Result

Expected result - voltage at connector contact 1 is 3.3 volts.

Results:

- Yes - voltage is correct.

  see step 4, page 10-577

- No - voltage is not correct.

  Repair or replace the harness.

  see step 5, page 10-577

4. Check the differential lock switch output voltage.

a) Turn the key start switch to the off position.
b) Turn the battery disconnect switch to the off position.
c) Remove the key from the battery disconnect switch.
d) Connect the armrest module connector.
e) Turn the battery disconnect switch to the on position.
f) Turn the key start switch to the on position.
g) Actuate the differential lock switch.
h) Check voltage at the differential lock switch connector contact 4 to frame ground.

Result

Expected result - voltage at connector contact 4 is 1.75 volts.

Results:

- Yes - voltage is correct.

  see step 5, page 10-577
- No - voltage is not correct.

  Replace the creeper switch.

  see step 5, page 10-577

5. Check if the fault code remains.

a) Inspect and clean the harness connector contacts.
b) Connect all the connectors.
c) Turn the battery disconnect switch to the on position.
d) Turn the key start switch to the on position.
e) Operate the machine at low idle.
f) Check if the fault code remains.

Result

Expected result - the fault code is not active.

Results:

- Yes - SPN 689 FMI 02 is not active.

  Stop.
- No - SPN 689 FMI 02 is active.

  Failure of the armrest module is possible but not common. Exit the procedure and do the procedure again. If the fault code remains active, replace the armrest module.

  Stop.

10.7.8.1 Differential lock switch electrical schematic

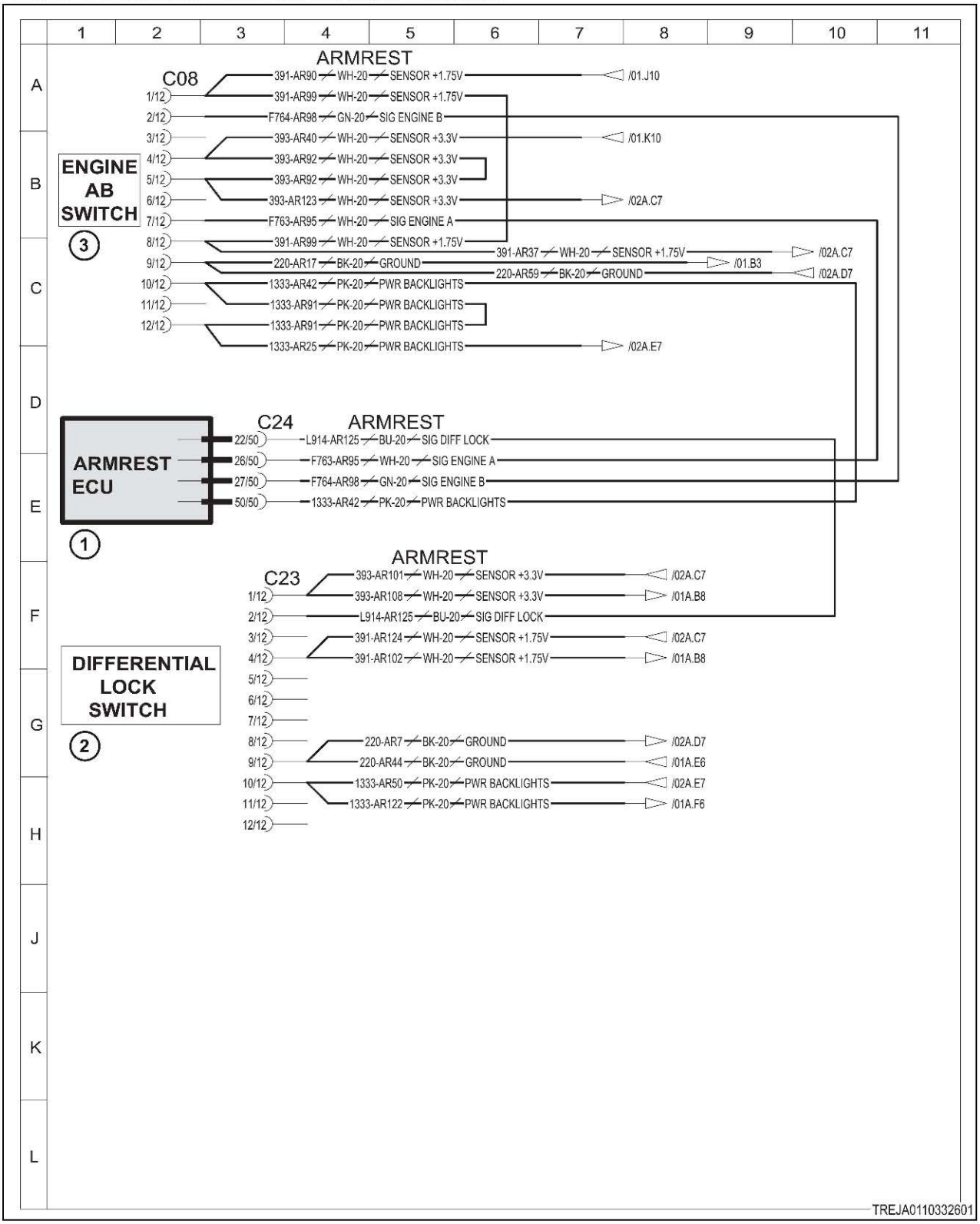

Fig. 296

Schematic legend		
Item	Schematic term	Description
1	ARMREST ECU	Armrest module
2	DIFFERENTIAL LOCK SWITCH	Differential lock switch
3	ENGINE A/B SWITCH	Engine A/B switch
--	SIG DIFF LOCK	Signal differential lock
--	SIG ENGINE B	Signal engine B
--	SIG ENGINE A	Signal engine A
--	PWR BACKLIGHTS	Power backlights
--	ARMREST	Armrest
--	SENSOR +3.3 V	Sensor +3.3 volts
--	SENSOR +1.75 V	Sensor +1.75 volts
--	GROUND	Ground

10.7.9 Code SA 05 SPN 689 FMI 03

Differential lock switch short to high source.

Diagnosis and solution

1. Check the differential lock switch circuits for a short circuit.
a) Turn the key start switch to the off position.
b) Turn the battery disconnect switch to the off position.
c) Remove the key from the battery disconnect switch.
d) Disconnect the differential lock switch switch and the armrest module connectors.
e) Check the resistance from the armrest module connector contact 22 to all the other connector contacts.

Result

Expected result - each resistance is more than 5000 ohms.

Results:

- Yes - each resistance is more than 5000 ohms.

  see step 2, page 10-579
- No - one or more resistance is not more than 5000 ohms.

  Repair or replace the harness.

  see step 4, page 10-580

2. Check the differential lock switch input voltage.
a) Turn the key start switch to the off position.
b) Turn the battery disconnect switch to the off position.
c) Remove the key from the battery disconnect switch.
d) Disconnect the differential lock switch.
e) Connect the armrest module connector.
f) Turn the battery disconnect switch to the on position.
g) Turn the key start switch to the on position.
h) Check voltage at differential lock switch connector contact 1 to frame ground.

Result

Expected result - voltage at connector contact 1 is 3.3 volts.

Results:

- Yes - voltage is correct.

  see step 3, page 10-580
- No - voltage is not correct.

  Repair or replace the harness.

  see step 4, page 10-580

3. Check the differential lock switch output voltage.

a) Turn the key start switch to the off position.
b) Turn the battery disconnect switch to the off position.
c) Remove the key from the battery disconnect switch.
d) Connect the armrest module connector.
e) Turn the battery disconnect switch to the on position.
f) Turn the key start switch to the on position.
g) Actuate the differential lock switch.
h) Check voltage at the differential lock switch connector contact 4 to frame ground.

Result

Expected result - voltage at connector contact 4 is 1.75 volts.

Results:

- Yes - voltage is correct.

  see step 4, page 10-580
- No - voltage is not correct.

  Replace the differential lock switch.

  see step 4, page 10-580

4. Check if the fault code remains.

a) Inspect and clean the harness connector contacts.
b) Connect all the connectors.
c) Turn the battery disconnect switch to the on position.
d) Turn the key start switch to the on position.
e) Operate the machine at low idle.
f) Check if the fault code remains.

Result

Expected result - the fault code is not active.

Results:

- Yes - SPN 689 FMI 03 is not active.

  Stop.
- No - SPN 689 FMI 03 is active.

  Failure of the armrest module is possible but not common. Exit the procedure and do the procedure again. If the fault code remains active, replace the armrest module.

  Stop.

10.7.9.1 Differential lock switch electrical schematic

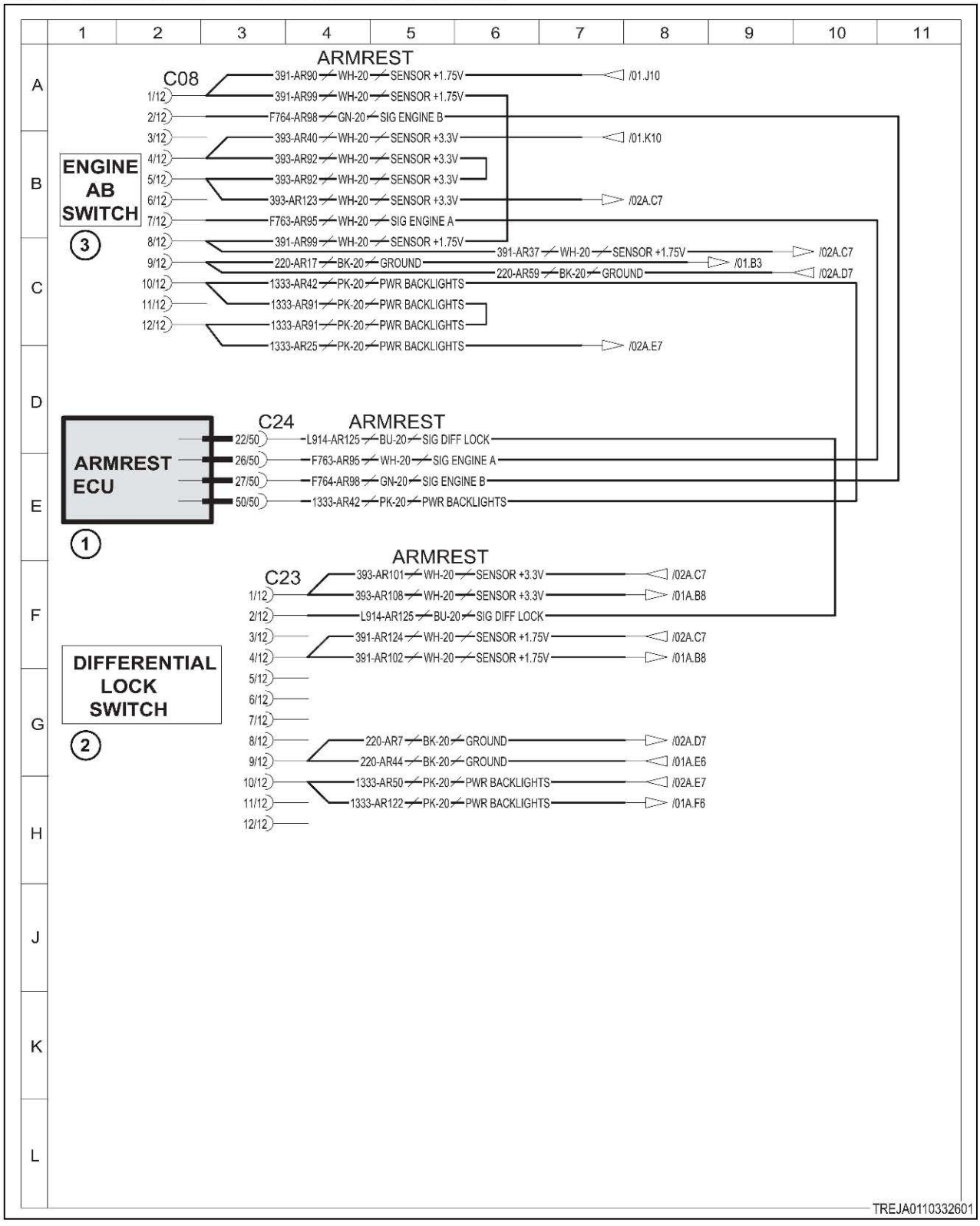

Fig. 297

Schematic legend		
Item	Schematic term	Description
1	ARMREST ECU	Armrest module
2	DIFFERENTIAL LOCK SWITCH	Differential lock switch
3	ENGINE A/B SWITCH	Engine A/B switch
--	SIG DIFF LOCK	Signal differential lock
--	SIG ENGINE B	Signal engine B
--	SIG ENGINE A	Signal engine A
--	PWR BACKLIGHTS	Power backlights
--	ARMREST	Armrest
--	SENSOR +3.3 V	Sensor +3.3 volts
--	SENSOR +1.75 V	Sensor +1.75 volts
--	GROUND	Ground

10.7.10 Code SA 05 SPN 689 FMI 04

Differential lock switch short to ground.

Diagnosis and solution

1. Check the differential lock switch circuits for a short circuit.
a) Turn the key start switch to the off position.
b) Turn the battery disconnect switch to the off position.
c) Remove the key from the battery disconnect switch.
d) Disconnect the differential lock switch and the armrest module connectors.
e) Check resistance from contact 22 to all other armrest module harness connector contacts.

Result

Expected result - each resistance is more than 5000 ohms.

Results:

- Yes - each resistance is more than 5000 ohms.

  see step 2, page 10-582
- No - one or more resistance is not more than 5000 ohms.

  Repair or replace the harness.

  see step 4, page 10-583

2. Check the differential lock switch input voltage.
a) Turn the key start switch to the off position.
b) Turn the battery disconnect switch to the off position.
c) Remove the key from the battery disconnect switch.
d) Disconnect the differential lock switch.
e) Connect the armrest module connector.
f) Turn the battery disconnect switch to the on position.
g) Turn the key start switch to the on position.
h) Check voltage at the differential lock switch connector contact 1 to frame ground.

Result

Expected result - voltage at connector contact 1 is 3.3 volts.

Results:

- Yes - voltage is correct.

  see step 3, page 10-583
- No - voltage is not correct.

  Repair or replace the harness.

  see step 4, page 10-583

3. Check the differential lock switch output voltage.

a) Turn the key start switch to the off position.
b) Turn the battery disconnect switch to the off position.
c) Remove the key from the battery disconnect switch.
d) Connect the armrest module connector.
e) Turn the battery disconnect switch to the on position.
f) Turn the key start switch to the on position.
g) Actuate the differential lock switch.
h) Check voltage at the differential lock switch connector contact 4 to frame ground.

Result

Expected result - voltage at connector contact 4 is 1.75 volts.

Results:

- Yes - voltage is correct.

  see step 4, page 10-583
- No - voltage is not correct.

  Replace the differential lock switch.

  see step 4, page 10-583

4. Check if the fault code remains.

a) Inspect and clean the harness connector contacts.
b) Connect all the connectors.
c) Turn the battery disconnect switch to the on position.
d) Turn the key start switch to the on position.
e) Operate the machine at low idle.
f) Check if the fault code remains.

Result

Expected result - the fault code is not active.

Results:

- Yes - SPN 689 FMI 04 is not active.

  Stop.
- No - SPN 689 FMI 04 is active.

  Failure of the armrest module is possible but not common. Exit the procedure and do the procedure again. If the fault code remains active, replace the armrest module.

  Stop.

10.7.10.1 Differential lock switch electrical schematic

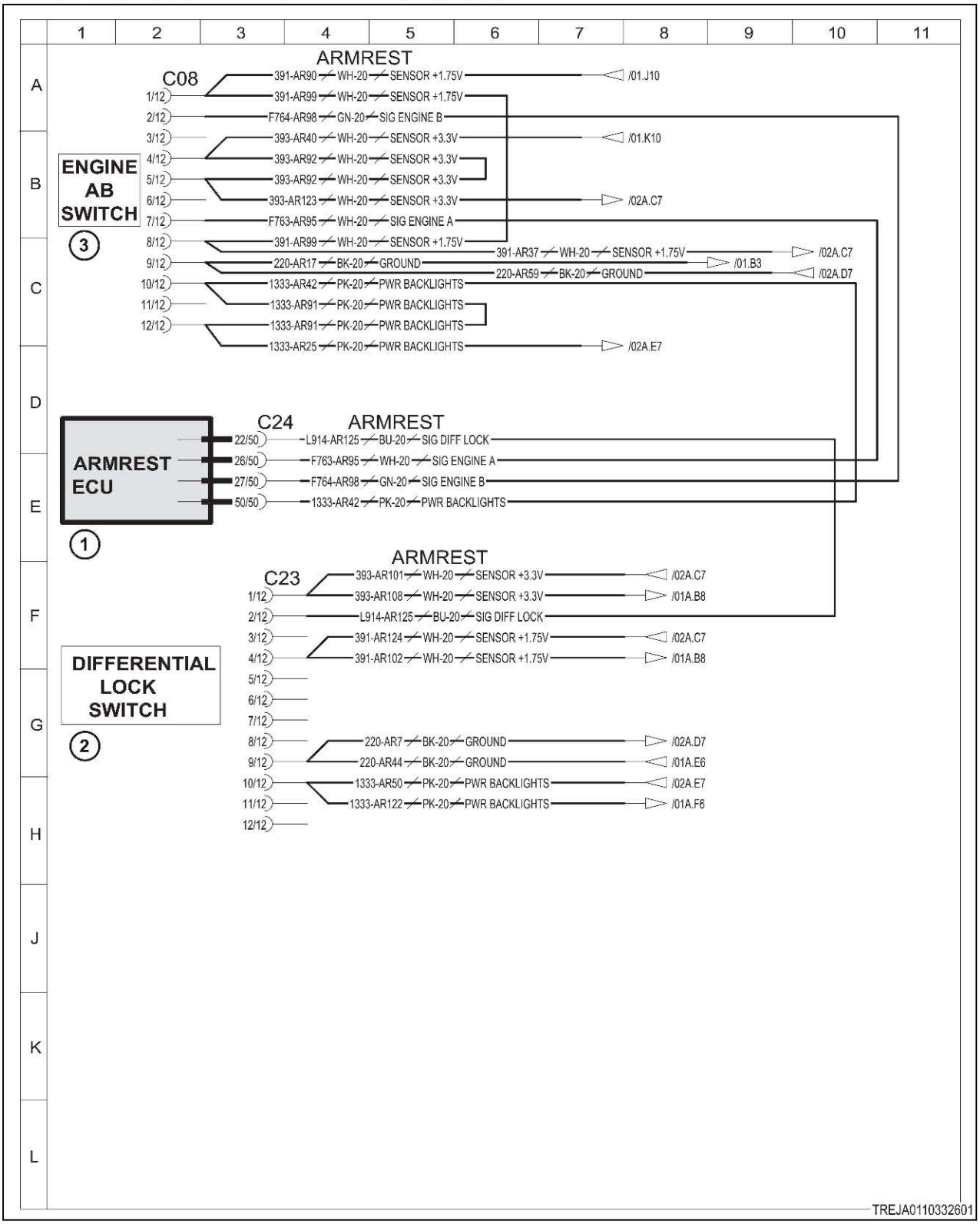

Fig. 298

Schematic legend		
Item	Schematic term	Description
1	ARMREST ECU	Armrest module
2	DIFFERENTIAL LOCK SWITCH	Differential lock switch
3	ENGINE A/B SWITCH	Engine A/B switch
--	SIG DIFF LOCK	Signal differential lock
--	SIG ENGINE B	Signal engine B
--	SIG ENGINE A	Signal engine A
--	PWR BACKLIGHTS	Power backlights
--	ARMREST	Armrest
--	SENSOR +3.3 V	Sensor +3.3 volts
--	SENSOR +1.75 V	Sensor +1.75 volts
--	GROUND	Ground

10.7.11 Code SA 05 SPN 689 FMI 05

Differential lock switch open circuit.

Diagnosis and solution

1. Check the differential lock switch circuits for an open circuit.

a) Turn the key start switch to the off position.
b) Turn the battery disconnect switch to the off position.
c) Remove the key from the battery disconnect switch.
d) Disconnect the differential lock switch and the armrest module connectors.
e) Put a jumper wire between the differential lock switch connector contact 2 and connector contact 1.
f) Check resistance from armrest module connector contact 22 to connector contact 8.

Result

Expected result - resistance is less than 5 ohms.

Results:

- Yes - resistance is less than 5 ohms.

  see step 2, page 10-585
- No - resistance is not less than 5 ohms.

  Repair or replace the harness.

  see step 4, page 10-586

2. Check the differential lock switch input voltage.

a) Turn the key start switch to the off position.
b) Turn the battery disconnect switch to the off position.
c) Remove the key from the battery disconnect switch.
d) Disconnect the differential lock switch.
e) Connect the armrest module connector.
f) Turn the battery disconnect switch to the on position.
g) Turn the key start switch to the on position.
h) Check voltage at differential lock switch connector contact 1 to frame ground.

Result

Expected result - voltage at connector contact 1 is 3.3 volts.

Results:

- Yes - voltage is correct.

  see step 3, page 10-586
- No - voltage is not correct.

  Repair or replace the harness.

  see step 4, page 10-586

3. Check the differential lock switch output voltage.

a) Turn the key start switch to the off position.
b) Turn the battery disconnect switch to the off position.
c) Remove the key from the battery disconnect switch.
d) Connect the armrest module connector.
e) Turn the battery disconnect switch to the on position.
f) Turn the key start switch to the on position.
g) Actuate the differential lock switch.
h) Check voltage at the differential lock switch connector contact 4 to frame ground.

Result

Expected result - voltage at connector contact 4 is 1.75 volts.

Results:

- Yes - voltage is correct.

  see step 4, page 10-586
- No - voltage is not correct.

  Replace the differential lock switch.

  see step 4, page 10-586

4. Check if the fault code remains.

a) Inspect and clean the harness connector contacts.
b) Connect all the connectors.
c) Turn the battery disconnect switch to the on position.
d) Turn the key start switch to the on position.
e) Operate the machine at low idle.
f) Check if the fault code remains.

Result

Expected result - the fault code is not active.

Results:

- Yes - SPN 689 FMI 05 is not active.

  Stop.
- No - SPN 689 FMI 05 is active.

  Failure of the armrest module is possible but not common. Exit the procedure and do the procedure again. If the fault code remains active, replace the armrest module.

  Stop.

10.7.11.1 Differential lock switch electrical schematic

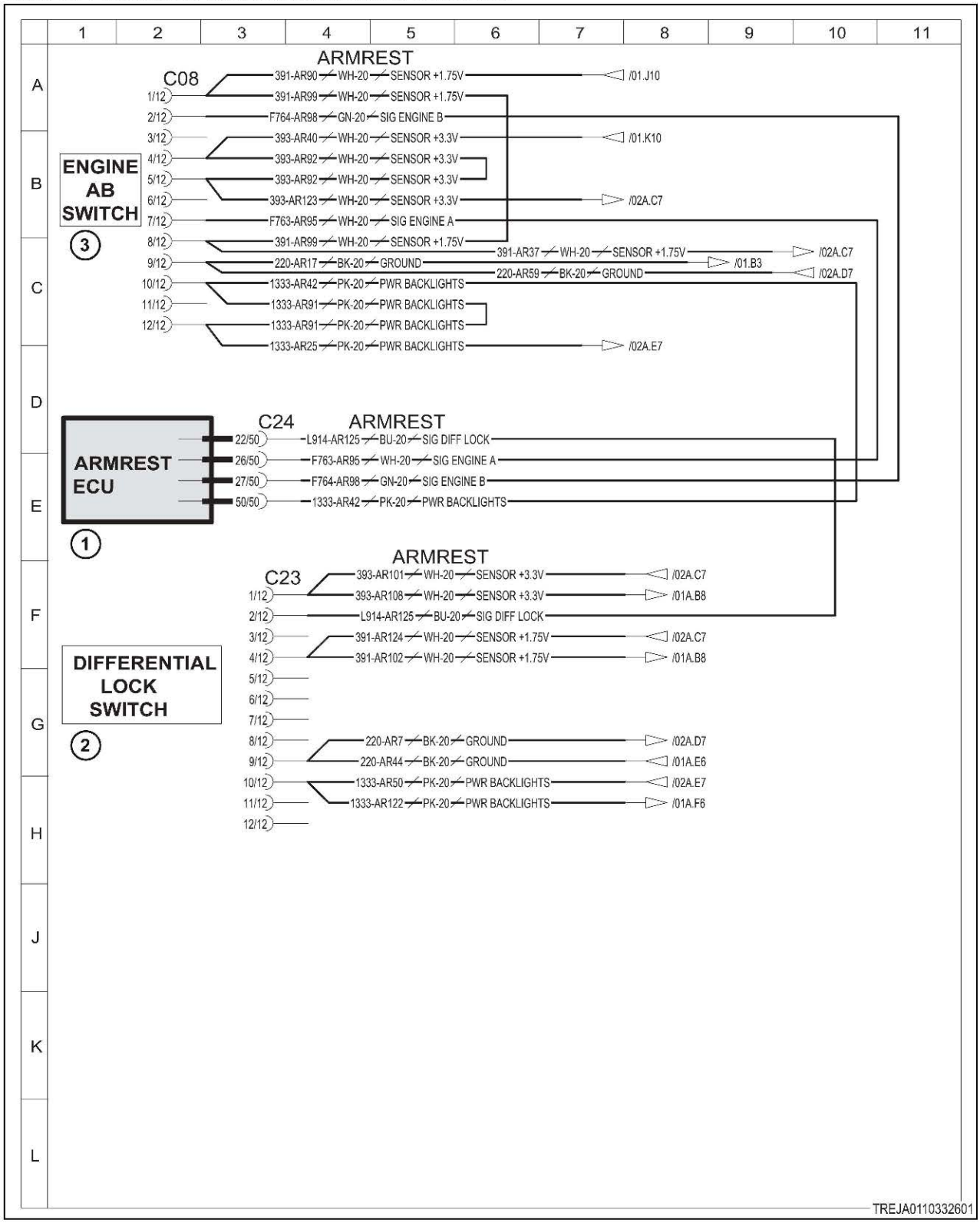

Fig. 299

Schematic legend		
Item	Schematic term	Description
1	ARMREST ECU	Armrest module
2	DIFFERENTIAL LOCK SWITCH	Differential lock switch
3	ENGINE A/B SWITCH	Engine A/B switch
--	SIG DIFF LOCK	Signal differential lock
--	SIG ENGINE B	Signal engine B
--	SIG ENGINE A	Signal engine A
--	PWR BACKLIGHTS	Power backlights
--	ARMREST	Armrest
--	SENSOR +3.3 V	Sensor +3.3 volts
--	SENSOR +1.75 V	Sensor +1.75 volts
--	GROUND	Ground

10.7.12 Code SA 05 SPN 898 FMI 00

The hand throttle lever position sensor signal is above the normal range.

Diagnosis and solution

1. Check sensor voltages.
a) Leave the sensor connected.
b) Turn the battery disconnect switch to the on position.
c) Check the voltage between contacts 1 and 2 of the sensor connector.

Result

- Voltage is not at or near 12 volts.

  Repair or replace the armrest harness.

  See step 2 to validate the repair.
- Voltage is 12 volts.

  Continue

d) Check the voltage between contacts 2 and 3 while moving the lever through its range of motion.

Result

The expected voltage range is 0.5 to 4.5 volts.

- The voltage remains in-range throughout the lever's motion.

  See step 2 to check if the error persists.
- The voltage exceeds 4.5 volts.

  Replace the sensor.

  See step 2 to validate the repair.

2. Check if the diagnostic code remains.
a) Inspect and clean the harness connector contacts.
b) Connect all the connectors.
c) Turn the battery disconnect switch to the on position.
d) Turn the key start switch to the on position.
e) Operate the machine at low idle.

f) Check if the diagnostic code remains.

Result

- SPN 898 FMI 00 is not active.

  Stop.
- SPN 898 FMI 00 is active.

  Failure of the armrest module is possible but not common. Exit the procedure and do the procedure again. If the diagnostic code remains active, replace the module.

  Stop.

10.7.12.1 Throttle lever position sensor electrical schematic

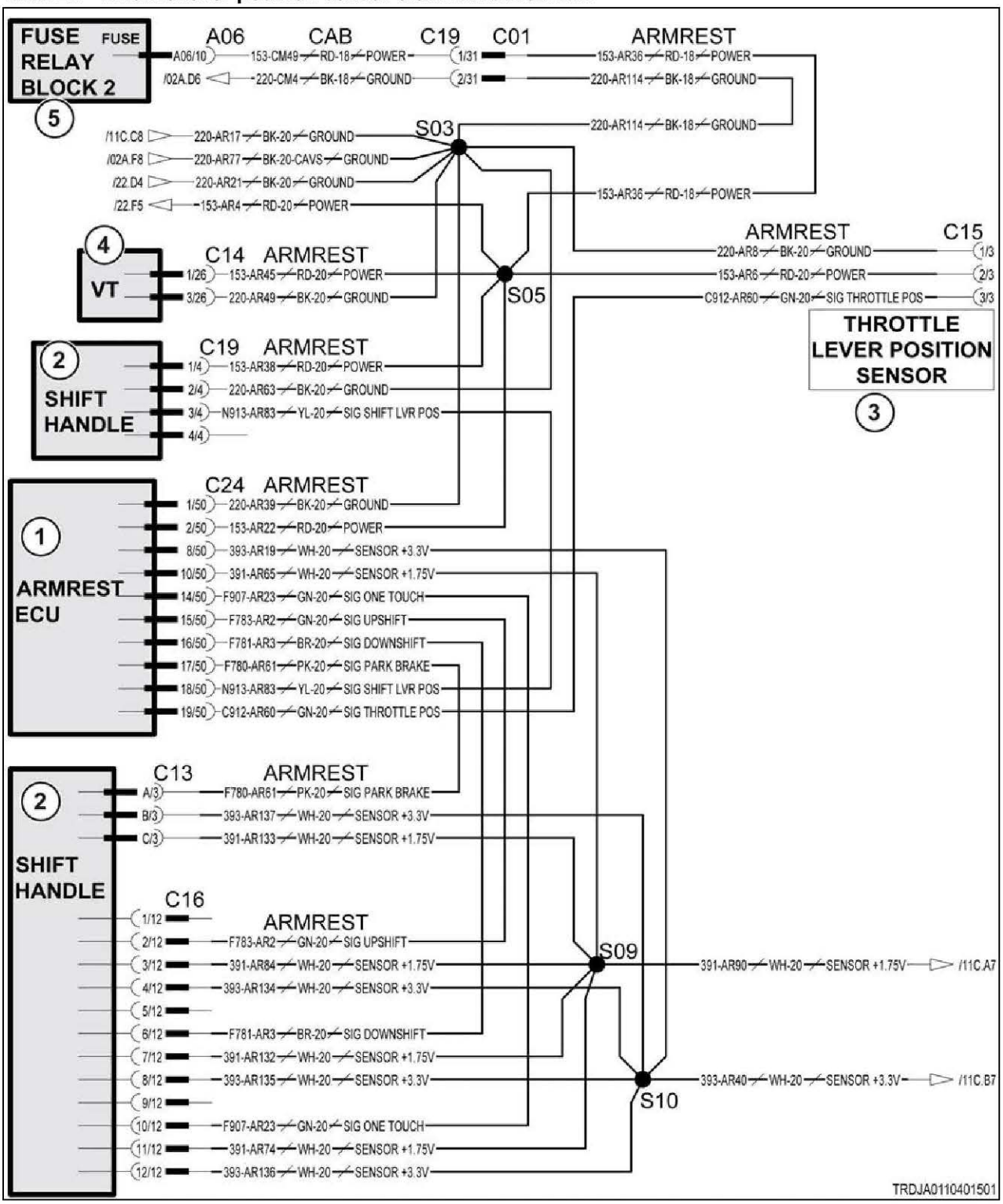

Fig. 300

Schematic legend		
Item	Schematic term	Description
1	ARMREST ECU	Armrest module
2	SHIFT HANDLE	Transmission control lever
3	THROTTLE LEVER POSITION SENSOR	Throttle lever position sensor
4	VT	Virtual terminal
5	FUSE RELAY BLOCK 2	Fuse relay block 2
--	SIG THROTTLE POS	Signal throttle position
--	SIG UPSHIFT	Signal upshift
--	SIG DOWNSHIFT	Signal downshift
--	SIG ONE TOUCH	Signal one touch
--	SIG PARK BRAKE	Signal park brake
--	SIG SHIFT LVR POSITION	Signal transmission control lever

10.7.12.2 Hand throttle

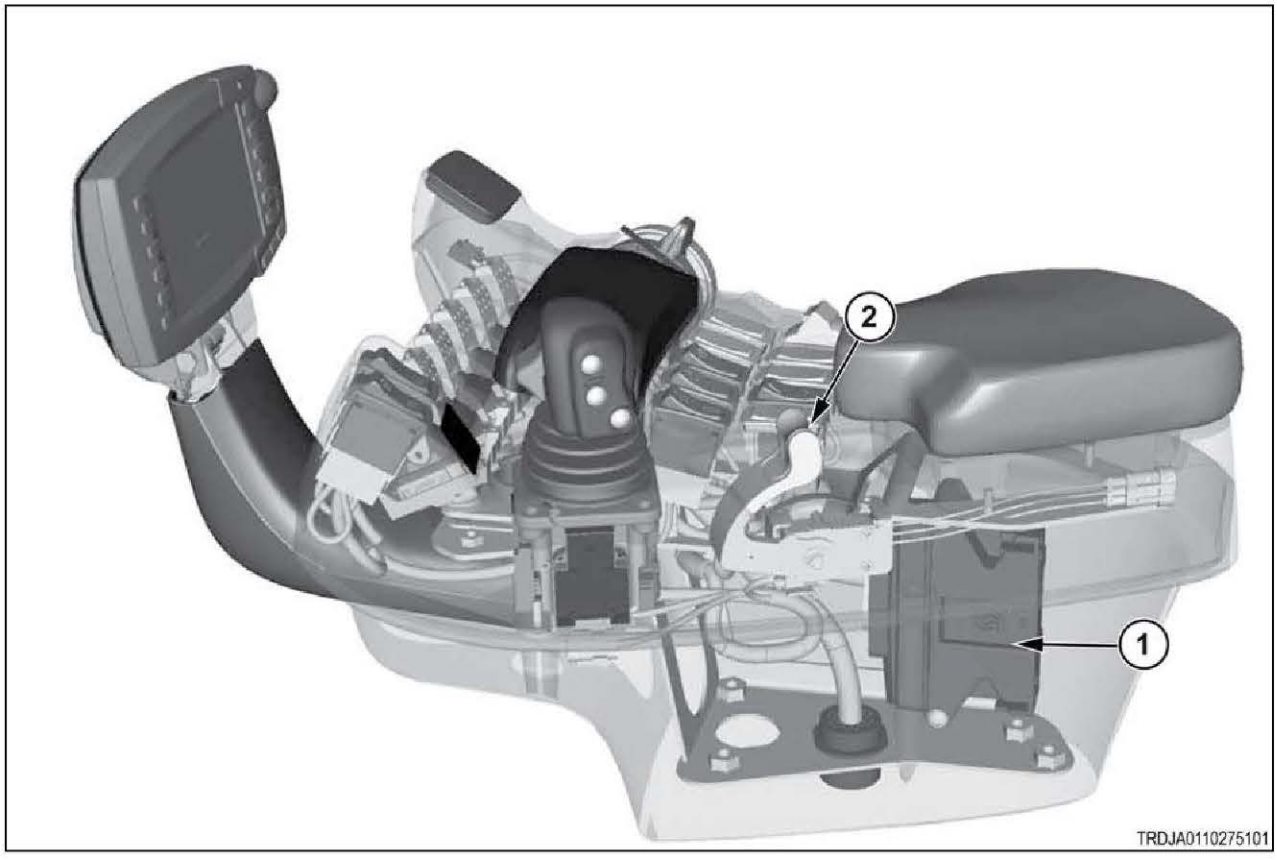

Fig. 301

(1)	Armrest module
(2)	Hand throttle

10.7.13 Code SA 05 SPN 898 FMI 01

The hand throttle lever position sensor signal is below the normal operating range.

Diagnosis and solution

1. Check sensor voltages.
   a) Leave the sensor connected.
   b) Turn the battery disconnect switch to the on position.
   c) Check the voltage between contacts 1 and 2 of the sensor connector.

      Result

      - Voltage is not at or near 12 volts.

        Repair or replace the armrest harness.

        See step 2 to validate the repair.
      - Voltage is 12 volts.

        Continue

   d) Check the voltage between contacts 2 and 3 while moving the lever through its range of motion.

      Result

      The expected voltage range is 0.5 to 4.5 volts.

      - The voltage remains in-range throughout the lever's motion.

        See step 2 to check if the error persists.
      - The voltage drops below 0.5 volts.

        Replace the sensor.

        See step 2 to validate the repair.

2. Check if the diagnostic code remains.
   a) Inspect and clean the harness connector contacts.
   b) Connect all the connectors.
   c) Turn the battery disconnect switch to the on position.
   d) Turn the key start switch to the on position.
   e) Operate the machine at low idle.
   f) Check if the diagnostic code remains.

      Result

      - SPN 898 FMI 01 is not active.

        Stop.
      - SPN 898 FMI 01 is active.

        Failure of the armrest module is possible but not common. Exit the procedure and do the procedure again. If the diagnostic code remains active, replace the module.

        Stop.

10.7.13.1 Throttle lever position sensor electrical schematic

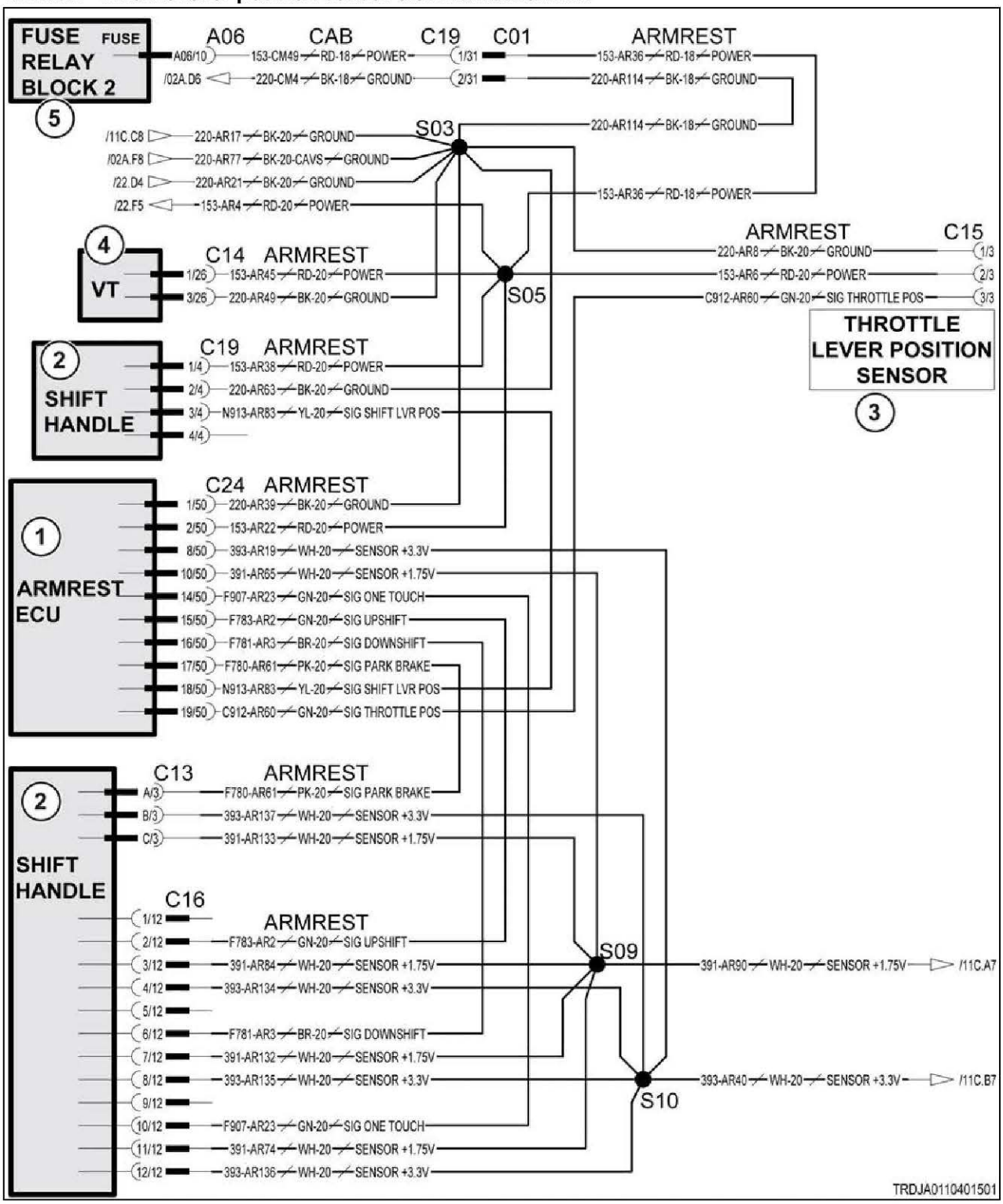

Fig. 302

Schematic legend		
Item	Schematic term	Description
1	ARMREST ECU	Armrest module
2	SHIFT HANDLE	Transmission control lever
3	THROTTLE LEVER POSITION SENSOR	Throttle lever position sensor
4	VT	Virtual terminal
5	FUSE RELAY BLOCK 2	Fuse relay block 2
--	SIG THROTTLE POS	Signal throttle position
--	SIG UPSHIFT	Signal upshift
--	SIG DOWNSHIFT	Signal downshift
--	SIG ONE TOUCH	Signal one touch
--	SIG PARK BRAKE	Signal park brake
--	SIG SHIFT LVR POSITION	Signal transmission control lever

10.7.13.2 Hand throttle

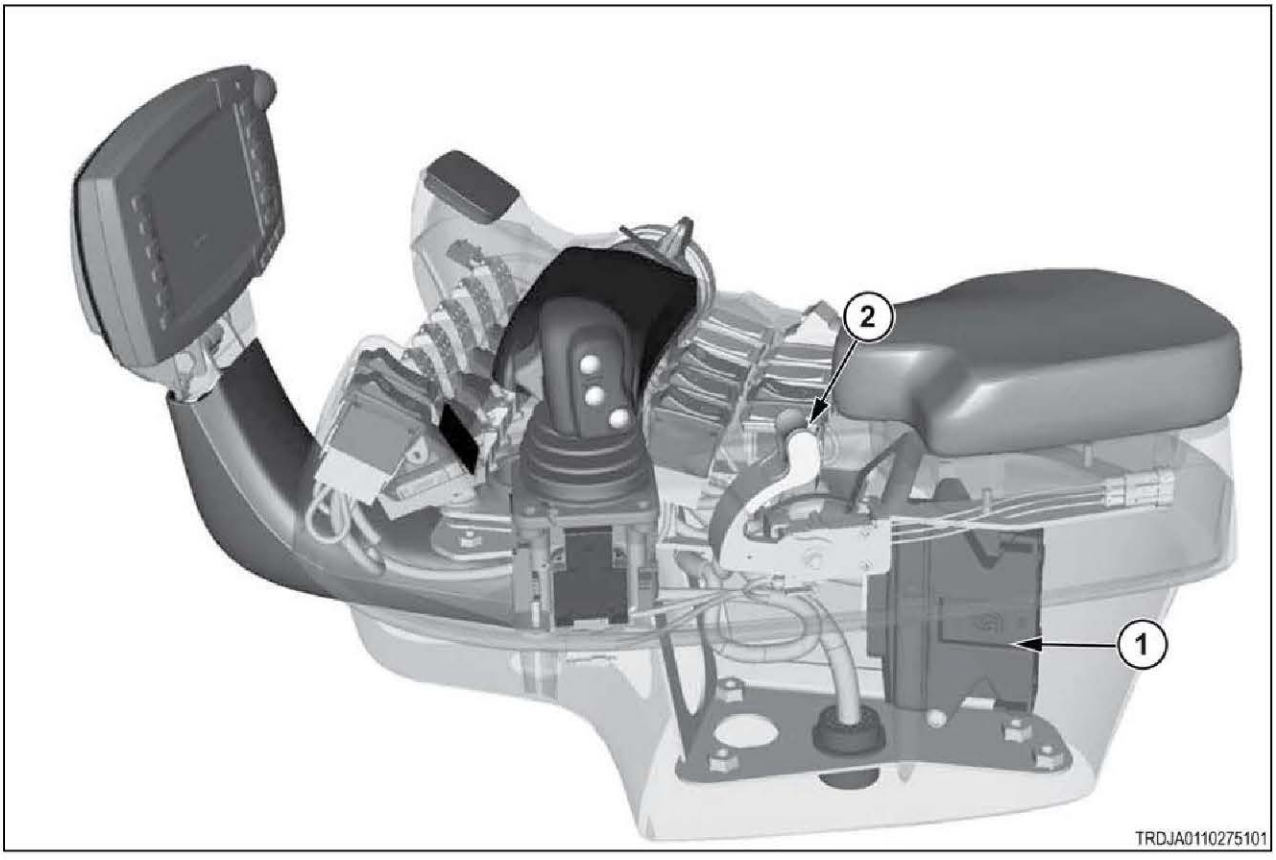

Fig. 303

(1)	Armrest module
(2)	Hand throttle

10.7.14 Code SA 05 SPN 1231 FMI 19

The armrest module is not receiving the expected information from the auxiliary CAN network.

The auxiliary CANBus is a 2-wire communication network connecting distributed modules throughout the machine. One of the requirements for this type of communication network is a 120 ohm termination resistor from CAN+ to CAN-. This termination resistor is located near the impliment valves at the rear of the machine. The absence of this resistor will cause noise on the network and slow down communication.

Diagnosis and solution

1. Check the termination resistor.

a) Turn the key start switch to the off position.

b) Turn the battery disconnect switch to the off position.

c) Disconnect the termination resistor from the harness, located at the rear impliment valves.

d) Measure the resistance from contacts A and B of the termination resistor.

Result

- The resistance is not near 120 ohms.

  Replace the termination resistor.

  See step 4 to validate the repair.
- The resistance is at or near 120 ohms.

  Continue to step 2.

2. Inspect the connector contacts.

- Look for bent or worn pins.
- Look for deformed or oversized sockets.
- Look for corrosion on the pins and sockets. Corrosion is a sign of a loose connection.
- Look for signs of overheating. Overheating is a sign of a poor connection, and can further loosen the pin or socket mount. The whole connector body should be replaced.

Result

- Faulty contacts are found.

  Repair or replace the cab harness.

  See step 4 to validate the repair.
- No faulty contacts are found.

  Reconnect the termination resistor.

  Continue to step 3.

3. Check the network resistance.

a) Check the resistance between contacts C and D at the ISO service connector (located in the main fuse panal).

b) Check the resistance between contacts C24-6 and C24-7 at the armrest module.

Result

- Both resistance measurements are at or near 120 ohms.

  See step 4 to check if the diagnostic code remains.
- Either resistance measurement is not near 120 ohms.

  Repair or replace the harness.

  See step 4 to validate the repair.

4. Check if the diagnostic code remains.

a) Inspect and clean the harness connector contacts.
b) Connect all the connectors.
c) Turn the battery disconnect switch to the on position.
d) Turn the key start switch to the on position.
e) Operate the machine at low idle.
f) Check if the diagnostic code remains.

Result

- SPN 1231 FMI 19 is not active.

  Stop.
- SPN 1231 FMI 19 is active.

  Failure of the armrest module is possible but not common. Exit the procedure and do the procedure again. If the diagnostic code remains active, replace the module.

  Stop.

10.7.14.1 CAN 2 electrical schematic

Auxiliary valve assembly

Item	Description
1	Controller
2	Proportional solenoid
3	Directional solenoid

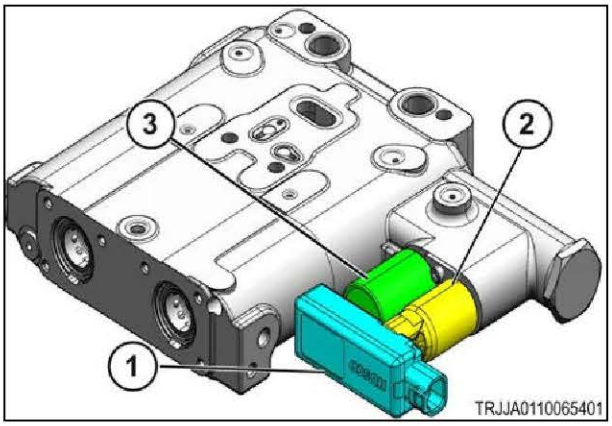

Fig. 304

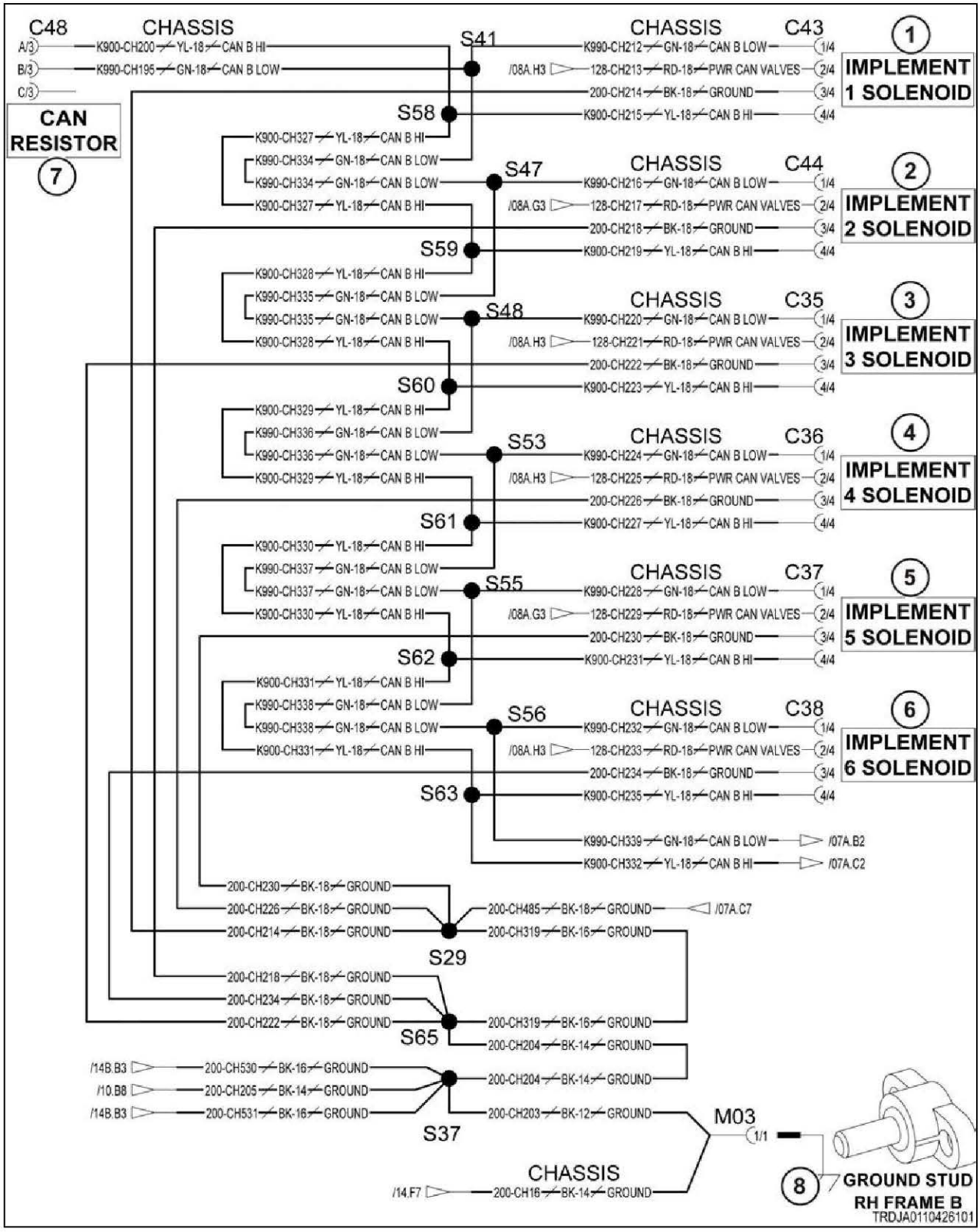
C48
CHASSIS
A/3
K900-CH200
YL-18
CAN B HI
B/3
K990-CH195
GN-18
CAN B LOW
C/3
CAN RESISTOR
7
S41
S58
S47
S59
S48
S60
S53
S61
S55
S62
S56
S63
CHASSIS
C43
K990-CH212
GN-18
CAN B LOW
1/4
/08A.H3
128-CH213
RD-18
PWR CAN VALVES
2/4
200-CH214
BK-18
GROUND
3/4
K900-CH215
YL-18
CAN B HI
4/4
1
IMPLEMENT 1 SOLENOID
CHASSIS
C44
K990-CH216
GN-18
CAN B LOW
1/4
/08A.G3
128-CH217
RD-18
PWR CAN VALVES
2/4
200-CH218
BK-18
GROUND
3/4
K900-CH219
YL-18
CAN B HI
4/4
2
IMPLEMENT 2 SOLENOID
CHASSIS
C35
K990-CH220
GN-18
CAN B LOW
1/4
/08A.H3
128-CH221
RD-18
PWR CAN VALVES
2/4
200-CH222
BK-18
GROUND
3/4
K900-CH223
YL-18
CAN B HI
4/4
3
IMPLEMENT 3 SOLENOID
CHASSIS
C36
K990-CH224
GN-18
CAN B LOW
1/4
/08A.H3
128-CH225
RD-18
PWR CAN VALVES
2/4
200-CH226
BK-18
GROUND
3/4
K900-CH227
YL-18
CAN B HI
4/4
4
IMPLEMENT 4 SOLENOID
CHASSIS
C37
K990-CH228
GN-18
CAN B LOW
1/4
/08A.G3
128-CH229
RD-18
PWR CAN VALVES
2/4
200-CH230
BK-18
GROUND
3/4
K900-CH231
YL-18
CAN B HI
4/4
5
IMPLEMENT 5 SOLENOID
CHASSIS
C38
K990-CH232
GN-18
CAN B LOW
1/4
/08A.H3
128-CH233
RD-18
PWR CAN VALVES
2/4
200-CH234
BK-18
GROUND
3/4
K900-CH235
YL-18
CAN B HI
4/4
6
IMPLEMENT 6 SOLENOID
K990-CH339
GN-18
CAN B LOW
/07A.B2
K900-CH332
YL-18
CAN B HI
/07A.C2
K900-CH327
YL-18
CAN B HI
K990-CH334
GN-18
CAN B LOW
K990-CH334
GN-18
CAN B LOW
K900-CH327
YL-18
CAN B HI
K900-CH328
YL-18
CAN B HI
K990-CH335
GN-18
CAN B LOW
K990-CH335
GN-18
CAN B LOW
K900-CH328
YL-18
CAN B HI
K900-CH329
YL-18
CAN B HI
K990-CH336
GN-18
CAN B LOW
K990-CH336
GN-18
CAN B LOW
K900-CH329
YL-18
CAN B HI
K900-CH330
YL-18
CAN B HI
K990-CH337
GN-18
CAN B LOW
K990-CH337
GN-18
CAN B LOW
K900-CH330
YL-18
CAN B HI
K900-CH331
YL-18
CAN B HI
K990-CH338
GN-18
CAN B LOW
K990-CH338
GN-18
CAN B LOW
K900-CH331
YL-18
CAN B HI
200-CH230
BK-18
GROUND
200-CH226
BK-18
GROUND
200-CH214
BK-18
GROUND
200-CH485
BK-18
GROUND
/07A.C7
200-CH319
BK-16
GROUND
S29
200-CH218
BK-18
GROUND
200-CH234
BK-18
GROUND
200-CH222
BK-18
GROUND
S65
200-CH319
BK-16
GROUND
200-CH204
BK-14
GROUND
/14B.B3
200-CH530
BK-16
GROUND
/10.B8
200-CH205
BK-14
GROUND
/14B.B3
200-CH531
BK-16
GROUND
200-CH204
BK-14
GROUND
200-CH203
BK-12
GROUND
S37
M03
1/1
8
GROUND STUD RH FRAME B
CHASSIS
/14.F7
200-CH16
BK-14
GROUND
TRDJA0110426101

Fig. 305

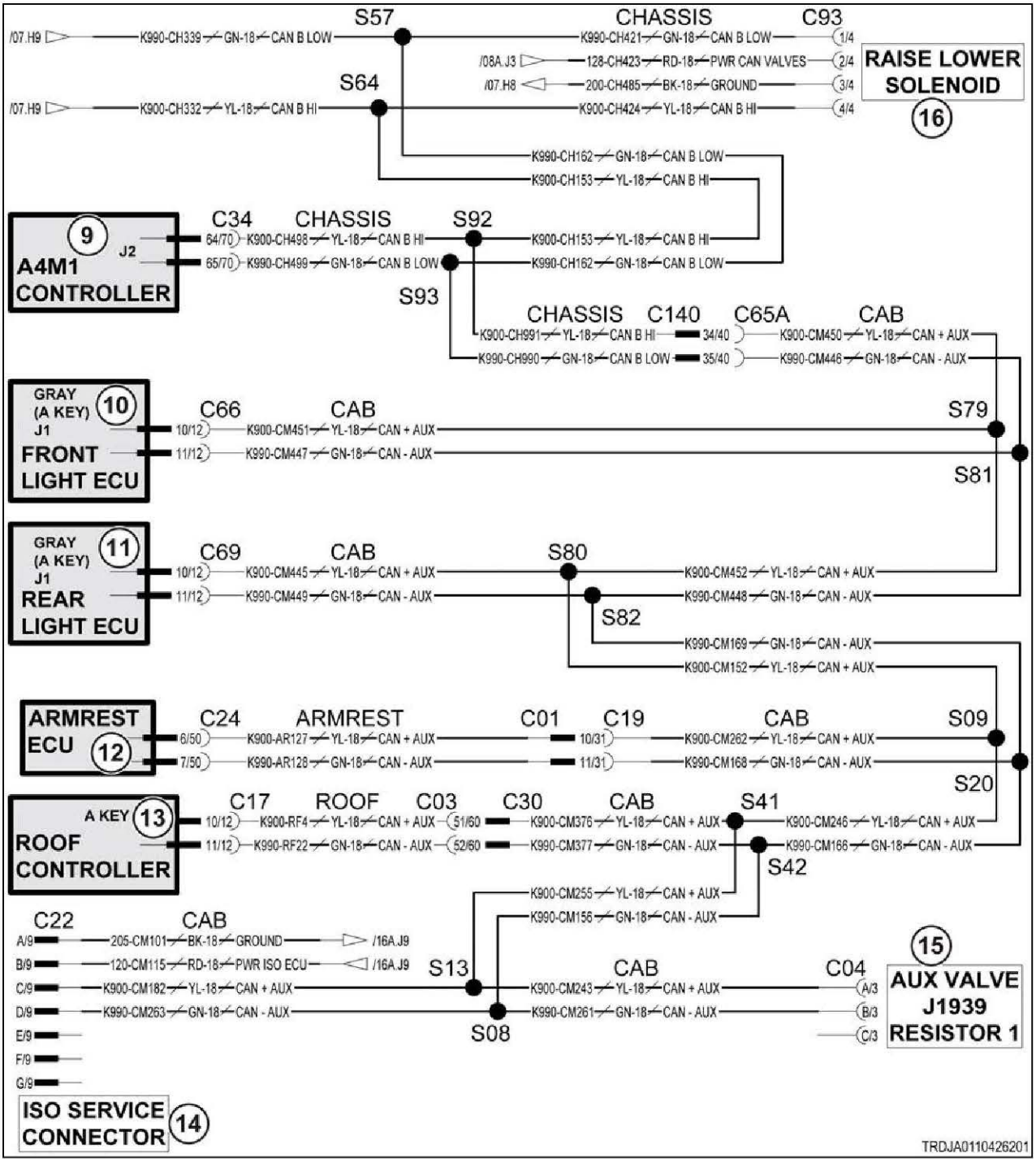

Fig. 306

Schematic legend		
Item	**Schematic term**	**Description**
1	IMPLEMENT 1 SOLENOID	Implement 1 solenoid
2	IMPLEMENT 2 SOLENOID	Implement 2 solenoid
3	IMPLEMENT 3 SOLENOID	Implement 3 solenoid
4	IMPLEMENT 4 SOLENOID	Implement 4 solenoid
5	IMPLEMENT 5 SOLENOID	Implement 5 solenoid
6	IMPLEMENT 6 SOLENOID	Implement 6 solenoid

Schematic legend		
Item	Schematic term	Description
7	CAN RESISTOR	Controller area network (CAN) terminator
8	GROUND STUD RH FRAME B	Ground stud right-hand frame B
9	A4M1 CONTROLLER	Transmission module
10	FRONT LIGHT ECU	Front lighting module
11	REAR LIGHT ECU	Rear lighting module
12	ARMREST ECU	Armrest module
13	ROOF CONTROLLER	Roof module
14	ISO SERVICE CONNECTOR	ISO service connector
15	AUX VALVE J1939 RESISTOR 1	Controller area network (CAN) terminator
16	RAISE LOWER SOLENOID	Raise/lower solenoid
--	CAN B LOW	Controller area network (CAN) B low
--	CAN B HI	Controller area network (CAN) B high
--	PWR CAN VALVES	Power controller area network (CAN) valves
--	CAN + AUX	Controller area network (CAN) high auxiliary
--	CAN - AUX	Controller area network (CAN) low auxiliary

10.7.15 Code SA 05 SPN 1504 FMI 31

The armrest module finds there is no operator present while the machine is operating.

Diagnosis and solution

1. Check for ground at the switch.

NOTE: *Connection from the cab harness to the seat is on the rear of the seat base.*

a) Turn the key start switch to the off position.
b) Turn the battery disconnect switch to the off position.
c) Remove the key from the battery disconnect switch.
d) Check resistance from seat sensor contact 6 to frame ground.

Result

Expected result - resistance is less than 5 ohms.

Results:

- Yes - resistance is less than 5 ohms.
- No - resistance is not less than 5 ohms.

  Repair or replace the harness.

2. Check the switch harness for an open circuit.

a) Turn the key start switch to the off position.
b) Turn the battery disconnect switch to the off position.
c) Remove the key from the battery disconnect switch.
d) Disconnect the harness from the switch.
e) Disconnect the harness connectors from the armrest module.
f) Check resistance between switch contact 5 and armrest module contact 20.

Result

Expected result - resistance is less than 5 ohms.

Results:

- Yes - resistance is less than 5 ohms.
- No - resistance is not less than 5 ohms.

  Repair or replace the harness.

3. Check the operation of the switch.

a) Turn the key start switch to the off position.
b) Turn the battery disconnect switch to the off position.
c) Remove the key from the battery disconnect switch.
d) Connect the harness to the switch.
e) Check resistance from seat sensor contact 5 to contact 6 with no one sitting in the seat.
f) Check resistance from seat sensor contact 5 to contact 6 while a person sits in the seat.

Result

Expected results -

With no one sitting in the seat, resistance is more than 5000 ohms.

While person sits in the seat, resistance is less than 5 ohms.

Results:

- Yes - values are correct.
- No - values are not correct.

  Replace the switch.

4. Check if the diagnostic code remains.

a) Inspect and clean the harness connector contacts.
b) Connect all the connectors.
c) Turn the battery disconnect switch to the on position.
d) Turn the key start switch to the on position.
e) Operate the machine at low idle.
f) Check if the diagnostic code remains.

Result

Expected result - the diagnostic code is not active.

Results:

- Yes - SPN 1504 FMI 31 is not active.

  Stop.
- No - SPN 1504 FMI 31 is active.

  Failure of the armrest module is possible but not common. Exit the procedure and do the procedure again. If the diagnostic code remains active, replace the module.

  Stop.

10.7.15.1 Switch group electrical schematic

Armrest switches

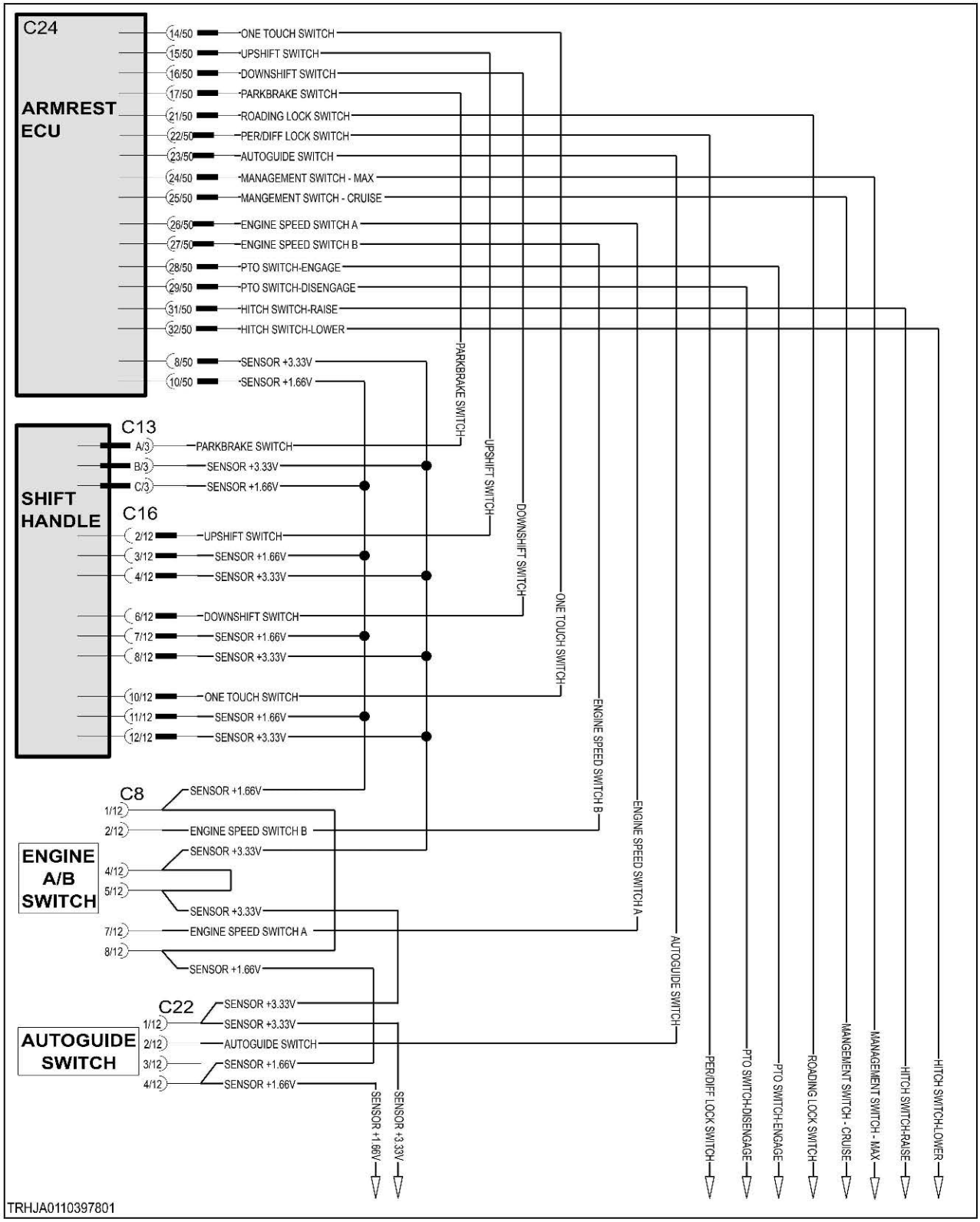

Fig. 307

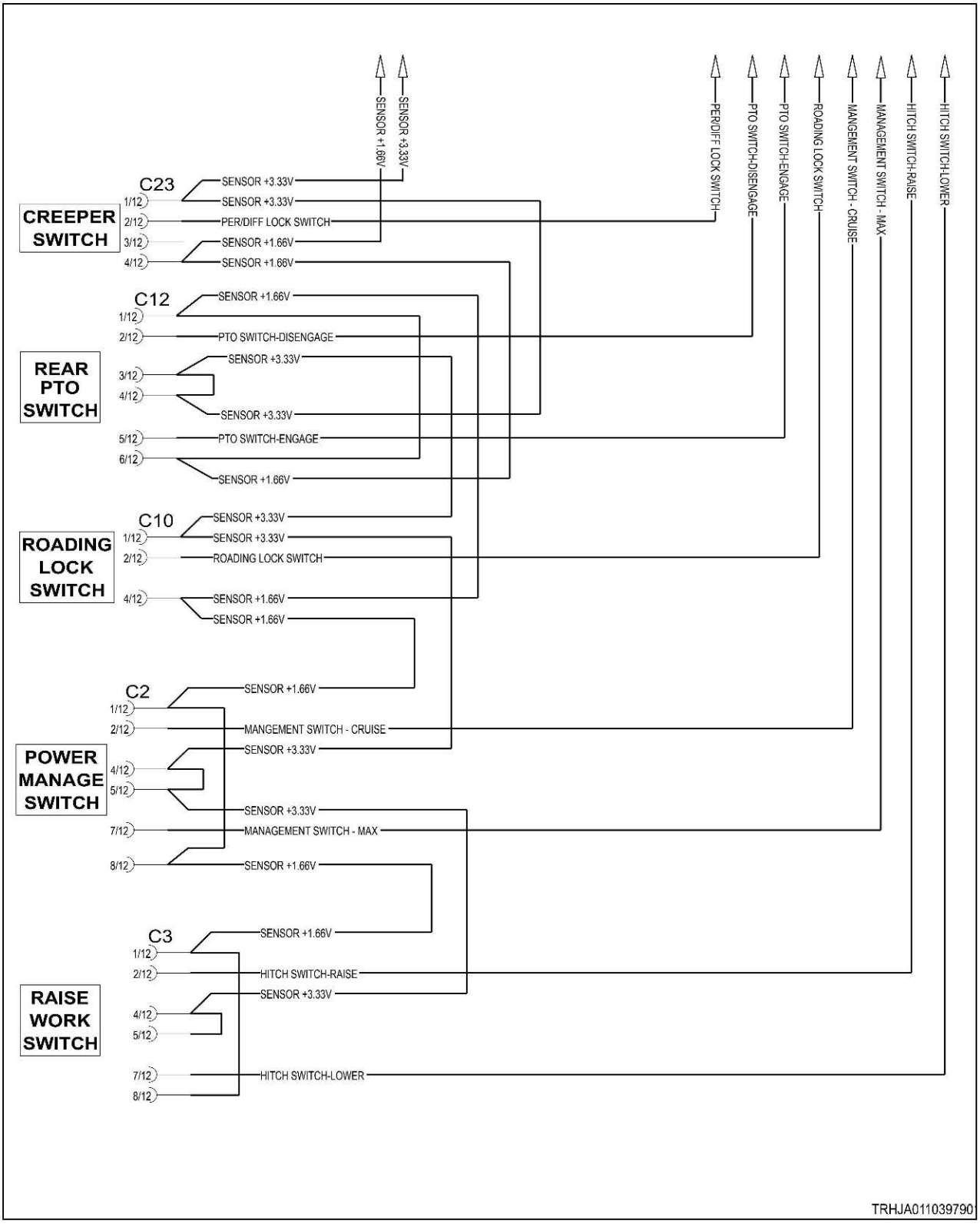
SENSOR +1.66V
SENSOR +3.33V
PER/DIFF LOCK SWITCH
PTO SWITCH-DISENGAGE
PTO SWITCH-ENGAGE
ROADING LOCK SWITCH
MANGEMENT SWITCH - CRUISE
MANAGEMENT SWITCH - MAX
HITCH SWITCH-RAISE
HITCH SWITCH-LOWER
CREEPER SWITCH
C23
1/12
2/12
3/12
4/12
SENSOR +3.33V
SENSOR +3.33V
PER/DIFF LOCK SWITCH
SENSOR +1.66V
SENSOR +1.66V
C12
REAR PTO SWITCH
1/12
2/12
3/12
4/12
5/12
6/12
SENSOR +1.66V
PTO SWITCH-DISENGAGE
SENSOR +3.33V
SENSOR +3.33V
PTO SWITCH-ENGAGE
SENSOR +1.66V
C10
ROADING LOCK SWITCH
1/12
2/12
4/12
SENSOR +3.33V
SENSOR +3.33V
ROADING LOCK SWITCH
SENSOR +1.66V
SENSOR +1.66V
C2
POWER MANAGE SWITCH
1/12
2/12
4/12
5/12
7/12
8/12
SENSOR +1.66V
MANGEMENT SWITCH - CRUISE
SENSOR +3.33V
SENSOR +3.33V
MANAGEMENT SWITCH - MAX
SENSOR +1.66V
C3
RAISE WORK SWITCH
1/12
2/12
4/12
5/12
7/12
8/12
SENSOR +1.66V
HITCH SWITCH-RAISE
SENSOR +3.33V
HITCH SWITCH-LOWER
TRHJA011039790

Fig. 308

10.7.15.2 Operator present switch

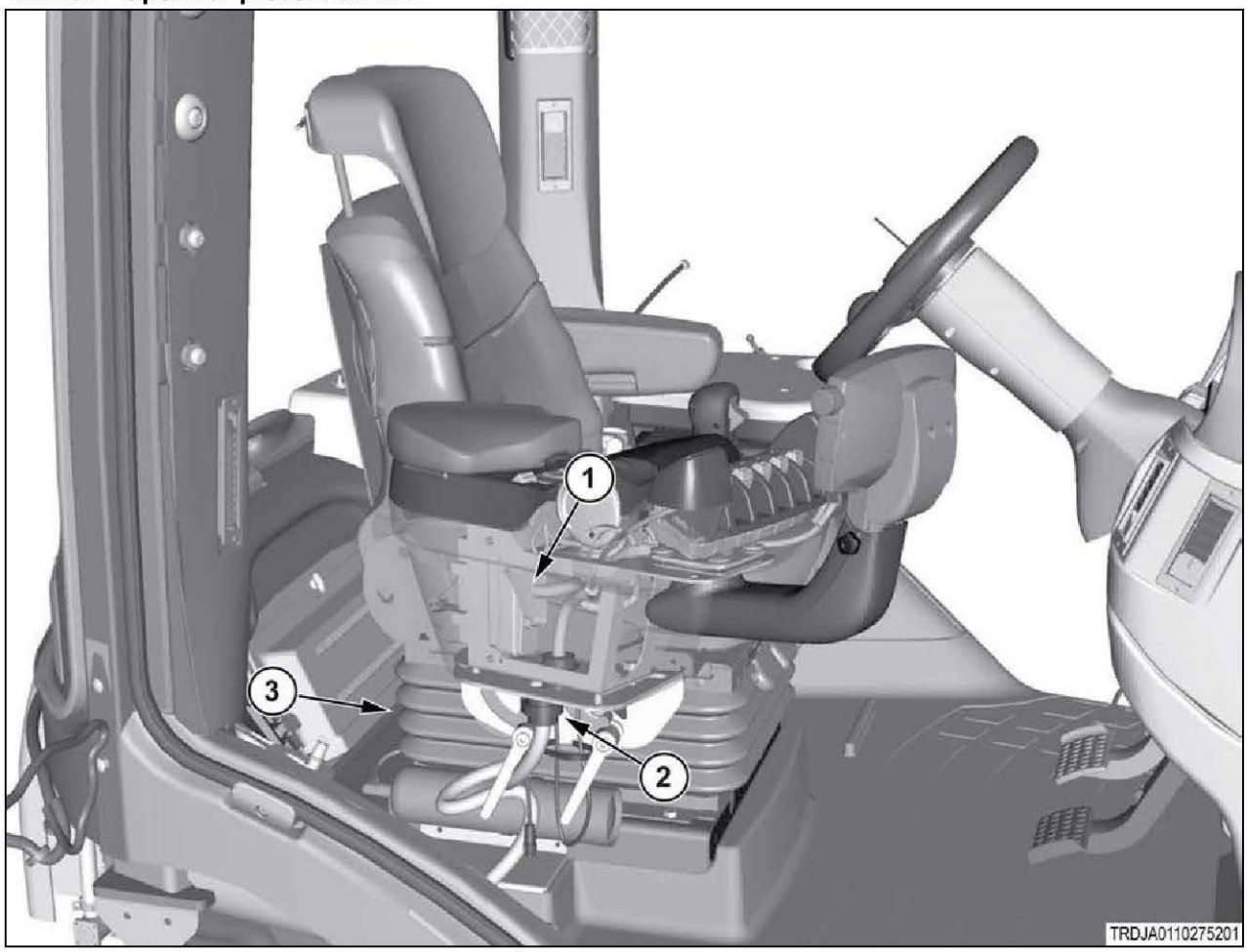

Fig. 309

(1)	Armrest module
(2)	Armrest harness to cab harness connection
(3)	Connection to the seat

10.7.16 Code SA 05 SPN 1787 FMI 03

The power management, maximum power switch signal voltage is above normal.

The signal voltage is higher than the 3.33-volt supply. The most likely cause is a short circuit to a higher voltage circuit.

The switch is a momentary double-pole, double-throw (DPDT) type switch, except the "common" terminal is the data output instead of a power source. The 4 other contacts are connected to 3.33-volt power and 1.66-volt power. Operating the switch selects one of these voltages for the signal output. This error will likely be accompanied by a power supply error too. This information can be used to isolate the cause.

Diagnosis and solution

1. Determine when this error is reported.
   a) Turn the key start switch to the on position.
   b) Check for this error code (SA 05 SPN 1787 FMI 03) as you operate the switch between the center position and maximum power on position.

      Note that power supply errors will likely also be reported, as noted below.

Result

- The error is reported only when the switch is in the center position.

  Error code SA 05 SPN 3511 FMI 03 (3.33V power) is likely also reported.

  Diagnose the power supply error code first.

  Stop.
- The error is reported only when the switch is in the on position.

  Error code SA 05 SPN 3510 FMI 03 (1.66V power) is likely also reported.

  Diagnose the power supply error code first.

  Stop.
- The error is reported regardless of switch position.

  The signal wire is shorted to some voltage source.

  Repair or replace the harness.

  See step 2 to validate the repair.

2. Check if the diagnostic code remains.

a) Inspect and clean the harness connector contacts.
b) Connect all the connectors.
c) Turn the battery disconnect switch to the on position.
d) Turn the key start switch to the on position.
e) Operate the machine at low idle.
f) Check if the diagnostic code remains.

Result

- SPN 1787 FMI 03 is not active.

  Stop.
- SPN 1787 FMI 03 is active.

  Failure of the armrest module is possible but not common. Exit the procedure and do the procedure again. If the diagnostic code remains active, replace the module.

  Stop.

10.7.16.1 Switch group electrical schematic

Armrest switches

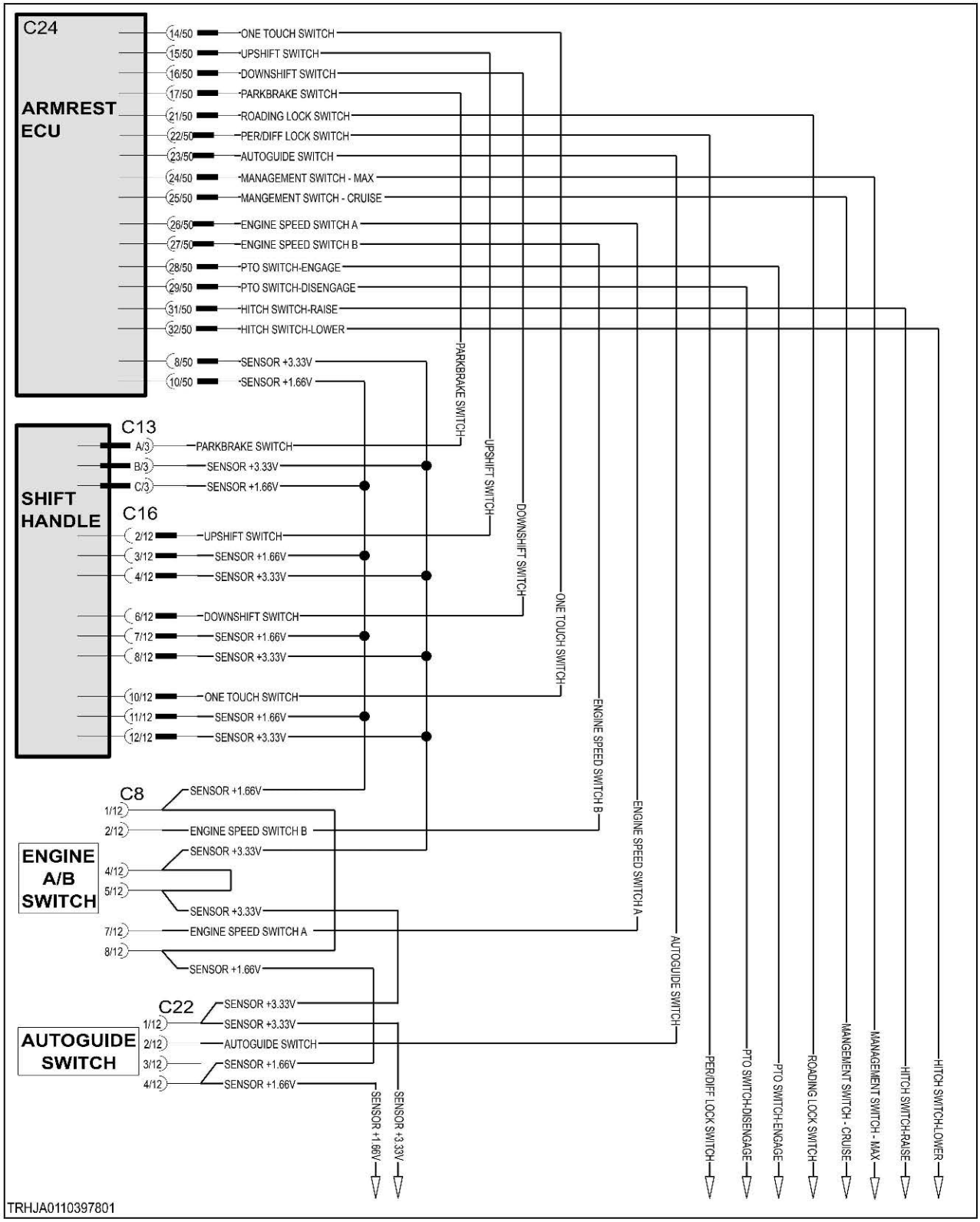

Fig. 310

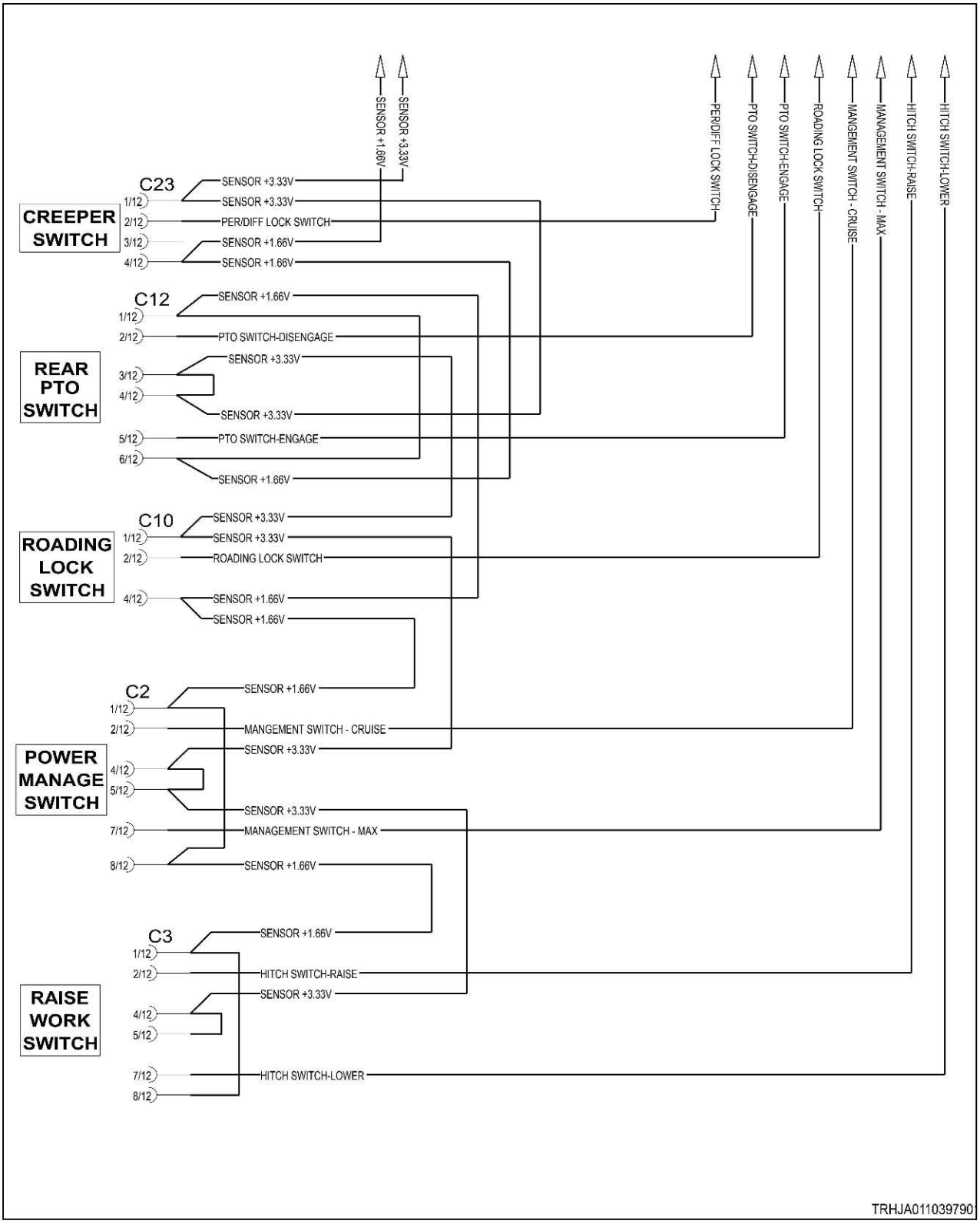
SENSOR +1.66V
SENSOR +3.33V
PER/DIFF LOCK SWITCH
PTO SWITCH-DISENGAGE
PTO SWITCH-ENGAGE
ROADING LOCK SWITCH
MANGEMENT SWITCH - CRUISE
MANAGEMENT SWITCH - MAX
HITCH SWITCH-RAISE
HITCH SWITCH-LOWER
CREEPER SWITCH
C23
1/12
2/12
3/12
4/12
SENSOR +3.33V
SENSOR +3.33V
PER/DIFF LOCK SWITCH
SENSOR +1.66V
SENSOR +1.66V
C12
REAR PTO SWITCH
1/12
2/12
3/12
4/12
5/12
6/12
SENSOR +1.66V
PTO SWITCH-DISENGAGE
SENSOR +3.33V
SENSOR +3.33V
PTO SWITCH-ENGAGE
SENSOR +1.66V
C10
ROADING LOCK SWITCH
1/12
2/12
4/12
SENSOR +3.33V
SENSOR +3.33V
ROADING LOCK SWITCH
SENSOR +1.66V
SENSOR +1.66V
C2
POWER MANAGE SWITCH
1/12
2/12
4/12
5/12
7/12
8/12
SENSOR +1.66V
MANGEMENT SWITCH - CRUISE
SENSOR +3.33V
SENSOR +3.33V
MANAGEMENT SWITCH - MAX
SENSOR +1.66V
C3
RAISE WORK SWITCH
1/12
2/12
4/12
5/12
7/12
8/12
SENSOR +1.66V
HITCH SWITCH-RAISE
SENSOR +3.33V
HITCH SWITCH-LOWER
TRHJA011039790

Fig. 311

10.7.16.2 Maximum power switch



Fig. 312 Switch pinout

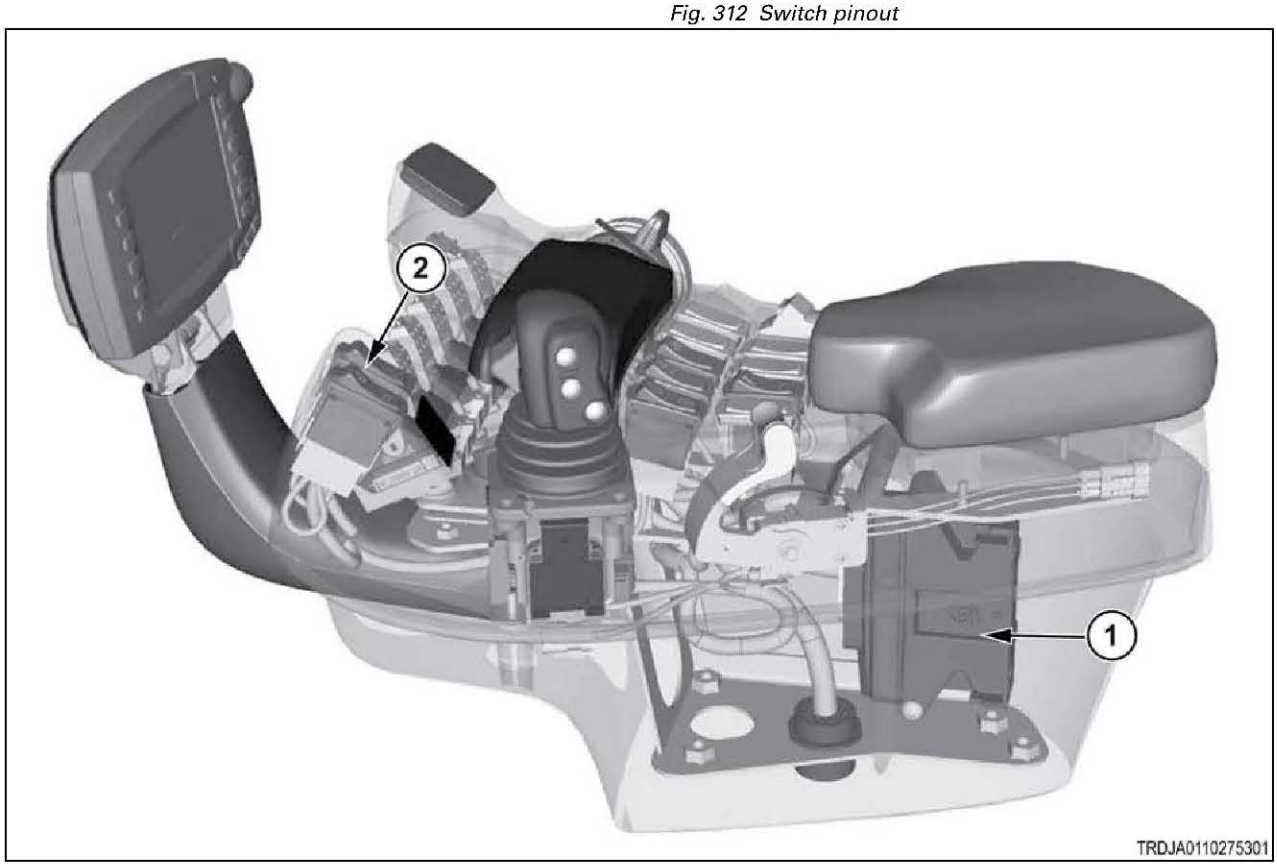

Fig. 313

(1)	Armrest module
(2)	Maximum power switch

10.7.17 Code SA 05 SPN 1787 FMI 04

The power management, maximum power switch signal voltage is below normal.

The signal voltage is lower than the 1.66-volt supply. The most likely cause is a short circuit to ground.

The switch is a momentary double-pole, double-throw (DPDT) type switch, except the "common" terminal is the data output instead of a power source. The 4 other contacts are connected to 3.33-volt power and 1.66-volt power. Operating the switch selects one of these voltages for the signal output. One set of contacts is for cruise control, and the other set is for maximum power. This error will likely be accompanied by a power supply error too. This information can be used to isolate the cause.

Diagnosis and solution

1. Determine when this error is reported.

a) Turn the key start switch to the on position.

b) Check for this error code (SA 05 SPN 1787 FMI 04) as you operate the switch between the center position and maximum power on position.

Note that power supply errors will likely also be reported, as noted below.

Result

- The error is reported only when the switch is in the center position.

  Error code SA 05 SPN 3511 FMI 04 (3.33V power) is likely also reported.

  Diagnose the power supply error code first.

  Stop.
- The error is reported only when the switch is in the on position.

  Error code SA 05 SPN 3510 FMI 04 (1.66V power) is likely also reported.

  Diagnose the power supply error code first.

  Stop.
- The error is reported regardless of switch position.

  The signal wire is shorted to ground.

  Repair or replace the harness.

  See step 2 to validate the repair.

2. Check if the diagnostic code remains.

a) Inspect and clean the harness connector contacts.

b) Connect all the connectors.

c) Turn the battery disconnect switch to the on position.

d) Turn the key start switch to the on position.

e) Operate the machine at low idle.

f) Check if the diagnostic code remains.

Result

- SPN 1787 FMI 04 is not active.

  Stop.
- SPN 1787 FMI 04 is active.

  Failure of the armrest module is possible but not common. Exit the procedure and do the procedure again. If the diagnostic code remains active, replace the module.

  Stop.

10.7.17.1 Switch group electrical schematic

Armrest switches

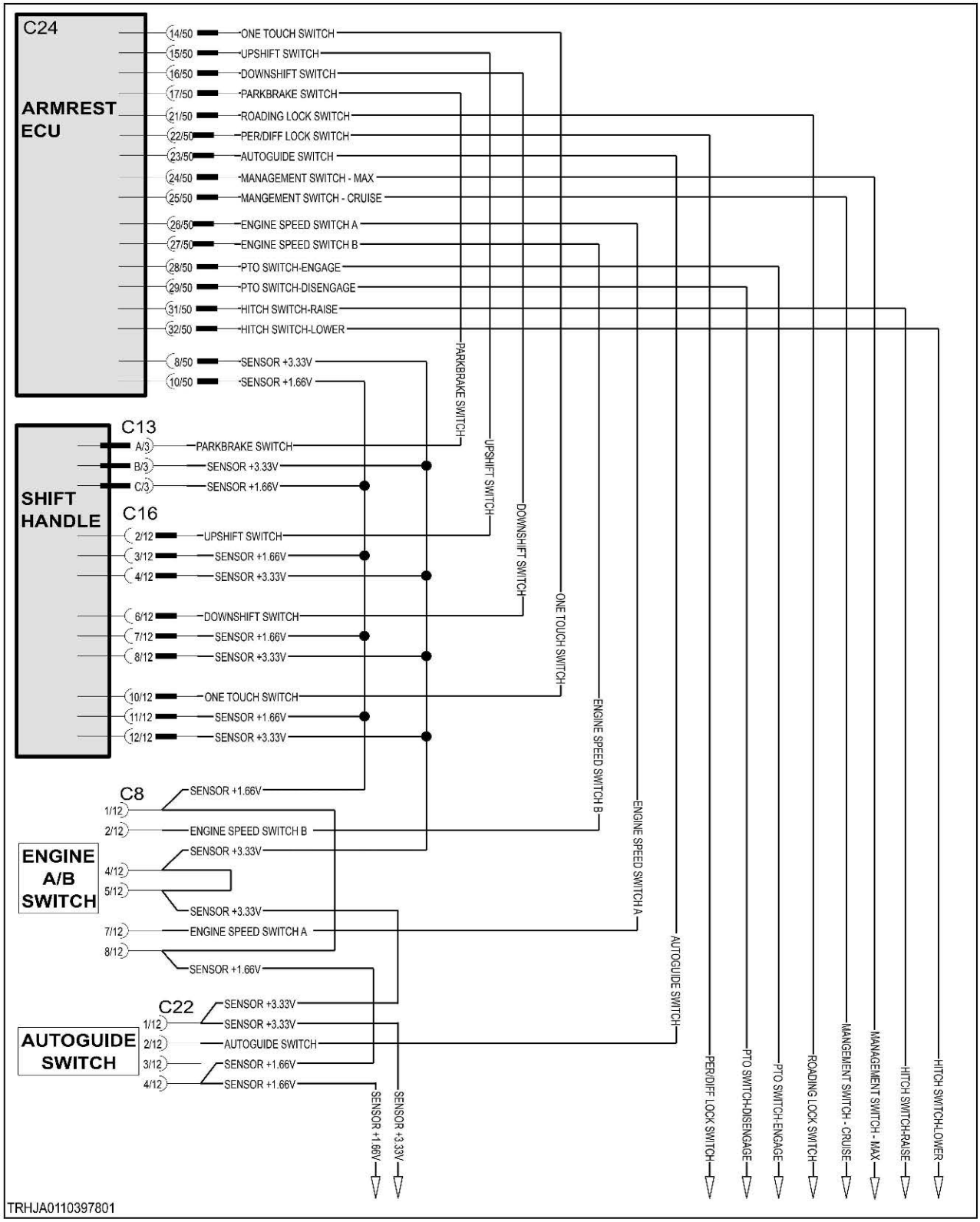

Fig. 314

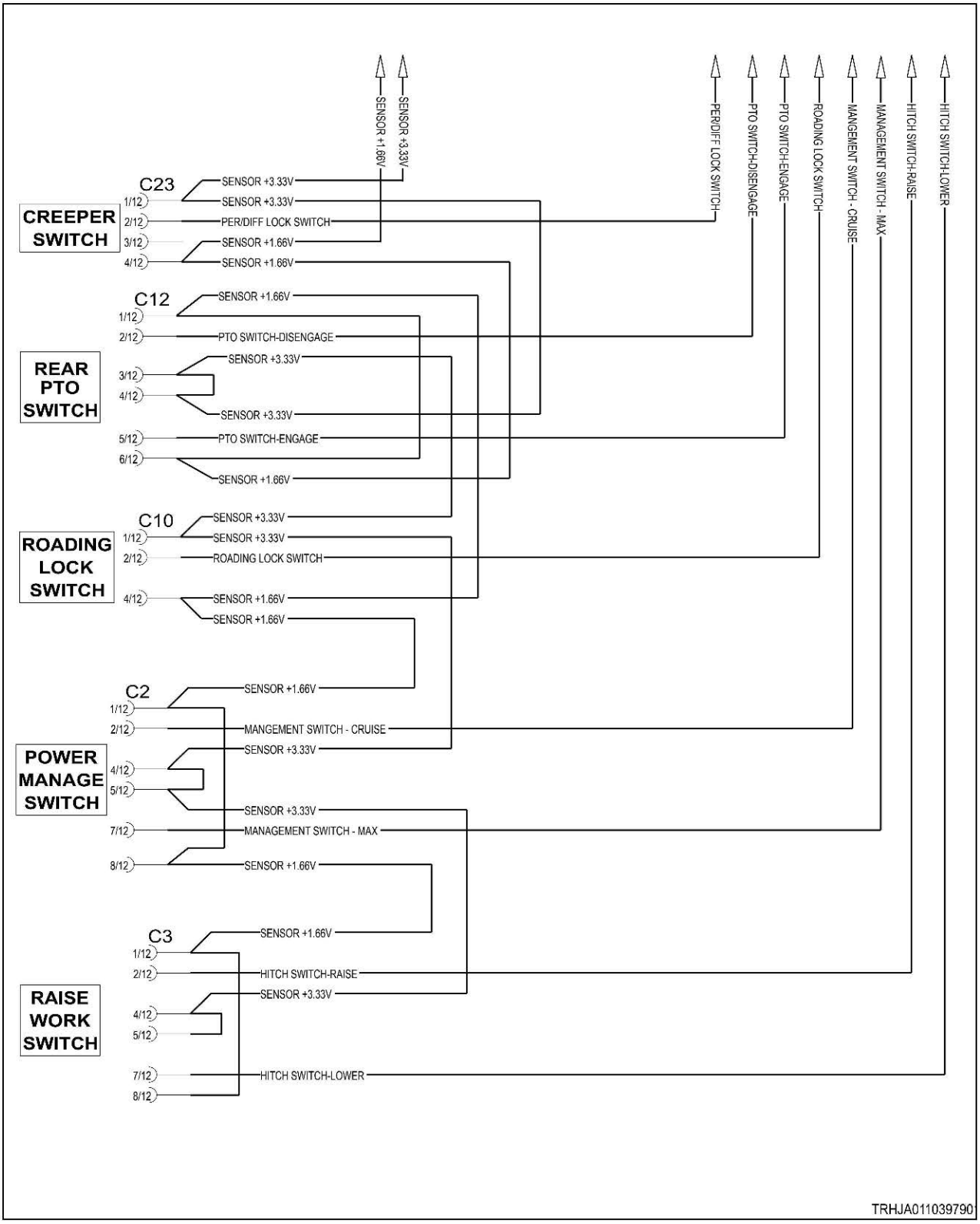
SENSOR +1.66V
SENSOR +3.33V
PER/DIFF LOCK SWITCH
PTO SWITCH-DISENGAGE
PTO SWITCH-ENGAGE
ROADING LOCK SWITCH
MANGEMENT SWITCH - CRUISE
MANAGEMENT SWITCH - MAX
HITCH SWITCH-RAISE
HITCH SWITCH-LOWER
C23
1/12
2/12
3/12
4/12
CREEPER SWITCH
SENSOR +3.33V
SENSOR +3.33V
PER/DIFF LOCK SWITCH
SENSOR +1.66V
SENSOR +1.66V
C12
1/12
2/12
3/12
4/12
5/12
6/12
REAR PTO SWITCH
SENSOR +1.66V
PTO SWITCH-DISENGAGE
SENSOR +3.33V
SENSOR +3.33V
PTO SWITCH-ENGAGE
SENSOR +1.66V
C10
1/12
2/12
4/12
ROADING LOCK SWITCH
SENSOR +3.33V
SENSOR +3.33V
ROADING LOCK SWITCH
SENSOR +1.66V
SENSOR +1.66V
C2
1/12
2/12
4/12
5/12
7/12
8/12
POWER MANAGE SWITCH
SENSOR +1.66V
MANGEMENT SWITCH - CRUISE
SENSOR +3.33V
SENSOR +3.33V
MANAGEMENT SWITCH - MAX
SENSOR +1.66V
C3
1/12
2/12
4/12
5/12
7/12
8/12
RAISE WORK SWITCH
SENSOR +1.66V
HITCH SWITCH-RAISE
SENSOR +3.33V
HITCH SWITCH-LOWER
TRHJA011039790

Fig. 315

10.7.17.2 Maximum power switch



Fig. 316 Switch pinout

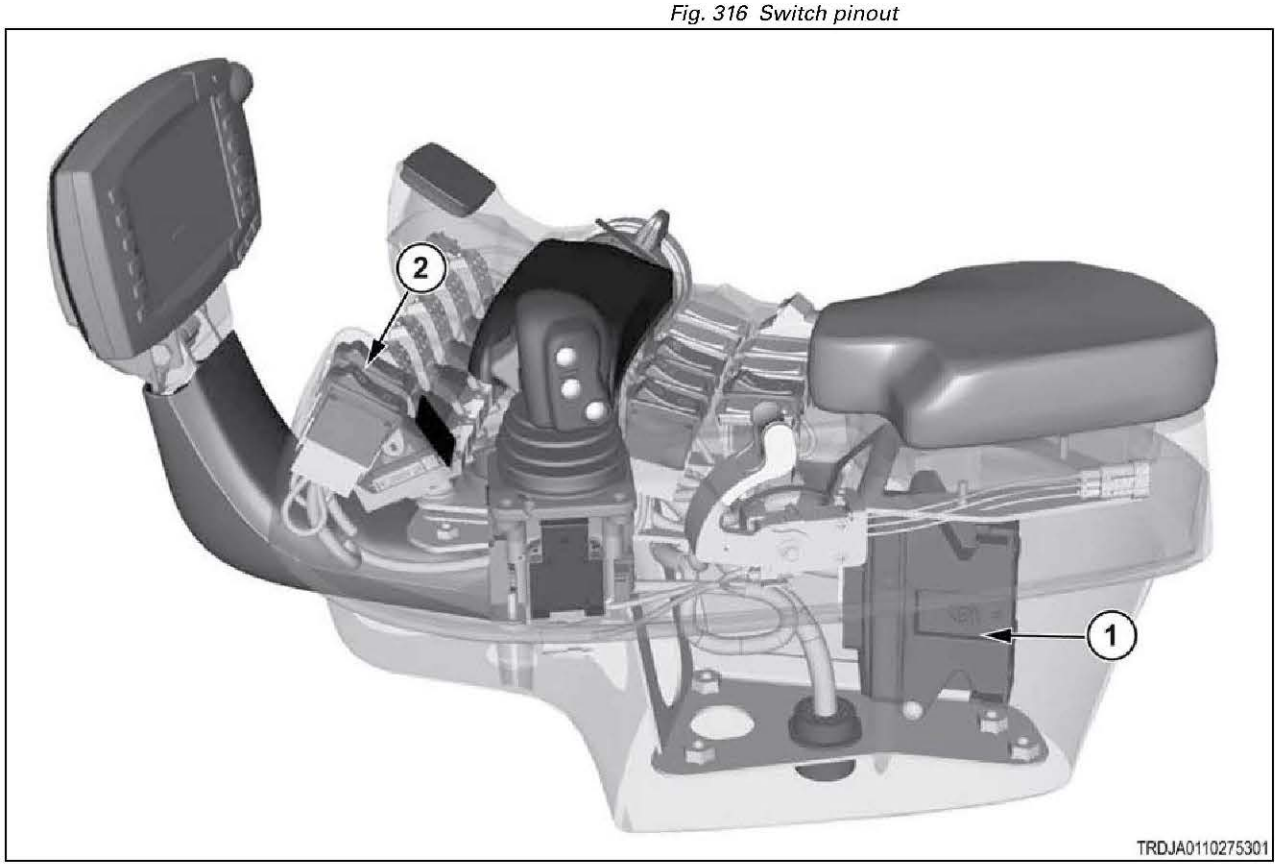

Fig. 317

(1)	Armrest module
(2)	Maximum power switch

10.7.18 Code SA 05 SPN 1787 FMI 05

Open circuit in the power management, maximum power switch circuit.

The switch is a momentary double-pole, double-throw (DPDT) type switch, except the "common" terminal is the data output instead of a power source. The 4 other contacts are connected to 3.33-volt power and 1.66-volt power. Operating the switch selects one of these voltages for the signal output. One set of contacts is for cruise control, and the other set is for maximum power. These 2 power circuits are shared by several other function switches on the armrest. This knowledge can aid in diagnosing the fault.

Diagnosis and solution

1. Determine when this error is reported.

a) Turn the key start switch to the on position.

b) Check whether the error code is reported as you operate the switch between on and off states.

Result

- The error is reported only when the switch is in the off position.

  The open circuit is in the 3.33V power circuit.

  See step 2 to isolate the location.
- The error is reported only when the switch is in the on position.

  The open circuit is in the 1.66V power circuit.

  See step 2 to isolate the location.
- The error is reported regardless of switch position.

  The open circuit is in the signal circuit.

  Repair or replace the armrest harness.

  See step 3 to validate the repair.

2. Isolate the power circuit open circuit.

a) Operate all upstream (and at least one downstream) armrest switches, according to the list below, from their off to on positions.

Electrical sequence of switches, starting from the armrest module.

1. Shift Handle (3 pushbuttons)
2. Engine A/B switch
3. Autoguide switch
4. Creeper switch
5. Rear PTO
6. Roading Lock switch
7. Power management (cruise/full) switch
8. Hitch Raise/Work switch

b) Observe which other switches (if any) exhibit similar open circuit error codes.

Result

- At least one upstream switch reported a similar error.

  The open circuit lies at, or just upstream from, that switch.

  Repair or replace the armrest harness.

  See step 3 to validate the repair.

- Only downstream switches reported similar errors.

  The harness is open circuited at this switch location.

  Repair or replace the harness.

  See step 3 to validate the repair.
- No other switches reported similar errors.

  The switch is at fault.

  Replace the switch.

  See step 3 to validate the repair.

3. Check if the fault code remains.

a) Inspect and clean the harness connector contacts.
b) Connect all the connectors.
c) Turn the battery disconnect switch to the on position.
d) Turn the key start switch to the on position.
e) Operate the machine at low idle.
f) Check if the fault code remains.

Result

- SPN 1787 FMI 05 is not active.

  Stop.
- SPN 1787 FMI 05 is active.

  Failure of the armrest module is possible but not common. Exit the procedure and do the procedure again. If the fault code remains active, replace the armrest module.

  Stop.

10.7.18.1 Switch group electrical schematic

Armrest switches

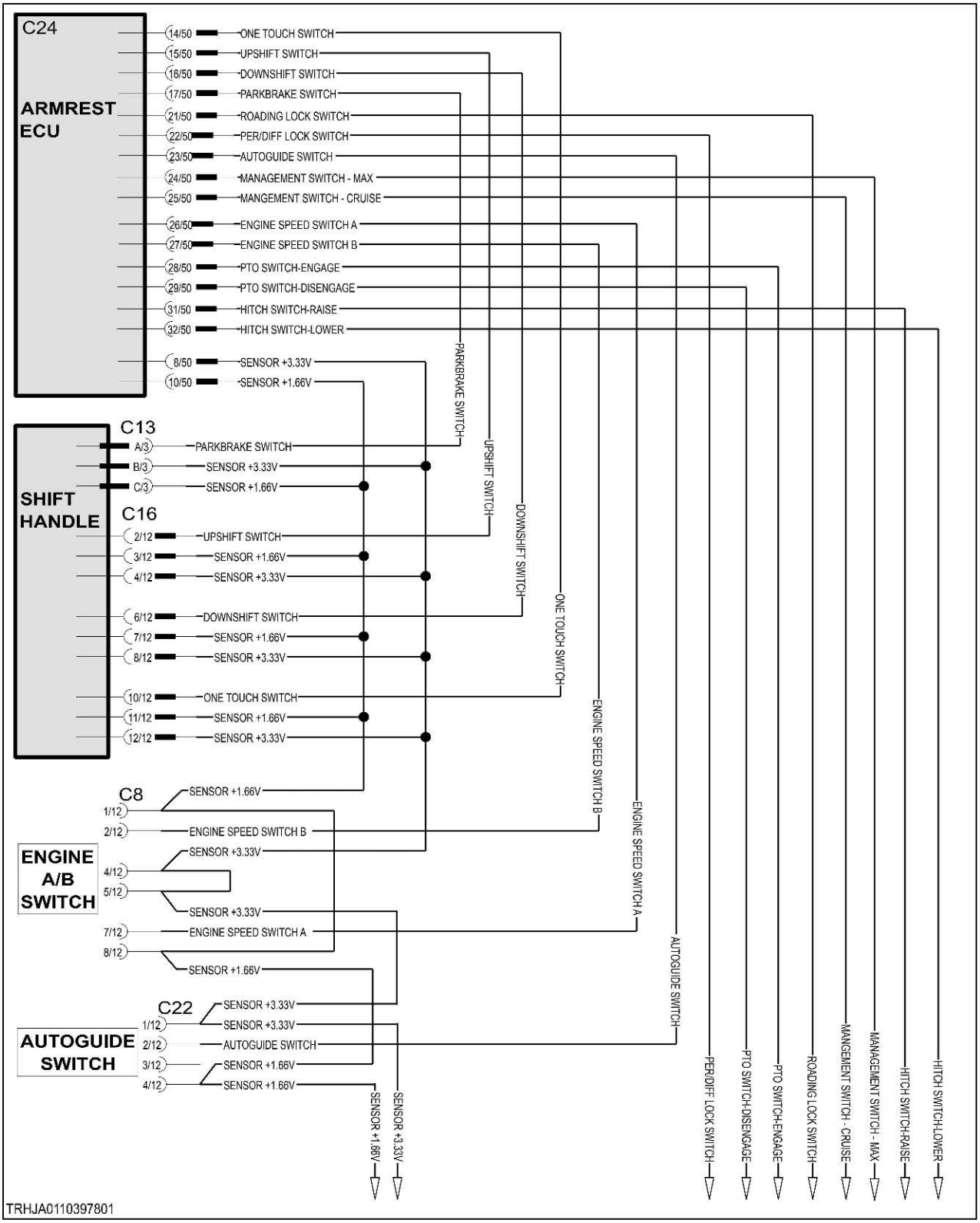

Fig. 318

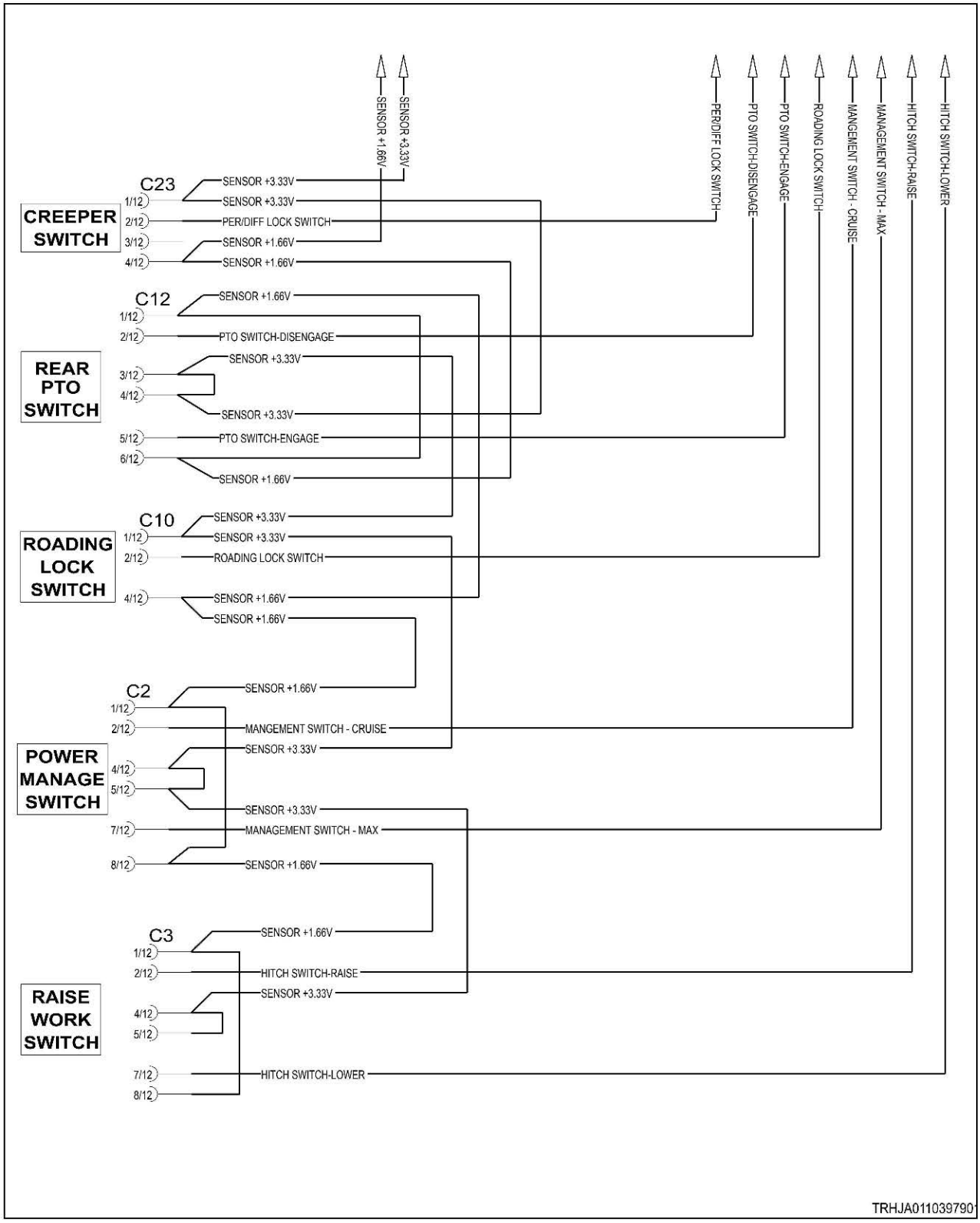
SENSOR +1.66V
SENSOR +3.33V
PER/DIFF LOCK SWITCH
PTO SWITCH-DISENGAGE
PTO SWITCH-ENGAGE
ROADING LOCK SWITCH
MANGEMENT SWITCH - CRUISE
MANAGEMENT SWITCH - MAX
HITCH SWITCH-RAISE
HITCH SWITCH-LOWER
CREEPER SWITCH
C23
1/12
2/12
3/12
4/12
SENSOR +3.33V
SENSOR +3.33V
PER/DIFF LOCK SWITCH
SENSOR +1.66V
SENSOR +1.66V
REAR PTO SWITCH
C12
1/12
2/12
3/12
4/12
5/12
6/12
SENSOR +1.66V
PTO SWITCH-DISENGAGE
SENSOR +3.33V
SENSOR +3.33V
PTO SWITCH-ENGAGE
SENSOR +1.66V
ROADING LOCK SWITCH
C10
1/12
2/12
4/12
SENSOR +3.33V
SENSOR +3.33V
ROADING LOCK SWITCH
SENSOR +1.66V
SENSOR +1.66V
POWER MANAGE SWITCH
C2
1/12
2/12
4/12
5/12
7/12
8/12
SENSOR +1.66V
MANGEMENT SWITCH - CRUISE
SENSOR +3.33V
SENSOR +3.33V
MANAGEMENT SWITCH - MAX
SENSOR +1.66V
RAISE WORK SWITCH
C3
1/12
2/12
4/12
5/12
7/12
8/12
SENSOR +1.66V
HITCH SWITCH-RAISE
SENSOR +3.33V
HITCH SWITCH-LOWER
TRHJA011039790

Fig. 319

10.7.18.2 Maximum power switch



Fig. 320 Switch pinout

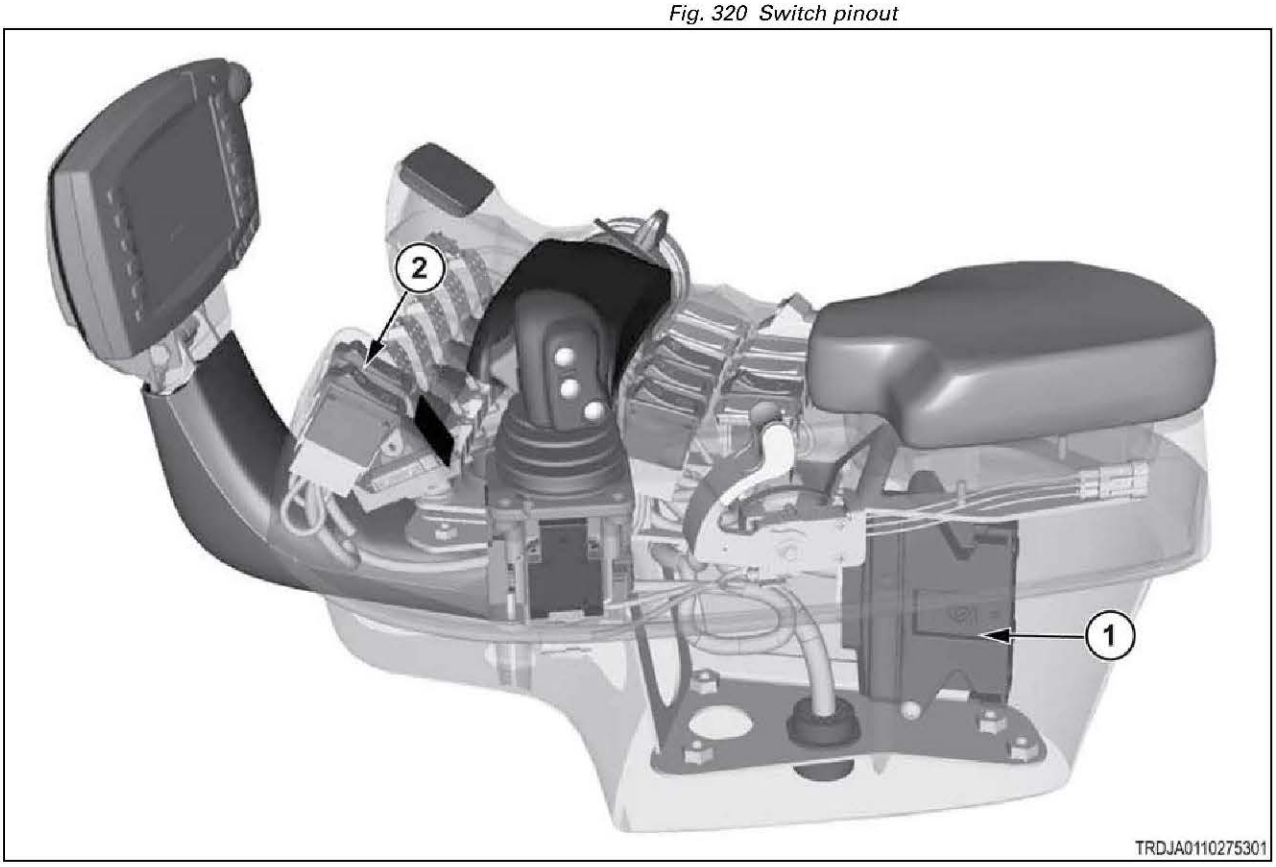

Fig. 321

(1)	Armrest module
(2)	Maximum power switch

10.7.19 Code SA 05 SPN 1875 FMI 00

The hitch lever position sensor signal is above the normal range.

The hitch lever position sensor is a semi-intelligent hall effect sensor that internally contains 3 hall effect position sensors to accurately detect the lever's shaft position, and circuitry to translate the data from these 3 sensors into a single 0.5 to 4.5 volt output signal to the armrest module.

This error is reported when the sensor data otherwise appears to be valid, but the data range exceeds 4.5 volts. The most likely cause is a faulty sensor.

Diagnosis and solution

1. Check the voltages at the sensor.

a) Open the armrest console to gain access to the sensor's harness connector.

b) Turn the key start switch to the on position, but do not start the engine.

c) Check the voltage between contacts 1 and 2 at the sensor connector.

The 12-volt fuse is known to be okay, because it also powers the armrest ECU itself, and this error could not be reported without power.

Result

- The voltage is not at or near 12 volts.

  Repair or replace the harness between the sensor and the armrest ECU.

  See step 2 to validate the repair.
- The voltage is at or near 12 volts.

  Continue.

d) Check the voltage between contacts 1 and 3 at the sensor connector while moving tthe lever through its full range of motion.

Result

The expected range is 0.5 to 4.5 volts.

- The voltage exceeds 4.5 volts.

  Replace the sensor.

  See step 2 to validate the repair.
- The voltage range is 0.5 to 4.5 volts.

  Inspect the sensor and ECU harness connectors for loose or corroded terminals

  See step 2 to check if the error persists.

2. Check if the diagnostic code remains.

a) Inspect and clean the harness connector contacts.

b) Connect all the connectors.

c) Turn the battery disconnect switch to the on position.

d) Turn the key start switch to the on position.

e) Operate the machine at low idle.

f) Check if the diagnostic code remains.

Result

- SPN 1875 FMI 00 is not active.

  Stop.

- SPN 1875 FMI 00 is active.

  Failure of the armrest module is possible but not common. Exit the procedure and do the procedure again. If the diagnostic code remains active, replace the module.

  Stop.

10.7.19.1 Hitch depth/implement lever position sensor electrical schematic

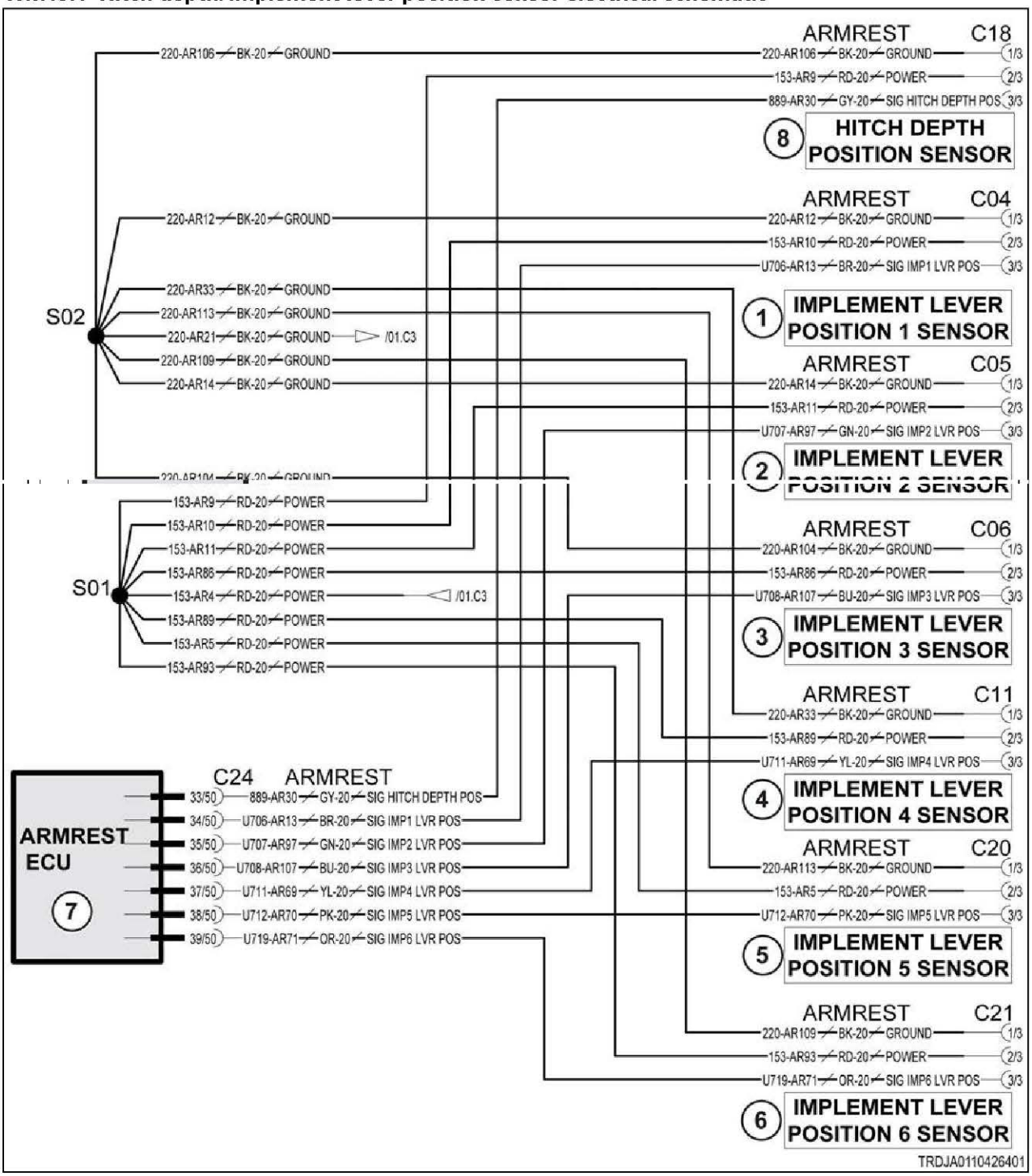

Fig. 322

Schematic legend		
Item	**Schematic term**	**Description**
1	IMPLEMENT LEVER POSITION 1 SENSOR	Implement lever 1 position sensor
2	IMPLEMENT LEVER POSITION 2 SENSOR	Implement lever 2 position sensor
3	IMPLEMENT LEVER POSITION 3 SENSOR	Implement lever 3 position sensor
4	IMPLEMENT LEVER POSITION 4 SENSOR	Implement lever 4 position sensor
5	IMPLEMENT LEVER POSITION 5 SENSOR	Implement lever 5 position sensor
6	IMPLEMENT LEVER POSITION 6 SENSOR	Implement lever 6 position sensor
7	ARMREST ECU	Armrest module
8	HITCH DEPTH POSITION SENSOR	Hitch depth position sensor
--	SIG HITCH DEPTH POS	Signal hitch depth position sensor
--	SIG IMP1 LVR POS	Signal implement lever 1 position sensor

10.7.19.2 Hitch lever position sensor

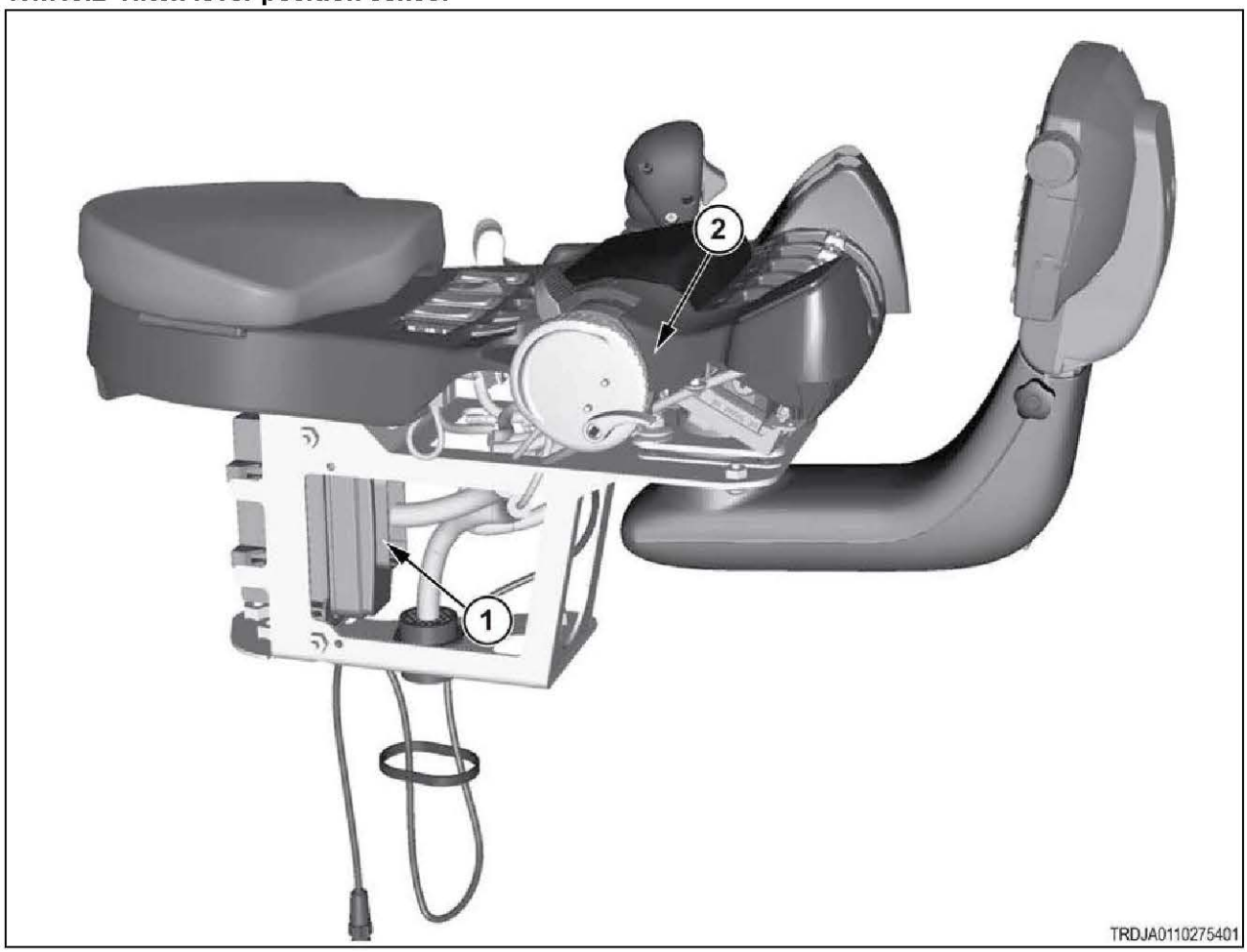

Fig. 323

(1)	Armrest module
(2)	Hitch lever position sensor

10.7.20 Code SA 05 SPN 1875 FMI 01

The hitch lever position sensor signal is below the normal range.

The hitch lever position sensor is a semi-intelligent hall effect sensor that internally contains 3 hall effect position sensors to accurately detect the lever's shaft position, and circuitry to translate the data from these 3 sensors into a single 0.5 to 4.5 volt output signal to the armrest module.

This error is reported when the sensor data otherwise appears to be valid, but the data range goes below 0.5 volts. The most likely cause is a faulty sensor.

Diagnosis and solution

1. Check the voltages at the sensor.

a) Open the armrest console to gain access to the sensor's harness connector.

b) Turn the key start switch to the on position, but do not start the engine.

c) Check the voltage between contacts 1 and 2 at the sensor connector.

The 12-volt fuse is known to be okay, because it also powers the armrest ECU itself, and this error could not be reported without power.

Result

- The voltage is not at or near 12 volts.

  Repair or replace the harness between the sensor and the armrest ECU.

  See step 2 to validate the repair.
- The voltage is at or near 12 volts.

  Continue.

d) Check the voltage between contacts 1 and 3 at the sensor connector while moving tthe lever through its full range of motion.

Result

The expected range is 0.5 to 4.5 volts.

- The voltage drops below 0.5 volts.

  Replace the sensor.

  See step 2 to validate the repair.
- The voltage range is 0.5 to 4.5 volts.

  Inspect the sensor and ECU harness connectors for loose or corroded terminals

  See step 2 to check if the error persists.

2. Check if the diagnostic code remains.

a) Inspect and clean the harness connector contacts.

b) Connect all the connectors.

c) Turn the battery disconnect switch to the on position.

d) Turn the key start switch to the on position.

e) Operate the machine at low idle.

f) Check if the diagnostic code remains.

Result

- SPN 1875 FMI 01 is not active.

  Stop.

- SPN 1875 FMI 01 is active.

  Failure of the armrest module is possible but not common. Exit the procedure and do the procedure again. If the diagnostic code remains active, replace the module.

  Stop.

10.7.20.1 Hitch depth/implement lever position sensor electrical schematic

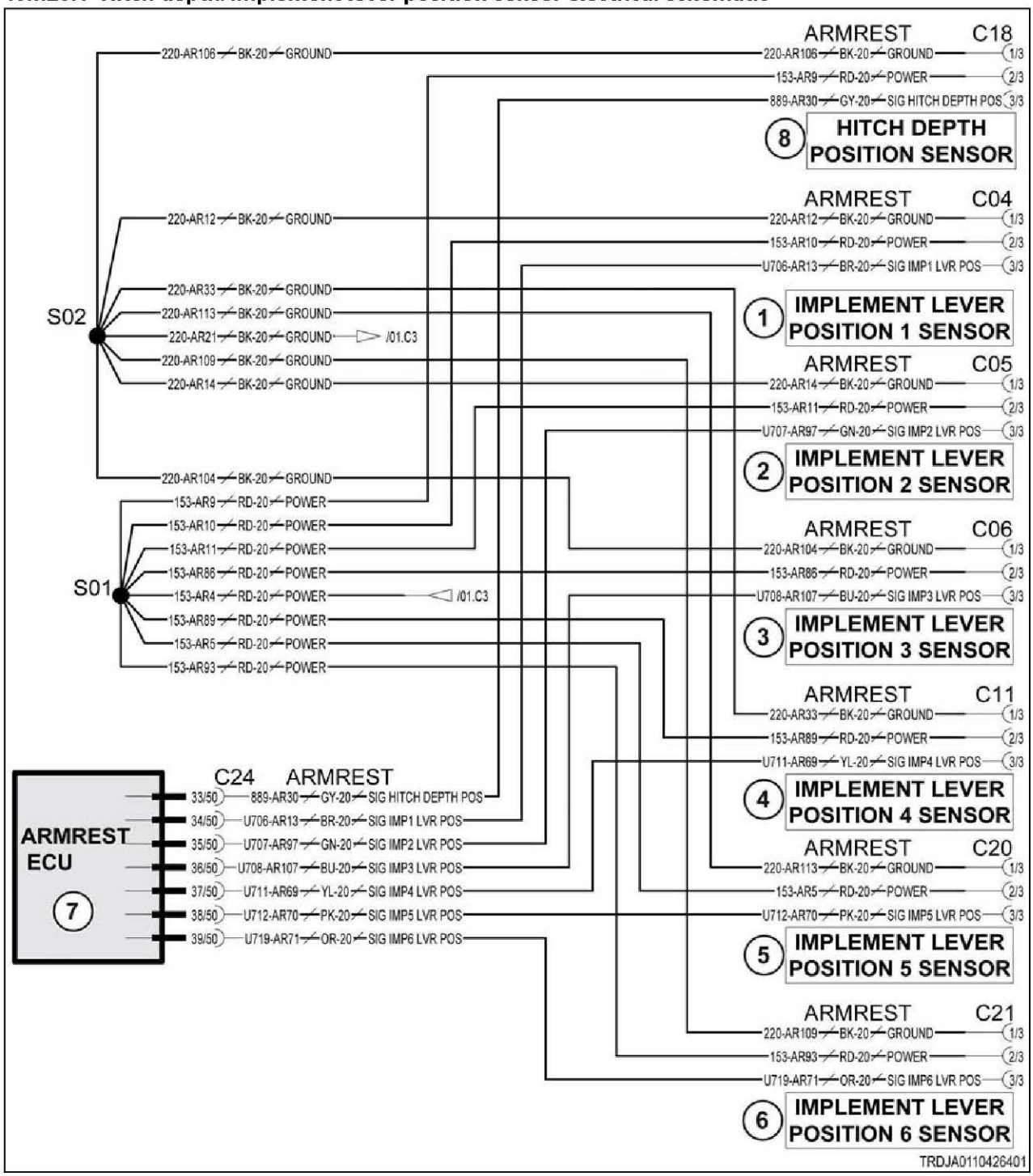

Fig. 324

Schematic legend		
Item	**Schematic term**	**Description**
1	IMPLEMENT LEVER POSITION 1 SENSOR	Implement lever 1 position sensor
2	IMPLEMENT LEVER POSITION 2 SENSOR	Implement lever 2 position sensor
3	IMPLEMENT LEVER POSITION 3 SENSOR	Implement lever 3 position sensor
4	IMPLEMENT LEVER POSITION 4 SENSOR	Implement lever 4 position sensor
5	IMPLEMENT LEVER POSITION 5 SENSOR	Implement lever 5 position sensor
6	IMPLEMENT LEVER POSITION 6 SENSOR	Implement lever 6 position sensor
7	ARMREST ECU	Armrest module
8	HITCH DEPTH POSITION SENSOR	Hitch depth position sensor
--	SIG HITCH DEPTH POS	Signal hitch depth position sensor
--	SIG IMP1 LVR POS	Signal implement lever 1 position sensor

10.7.20.2 Hitch lever position sensor

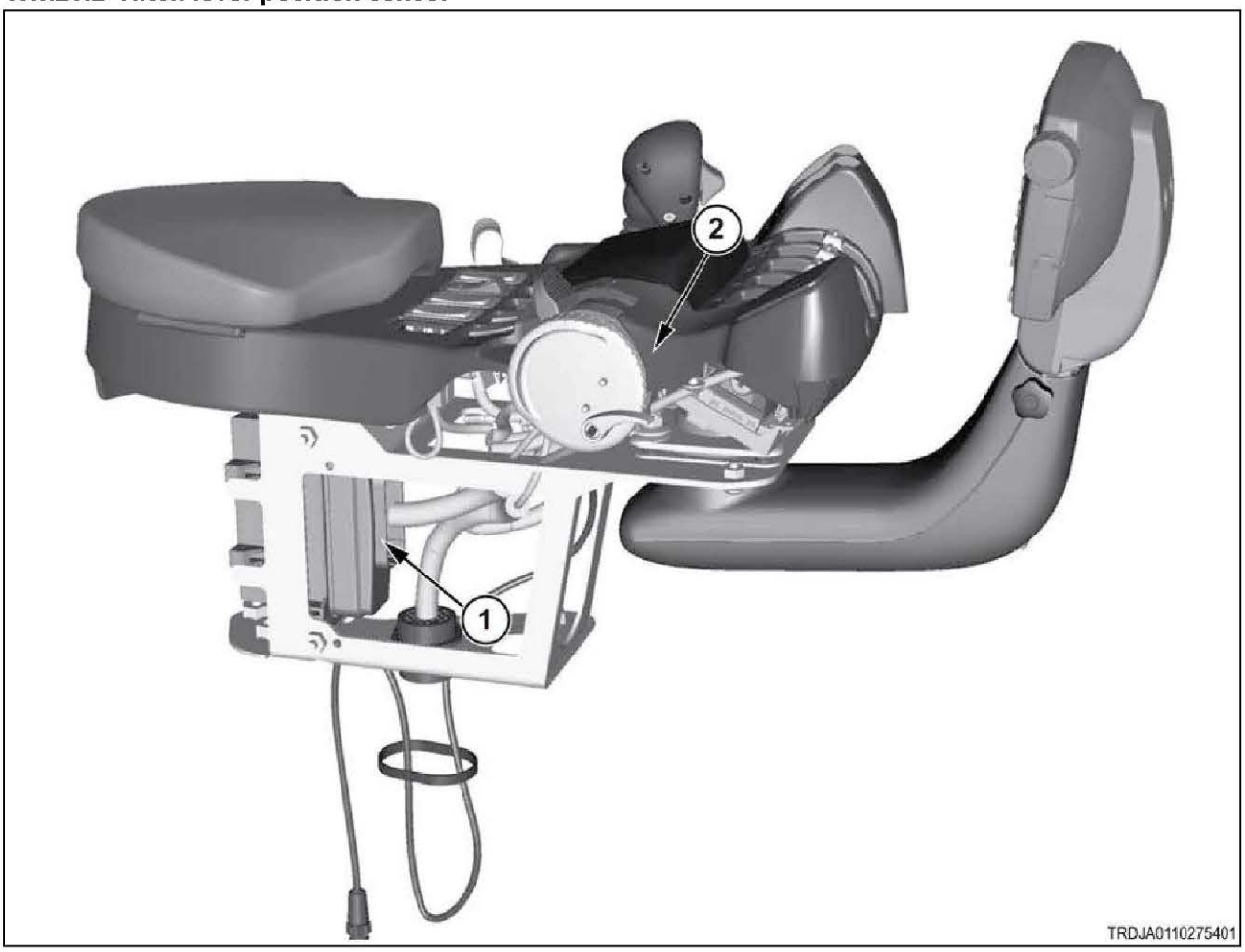

Fig. 325

(1)	Armrest module
(2)	Hitch lever position sensor

10.7.21 Code SA 05 SPN 1875 FMI 03

The hitch lever position sensor signal voltage is out of range - high.

The hitch lever position sensor is a semi-intelligent hall effect sensor that internally contains 3 hall effect position sensors to accurately detect the lever's shaft position, and circuitry to translate the data from these 3 sensors into a single 0.5 to 4.5 volt output signal to the armrest module.

This error is reported when the sensor data is not valid and exceeds 4.5 volts. The most likely cause is a faulty sensor or short circuit to power.

Diagnosis and solution

1. Check the harness for short circuit.

a) Turn the start switch to the off position.
b) Turn the battery disconnect switch to the off position.
c) Disconnect the harness connector from the sensor.
d) Disconnect the harness connector from the armrest module.
e) Check the resistance from contact C24-33 to all other C24 contacts at the armrest connector.

Result

- One or more resistance measurement is at or near 0 ohms.

  Repair or replace the armrest harness.

  See step 3 to validate the repair.
- All resistance measurements were high (not near 0 ohms).

  See step 2 to check the sensor voltages.

2. Check the voltages at the sensor.

a) Reconnect the sensor and ECU.
b) Turn the key start switch to the on position, but do not start the engine.
c) Check the voltage between contacts 1 and 2 at the sensor connector.

The 12-volt fuse is known to be okay, because it also powers the armrest ECU itself, and this error could not be reported without power.

Result

- The voltage is not at or near 12 volts.

  Repair or replace the harness between the sensor and the armrest ECU.

  See step 3 to validate the repair.
- The voltage is at or near 12 volts.

  Continue.

d) Check the voltage between contacts 1 and 3 at the sensor connector while moving tthe lever through its full range of motion.

Result

The expected range is 0.5 to 4.5 volts.

- The voltage exceeds 4.5 volts.

  Replace the sensor.

  See step 2 to validate the repair.
- The voltage range is 0.5 to 4.5 volts.

  The armrest ECU is suspect.

  See step 3 to check if the error persists.

3. Check if the diagnostic code remains.

a) Inspect and clean the harness connector contacts.
b) Connect all the connectors.
c) Turn the battery disconnect switch to the on position.
d) Turn the key start switch to the on position.
e) Operate the machine at low idle.
f) Check if the diagnostic code remains.

Result

- SPN 1875 FMI 03 is not active.

  Stop.
- SPN 1875 FMI 03 is active.

  Failure of the armrest module is possible but not common. Exit the procedure and do the procedure again. If the diagnostic code remains active, replace the module.

  Stop.

10.7.21.1 Hitch depth/implement lever position sensor electrical schematic

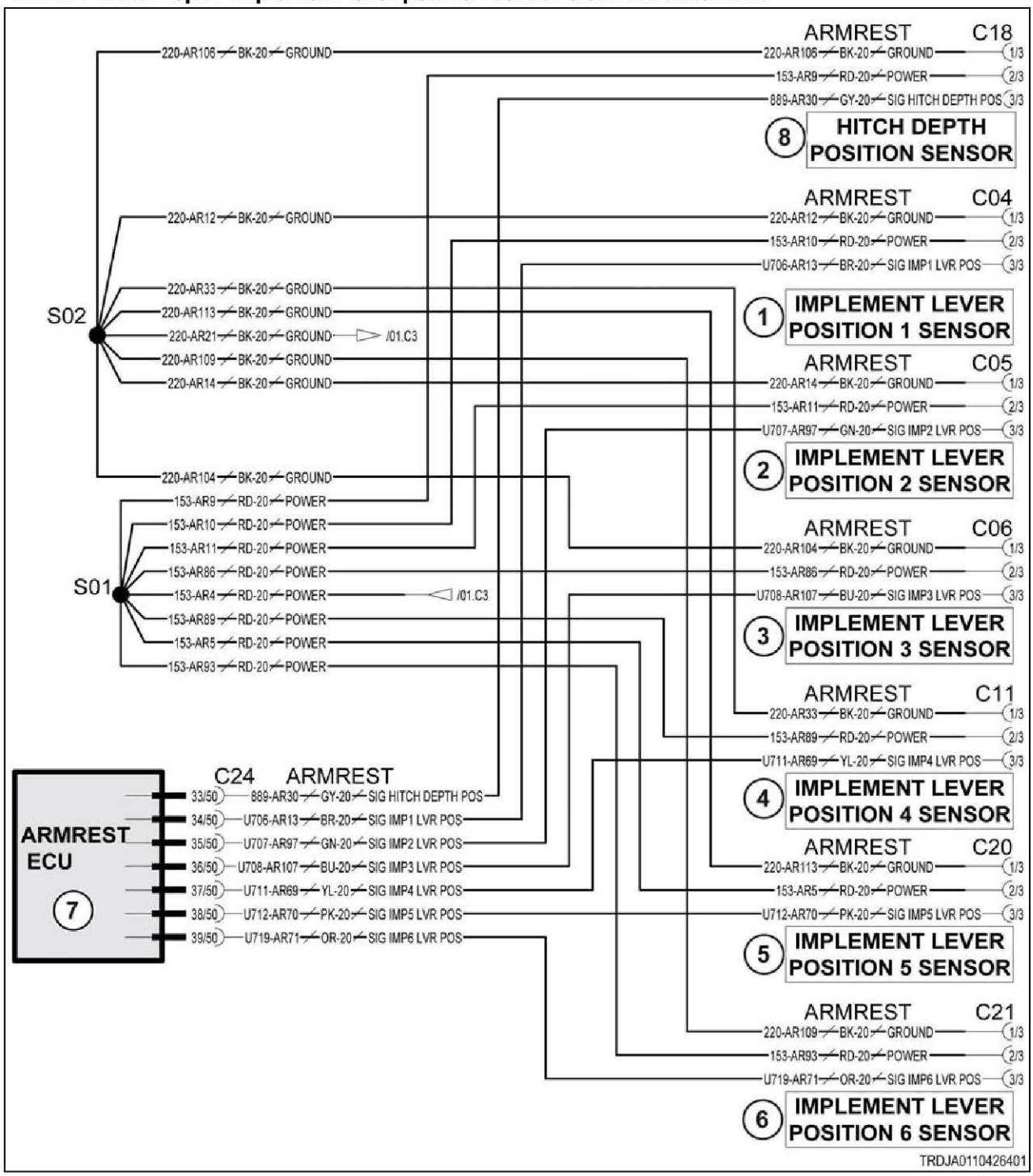

Fig. 326

Schematic legend		
Item	**Schematic term**	**Description**
1	IMPLEMENT LEVER POSITION 1 SENSOR	Implement lever 1 position sensor
2	IMPLEMENT LEVER POSITION 2 SENSOR	Implement lever 2 position sensor
3	IMPLEMENT LEVER POSITION 3 SENSOR	Implement lever 3 position sensor
4	IMPLEMENT LEVER POSITION 4 SENSOR	Implement lever 4 position sensor

Schematic legend		
Item	**Schematic term**	**Description**
5	IMPLEMENT LEVER POSITION 5 SENSOR	Implement lever 5 position sensor
6	IMPLEMENT LEVER POSITION 6 SENSOR	Implement lever 6 position sensor
7	ARMREST ECU	Armrest module
8	HITCH DEPTH POSITION SENSOR	Hitch depth position sensor
--	SIG HITCH DEPTH POS	Signal hitch depth position sensor
--	SIG IMP1 LVR POS	Signal implement lever 1 position sensor

10.7.21.2 Hitch lever position sensor

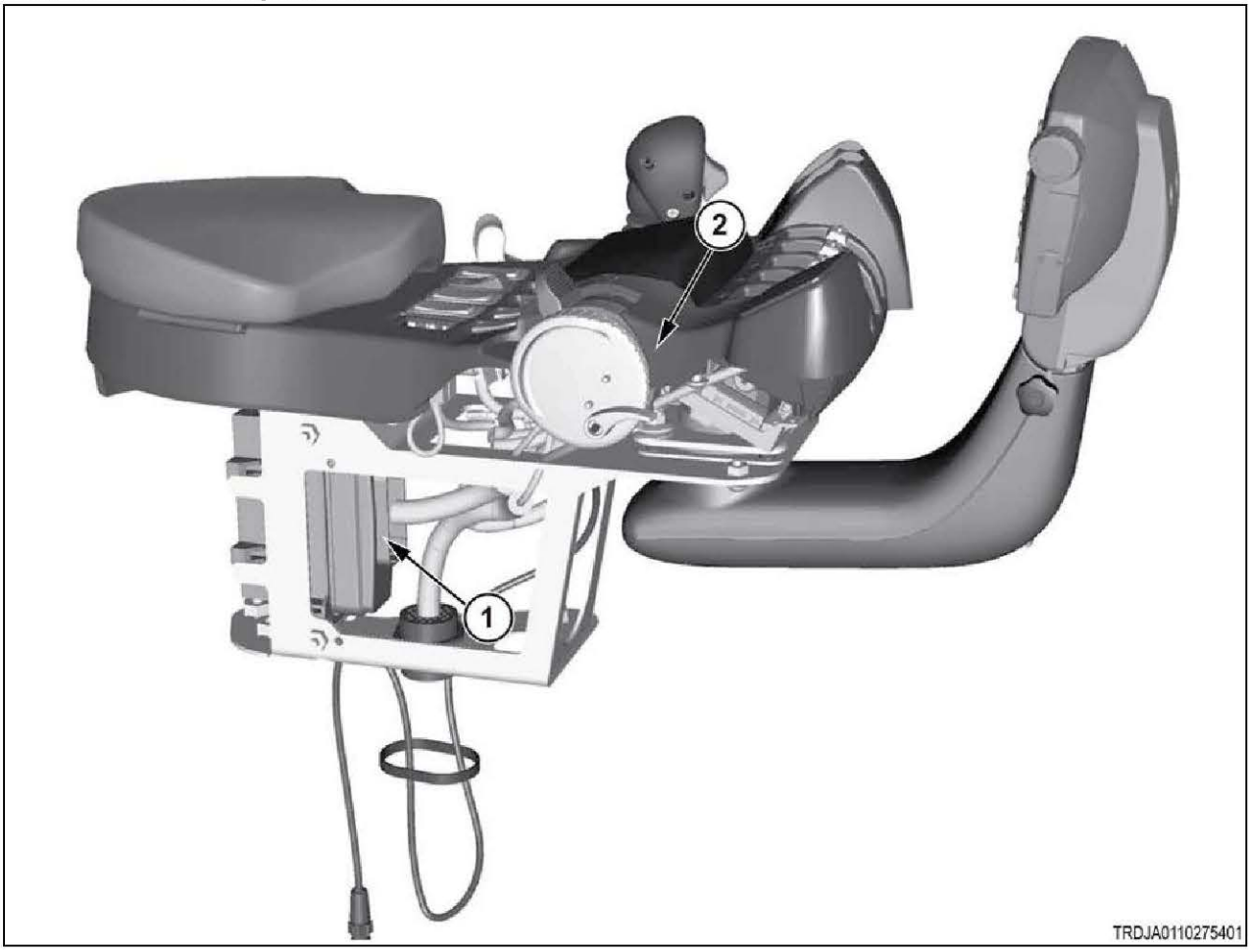

Fig. 327

(1)	Armrest module
(2)	Hitch lever position sensor

10.7.22 Code SA 05 SPN 1875 FMI 04

The hitch lever position sensor signal is out of range - low.

The hitch lever position sensor is a semi-intelligent hall effect sensor that internally contains 3 hall effect position sensors to accurately detect the lever's shaft position, and circuitry to translate the data from these 3 sensors into a single 0.5 to 4.5 volt output signal to the armrest module.

This error is reported when the sensor data is not valid and drops below 0.5 volts. The most likely cause is a faulty sensor or short circuit to ground.

Diagnosis and solution

1. Check the harness for short circuit.
   a) Turn the start switch to the off position.
   b) Turn the battery disconnect switch to the off position.
   c) Disconnect the harness connector from the sensor.
   d) Disconnect the harness connector from the armrest module.
   e) Check the resistance from contact C24-33 to all other C24 contacts at the armrest connector.

   Result

   - One or more resistance measurement is at or near 0 ohms.

     Repair or replace the armrest harness.

     See step 3 to validate the repair.
   - All resistance measurements were high (not near 0 ohms).

     See step 2 to check the sensor voltages.

2. Check the voltages at the sensor.
   a) Reconnect the sensor and ECU.
   b) Turn the key start switch to the on position, but do not start the engine.
   c) Check the voltage between contacts 1 and 2 at the sensor connector.

      The 12-volt fuse is known to be okay, because it also powers the armrest ECU itself, and this error could not be reported without power.

      Result

      - The voltage is not at or near 12 volts.

        Repair or replace the harness between the sensor and the armrest ECU.

        See step 3 to validate the repair.
      - The voltage is at or near 12 volts.

        Continue.
   d) Check the voltage between contacts 1 and 3 at the sensor connector while moving tthe lever through its full range of motion.

      Result

      The expected range is 0.5 to 4.5 volts.

      - The voltage drops below 0.5 volts.

        Replace the sensor.

        See step 2 to validate the repair.
      - The voltage range is 0.5 to 4.5 volts.

        The armrest ECU is suspect.

        See step 3 to check if the error persists.

3. Check if the diagnostic code remains.
   a) Inspect and clean the harness connector contacts.
   b) Connect all the connectors.
   c) Turn the battery disconnect switch to the on position.
   d) Turn the key start switch to the on position.
   e) Operate the machine at low idle.
   f) Check if the diagnostic code remains.

Result

- SPN 1875 FMI 04 is not active.

  Stop.
- SPN 1875 FMI 04 is active.

  Failure of the armrest module is possible but not common. Exit the procedure and do the procedure again. If the diagnostic code remains active, replace the module.

  Stop.

10.7.22.1 Hitch depth/implement lever position sensor electrical schematic

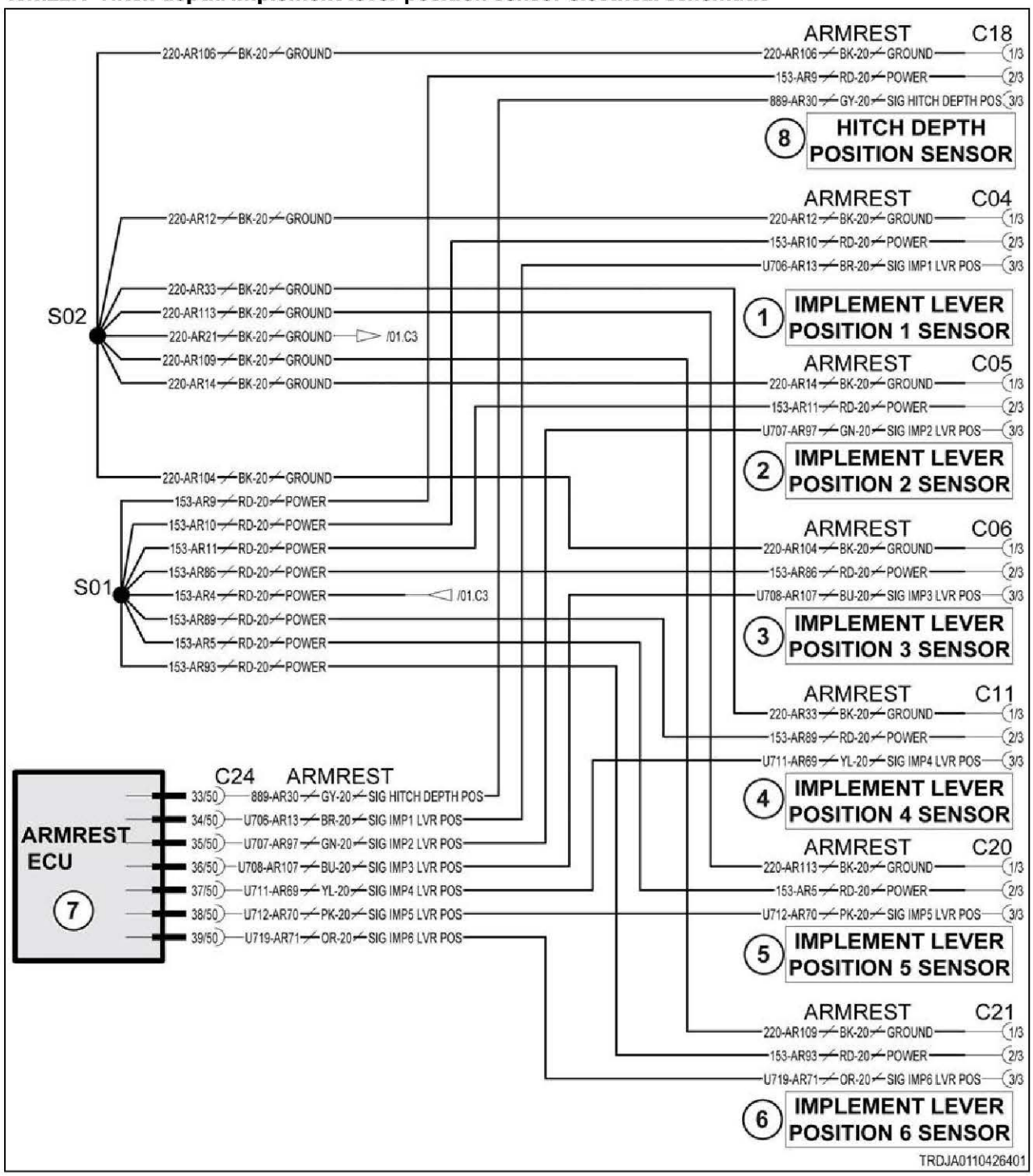

Fig. 328

Schematic legend		
Item	**Schematic term**	**Description**
1	IMPLEMENT LEVER POSITION 1 SENSOR	Implement lever 1 position sensor
2	IMPLEMENT LEVER POSITION 2 SENSOR	Implement lever 2 position sensor
3	IMPLEMENT LEVER POSITION 3 SENSOR	Implement lever 3 position sensor
4	IMPLEMENT LEVER POSITION 4 SENSOR	Implement lever 4 position sensor
5	IMPLEMENT LEVER POSITION 5 SENSOR	Implement lever 5 position sensor
6	IMPLEMENT LEVER POSITION 6 SENSOR	Implement lever 6 position sensor
7	ARMREST ECU	Armrest module
8	HITCH DEPTH POSITION SENSOR	Hitch depth position sensor
--	SIG HITCH DEPTH POS	Signal hitch depth position sensor
--	SIG IMP1 LVR POS	Signal implement lever 1 position sensor

10.7.22.2 Hitch lever position sensor

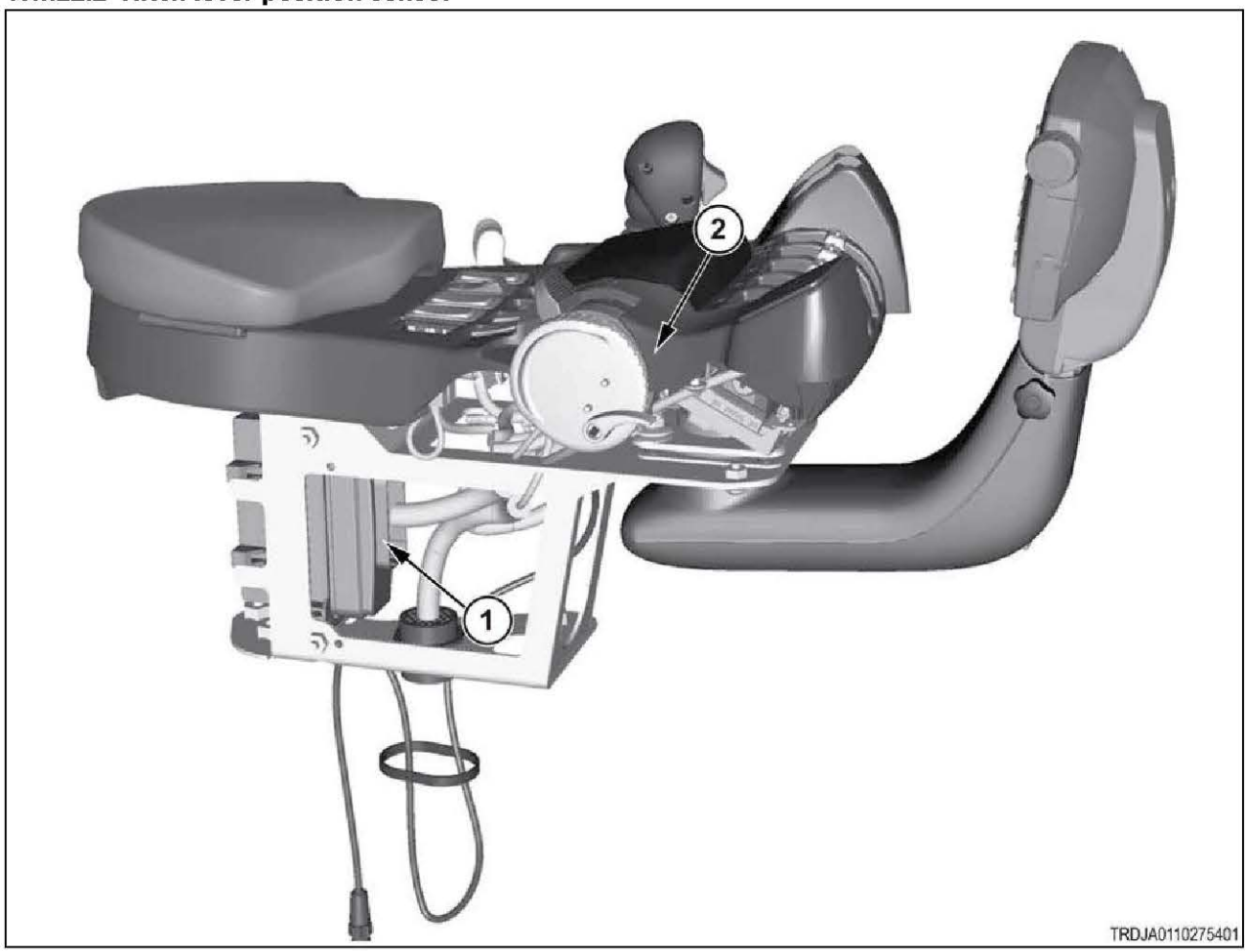

Fig. 329

(1)	Armrest module
(2)	Hitch lever position sensor

10.7.23 Code SA 05 SPN 1894 FMI 02

The power take-off switch signal is erratic, intermittent, or not correct.

The switch is a double-pole, double-throw (SPDT) type switch, except the "common" terminal is the data output instead of a power source. The 4 other contacts are connected to 3.33-volt power and 1.66-volt power. Operating the switch selects one of these voltages for the signal output. These 2 power circuits are shared by several other function switches on the armrest. This knowledge can aid in diagnosing the fault.

Diagnosis and solution

1. Check the function of upstream and downstream switches that share power circuits.

a) Turn the key start switch to the on position.
b) Operate the creeper switch in both directions.
c) Operate the roading lock switch in both directions.
d) Check for additional error codes.

Result

- SA 05 SPN 96 FMI 02 (creeper) error is reported.

  Focus further examination on the power circuits between the creeper switch and the armrest controller.

  See step 2 to check for loose connections.
- SA 05 SPN 520194 FMI 02 (roading lock) is reported, but not a creeper error.

  Focus further examination on the power circuits between the rear PTO switch and the creeper switch.

  See step 2 to check for loose connections.
- No additional error codes are reported.

  The power circuits are not suspect.

  Focus further examination on the switch signal output.

  See step 2 to check for loose connections.

2. Inspect all harness and switch connections.

a) Turn the key start switch to the off position.
b) Turn the battery disconnect switch to the off position.
c) Open the top of the armrest console.
d) Inspect and clean all connectors and connector contacts:

- Look for bent or worn pins.
- Look for deformed or oversized sockets.
- Look for corrosion on the pins and sockets. Corrosion is a sign of a loose connection.
- Look for signs of overheating. Overheating is a sign of a poor connection, and can further loosen the pin or socket mount. The whole connector body should be replaced.

e) Make sure to inspect the circuits identified in step 1 as they pass through the following connector locations:

- Switch signal at the armrest ECU C24-28 and C24-29 .
- All contacts at the PTO switch.

- The 1.66V and 3.33V power signals as they pass through the following switches:

  Rear PTO switch

  Creeper switch

  Auto Guide switch

  Engine A/B switch

  Shift Handle

  Armrest ECU C24-8 (3.33V) and C24-10 (1.66V)

f) Repair or replace any connector or harness found faulty.

Result

- No faulty contacts were found.

  See step 3 to check the switch function.
- Faulty contacts were found and repaired.

  See step 4 to validate the repair.

3. Check the switch function.

a) Disconnect the PTO switch.

b) Check resistance between contacts 2 & 1 and 2 & 3, as you operate the switch from engage and disengage.

c) Check resistance between contacts 5 & 6 and 5 & 4, as you operate the switch from engage and disengage.

- In the engage-position, contacts 2 & 3 and 5 & 6 should have continuity.
- In the disengage-position, contacts 2 & 1 and 5 & 4 should have continuity.

Result

- Continuity checks are correct.

  See step 4 to check if the error persists.
- Continuity checks are incorrect.

  Replace the switch.

  See step 4 to validate the repair.

4. Check if the fault code remains.

a) Inspect and clean the harness connector contacts.

b) Connect all the connectors.

c) Turn the battery disconnect switch to the on position.

d) Turn the key start switch to the on position.

e) Operate the machine at low idle.

f) Check if the fault code remains.

Result

- SPN 1894 FMI 02 is not active.

  Stop.
- SPN 1894 FMI 02 is active.

  Failure of the armrest module is possible but not common. Exit the procedure and do the procedure again. If the fault code remains active, replace the armrest module.

  Stop.

10.7.23.1 Power take-off switch electrical schematic

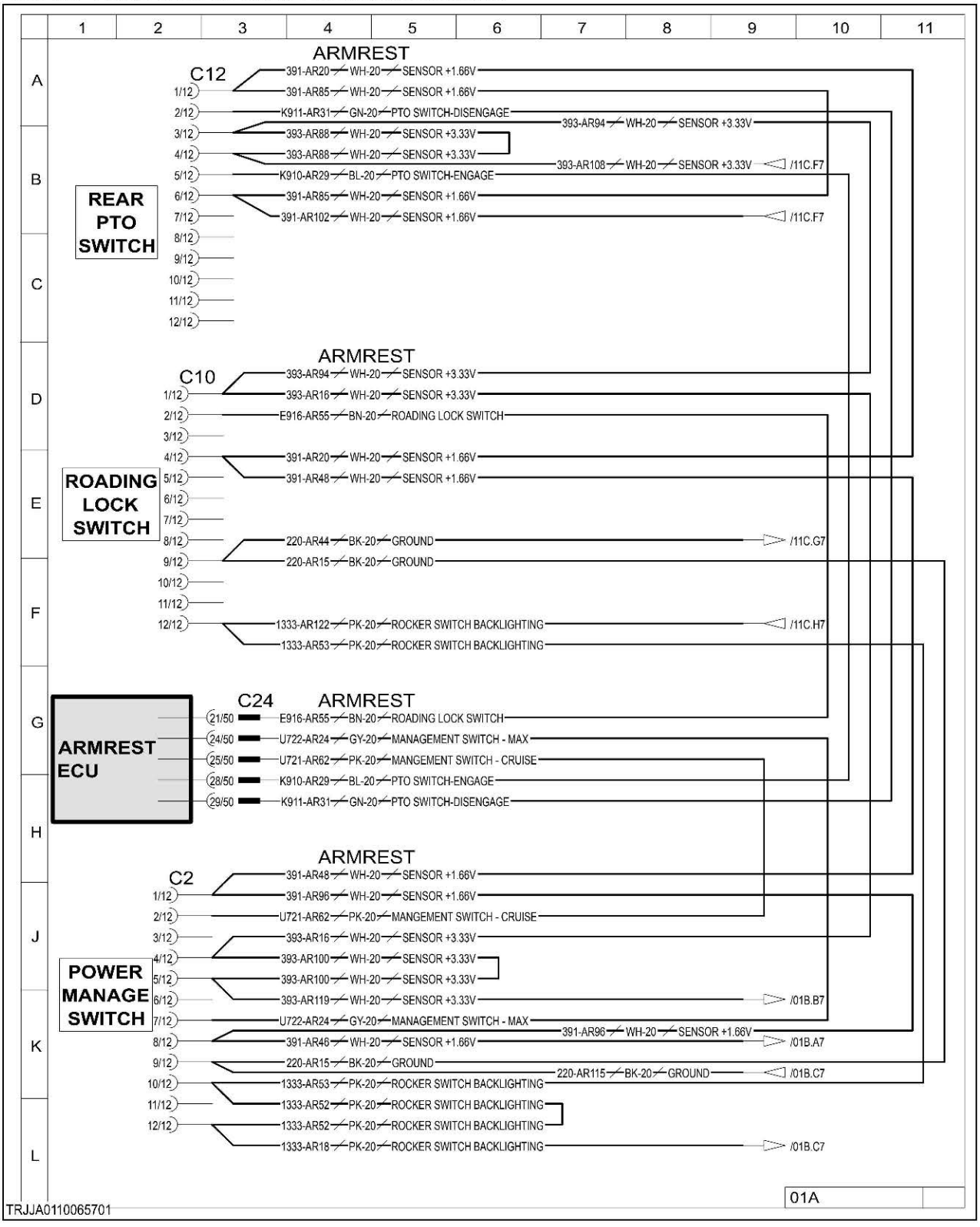

Fig. 330

10.7.23.2 Power take-off switch



Fig. 331 Switch pinout

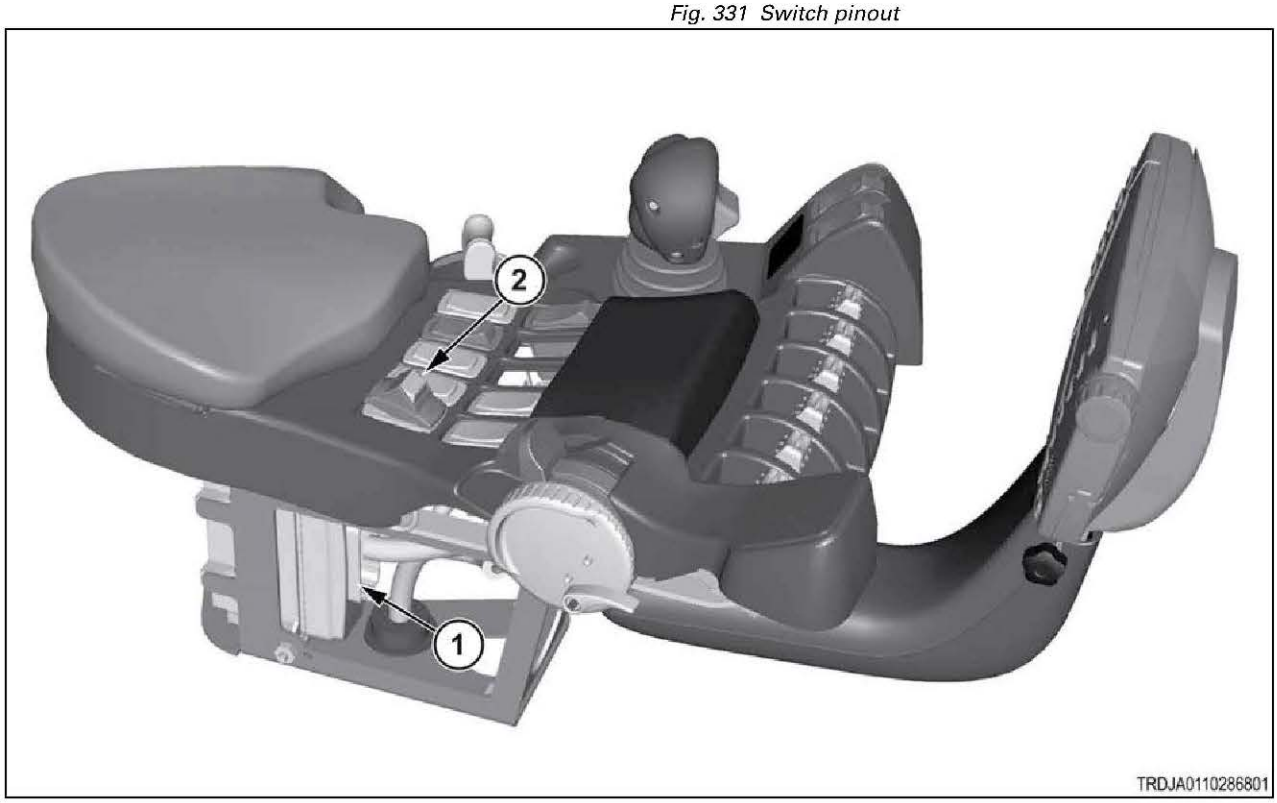

Fig. 332

(1)	Armrest module
(2)	Power take-off switch

10.7.24 Code SA 05 SPN 1894 FMI 03

The power take-off engage switch signal voltage is above normal.

The signal voltage is higher than the 3.33-volt supply. The most likely cause is a short circuit to a higher voltage circuit.

The switch is a double-pole, double-throw (DPDT) type switch, except the "common" terminal is the data output instead of a power source. The 4 other contacts are connected to 3.33-volt power and 1.66-volt power. Operating the switch selects one of these voltages for the signal output. One set of contacts is for PTO engage and the other set for PTO disengage. This error will likely be accompanied by a power supply error too. This information can be used to isolate the cause.

Diagnosis and solution

1. Determine when this error is reported.

a) Turn the key start switch to the on position.

b) Check for this error code (SA 05 SPN 1894 FMI 03) as you operate the switch between the off position and on position.

Note that power supply errors will likely also be reported, as noted below.

Result

- The error is reported only when the switch is in the off position.

  Error code SA 05 SPN 3511 FMI 03 (3.33V power) is likely also reported.

  Diagnose the power supply error code first.

  Stop.
- The error is reported only when the switch is in the on position.

  Error code SA 05 SPN 3510 FMI 03 (1.66V power) is likely also reported.

  Diagnose the power supply error code first.

  Stop.
- The error is reported regardless of switch position.

  The signal wire is shorted to some voltage source.

  Repair or replace the harness.

  See step 2 to validate the repair.

2. Check if the diagnostic code remains.

a) Inspect and clean the harness connector contacts.

b) Connect all the connectors.

c) Turn the battery disconnect switch to the on position.

d) Turn the key start switch to the on position.

e) Operate the machine at low idle.

f) Check if the diagnostic code remains.

Result

- SPN 1894 FMI 03 is not active.

  Stop.
- SPN 1894 FMI 03 is active.

  Failure of the armrest module is possible but not common. Exit the procedure and do the procedure again. If the diagnostic code remains active, replace the module.

  Stop.

10.7.24.1 Power take-off switch electrical schematic

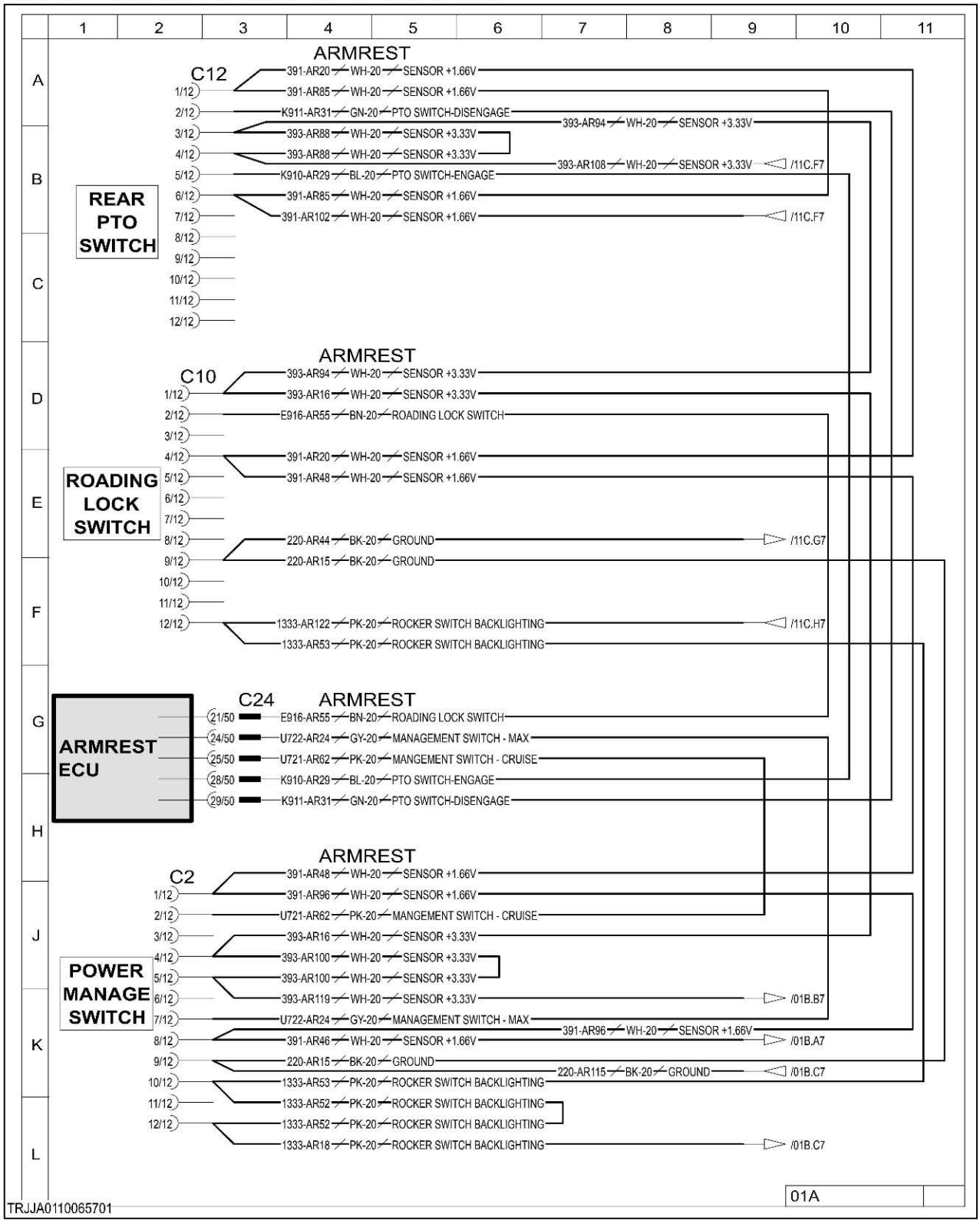

Fig. 333

10.7.24.2 Power take-off switch



Fig. 334 Switch pinout

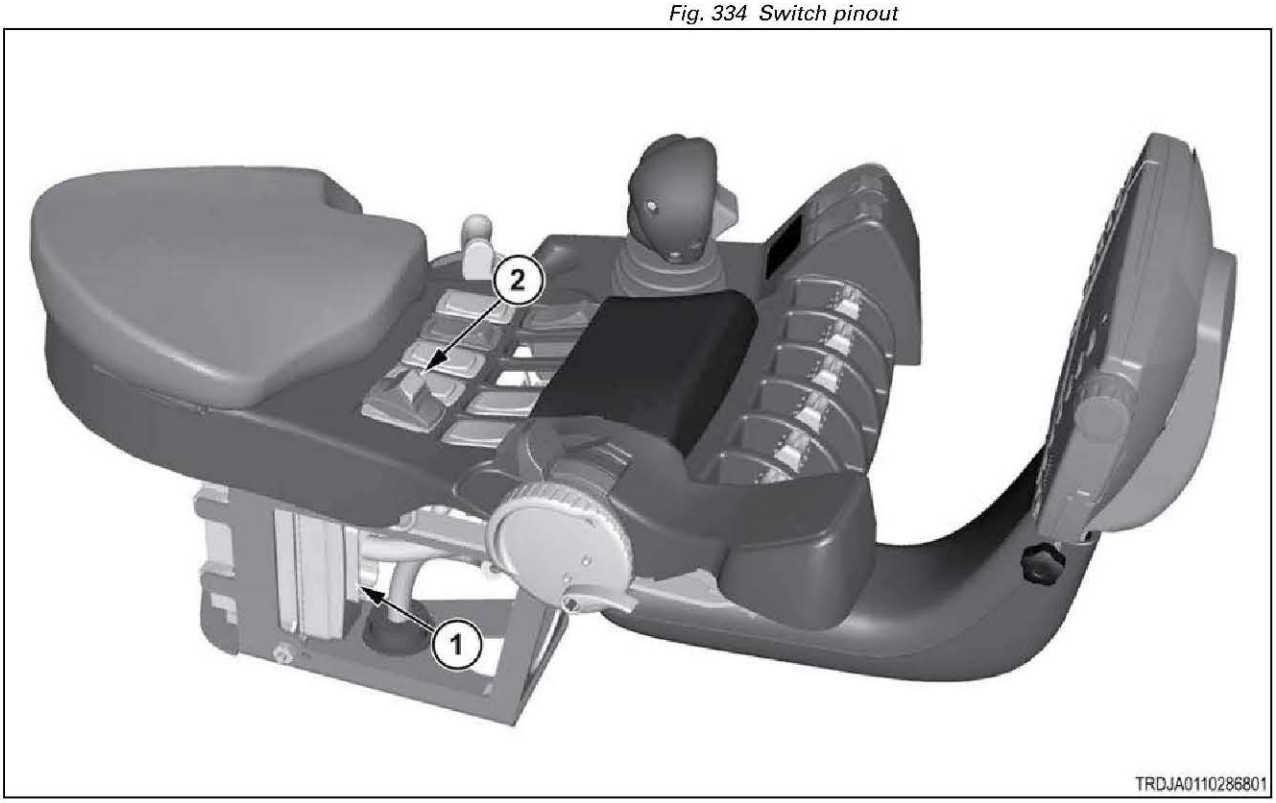

Fig. 335

(1)	Armrest module
(2)	Power take-off switch

10.7.25 Code SA 05 SPN 1894 FMI 04

The power take-off engage switch signal voltage is below normal.

The signal voltage is lower than the 1.66-volt supply. The most likely cause is a short circuit to ground.

The switch is a double-pole, double-throw (DPDT) type switch, except the "common" terminal is the data output instead of a power source. The 4 other contacts are connected to 3.33-volt power and 1.66-volt power. Operating the switch selects one of these voltages for the signal output. One set of contacts is for PTO engage and the other set for PTO disengage. This error will likely be accompanied by a power supply error too. This information can be used to isolate the cause.

Diagnosis and solution

1. Determine when this error is reported.

a) Turn the key start switch to the on position.

b) Check for this error code (SA 05 SPN 1894 FMI 04) as you operate the switch between the center position and PTO engage position.

Note that power supply errors will likely also be reported, as noted below.

Result

- The error is reported only when the switch is in the center position.

  Error code SA 05 SPN 3511 FMI 04 (3.33V power) is likely also reported.

  Diagnose the power supply error code first.

  Stop.
- The error is reported only when the switch is in the on position.

  Error code SA 05 SPN 3510 FMI 04 (1.66V power) is likely also reported.

  Diagnose the power supply error code first.

  Stop.
- The error is reported regardless of switch position.

  The signal wire is shorted to ground.

  Repair or replace the harness.

  See step 2 to validate the repair.

2. Check if the diagnostic code remains.

a) Inspect and clean the harness connector contacts.

b) Connect all the connectors.

c) Turn the battery disconnect switch to the on position.

d) Turn the key start switch to the on position.

e) Operate the machine at low idle.

f) Check if the diagnostic code remains.

Result

- SPN 1894 FMI 04 is not active.

  Stop.
- SPN 1894 FMI 04 is active.

  Failure of the armrest module is possible but not common. Exit the procedure and do the procedure again. If the diagnostic code remains active, replace the module.

  Stop.

10.7.25.1 Power take-off switch electrical schematic

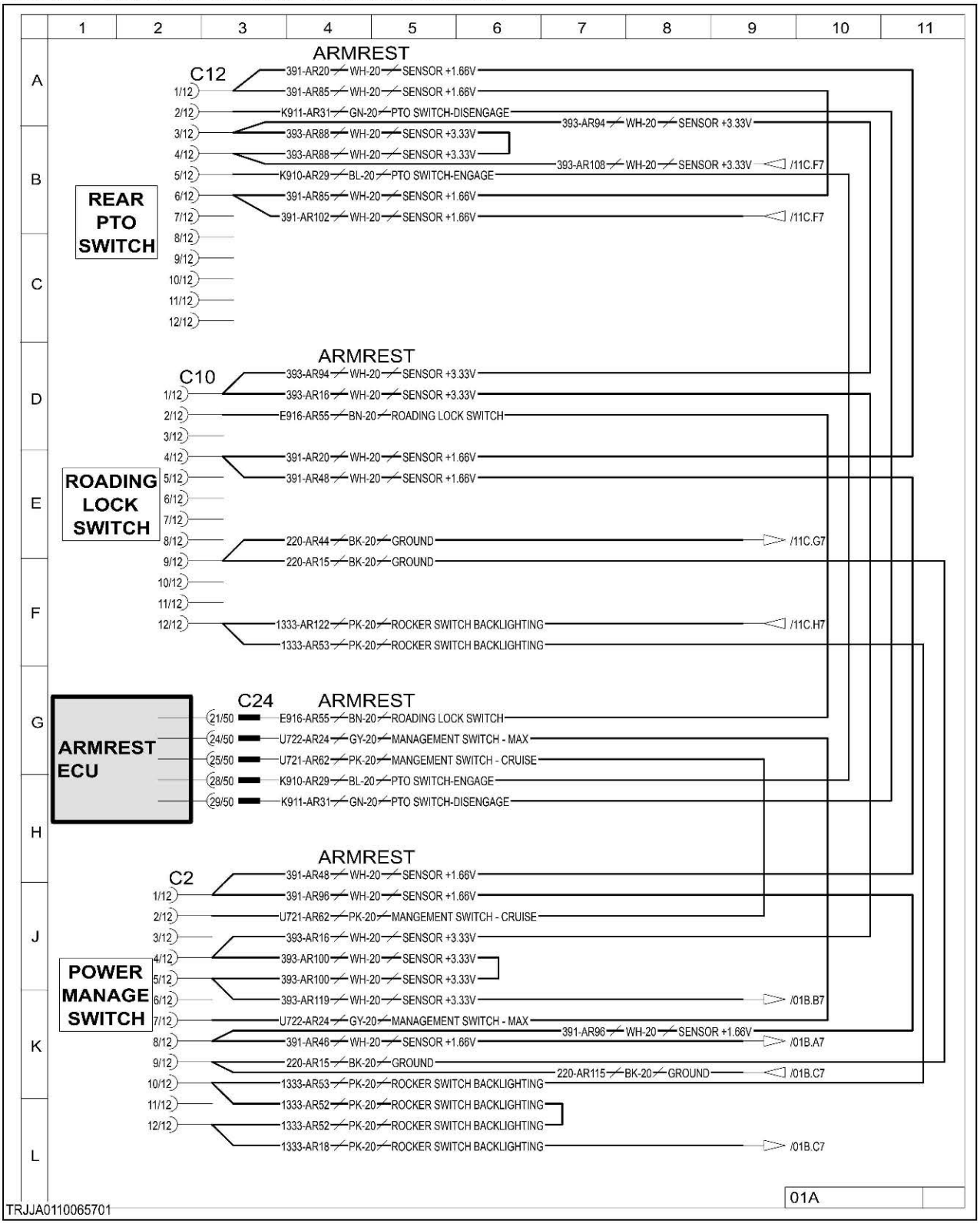

Fig. 336

10.7.25.2 Power take-off switch



Fig. 337 Switch pinout

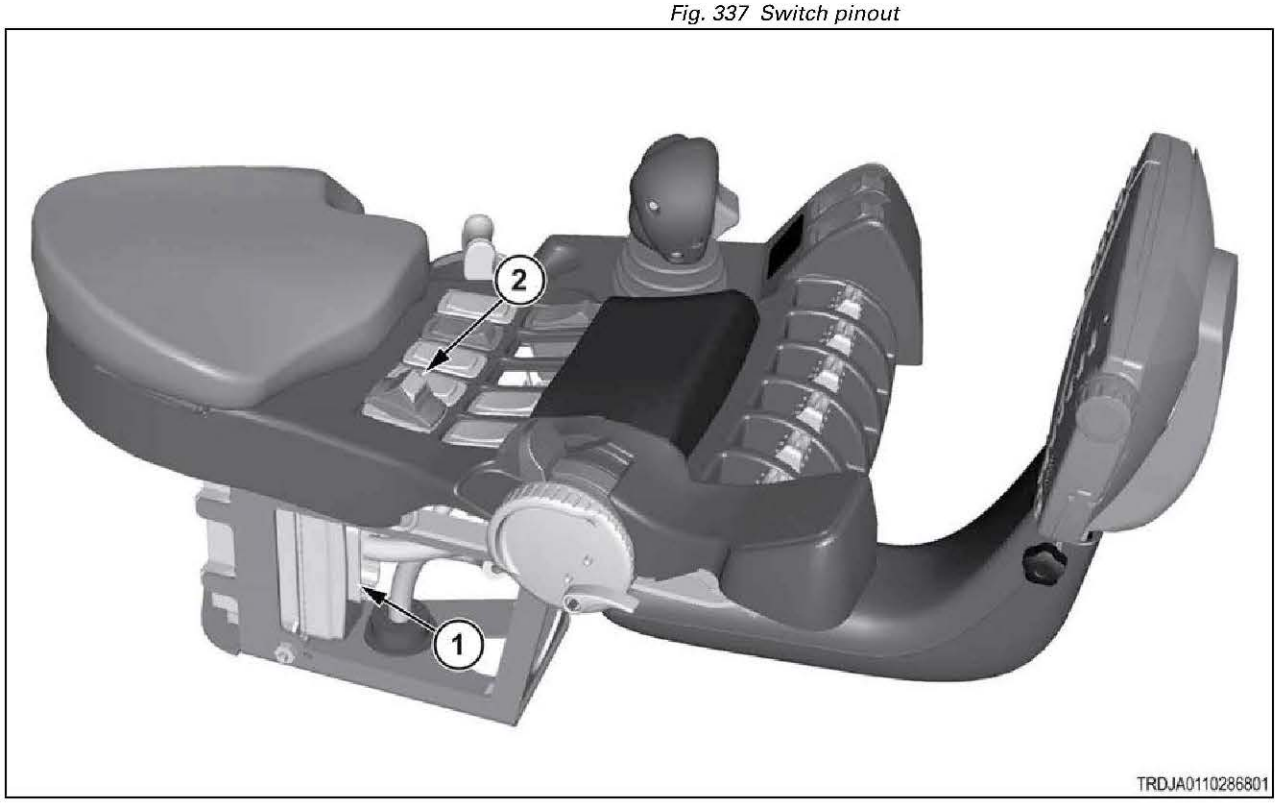

Fig. 338

(1)	Armrest module
(2)	Power take-off switch

10.7.26 Code SA 05 SPN 1894 FMI 05

Open circuit in the power takeoff, engage switch circuit.

The switch is a double-pole, double-throw (DPDT) type switch, except the "common" terminal is the data output instead of a power source. The 4 other contacts are connected to 3.33-volt power and 1.66-volt

power. Operating the switch selects one of these voltages for the signal output. One set of contacts is for PTO engage and the other set for PTO disengage. These 2 power circuits are shared by several other function switches on the armrest. This knowledge can aid in diagnosing the fault.

Diagnosis and solution

1. Determine when this error is reported.

a) Turn the key start switch to the on position.

b) Check whether the error code is reported as you operate the switch between on and off states.

Result

- The error is reported only when the switch is in the off position.

  The open circuit is in the 3.33V power circuit.

  See step 2 to isolate the location.
- The error is reported only when the switch is in the on position.

  The open circuit is in the 1.66V power circuit.

  See step 2 to isolate the location.
- The error is reported regardless of switch position.

  The open circuit is in the signal circuit.

  Repair or replace the armrest harness.

  See step 3 to validate the repair.

2. Isolate the power circuit open circuit.

a) Operate all upstream (and at least one downstream) armrest switches, according to the list below, from their off to on positions.

Electrical sequence of switches, starting from the armrest module.

1. Shift Handle (3 pushbuttons)
2. Engine A/B switch
3. Autoguide switch
4. Creeper switch
5. Rear PTO
6. Roading Lock switch
7. Power management (cruise/full) switch
8. Hitch Raise/Work switch

b) Observe which other switches (if any) exhibit similar open circuit error codes.

Result

- At least one upstream switch reported a similar error.

  The open circuit lies at, or just upstream from, that switch.

  Repair or replace the armrest harness.

  See step 3 to validate the repair.
- Only downstream switches reported similar errors.

  The harness is open circuited at this switch location.

  Repair or replace the harness.

  See step 3 to validate the repair.

- No other switches reported similar errors.

  The switch is at fault.

  Replace the switch.

  See step 3 to validate the repair.

3. Check if the fault code remains.

a) Inspect and clean the harness connector contacts.
b) Connect all the connectors.
c) Turn the battery disconnect switch to the on position.
d) Turn the key start switch to the on position.
e) Operate the machine at low idle.
f) Check if the fault code remains.

Result

- SPN 1894 FMI 05 is not active.

  Stop.
- SPN 1894 FMI 05 is active.

  Failure of the armrest module is possible but not common. Exit the procedure and do the procedure again. If the fault code remains active, replace the armrest module.

  Stop.

10.7.26.1 Power take-off switch electrical schematic

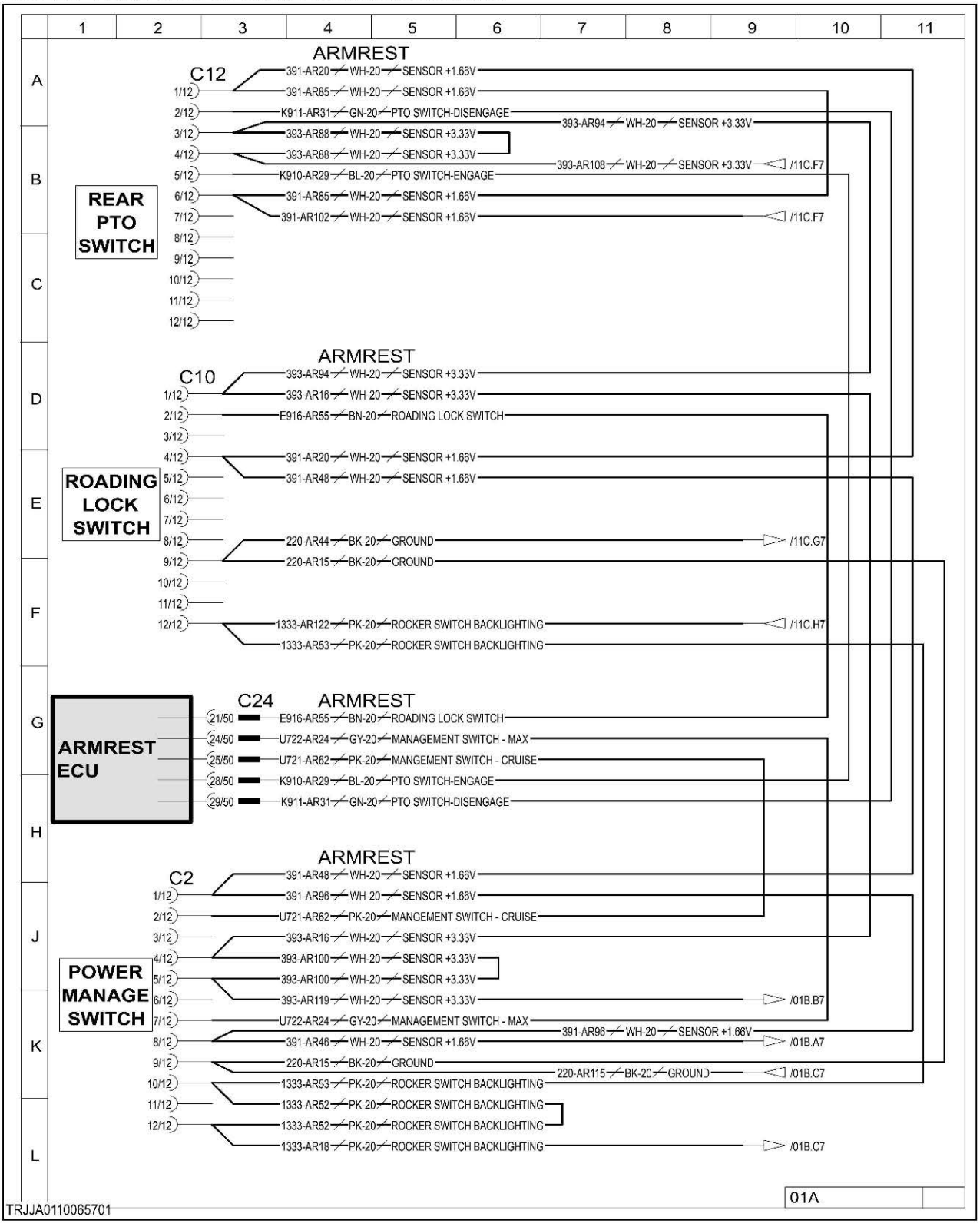

Fig. 339

10.7.26.2 Power take-off switch



Fig. 340 Switch pinout

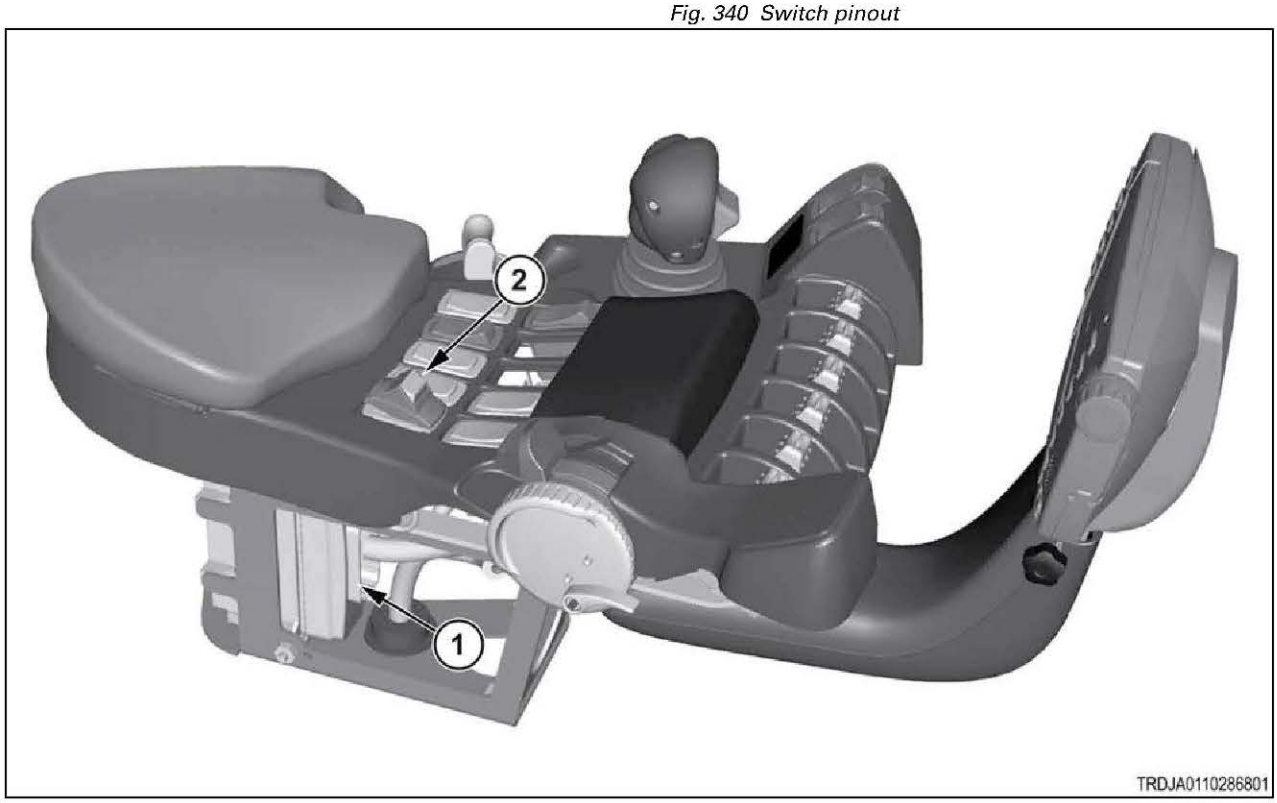

Fig. 341

(1)	Armrest module
(2)	Power take-off switch

10.7.27 Code SA 05 SPN 1919 FMI 00

The auxiliary valve lever 1 position sensor signal is above normal.

The valve lever position sensor is a semi-intelligent hall effect sensor that internally contains a hall effect position sensor to accurately detect the lever's angular position, and circuitry to translate the hall effect sinusoidal data into a linear 0.5 to 4.5 volt output signal to the armrest module.

This error is reported when the sensor data otherwise appears to be valid, but the data range exceeds 4.5 volts. The most likely cause is a faulty sensor.

Diagnosis and solution

1. Check the voltages at the sensor.

a) Open the armrest console to gain access to the sensor's harness connector.

b) Turn the key start switch to the on position, but do not start the engine.

c) Check the voltage between contacts 1 and 2 at the sensor connector.

The 12-volt fuse is known to be okay, because it also powers the armrest ECU itself, and this error could not be reported without power.

Result

- The voltage is not at or near 12 volts.

  Repair or replace the harness between the sensor and the armrest ECU.

  See step 2 to validate the repair.
- The voltage is at or near 12 volts.

  Continue.

d) Check the voltage between contacts 1 and 3 at the sensor connector while moving tthe lever through its full range of motion.

Result

The expected range is 0.5 to 4.5 volts.

- The voltage exceeds 4.5 volts.

  Replace the sensor.

  See step 2 to validate the repair.
- The voltage range is 0.5 to 4.5 volts.

  Inspect the sensor and ECU harness connectors for loose or corroded terminals

  See step 2 to check if the error persists.

2. Check if the diagnostic code remains.

a) Inspect and clean the harness connector contacts.

b) Connect all the connectors.

c) Turn the battery disconnect switch to the on position.

d) Turn the key start switch to the on position.

e) Operate the machine at low idle.

f) Check if the diagnostic code remains.

Result

- SPN 1919 FMI 00 is not active.

  Stop.

- SPN 1919 FMI 00 is active.

  Failure of the armrest module is possible but not common. Exit the procedure and do the procedure again. If the diagnostic code remains active, replace the module.

  Stop.

10.7.27.1 Auxiliary valve control sensors electrical schematic

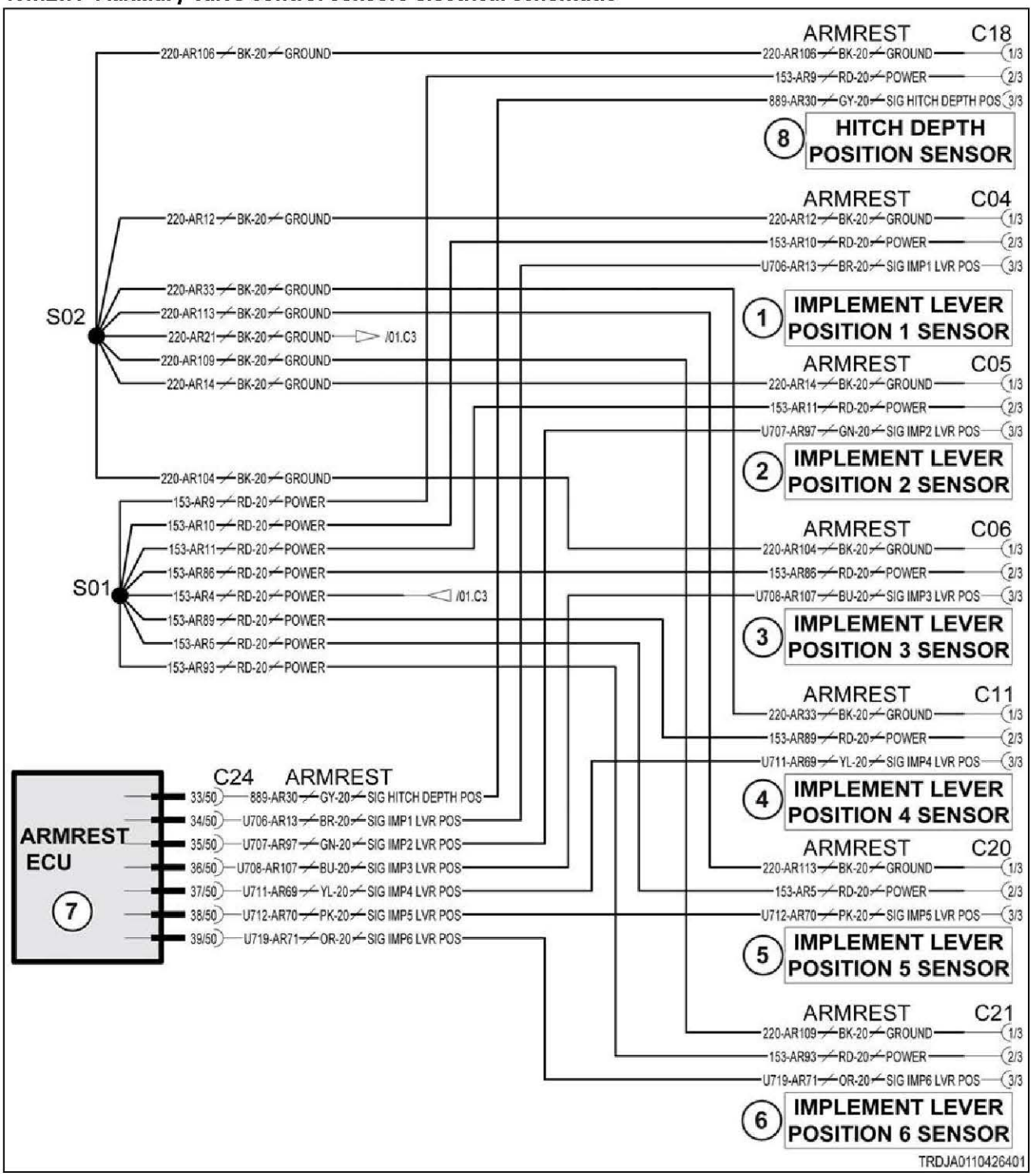

Fig. 342

Schematic legend		
Item	**Schematic term**	**Description**
1	IMPLEMENT LEVER POSITION 1 SENSOR	Implement lever 1 position sensor
2	IMPLEMENT LEVER POSITION 2 SENSOR	Implement lever 2 position sensor
3	IMPLEMENT LEVER POSITION 3 SENSOR	Implement lever 3 position sensor
4	IMPLEMENT LEVER POSITION 4 SENSOR	Implement lever 4 position sensor
5	IMPLEMENT LEVER POSITION 5 SENSOR	Implement lever 5 position sensor
6	IMPLEMENT LEVER POSITION 6 SENSOR	Implement lever 6 position sensor
7	ARMREST ECU	Armrest module
8	HITCH DEPTH POSITION SENSOR	Hitch depth position sensor
--	SIG HITCH DEPTH POS	Signal hitch depth position sensor
--	SIG IMP1 LVR POS	Signal implement lever 1 position sensor

10.7.27.2 Auxiliary valve control levers

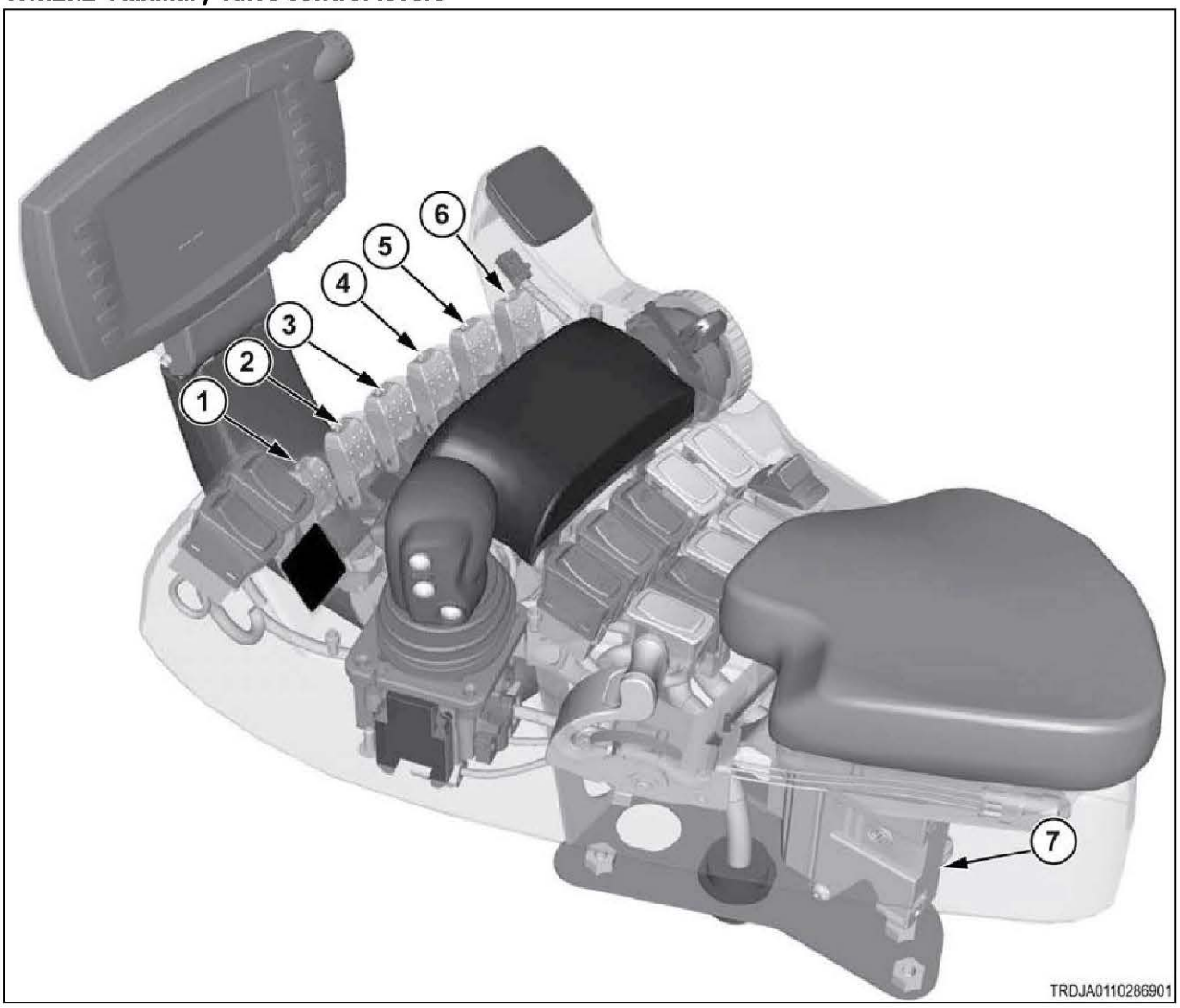

Fig. 343

(1)	Auxiliary valve 1 lever
(2)	Auxiliary valve 2 lever
(3)	Auxiliary valve 3 lever
(4)	Auxiliary valve 4 lever
(5)	Auxiliary valve 5 lever
(6)	Auxiliary valve 6 lever
(7)	Armrest module

10.7.28 Code SA 05 SPN 1919 FMI 01

The auxiliary valve lever 1 position sensor signal voltage is below normal.

The valve lever position sensor is a semi-intelligent hall effect sensor that internally contains a hall effect position sensor to accurately detect the lever's angular position, and circuitry to translate the hall effect sinusoidal data into a linear 0.5 to 4.5 volt output signal to the armrest module.

This error is reported when the sensor data otherwise appears to be valid, but the data range goes below 0.5 volts. The most likely cause is a faulty sensor.

Diagnosis and solution

1. Check the voltages at the sensor.

a) Open the armrest console to gain access to the sensor's harness connector.

b) Turn the key start switch to the on position, but do not start the engine.

c) Check the voltage between contacts 1 and 2 at the sensor connector.

The 12-volt fuse is known to be okay, because it also powers the armrest ECU itself, and this error could not be reported without power.

Result

- The voltage is not at or near 12 volts.

  Repair or replace the harness between the sensor and the armrest ECU.

  See step 2 to validate the repair.
- The voltage is at or near 12 volts.

  Continue.

d) Check the voltage between contacts 1 and 3 at the sensor connector while moving tthe lever through its full range of motion.

Result

The expected range is 0.5 to 4.5 volts.

- The voltage drops below 0.5 volts.

  Replace the sensor.

  See step 2 to validate the repair.
- The voltage range is 0.5 to 4.5 volts.

  Inspect the sensor and ECU harness connectors for loose or corroded terminals

  See step 2 to check if the error persists.

2. Check if the diagnostic code remains.

a) Inspect and clean the harness connector contacts.

b) Connect all the connectors.

c) Turn the battery disconnect switch to the on position.

d) Turn the key start switch to the on position.

e) Operate the machine at low idle.
f) Check if the diagnostic code remains.

Result

- SPN 1919 FMI 01 is not active.

  Stop.
- SPN 1919 FMI 01 is active.

  Failure of the armrest module is possible but not common. Exit the procedure and do the procedure again. If the diagnostic code remains active, replace the module.

  Stop.

10.7.28.1 Auxiliary valve control sensors electrical schematic

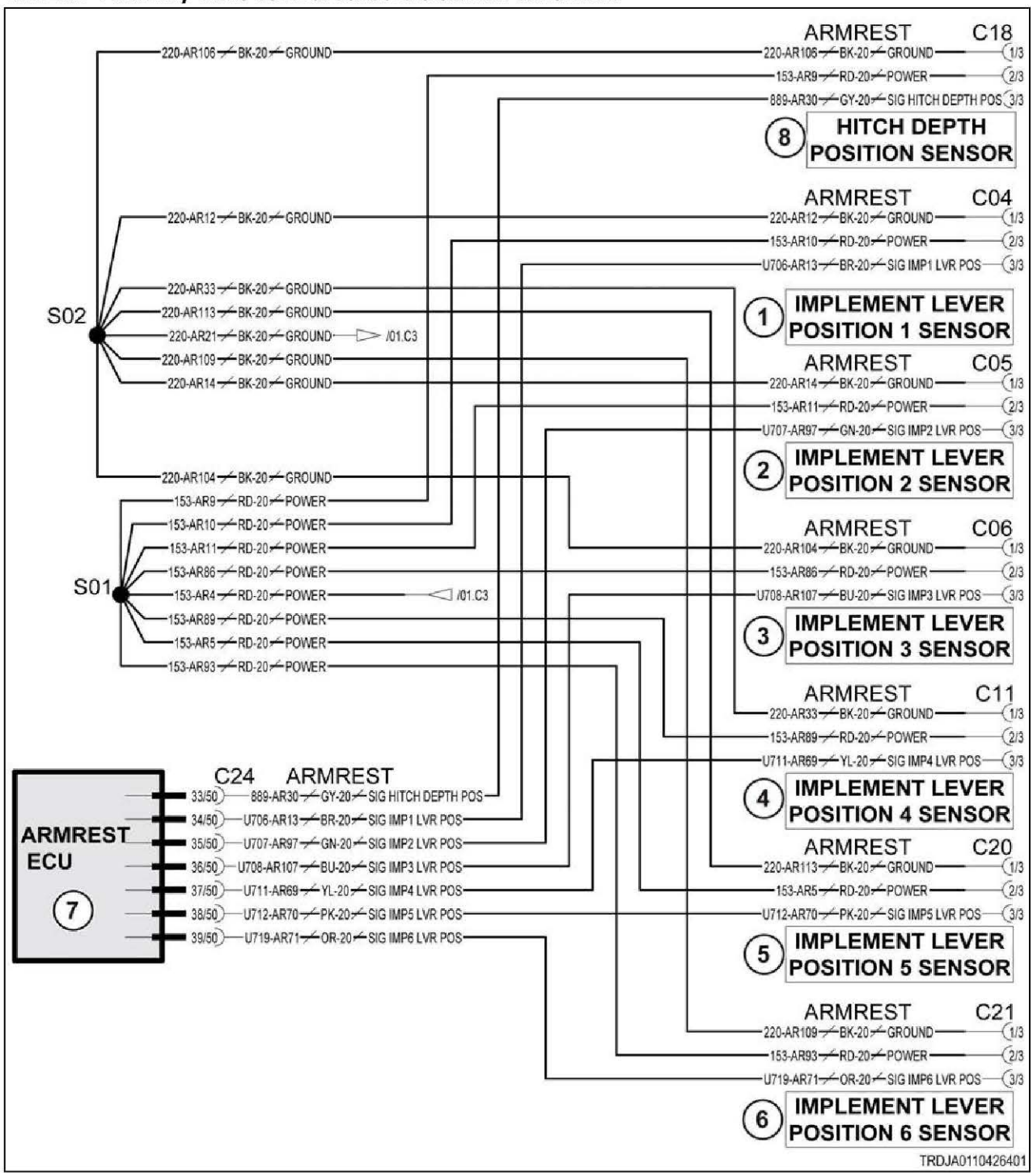

Fig. 344

Schematic legend		
Item	**Schematic term**	**Description**
1	IMPLEMENT LEVER POSITION 1 SENSOR	Implement lever 1 position sensor
2	IMPLEMENT LEVER POSITION 2 SENSOR	Implement lever 2 position sensor
3	IMPLEMENT LEVER POSITION 3 SENSOR	Implement lever 3 position sensor
4	IMPLEMENT LEVER POSITION 4 SENSOR	Implement lever 4 position sensor

Schematic legend		
Item	**Schematic term**	**Description**
5	IMPLEMENT LEVER POSITION 5 SENSOR	Implement lever 5 position sensor
6	IMPLEMENT LEVER POSITION 6 SENSOR	Implement lever 6 position sensor
7	ARMREST ECU	Armrest module
8	HITCH DEPTH POSITION SENSOR	Hitch depth position sensor
--	SIG HITCH DEPTH POS	Signal hitch depth position sensor
--	SIG IMP1 LVR POS	Signal implement lever 1 position sensor

10.7.28.2 Auxiliary valve control levers

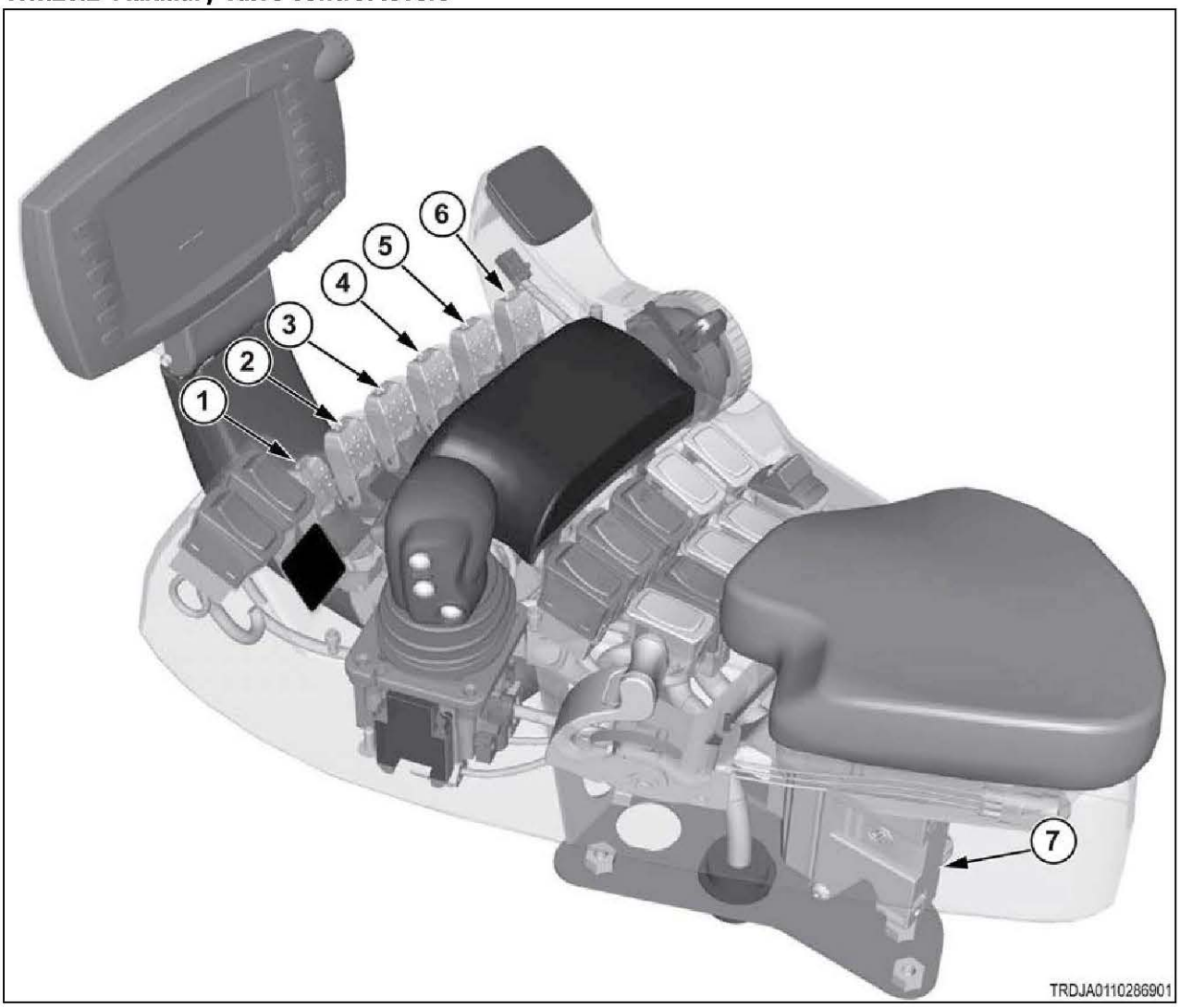

Fig. 345

(1)	Auxiliary valve 1 lever
(2)	Auxiliary valve 2 lever
(3)	Auxiliary valve 3 lever
(4)	Auxiliary valve 4 lever

(5)	Auxiliary valve 5 lever
(6)	Auxiliary valve 6 lever
(7)	Armrest module

10.7.29 Code SA 05 SPN 1919 FMI 03

The auxiliary valve lever 1 position sensor voltage is out of range - high.

The valve lever position sensor is a semi-intelligent hall effect sensor that internally contains a hall effect position sensor to accurately detect the lever's angular position, and circuitry to translate the hall effect sinusoidal data into a linear 0.5 to 4.5 volt output signal to the armrest module.

This error is reported when the sensor data is not valid and exceeds 4.5 volts. The most likely cause is a faulty sensor or short circuit to power.

Diagnosis and solution

1. Check the harness for short circuit.

a) Turn the start switch to the off position.
b) Turn the battery disconnect switch to the off position.
c) Disconnect the harness connector from the sensor.
d) Disconnect the harness connector from the armrest module.
e) Check the resistance from contact C24-34 to all other C24 contacts at the armrest connector.

Result

- One or more resistance measurement is at or near 0 ohms.

  Repair or replace the armrest harness.

  See step 3 to validate the repair.
- All resistance measurements were high (not near 0 ohms).

  See step 2 to check the sensor voltages.

2. Check the voltages at the sensor.

a) Reconnect the sensor and ECU.
b) Turn the key start switch to the on position, but do not start the engine.
c) Check the voltage between contacts 1 and 2 at the sensor connector.

The 12-volt fuse is known to be okay, because it also powers the armrest ECU itself, and this error could not be reported without power.

Result

- The voltage is not at or near 12 volts.

  Repair or replace the harness between the sensor and the armrest ECU.

  See step 3 to validate the repair.
- The voltage is at or near 12 volts.

  Continue.

d) Check the voltage between contacts 1 and 3 at the sensor connector while moving tthe lever through its full range of motion.

Result

The expected range is 0.5 to 4.5 volts.

- The voltage exceeds 4.5 volts.

  Replace the sensor.

  See step 2 to validate the repair.

- The voltage range is 0.5 to 4.5 volts.

  The armrest ECU is suspect.

  See step 3 to check if the error persists.

3. Check if the diagnostic code remains.

a) Inspect and clean the harness connector contacts.
b) Connect all the connectors.
c) Turn the battery disconnect switch to the on position.
d) Turn the key start switch to the on position.
e) Operate the machine at low idle.
f) Check if the diagnostic code remains.

Result

- SPN 1919 FMI 03 is not active.

  Stop.
- SPN 1919 FMI 03 is active.

  Failure of the armrest module is possible but not common. Exit the procedure and do the procedure again. If the diagnostic code remains active, replace the module.

  Stop.

10.7.29.1 Auxiliary valve control sensors electrical schematic

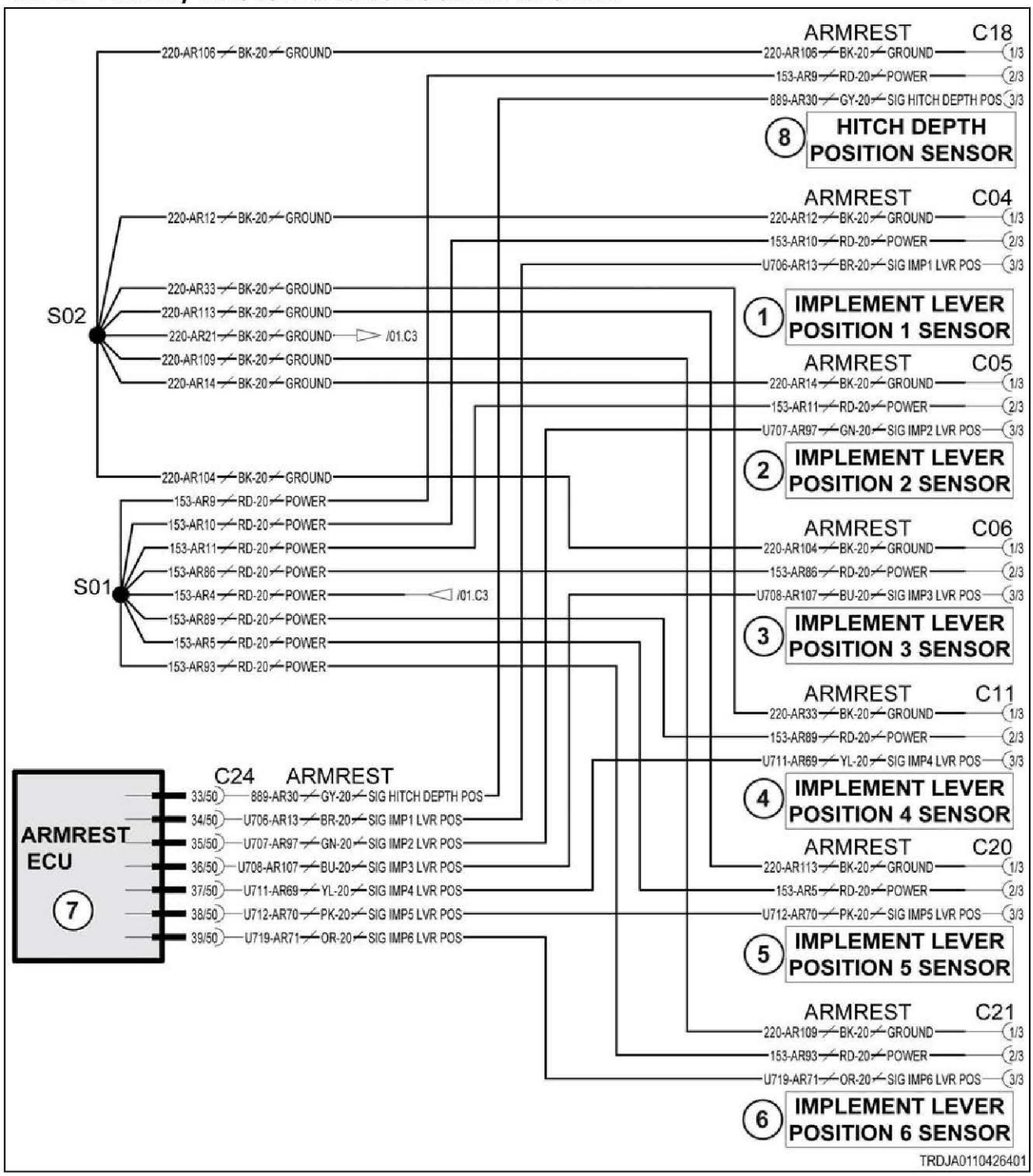

Fig. 346

Schematic legend		
Item	**Schematic term**	**Description**
1	IMPLEMENT LEVER POSITION 1 SENSOR	Implement lever 1 position sensor
2	IMPLEMENT LEVER POSITION 2 SENSOR	Implement lever 2 position sensor
3	IMPLEMENT LEVER POSITION 3 SENSOR	Implement lever 3 position sensor
4	IMPLEMENT LEVER POSITION 4 SENSOR	Implement lever 4 position sensor

Schematic legend		
Item	**Schematic term**	**Description**
5	IMPLEMENT LEVER POSITION 5 SENSOR	Implement lever 5 position sensor
6	IMPLEMENT LEVER POSITION 6 SENSOR	Implement lever 6 position sensor
7	ARMREST ECU	Armrest module
8	HITCH DEPTH POSITION SENSOR	Hitch depth position sensor
--	SIG HITCH DEPTH POS	Signal hitch depth position sensor
--	SIG IMP1 LVR POS	Signal implement lever 1 position sensor

10.7.29.2 Auxiliary valve control levers

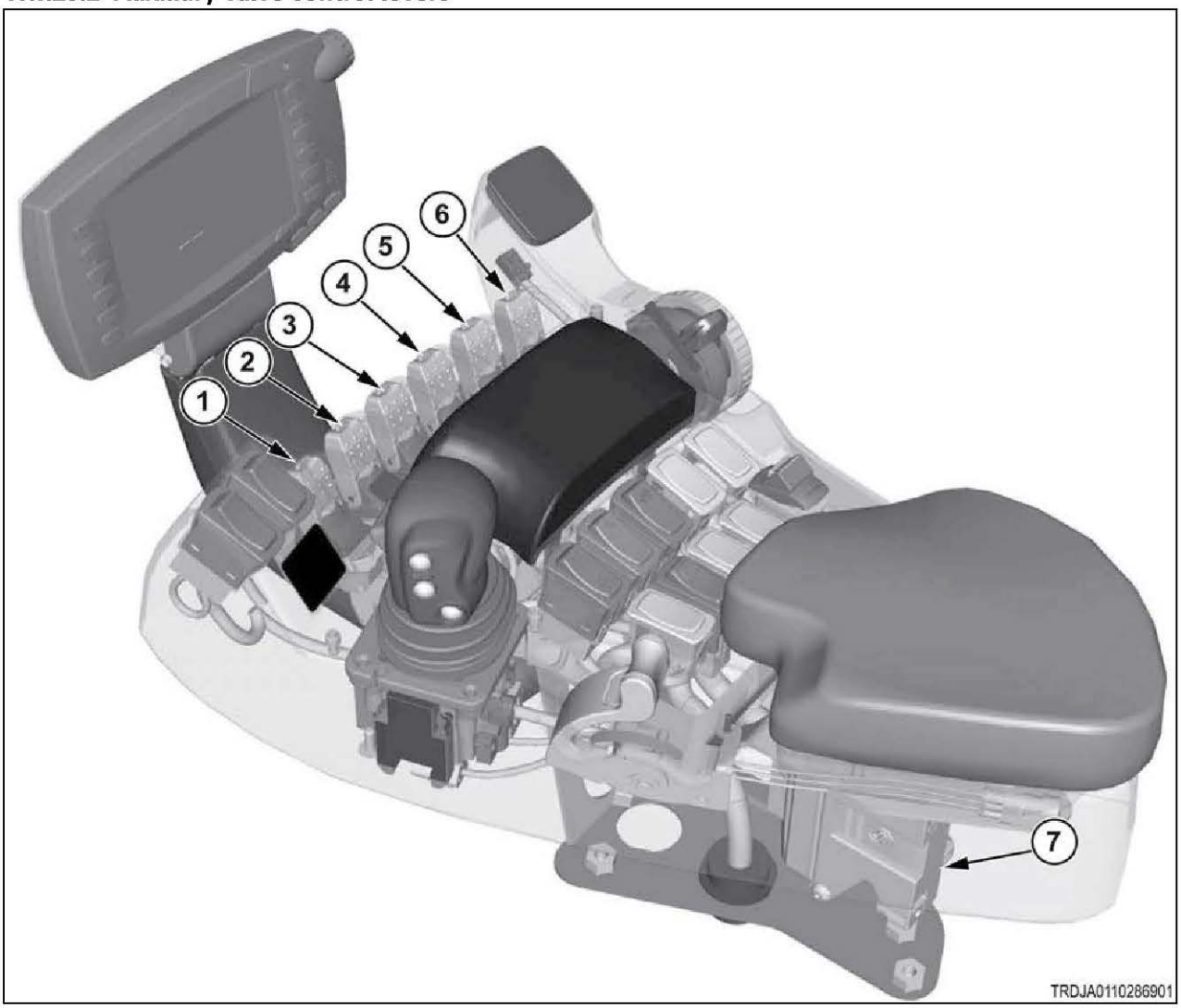

Fig. 347

(1)	Auxiliary valve 1 lever
(2)	Auxiliary valve 2 lever
(3)	Auxiliary valve 3 lever
(4)	Auxiliary valve 4 lever

(5)	Auxiliary valve 5 lever
(6)	Auxiliary valve 6 lever
(7)	Armrest module

10.7.30 Code SA 05 SPN 1919 FMI 04

The auxiliary valve lever 1 position sensor signal voltage is out of range - low.

The valve lever position sensor is a semi-intelligent hall effect sensor that internally contains a hall effect position sensor to accurately detect the lever's angular position, and circuitry to translate the hall effect sinusoidal data into a linear 0.5 to 4.5 volt output signal to the armrest module.

This error is reported when the sensor data is not valid and drops below 0.5 volts. The most likely cause is a faulty sensor or short circuit to ground.

Diagnosis and solution

1. Check the harness for short circuit.

a) Turn the start switch to the off position.
b) Turn the battery disconnect switch to the off position.
c) Disconnect the harness connector from the sensor.
d) Disconnect the harness connector from the armrest module.
e) Check the resistance from contact C24-34 to all other C24 contacts at the armrest connector.

Result

- One or more resistance measurement is at or near 0 ohms.

  Repair or replace the armrest harness.

  See step 3 to validate the repair.
- All resistance measurements were high (not near 0 ohms).

  See step 2 to check the sensor voltages.

2. Check the voltages at the sensor.

a) Reconnect the sensor and ECU.
b) Turn the key start switch to the on position, but do not start the engine.
c) Check the voltage between contacts 1 and 2 at the sensor connector.

The 12-volt fuse is known to be okay, because it also powers the armrest ECU itself, and this error could not be reported without power.

Result

- The voltage is not at or near 12 volts.

  Repair or replace the harness between the sensor and the armrest ECU.

  See step 3 to validate the repair.
- The voltage is at or near 12 volts.

  Continue.

d) Check the voltage between contacts 1 and 3 at the sensor connector while moving tthe lever through its full range of motion.

Result

The expected range is 0.5 to 4.5 volts.

- The voltage drops below 0.5 volts.

  Replace the sensor.

  See step 2 to validate the repair.

- The voltage range is 0.5 to 4.5 volts.

  The armrest ECU is suspect.

  See step 3 to check if the error persists.

3. Check if the diagnostic code remains.

a) Inspect and clean the harness connector contacts.
b) Connect all the connectors.
c) Turn the battery disconnect switch to the on position.
d) Turn the key start switch to the on position.
e) Operate the machine at low idle.
f) Check if the diagnostic code remains.

Result

- SPN 1919 FMI 04 is not active.

  Stop.
- SPN 1919 FMI 04 is active.

  Failure of the armrest module is possible but not common. Exit the procedure and do the procedure again. If the diagnostic code remains active, replace the module.

  Stop.

10.7.30.1 Auxiliary valve control sensors electrical schematic

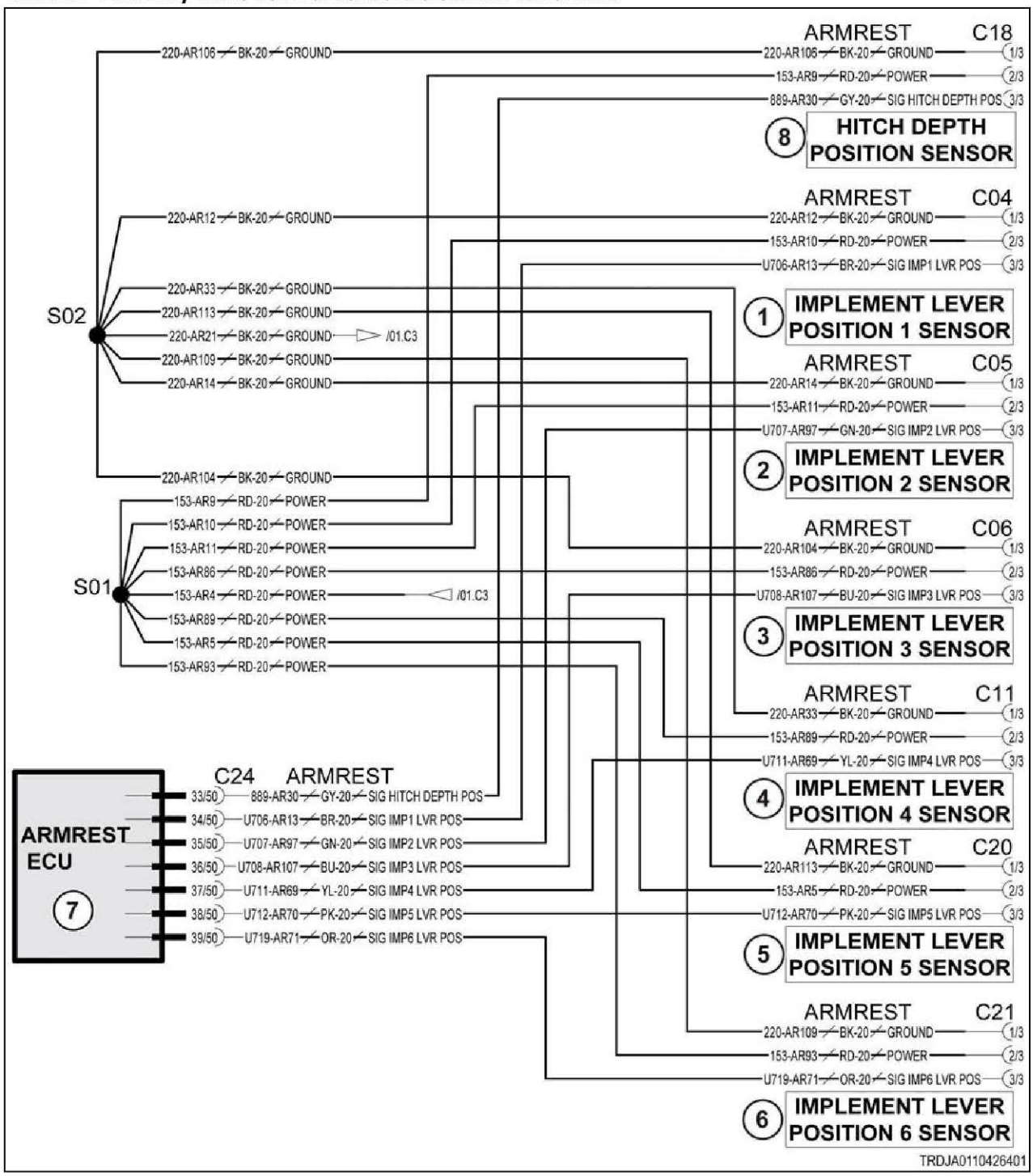

Fig. 348

Schematic legend		
Item	**Schematic term**	**Description**
1	IMPLEMENT LEVER POSITION 1 SENSOR	Implement lever 1 position sensor
2	IMPLEMENT LEVER POSITION 2 SENSOR	Implement lever 2 position sensor
3	IMPLEMENT LEVER POSITION 3 SENSOR	Implement lever 3 position sensor
4	IMPLEMENT LEVER POSITION 4 SENSOR	Implement lever 4 position sensor

Schematic legend		
Item	**Schematic term**	**Description**
5	IMPLEMENT LEVER POSITION 5 SENSOR	Implement lever 5 position sensor
6	IMPLEMENT LEVER POSITION 6 SENSOR	Implement lever 6 position sensor
7	ARMREST ECU	Armrest module
8	HITCH DEPTH POSITION SENSOR	Hitch depth position sensor
--	SIG HITCH DEPTH POS	Signal hitch depth position sensor
--	SIG IMP1 LVR POS	Signal implement lever 1 position sensor

10.7.30.2 Auxiliary valve control levers

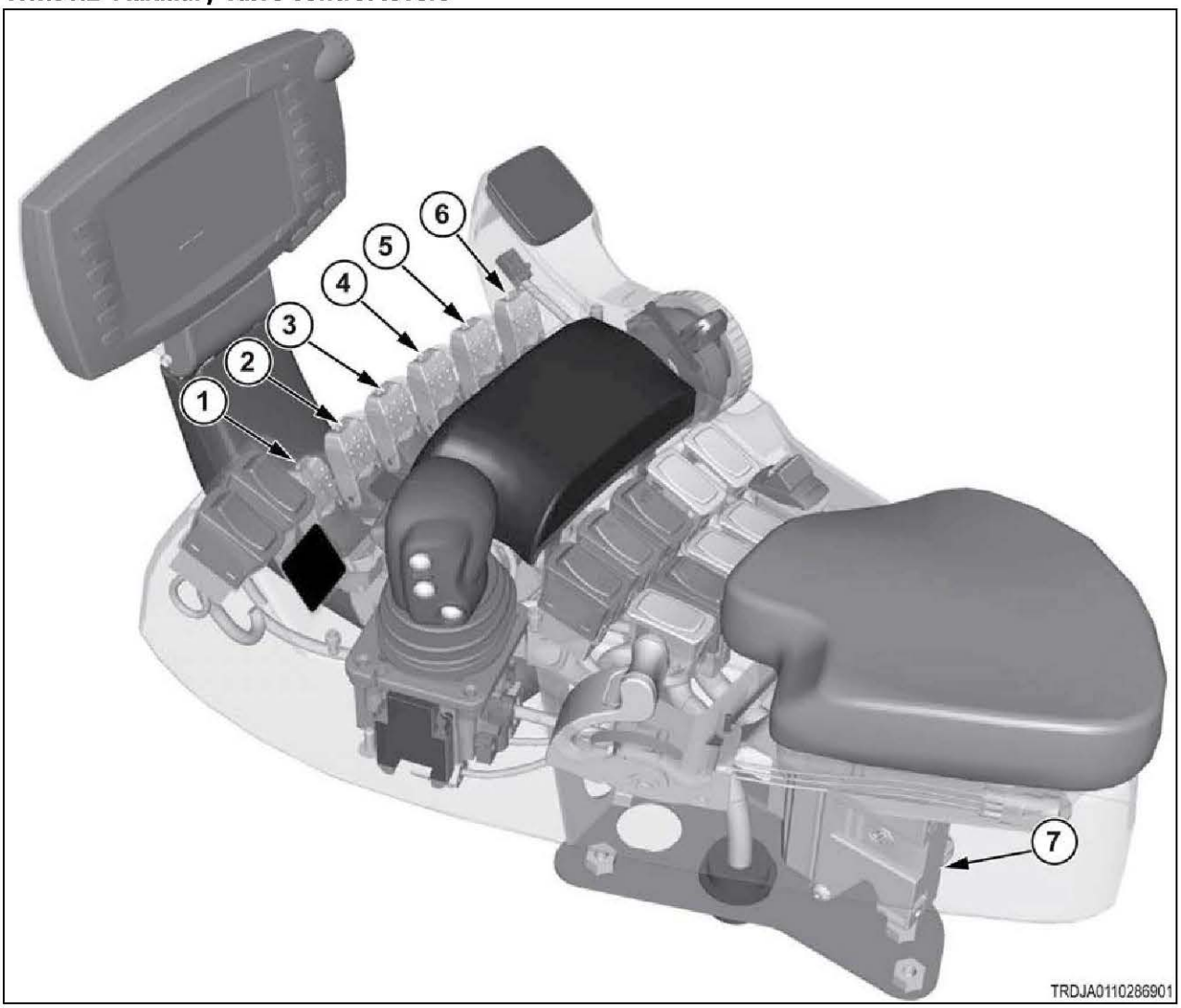

Fig. 349

(1)	Auxiliary valve 1 lever
(2)	Auxiliary valve 2 lever
(3)	Auxiliary valve 3 lever
(4)	Auxiliary valve 4 lever

(5)	Auxiliary valve 5 lever
(6)	Auxiliary valve 6 lever
(7)	Armrest module

10.7.31 Code SA 05 SPN 1931 FMI 00

The auxiliary valve lever 2 position sensor signal is above normal.

The valve lever position sensor is a semi-intelligent hall effect sensor that internally contains a hall effect position sensor to accurately detect the lever's angular position, and circuitry to translate the hall effect sinusoidal data into a linear 0.5 to 4.5 volt output signal to the armrest module.

This error is reported when the sensor data otherwise appears to be valid, but the data range exceeds 4.5 volts. The most likely cause is a faulty sensor.

Diagnosis and solution

1. Check the voltages at the sensor.

a) Open the armrest console to gain access to the sensor's harness connector.

b) Turn the key start switch to the on position, but do not start the engine.

c) Check the voltage between contacts 1 and 2 at the sensor connector.

The 12-volt fuse is known to be okay, because it also powers the armrest ECU itself, and this error could not be reported without power.

Result

- The voltage is not at or near 12 volts.

  Repair or replace the harness between the sensor and the armrest ECU.

  See step 2 to validate the repair.
- The voltage is at or near 12 volts.

  Continue.

d) Check the voltage between contacts 1 and 3 at the sensor connector while moving tthe lever through its full range of motion.

Result

The expected range is 0.5 to 4.5 volts.

- The voltage exceeds 4.5 volts.

  Replace the sensor.

  See step 2 to validate the repair.
- The voltage range is 0.5 to 4.5 volts.

  Inspect the sensor and ECU harness connectors for loose or corroded terminals

  See step 2 to check if the error persists.

2. Check if the diagnostic code remains.

a) Inspect and clean the harness connector contacts.

b) Connect all the connectors.

c) Turn the battery disconnect switch to the on position.

d) Turn the key start switch to the on position.

e) Operate the machine at low idle.

f) Check if the diagnostic code remains.

Result

- SPN 1931 FMI 00 is not active.

  Stop.
- SPN 1931 FMI 00 is active.

  Failure of the armrest module is possible but not common. Exit the procedure and do the procedure again. If the diagnostic code remains active, replace the module.

  Stop.

10.7.31.1 Auxiliary valve control sensors electrical schematic

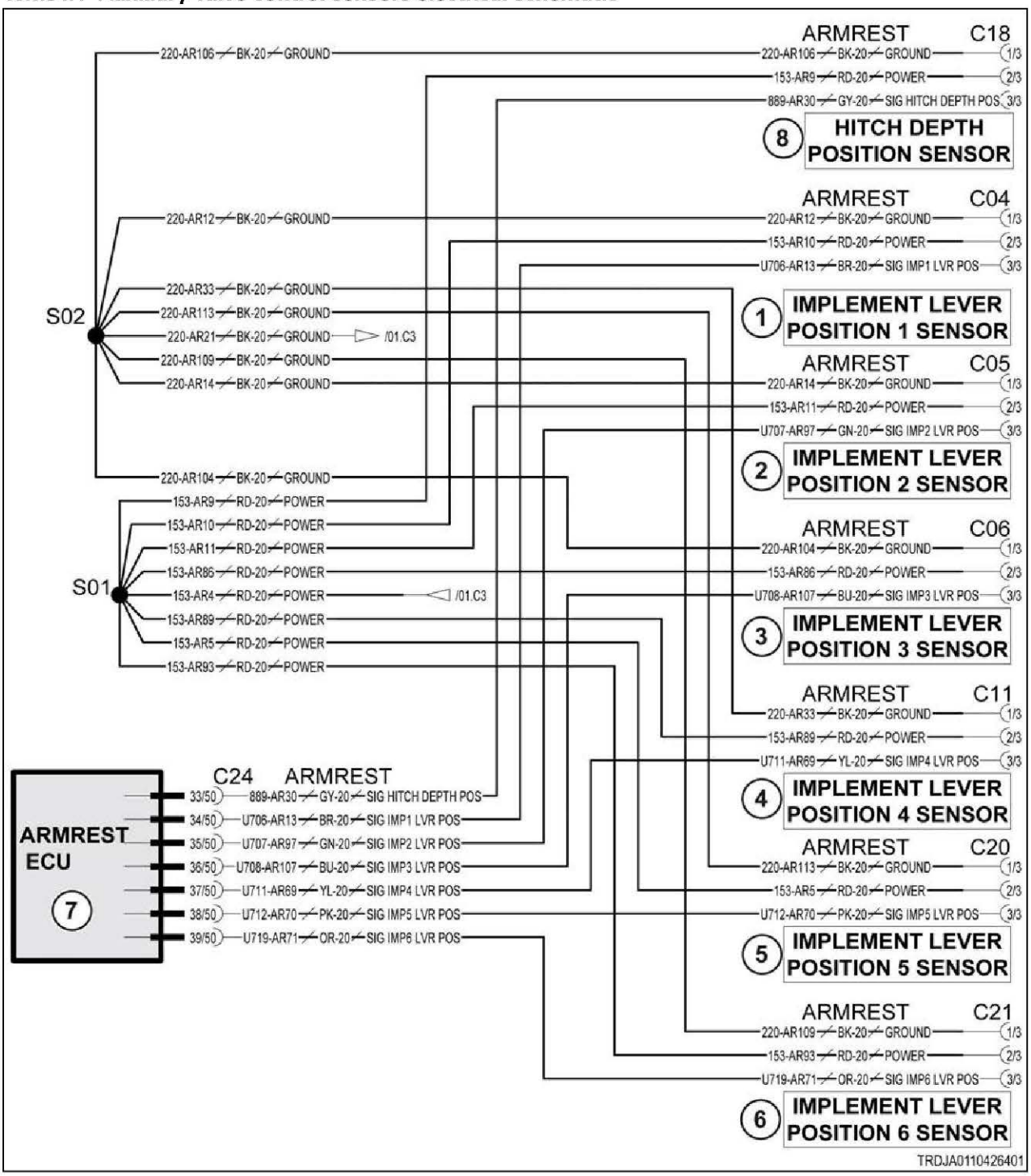

Fig. 350

Schematic legend		
Item	**Schematic term**	**Description**
1	IMPLEMENT LEVER POSITION 1 SENSOR	Implement lever 1 position sensor
2	IMPLEMENT LEVER POSITION 2 SENSOR	Implement lever 2 position sensor
3	IMPLEMENT LEVER POSITION 3 SENSOR	Implement lever 3 position sensor
4	IMPLEMENT LEVER POSITION 4 SENSOR	Implement lever 4 position sensor
5	IMPLEMENT LEVER POSITION 5 SENSOR	Implement lever 5 position sensor
6	IMPLEMENT LEVER POSITION 6 SENSOR	Implement lever 6 position sensor
7	ARMREST ECU	Armrest module
8	HITCH DEPTH POSITION SENSOR	Hitch depth position sensor
--	SIG HITCH DEPTH POS	Signal hitch depth position sensor
--	SIG IMP1 LVR POS	Signal implement lever 1 position sensor

10.7.31.2 Auxiliary valve control levers

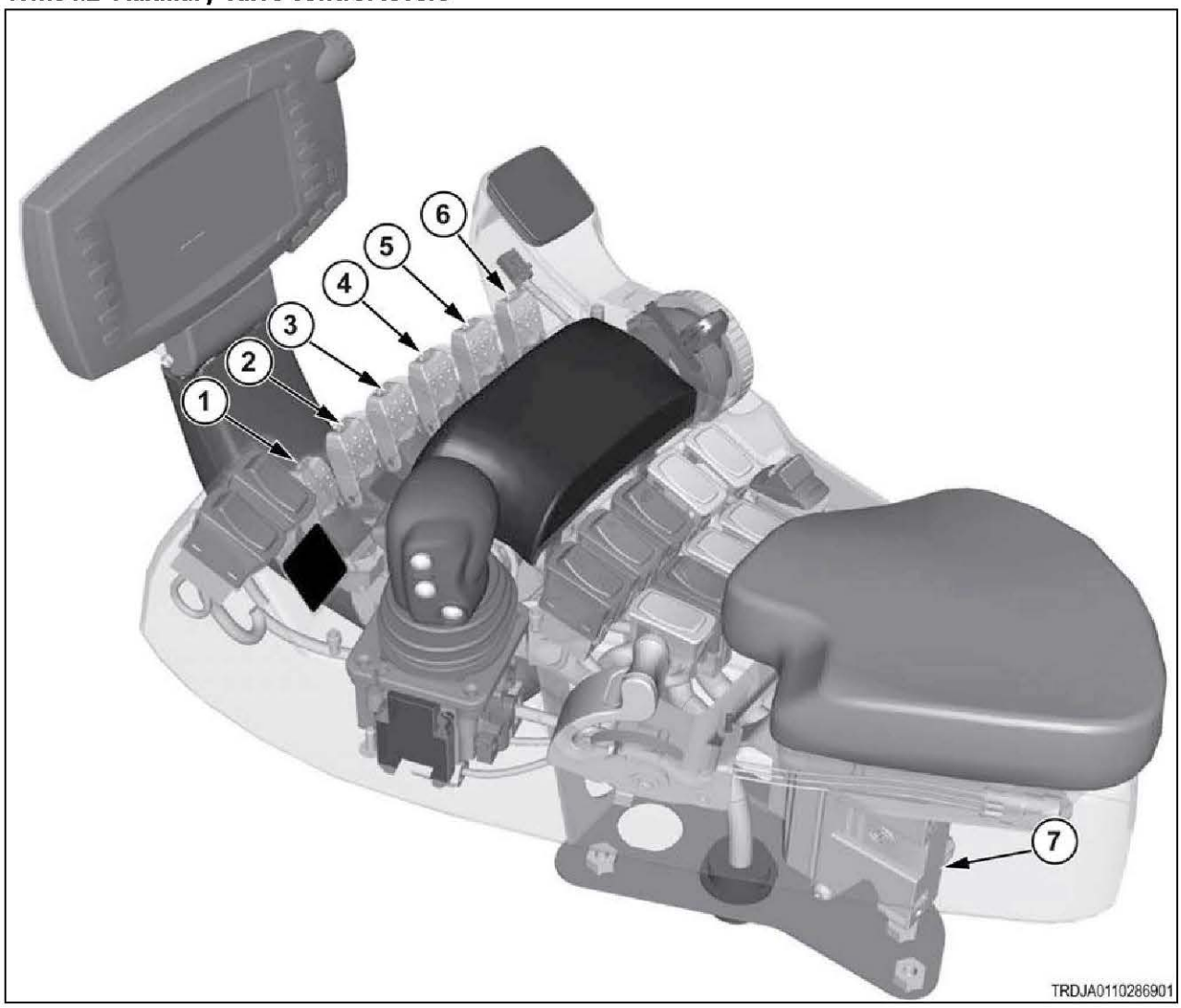

Fig. 351

(1)	Auxiliary valve 1 lever
(2)	Auxiliary valve 2 lever
(3)	Auxiliary valve 3 lever
(4)	Auxiliary valve 4 lever
(5)	Auxiliary valve 5 lever
(6)	Auxiliary valve 6 lever
(7)	Armrest module

10.7.32 Code SA 05 SPN 1931 FMI 01

The auxiliary valve lever 2 position sensor signal voltage is below normal.

The valve lever position sensor is a semi-intelligent hall effect sensor that internally contains a hall effect position sensor to accurately detect the lever's angular position, and circuitry to translate the hall effect sinusoidal data into a linear 0.5 to 4.5 volt output signal to the armrest module.

This error is reported when the sensor data otherwise appears to be valid, but the data range goes below 0.5 volts. The most likely cause is a faulty sensor.

Diagnosis and solution

1. Check the voltages at the sensor.

a) Open the armrest console to gain access to the sensor's harness connector.

b) Turn the key start switch to the on position, but do not start the engine.

c) Check the voltage between contacts 1 and 2 at the sensor connector.

The 12-volt fuse is known to be okay, because it also powers the armrest ECU itself, and this error could not be reported without power.

Result

- The voltage is not at or near 12 volts.

  Repair or replace the harness between the sensor and the armrest ECU.

  See step 2 to validate the repair.
- The voltage is at or near 12 volts.

  Continue.

d) Check the voltage between contacts 1 and 3 at the sensor connector while moving tthe lever through its full range of motion.

Result

The expected range is 0.5 to 4.5 volts.

- The voltage drops below 0.5 volts.

  Replace the sensor.

  See step 2 to validate the repair.
- The voltage range is 0.5 to 4.5 volts.

  Inspect the sensor and ECU harness connectors for loose or corroded terminals

  See step 2 to check if the error persists.

2. Check if the diagnostic code remains.

a) Inspect and clean the harness connector contacts.

b) Connect all the connectors.

c) Turn the battery disconnect switch to the on position.

d) Turn the key start switch to the on position.

e) Operate the machine at low idle.
f) Check if the diagnostic code remains.

Result

- SPN 1931 FMI 01 is not active.

  Stop.
- SPN 1931 FMI 01 is active.

  Failure of the armrest module is possible but not common. Exit the procedure and do the procedure again. If the diagnostic code remains active, replace the module.

  Stop.

10.7.32.1 Auxiliary valve control sensors electrical schematic

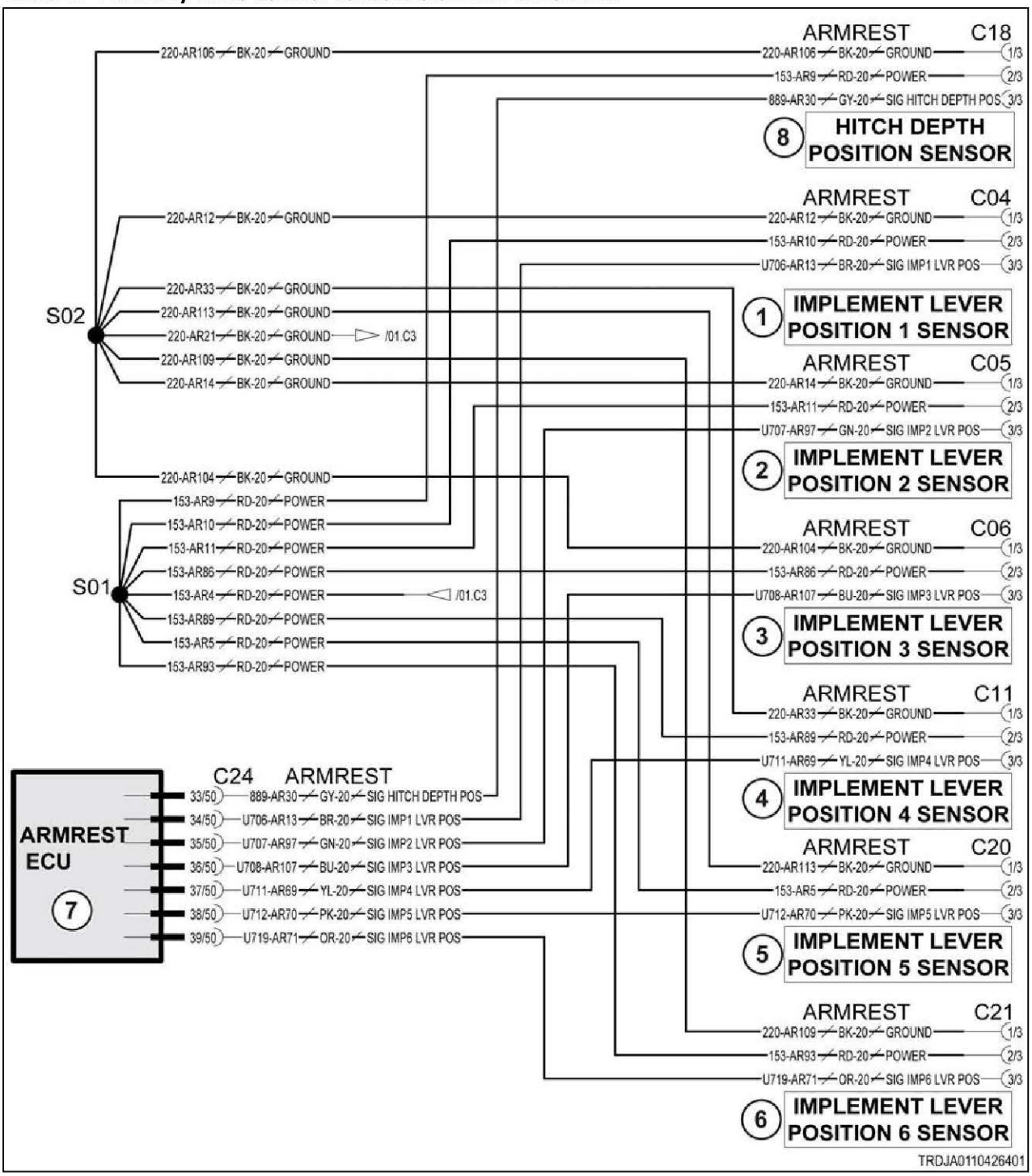

Fig. 352

Schematic legend		
Item	**Schematic term**	**Description**
1	IMPLEMENT LEVER POSITION 1 SENSOR	Implement lever 1 position sensor
2	IMPLEMENT LEVER POSITION 2 SENSOR	Implement lever 2 position sensor
3	IMPLEMENT LEVER POSITION 3 SENSOR	Implement lever 3 position sensor
4	IMPLEMENT LEVER POSITION 4 SENSOR	Implement lever 4 position sensor

Schematic legend		
Item	**Schematic term**	**Description**
5	IMPLEMENT LEVER POSITION 5 SENSOR	Implement lever 5 position sensor
6	IMPLEMENT LEVER POSITION 6 SENSOR	Implement lever 6 position sensor
7	ARMREST ECU	Armrest module
8	HITCH DEPTH POSITION SENSOR	Hitch depth position sensor
--	SIG HITCH DEPTH POS	Signal hitch depth position sensor
--	SIG IMP1 LVR POS	Signal implement lever 1 position sensor

10.7.32.2 Auxiliary valve control levers

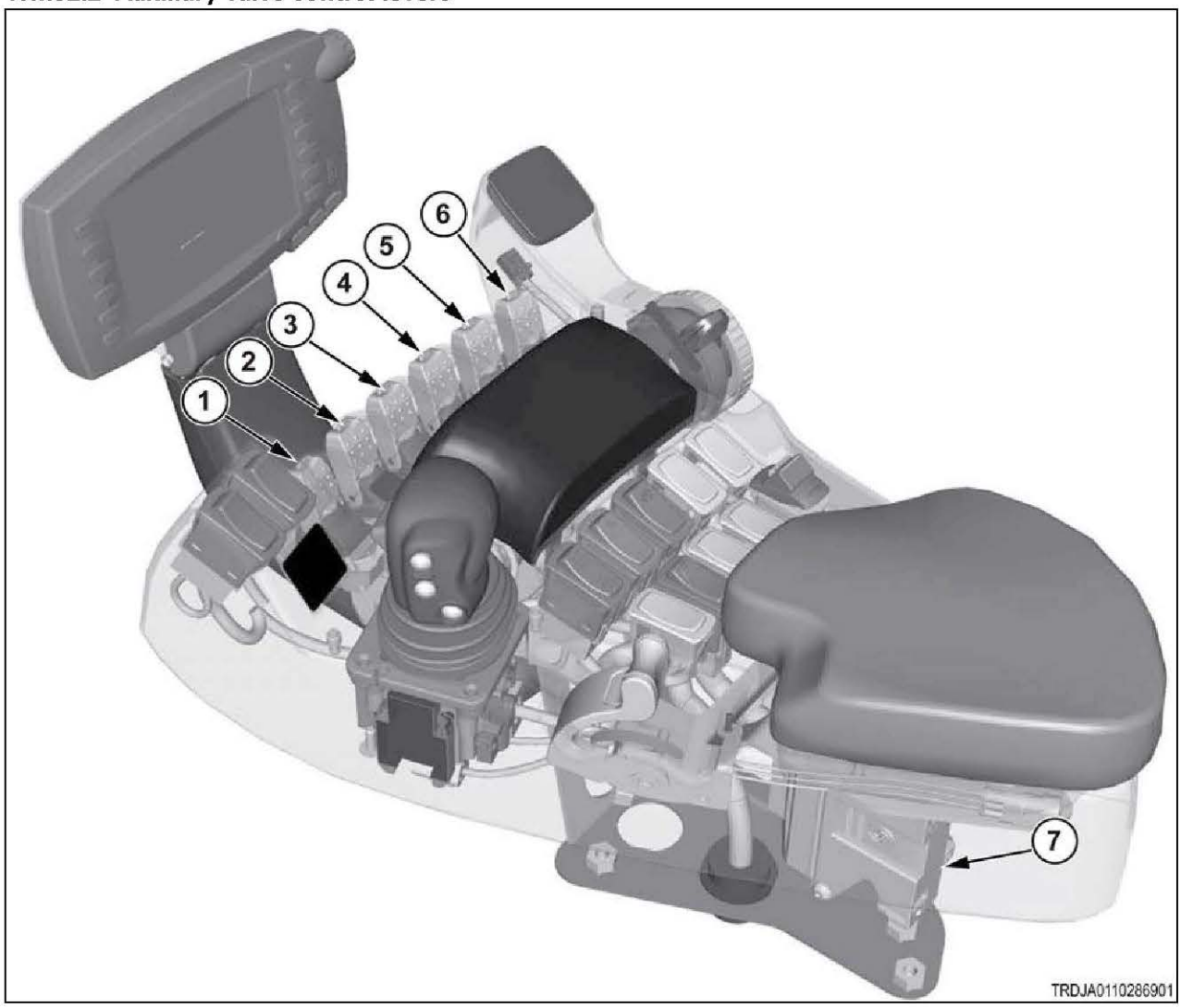

Fig. 353

(1)	Auxiliary valve 1 lever
(2)	Auxiliary valve 2 lever
(3)	Auxiliary valve 3 lever
(4)	Auxiliary valve 4 lever

(5)	Auxiliary valve 5 lever
(6)	Auxiliary valve 6 lever
(7)	Armrest module

10.7.33 Code SA 05 SPN 1931 FMI 03

The auxiliary valve lever 2 position sensor voltage is out of range - high.

The valve lever position sensor is a semi-intelligent hall effect sensor that internally contains a hall effect position sensor to accurately detect the lever's angular position, and circuitry to translate the hall effect sinusoidal data into a linear 0.5 to 4.5 volt output signal to the armrest module.

This error is reported when the sensor data is not valid and exceeds 4.5 volts. The most likely cause is a faulty sensor or short circuit to power.

Diagnosis and solution

1. Check the harness for short circuit.

a) Turn the start switch to the off position.
b) Turn the battery disconnect switch to the off position.
c) Disconnect the harness connector from the sensor.
d) Disconnect the harness connector from the armrest module.
e) Check the resistance from contact C24-35 to all other C24 contacts at the armrest connector.

Result

- One or more resistance measurement is at or near 0 ohms.

  Repair or replace the armrest harness.

  See step 3 to validate the repair.
- All resistance measurements were high (not near 0 ohms).

  See step 2 to check the sensor voltages.

2. Check the voltages at the sensor.

a) Reconnect the sensor and ECU.
b) Turn the key start switch to the on position, but do not start the engine.
c) Check the voltage between contacts 1 and 2 at the sensor connector.

The 12-volt fuse is known to be okay, because it also powers the armrest ECU itself, and this error could not be reported without power.

Result

- The voltage is not at or near 12 volts.

  Repair or replace the harness between the sensor and the armrest ECU.

  See step 3 to validate the repair.
- The voltage is at or near 12 volts.

  Continue.

d) Check the voltage between contacts 1 and 3 at the sensor connector while moving tthe lever through its full range of motion.

Result

The expected range is 0.5 to 4.5 volts.

- The voltage exceeds 4.5 volts.

  Replace the sensor.

  See step 2 to validate the repair.

- The voltage range is 0.5 to 4.5 volts.

  The armrest ECU is suspect.

  See step 3 to check if the error persists.

3. Check if the diagnostic code remains.

a) Inspect and clean the harness connector contacts.
b) Connect all the connectors.
c) Turn the battery disconnect switch to the on position.
d) Turn the key start switch to the on position.
e) Operate the machine at low idle.
f) Check if the diagnostic code remains.

Result

- SPN 1931 FMI 03 is not active.

  Stop.
- SPN 1931 FMI 03 is active.

  Failure of the armrest module is possible but not common. Exit the procedure and do the procedure again. If the diagnostic code remains active, replace the module.

  Stop.

10.7.33.1 Auxiliary valve control sensors electrical schematic

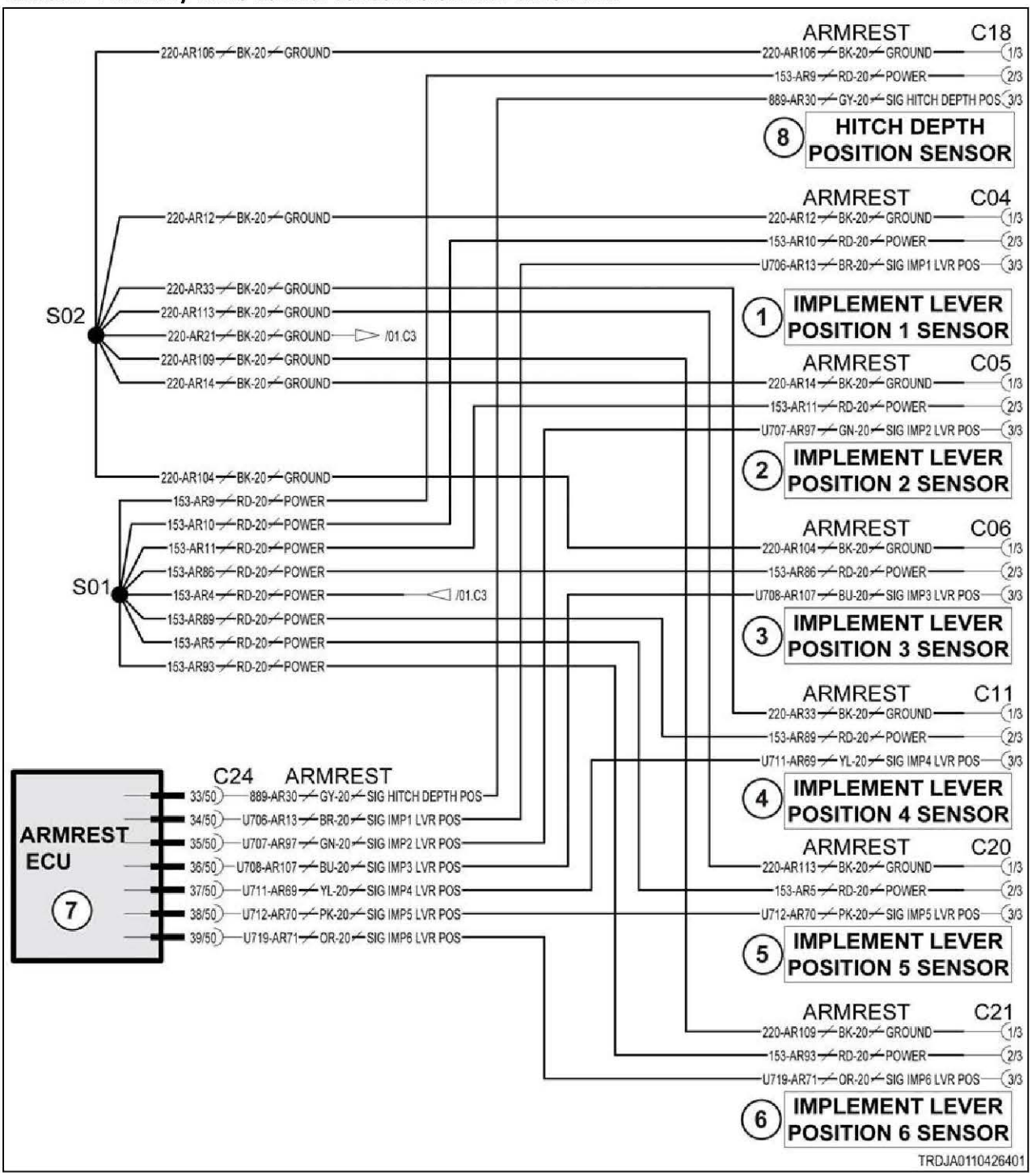

Fig. 354

Schematic legend		
Item	**Schematic term**	**Description**
1	IMPLEMENT LEVER POSITION 1 SENSOR	Implement lever 1 position sensor
2	IMPLEMENT LEVER POSITION 2 SENSOR	Implement lever 2 position sensor
3	IMPLEMENT LEVER POSITION 3 SENSOR	Implement lever 3 position sensor
4	IMPLEMENT LEVER POSITION 4 SENSOR	Implement lever 4 position sensor

Schematic legend		
Item	**Schematic term**	**Description**
5	IMPLEMENT LEVER POSITION 5 SENSOR	Implement lever 5 position sensor
6	IMPLEMENT LEVER POSITION 6 SENSOR	Implement lever 6 position sensor
7	ARMREST ECU	Armrest module
8	HITCH DEPTH POSITION SENSOR	Hitch depth position sensor
--	SIG HITCH DEPTH POS	Signal hitch depth position sensor
--	SIG IMP1 LVR POS	Signal implement lever 1 position sensor

10.7.33.2 Auxiliary valve control levers

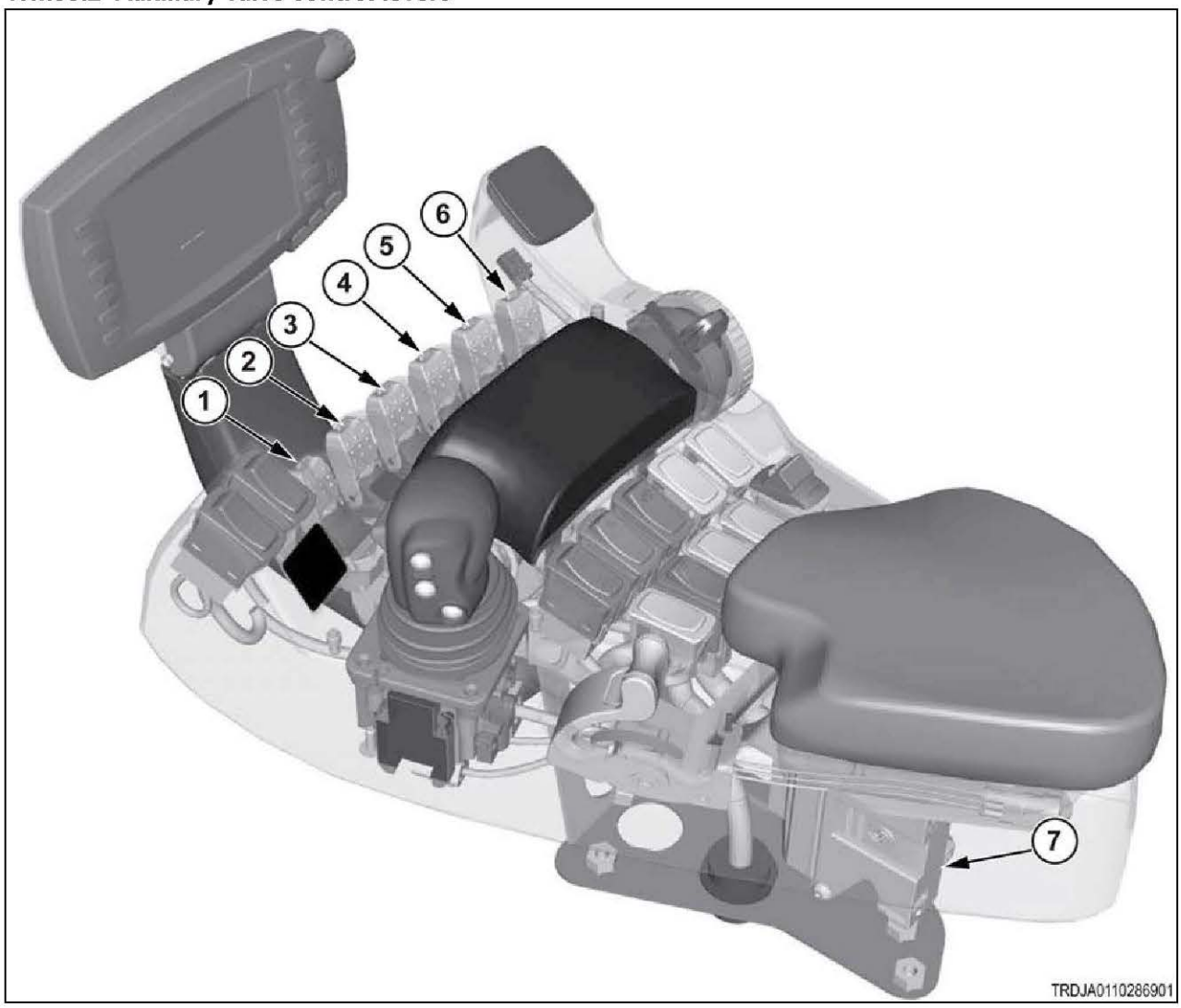

Fig. 355

(1)	Auxiliary valve 1 lever
(2)	Auxiliary valve 2 lever
(3)	Auxiliary valve 3 lever
(4)	Auxiliary valve 4 lever

(5)	Auxiliary valve 5 lever
(6)	Auxiliary valve 6 lever
(7)	Armrest module

10.7.34 Code SA 05 SPN 1931 FMI 04

The auxiliary valve lever 2 position sensor signal voltage is out of range - low.

The valve lever position sensor is a semi-intelligent hall effect sensor that internally contains a hall effect position sensor to accurately detect the lever's angular position, and circuitry to translate the hall effect sinusoidal data into a linear 0.5 to 4.5 volt output signal to the armrest module.

This error is reported when the sensor data is not valid and drops below 0.5 volts. The most likely cause is a faulty sensor or short circuit to ground.

Diagnosis and solution

1. Check the harness for short circuit.

a) Turn the start switch to the off position.
b) Turn the battery disconnect switch to the off position.
c) Disconnect the harness connector from the sensor.
d) Disconnect the harness connector from the armrest module.
e) Check the resistance from contact C24-35 to all other C24 contacts at the armrest connector.

Result

- One or more resistance measurement is at or near 0 ohms.

  Repair or replace the armrest harness.

  See step 3 to validate the repair.
- All resistance measurements were high (not near 0 ohms).

  See step 2 to check the sensor voltages.

2. Check the voltages at the sensor.

a) Reconnect the sensor and ECU.
b) Turn the key start switch to the on position, but do not start the engine.
c) Check the voltage between contacts 1 and 2 at the sensor connector.

The 12-volt fuse is known to be okay, because it also powers the armrest ECU itself, and this error could not be reported without power.

Result

- The voltage is not at or near 12 volts.

  Repair or replace the harness between the sensor and the armrest ECU.

  See step 3 to validate the repair.
- The voltage is at or near 12 volts.

  Continue.

d) Check the voltage between contacts 1 and 3 at the sensor connector while moving tthe lever through its full range of motion.

Result

The expected range is 0.5 to 4.5 volts.

- The voltage drops below 0.5 volts.

  Replace the sensor.

  See step 2 to validate the repair.

- The voltage range is 0.5 to 4.5 volts.

  The armrest ECU is suspect.

  See step 3 to check if the error persists.

3. Check if the diagnostic code remains.

a) Inspect and clean the harness connector contacts.
b) Connect all the connectors.
c) Turn the battery disconnect switch to the on position.
d) Turn the key start switch to the on position.
e) Operate the machine at low idle.
f) Check if the diagnostic code remains.

Result

- SPN 1931 FMI 04 is not active.

  Stop.
- SPN 1931 FMI 04 is active.

  Failure of the armrest module is possible but not common. Exit the procedure and do the procedure again. If the diagnostic code remains active, replace the module.

  Stop.

10.7.34.1 Auxiliary valve control sensors electrical schematic

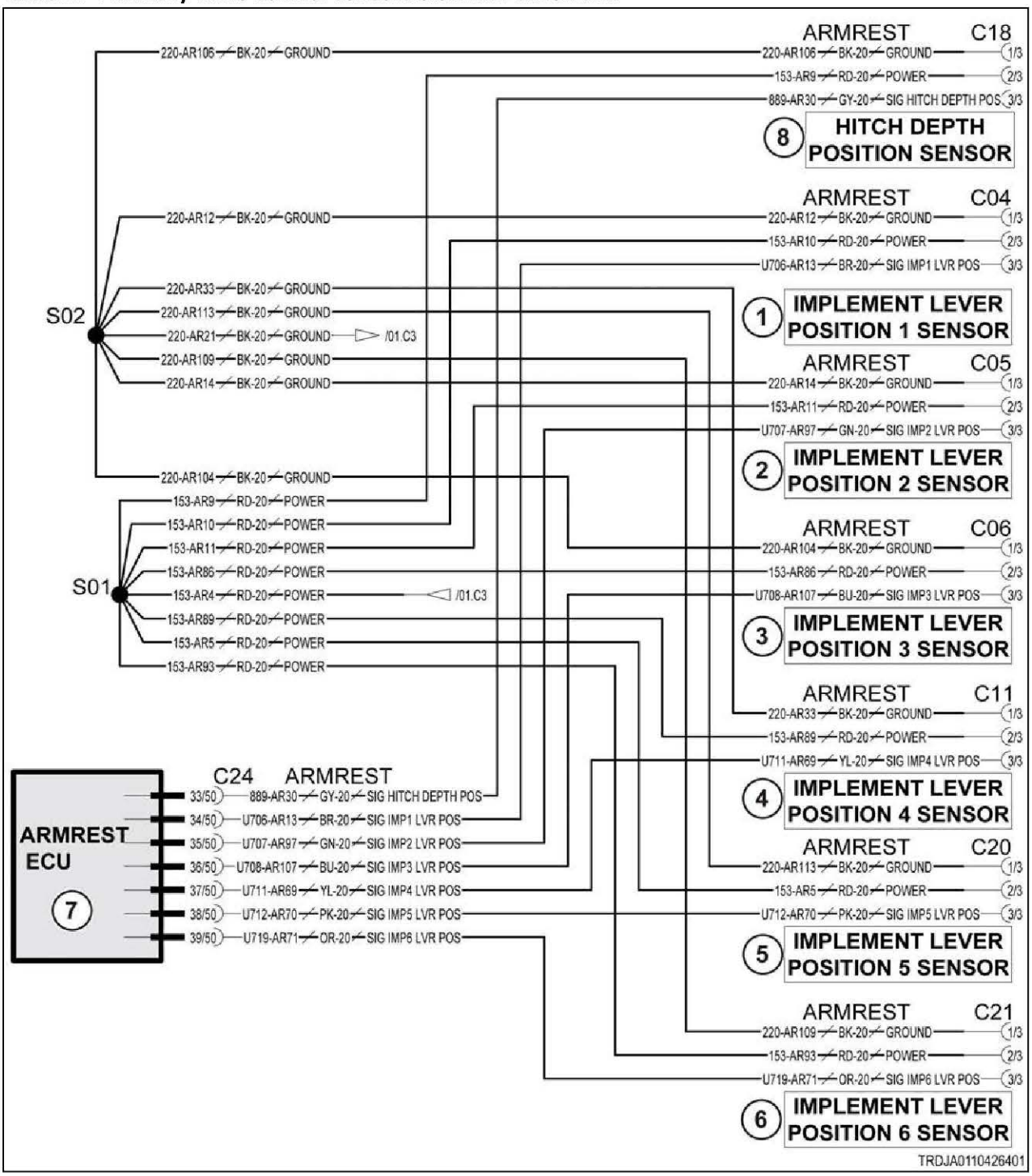

Fig. 356

Schematic legend		
Item	**Schematic term**	**Description**
1	IMPLEMENT LEVER POSITION 1 SENSOR	Implement lever 1 position sensor
2	IMPLEMENT LEVER POSITION 2 SENSOR	Implement lever 2 position sensor
3	IMPLEMENT LEVER POSITION 3 SENSOR	Implement lever 3 position sensor
4	IMPLEMENT LEVER POSITION 4 SENSOR	Implement lever 4 position sensor

Schematic legend		
Item	**Schematic term**	**Description**
5	IMPLEMENT LEVER POSITION 5 SENSOR	Implement lever 5 position sensor
6	IMPLEMENT LEVER POSITION 6 SENSOR	Implement lever 6 position sensor
7	ARMREST ECU	Armrest module
8	HITCH DEPTH POSITION SENSOR	Hitch depth position sensor
--	SIG HITCH DEPTH POS	Signal hitch depth position sensor
--	SIG IMP1 LVR POS	Signal implement lever 1 position sensor

10.7.34.2 Auxiliary valve control levers

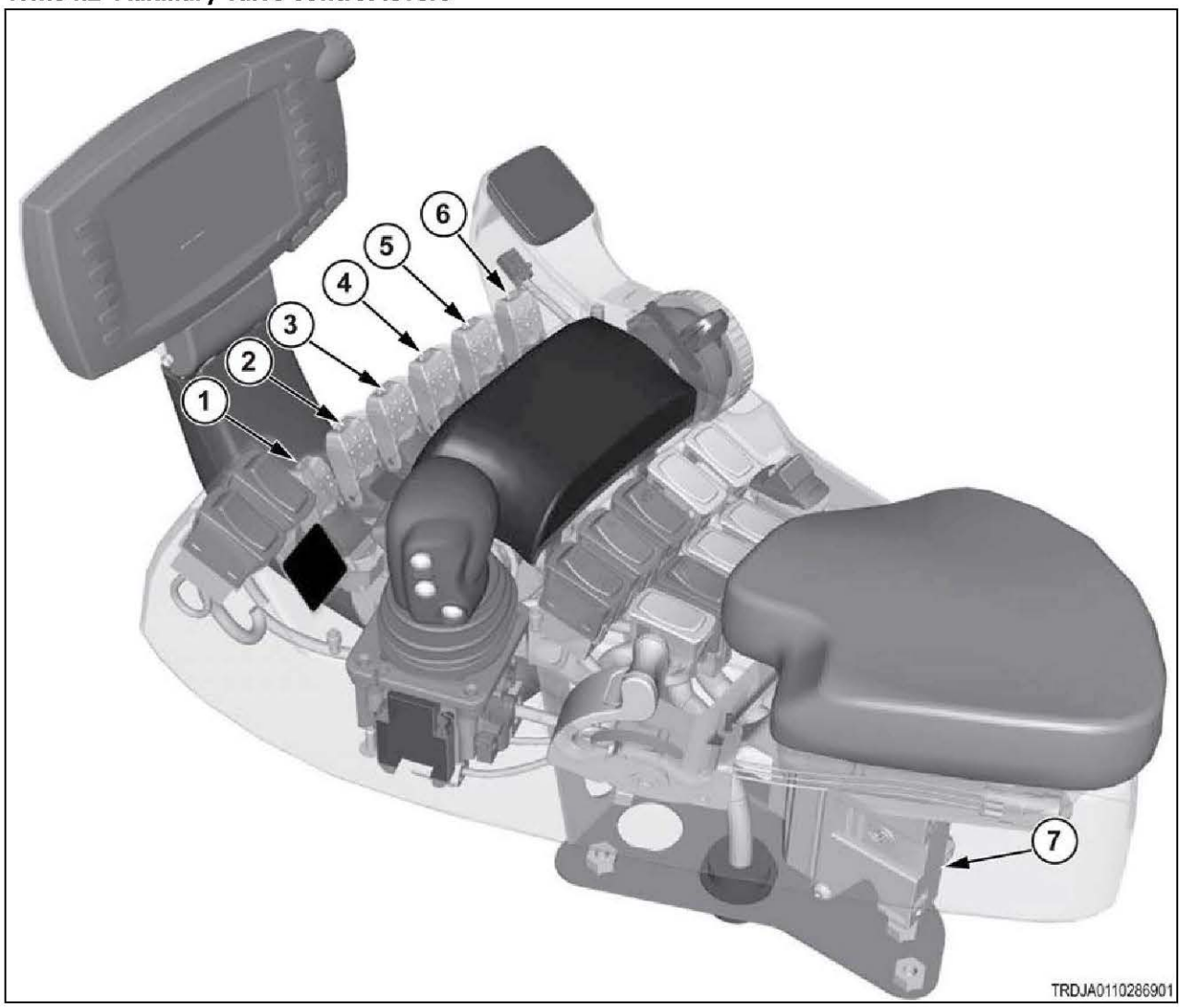

Fig. 357

(1)	Auxiliary valve 1 lever
(2)	Auxiliary valve 2 lever
(3)	Auxiliary valve 3 lever
(4)	Auxiliary valve 4 lever

(5)	Auxiliary valve 5 lever
(6)	Auxiliary valve 6 lever
(7)	Armrest module

10.7.35 Code SA 05 SPN 1943 FMI 00

The auxiliary valve lever 3 position sensor signal is above normal.

The valve lever position sensor is a semi-intelligent hall effect sensor that internally contains a hall effect position sensor to accurately detect the lever's angular position, and circuitry to translate the hall effect sinusoidal data into a linear 0.5 to 4.5 volt output signal to the armrest module.

This error is reported when the sensor data otherwise appears to be valid, but the data range exceeds 4.5 volts. The most likely cause is a faulty sensor.

Diagnosis and solution

1. Check the voltages at the sensor.

a) Open the armrest console to gain access to the sensor's harness connector.

b) Turn the key start switch to the on position, but do not start the engine.

c) Check the voltage between contacts 1 and 2 at the sensor connector.

The 12-volt fuse is known to be okay, because it also powers the armrest ECU itself, and this error could not be reported without power.

Result

- The voltage is not at or near 12 volts.

  Repair or replace the harness between the sensor and the armrest ECU.

  See step 2 to validate the repair.
- The voltage is at or near 12 volts.

  Continue.

d) Check the voltage between contacts 1 and 3 at the sensor connector while moving tthe lever through its full range of motion.

Result

The expected range is 0.5 to 4.5 volts.

- The voltage exceeds 4.5 volts.

  Replace the sensor.

  See step 2 to validate the repair.
- The voltage range is 0.5 to 4.5 volts.

  Inspect the sensor and ECU harness connectors for loose or corroded terminals

  See step 2 to check if the error persists.

2. Check if the diagnostic code remains.

a) Inspect and clean the harness connector contacts.

b) Connect all the connectors.

c) Turn the battery disconnect switch to the on position.

d) Turn the key start switch to the on position.

e) Operate the machine at low idle.

f) Check if the diagnostic code remains.

Result

- SPN 1943 FMI 00 is not active.

  Stop.
- SPN 1943 FMI 00 is active.

  Failure of the armrest module is possible but not common. Exit the procedure and do the procedure again. If the diagnostic code remains active, replace the module.

  Stop.

10.7.35.1 Auxiliary valve control sensors electrical schematic

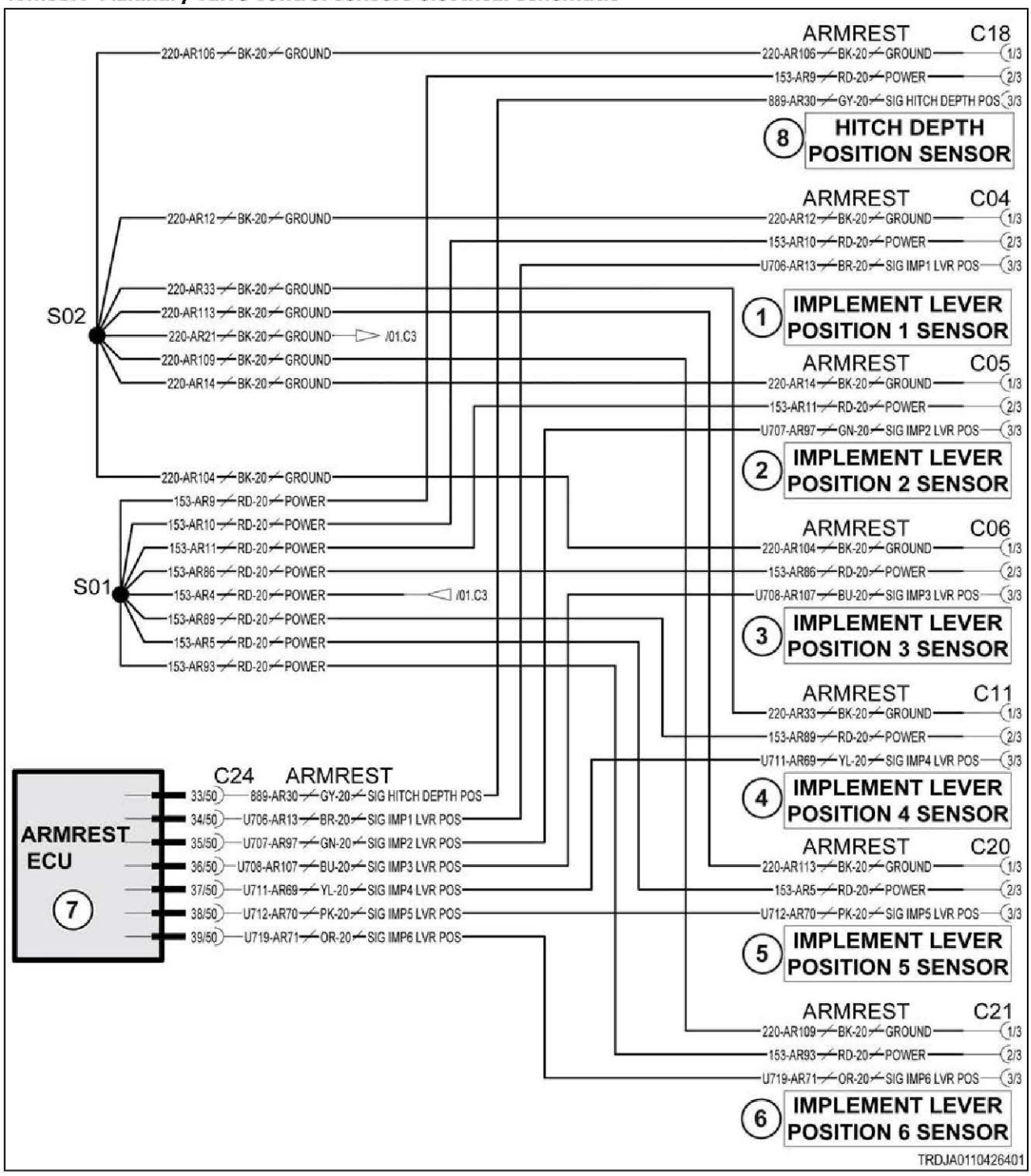

Fig. 358

Schematic legend		
Item	**Schematic term**	**Description**
1	IMPLEMENT LEVER POSITION 1 SENSOR	Implement lever 1 position sensor
2	IMPLEMENT LEVER POSITION 2 SENSOR	Implement lever 2 position sensor
3	IMPLEMENT LEVER POSITION 3 SENSOR	Implement lever 3 position sensor
4	IMPLEMENT LEVER POSITION 4 SENSOR	Implement lever 4 position sensor
5	IMPLEMENT LEVER POSITION 5 SENSOR	Implement lever 5 position sensor
6	IMPLEMENT LEVER POSITION 6 SENSOR	Implement lever 6 position sensor
7	ARMREST ECU	Armrest module
8	HITCH DEPTH POSITION SENSOR	Hitch depth position sensor
--	SIG HITCH DEPTH POS	Signal hitch depth position sensor
--	SIG IMP1 LVR POS	Signal implement lever 1 position sensor

10.7.35.2 Auxiliary valve control levers

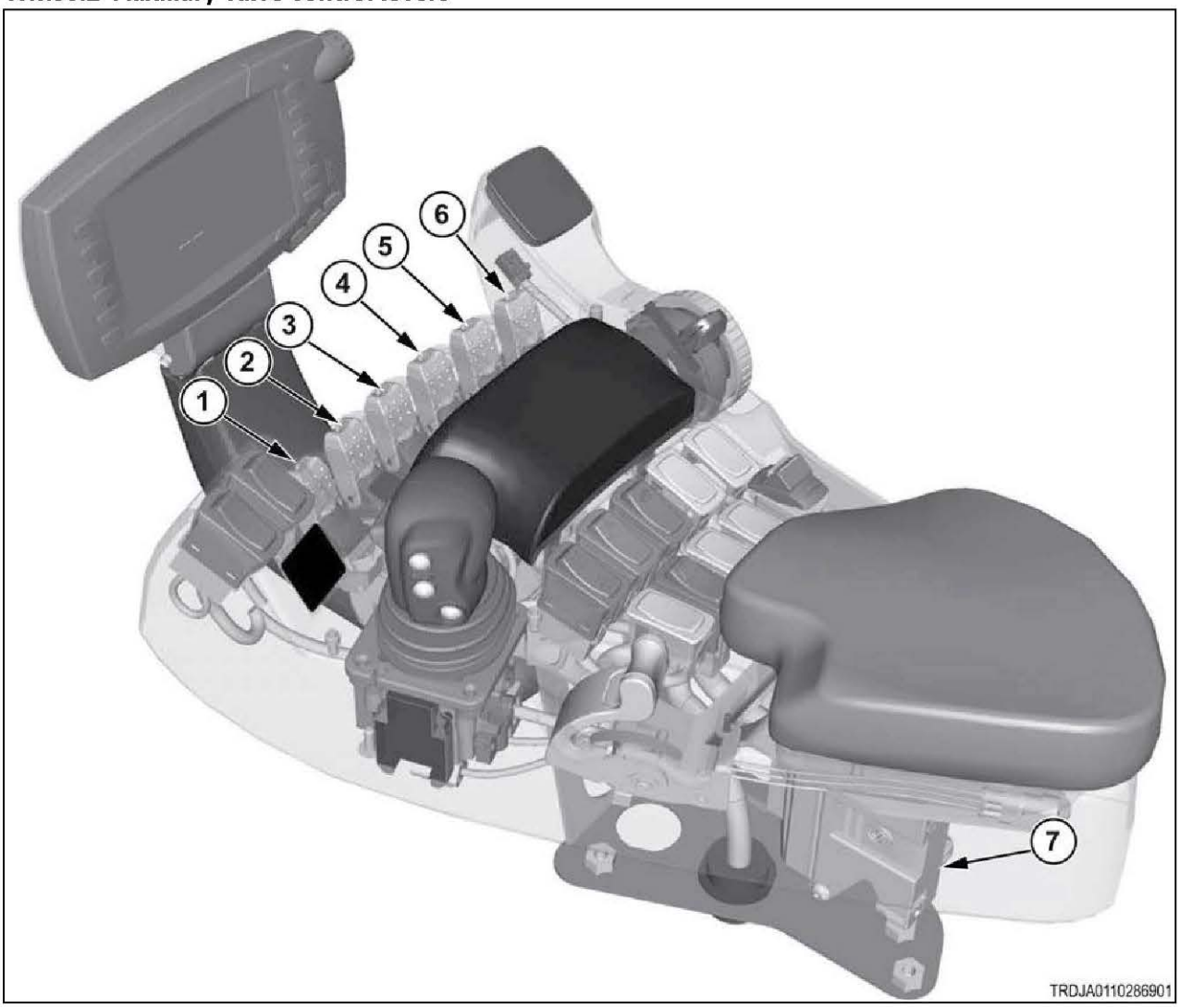

Fig. 359

(1)	Auxiliary valve 1 lever
(2)	Auxiliary valve 2 lever
(3)	Auxiliary valve 3 lever
(4)	Auxiliary valve 4 lever
(5)	Auxiliary valve 5 lever
(6)	Auxiliary valve 6 lever
(7)	Armrest module

10.7.36 Code SA 05 SPN 1943 FMI 01

The auxiliary valve lever 3 position sensor signal voltage is below normal.

The valve lever position sensor is a semi-intelligent hall effect sensor that internally contains a hall effect position sensor to accurately detect the lever's angular position, and circuitry to translate the hall effect sinusoidal data into a linear 0.5 to 4.5 volt output signal to the armrest module.

This error is reported when the sensor data otherwise appears to be valid, but the data range goes below 0.5 volts. The most likely cause is a faulty sensor.

Diagnosis and solution

1. Check the voltages at the sensor.

a) Open the armrest console to gain access to the sensor's harness connector.

b) Turn the key start switch to the on position, but do not start the engine.

c) Check the voltage between contacts 1 and 2 at the sensor connector.

The 12-volt fuse is known to be okay, because it also powers the armrest ECU itself, and this error could not be reported without power.

Result

- The voltage is not at or near 12 volts.

  Repair or replace the harness between the sensor and the armrest ECU.

  See step 2 to validate the repair.
- The voltage is at or near 12 volts.

  Continue.

d) Check the voltage between contacts 1 and 3 at the sensor connector while moving tthe lever through its full range of motion.

Result

The expected range is 0.5 to 4.5 volts.

- The voltage drops below 0.5 volts.

  Replace the sensor.

  See step 2 to validate the repair.
- The voltage range is 0.5 to 4.5 volts.

  Inspect the sensor and ECU harness connectors for loose or corroded terminals

  See step 2 to check if the error persists.

2. Check if the diagnostic code remains.

a) Inspect and clean the harness connector contacts.

b) Connect all the connectors.

c) Turn the battery disconnect switch to the on position.

d) Turn the key start switch to the on position.

e) Operate the machine at low idle.
f) Check if the diagnostic code remains.

Result

- SPN 1943 FMI 01 is not active.

  Stop.
- SPN 1943 FMI 01 is active.

  Failure of the armrest module is possible but not common. Exit the procedure and do the procedure again. If the diagnostic code remains active, replace the module.

  Stop.

10.7.36.1 Auxiliary valve control sensors electrical schematic

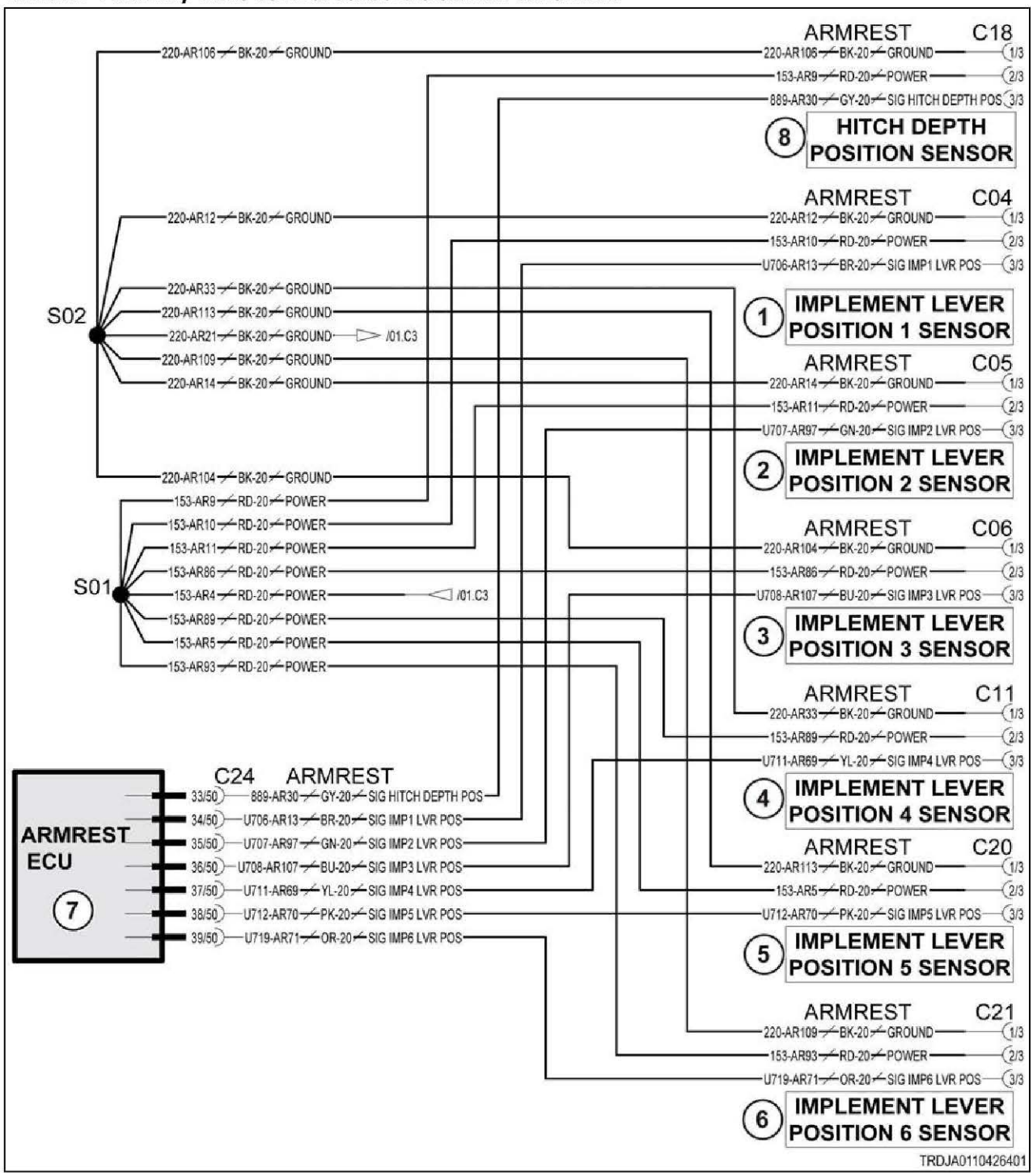

Fig. 360

Schematic legend		
Item	**Schematic term**	**Description**
1	IMPLEMENT LEVER POSITION 1 SENSOR	Implement lever 1 position sensor
2	IMPLEMENT LEVER POSITION 2 SENSOR	Implement lever 2 position sensor
3	IMPLEMENT LEVER POSITION 3 SENSOR	Implement lever 3 position sensor
4	IMPLEMENT LEVER POSITION 4 SENSOR	Implement lever 4 position sensor

Schematic legend		
Item	**Schematic term**	**Description**
5	IMPLEMENT LEVER POSITION 5 SENSOR	Implement lever 5 position sensor
6	IMPLEMENT LEVER POSITION 6 SENSOR	Implement lever 6 position sensor
7	ARMREST ECU	Armrest module
8	HITCH DEPTH POSITION SENSOR	Hitch depth position sensor
--	SIG HITCH DEPTH POS	Signal hitch depth position sensor
--	SIG IMP1 LVR POS	Signal implement lever 1 position sensor

10.7.36.2 Auxiliary valve control levers

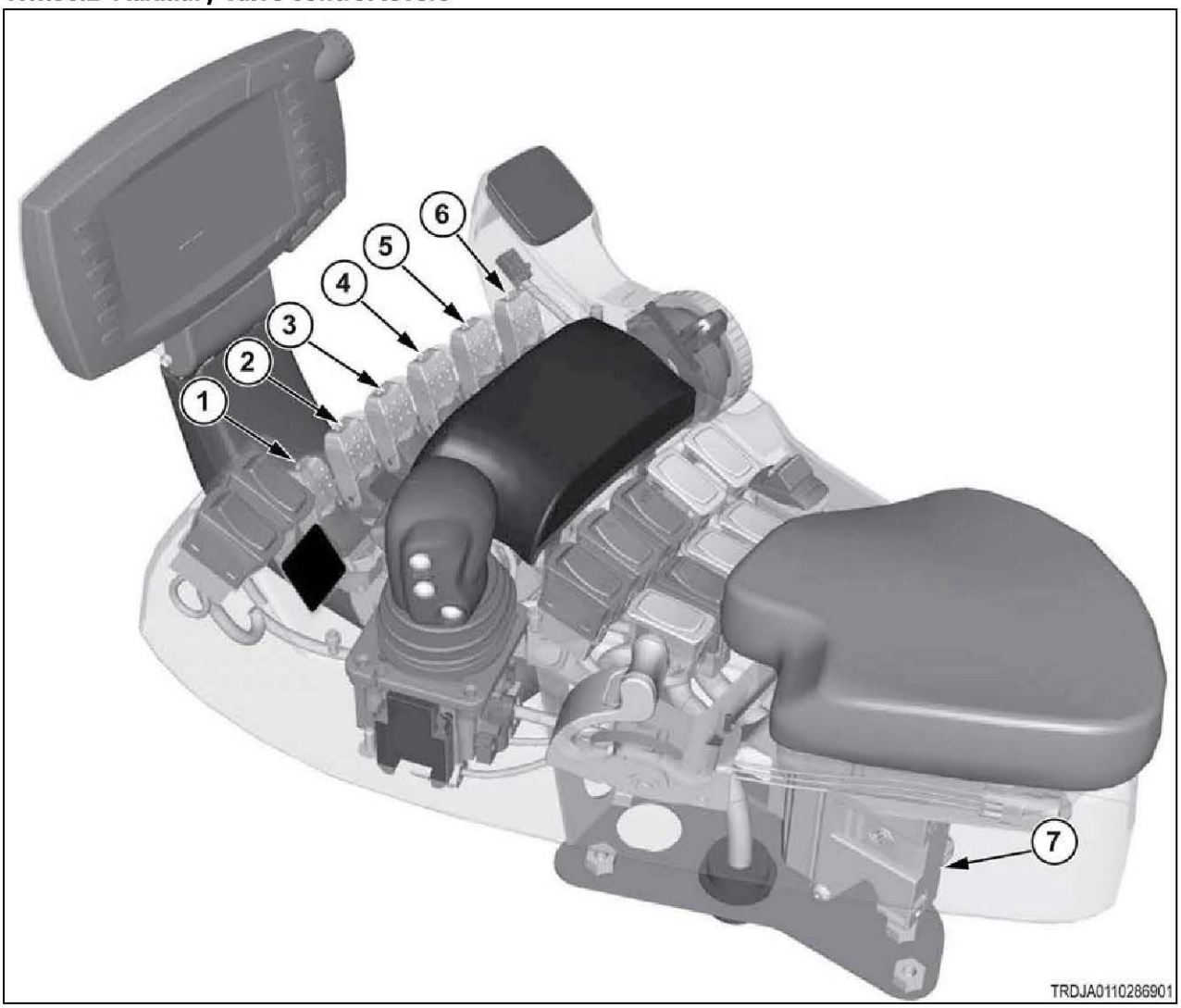

Fig. 361

(1)	Auxiliary valve 1 lever
(2)	Auxiliary valve 2 lever
(3)	Auxiliary valve 3 lever
(4)	Auxiliary valve 4 lever

(5)	Auxiliary valve 5 lever
(6)	Auxiliary valve 6 lever
(7)	Armrest module

10.7.37 Code SA 05 SPN 1943 FMI 03

The auxiliary valve lever 3 position sensor voltage is out of range - high.

The valve lever position sensor is a semi-intelligent hall effect sensor that internally contains a hall effect position sensor to accurately detect the lever's angular position, and circuitry to translate the hall effect sinusoidal data into a linear 0.5 to 4.5 volt output signal to the armrest module.

This error is reported when the sensor data is not valid and exceeds 4.5 volts. The most likely cause is a faulty sensor or short circuit to power.

Diagnosis and solution

1. Check the harness for short circuit.

a) Turn the start switch to the off position.
b) Turn the battery disconnect switch to the off position.
c) Disconnect the harness connector from the sensor.
d) Disconnect the harness connector from the armrest module.
e) Check the resistance from contact C24-36 to all other C24 contacts at the armrest connector.

Result

- One or more resistance measurement is at or near 0 ohms.

  Repair or replace the armrest harness.

  See step 3 to validate the repair.
- All resistance measurements were high (not near 0 ohms).

  See step 2 to check the sensor voltages.

2. Check the voltages at the sensor.

a) Reconnect the sensor and ECU.
b) Turn the key start switch to the on position, but do not start the engine.
c) Check the voltage between contacts 1 and 2 at the sensor connector.

The 12-volt fuse is known to be okay, because it also powers the armrest ECU itself, and this error could not be reported without power.

Result

- The voltage is not at or near 12 volts.

  Repair or replace the harness between the sensor and the armrest ECU.

  See step 3 to validate the repair.
- The voltage is at or near 12 volts.

  Continue.

d) Check the voltage between contacts 1 and 3 at the sensor connector while moving tthe lever through its full range of motion.

Result

The expected range is 0.5 to 4.5 volts.

- The voltage exceeds 4.5 volts.

  Replace the sensor.

  See step 2 to validate the repair.

- The voltage range is 0.5 to 4.5 volts.

  The armrest ECU is suspect.

  See step 3 to check if the error persists.

3. Check if the diagnostic code remains.

a) Inspect and clean the harness connector contacts.
b) Connect all the connectors.
c) Turn the battery disconnect switch to the on position.
d) Turn the key start switch to the on position.
e) Operate the machine at low idle.
f) Check if the diagnostic code remains.

Result

- SPN 1943 FMI 03 is not active.

  Stop.
- SPN 1943 FMI 03 is active.

  Failure of the armrest module is possible but not common. Exit the procedure and do the procedure again. If the diagnostic code remains active, replace the module.

  Stop.

10.7.37.1 Auxiliary valve control sensors electrical schematic

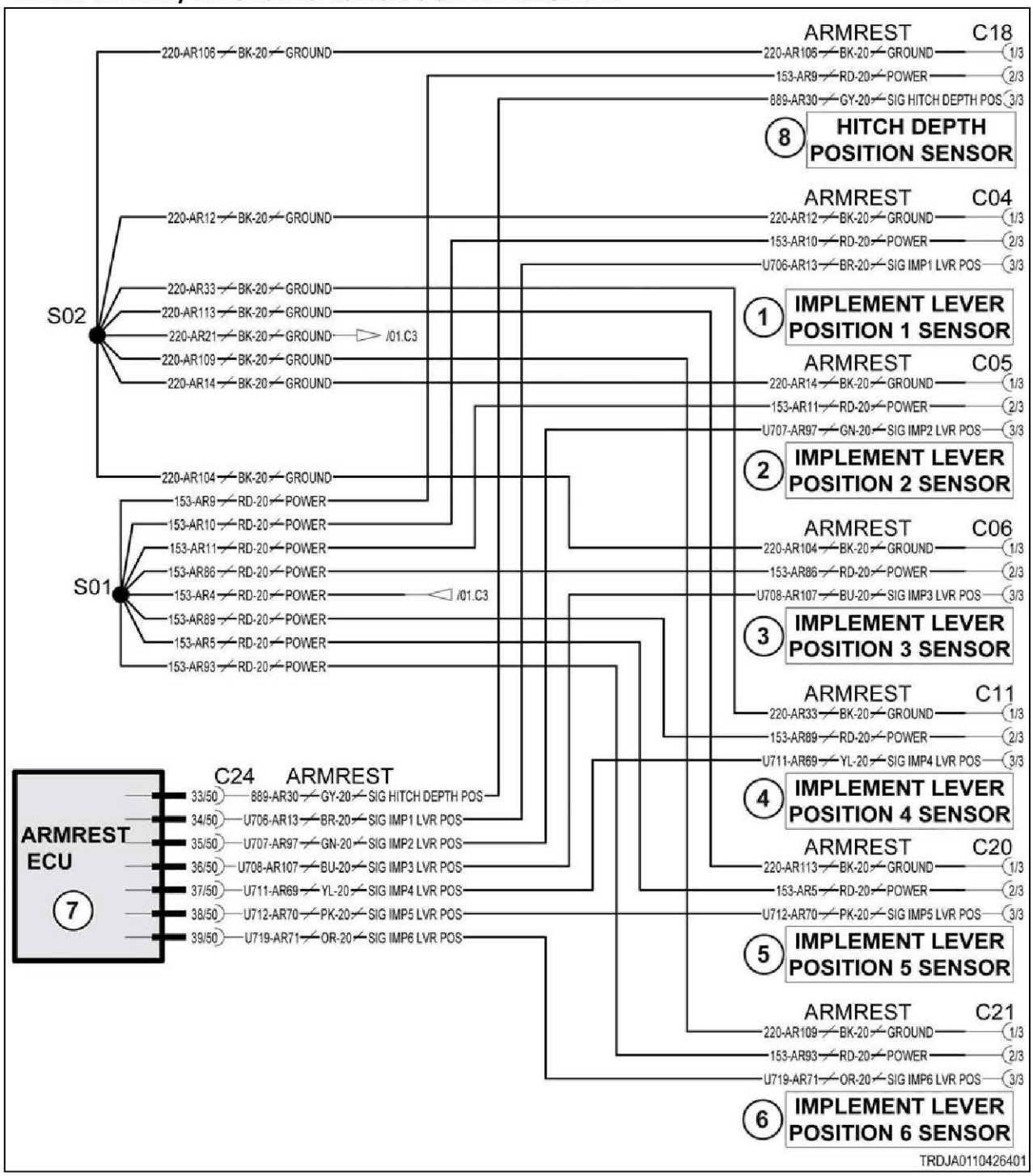

Fig. 362

Schematic legend		
Item	**Schematic term**	**Description**
1	IMPLEMENT LEVER POSITION 1 SENSOR	Implement lever 1 position sensor
2	IMPLEMENT LEVER POSITION 2 SENSOR	Implement lever 2 position sensor
3	IMPLEMENT LEVER POSITION 3 SENSOR	Implement lever 3 position sensor
4	IMPLEMENT LEVER POSITION 4 SENSOR	Implement lever 4 position sensor

Schematic legend		
Item	**Schematic term**	**Description**
5	IMPLEMENT LEVER POSITION 5 SENSOR	Implement lever 5 position sensor
6	IMPLEMENT LEVER POSITION 6 SENSOR	Implement lever 6 position sensor
7	ARMREST ECU	Armrest module
8	HITCH DEPTH POSITION SENSOR	Hitch depth position sensor
--	SIG HITCH DEPTH POS	Signal hitch depth position sensor
--	SIG IMP1 LVR POS	Signal implement lever 1 position sensor

10.7.37.2 Auxiliary valve control levers

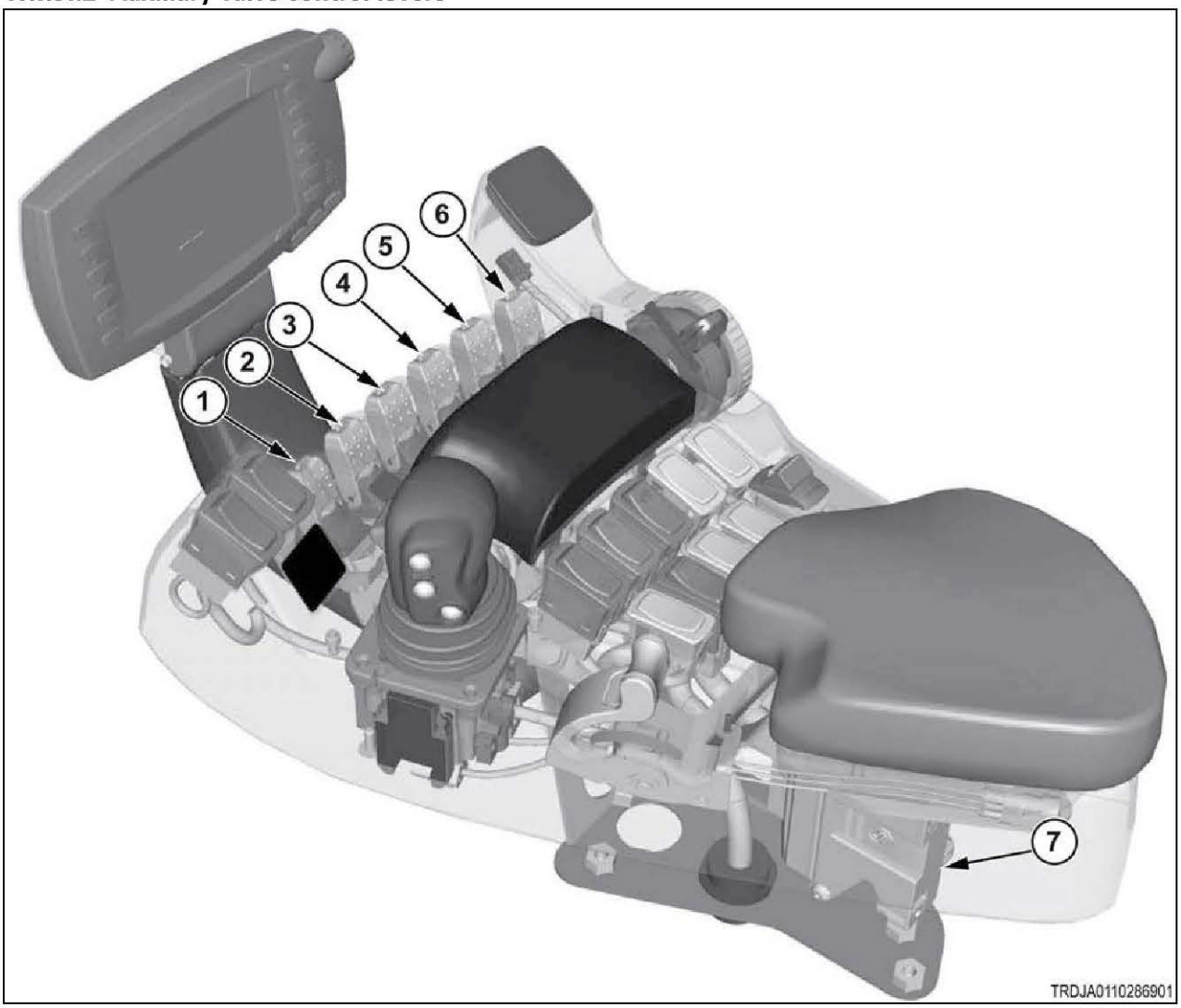

Fig. 363

(1)	Auxiliary valve 1 lever
(2)	Auxiliary valve 2 lever
(3)	Auxiliary valve 3 lever
(4)	Auxiliary valve 4 lever

(5)	Auxiliary valve 5 lever
(6)	Auxiliary valve 6 lever
(7)	Armrest module

10.7.38 Code SA 05 SPN 1943 FMI 04

The auxiliary valve lever 3 position sensor signal voltage is out of range - low.

The valve lever position sensor is a semi-intelligent hall effect sensor that internally contains a hall effect position sensor to accurately detect the lever's angular position, and circuitry to translate the hall effect sinusoidal data into a linear 0.5 to 4.5 volt output signal to the armrest module.

This error is reported when the sensor data is not valid and drops below 0.5 volts. The most likely cause is a faulty sensor or short circuit to ground.

Diagnosis and solution

1. Check the harness for short circuit.

a) Turn the start switch to the off position.
b) Turn the battery disconnect switch to the off position.
c) Disconnect the harness connector from the sensor.
d) Disconnect the harness connector from the armrest module.
e) Check the resistance from contact C24-36 to all other C24 contacts at the armrest connector.

Result

- One or more resistance measurement is at or near 0 ohms.

  Repair or replace the armrest harness.

  See step 3 to validate the repair.
- All resistance measurements were high (not near 0 ohms).

  See step 2 to check the sensor voltages.

2. Check the voltages at the sensor.

a) Reconnect the sensor and ECU.
b) Turn the key start switch to the on position, but do not start the engine.
c) Check the voltage between contacts 1 and 2 at the sensor connector.

The 12-volt fuse is known to be okay, because it also powers the armrest ECU itself, and this error could not be reported without power.

Result

- The voltage is not at or near 12 volts.

  Repair or replace the harness between the sensor and the armrest ECU.

  See step 3 to validate the repair.
- The voltage is at or near 12 volts.

  Continue.

d) Check the voltage between contacts 1 and 3 at the sensor connector while moving tthe lever through its full range of motion.

Result

The expected range is 0.5 to 4.5 volts.

- The voltage drops below 0.5 volts.

  Replace the sensor.

  See step 2 to validate the repair.

- The voltage range is 0.5 to 4.5 volts.

  The armrest ECU is suspect.

  See step 3 to check if the error persists.

3. Check if the diagnostic code remains.

a) Inspect and clean the harness connector contacts.
b) Connect all the connectors.
c) Turn the battery disconnect switch to the on position.
d) Turn the key start switch to the on position.
e) Operate the machine at low idle.
f) Check if the diagnostic code remains.

Result

- SPN 1943 FMI 04 is not active.

  Stop.
- SPN 1943 FMI 04 is active.

  Failure of the armrest module is possible but not common. Exit the procedure and do the procedure again. If the diagnostic code remains active, replace the module.

  Stop.

10.7.38.1 Auxiliary valve control sensors electrical schematic

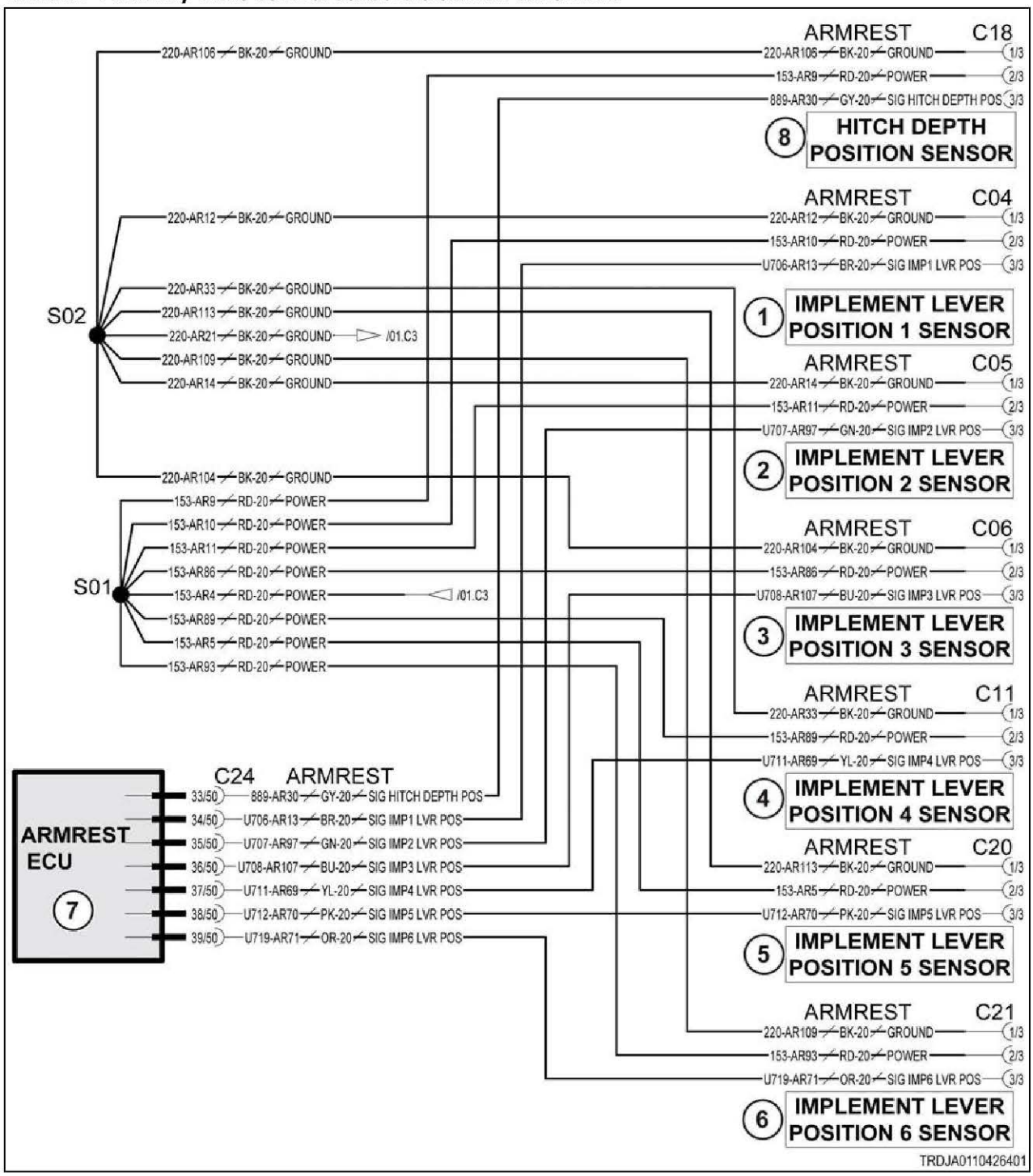

Fig. 364

Schematic legend		
Item	**Schematic term**	**Description**
1	IMPLEMENT LEVER POSITION 1 SENSOR	Implement lever 1 position sensor
2	IMPLEMENT LEVER POSITION 2 SENSOR	Implement lever 2 position sensor
3	IMPLEMENT LEVER POSITION 3 SENSOR	Implement lever 3 position sensor
4	IMPLEMENT LEVER POSITION 4 SENSOR	Implement lever 4 position sensor

Schematic legend		
Item	**Schematic term**	**Description**
5	IMPLEMENT LEVER POSITION 5 SENSOR	Implement lever 5 position sensor
6	IMPLEMENT LEVER POSITION 6 SENSOR	Implement lever 6 position sensor
7	ARMREST ECU	Armrest module
8	HITCH DEPTH POSITION SENSOR	Hitch depth position sensor
--	SIG HITCH DEPTH POS	Signal hitch depth position sensor
--	SIG IMP1 LVR POS	Signal implement lever 1 position sensor

10.7.38.2 Auxiliary valve control levers

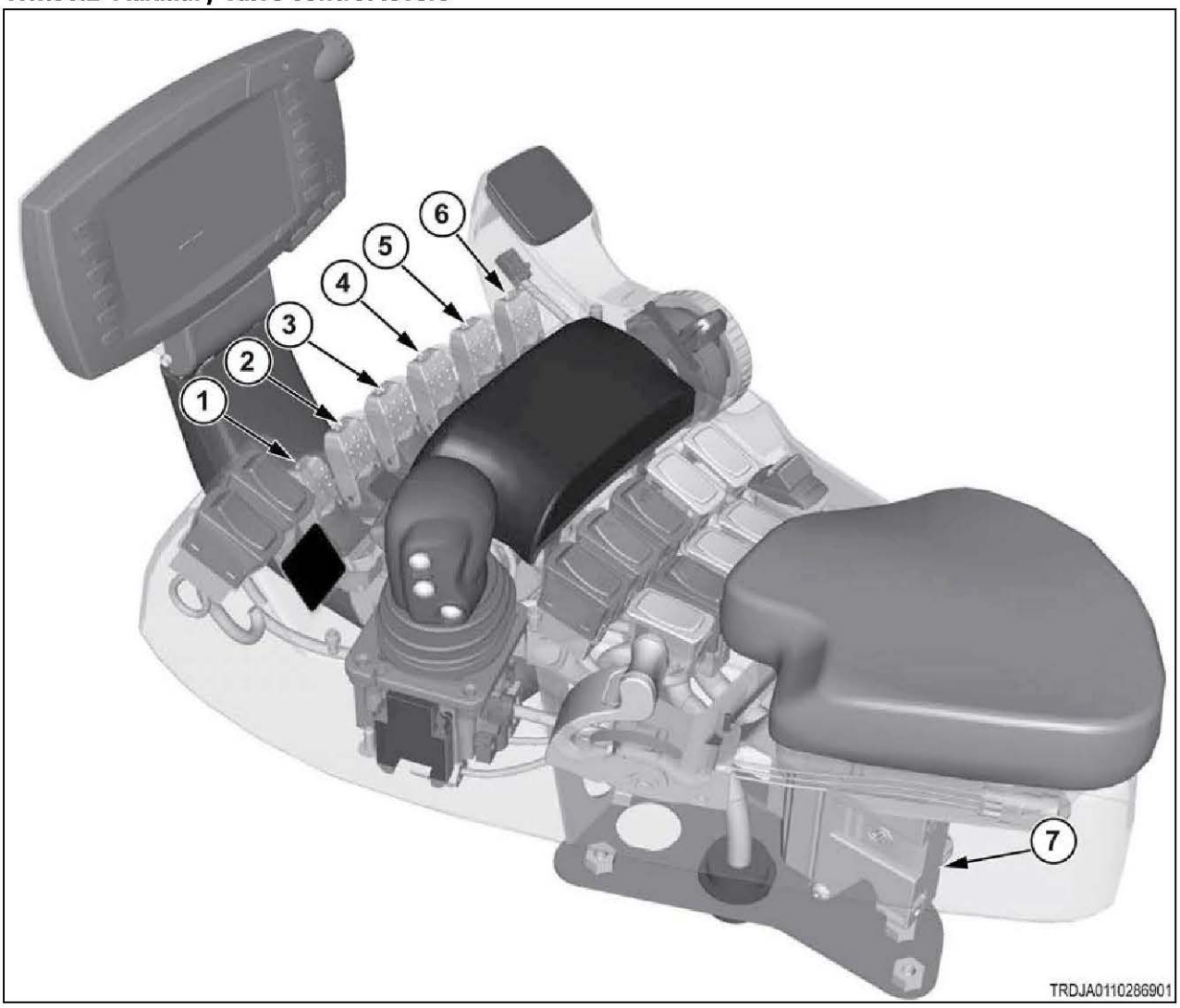

Fig. 365

(1)	Auxiliary valve 1 lever
(2)	Auxiliary valve 2 lever
(3)	Auxiliary valve 3 lever
(4)	Auxiliary valve 4 lever

(5)	Auxiliary valve 5 lever
(6)	Auxiliary valve 6 lever
(7)	Armrest module

10.7.39 Code SA 05 SPN 1955 FMI 00

The auxiliary valve lever 4 position sensor signal is above normal.

The valve lever position sensor is a semi-intelligent hall effect sensor that internally contains a hall effect position sensor to accurately detect the lever's angular position, and circuitry to translate the hall effect sinusoidal data into a linear 0.5 to 4.5 volt output signal to the armrest module.

This error is reported when the sensor data otherwise appears to be valid, but the data range exceeds 4.5 volts. The most likely cause is a faulty sensor.

Diagnosis and solution

1. Check the voltages at the sensor.

a) Open the armrest console to gain access to the sensor's harness connector.

b) Turn the key start switch to the on position, but do not start the engine.

c) Check the voltage between contacts 1 and 2 at the sensor connector.

The 12-volt fuse is known to be okay, because it also powers the armrest ECU itself, and this error could not be reported without power.

Result

- The voltage is not at or near 12 volts.

  Repair or replace the harness between the sensor and the armrest ECU.

  See step 2 to validate the repair.
- The voltage is at or near 12 volts.

  Continue.

d) Check the voltage between contacts 1 and 3 at the sensor connector while moving tthe lever through its full range of motion.

Result

The expected range is 0.5 to 4.5 volts.

- The voltage exceeds 4.5 volts.

  Replace the sensor.

  See step 2 to validate the repair.
- The voltage range is 0.5 to 4.5 volts.

  Inspect the sensor and ECU harness connectors for loose or corroded terminals

  See step 2 to check if the error persists.

2. Check if the diagnostic code remains.

a) Inspect and clean the harness connector contacts.

b) Connect all the connectors.

c) Turn the battery disconnect switch to the on position.

d) Turn the key start switch to the on position.

e) Operate the machine at low idle.

f) Check if the diagnostic code remains.

Result

- SPN 1955 FMI 00 is not active.

  Stop.
- SPN 1955 FMI 00 is active.

  Failure of the armrest module is possible but not common. Exit the procedure and do the procedure again. If the diagnostic code remains active, replace the module.

  Stop.

10.7.39.1 Auxiliary valve control sensors electrical schematic

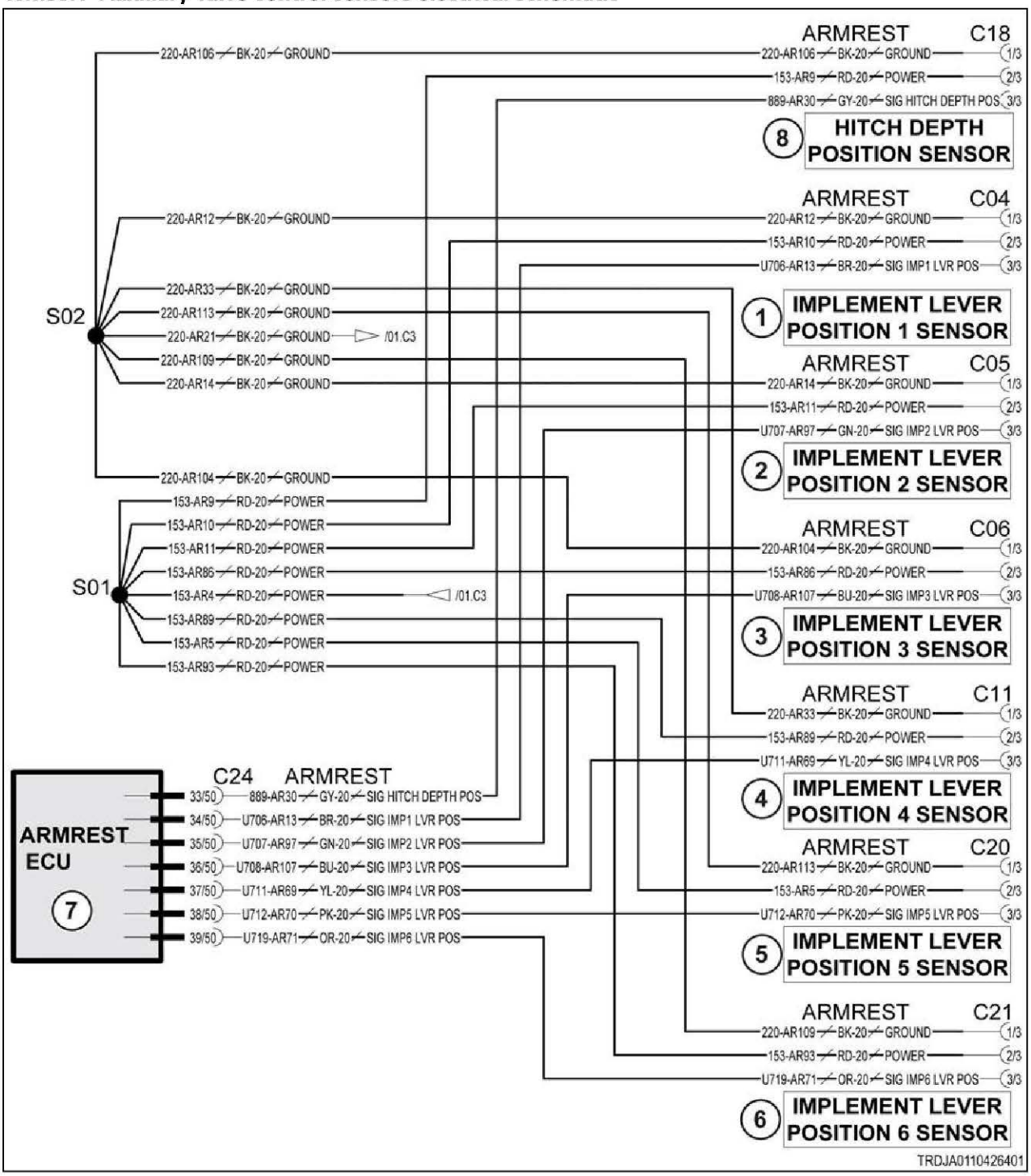

Fig. 366

Schematic legend		
Item	**Schematic term**	**Description**
1	IMPLEMENT LEVER POSITION 1 SENSOR	Implement lever 1 position sensor
2	IMPLEMENT LEVER POSITION 2 SENSOR	Implement lever 2 position sensor
3	IMPLEMENT LEVER POSITION 3 SENSOR	Implement lever 3 position sensor
4	IMPLEMENT LEVER POSITION 4 SENSOR	Implement lever 4 position sensor
5	IMPLEMENT LEVER POSITION 5 SENSOR	Implement lever 5 position sensor
6	IMPLEMENT LEVER POSITION 6 SENSOR	Implement lever 6 position sensor
7	ARMREST ECU	Armrest module
8	HITCH DEPTH POSITION SENSOR	Hitch depth position sensor
--	SIG HITCH DEPTH POS	Signal hitch depth position sensor
--	SIG IMP1 LVR POS	Signal implement lever 1 position sensor

10.7.39.2 Auxiliary valve control levers

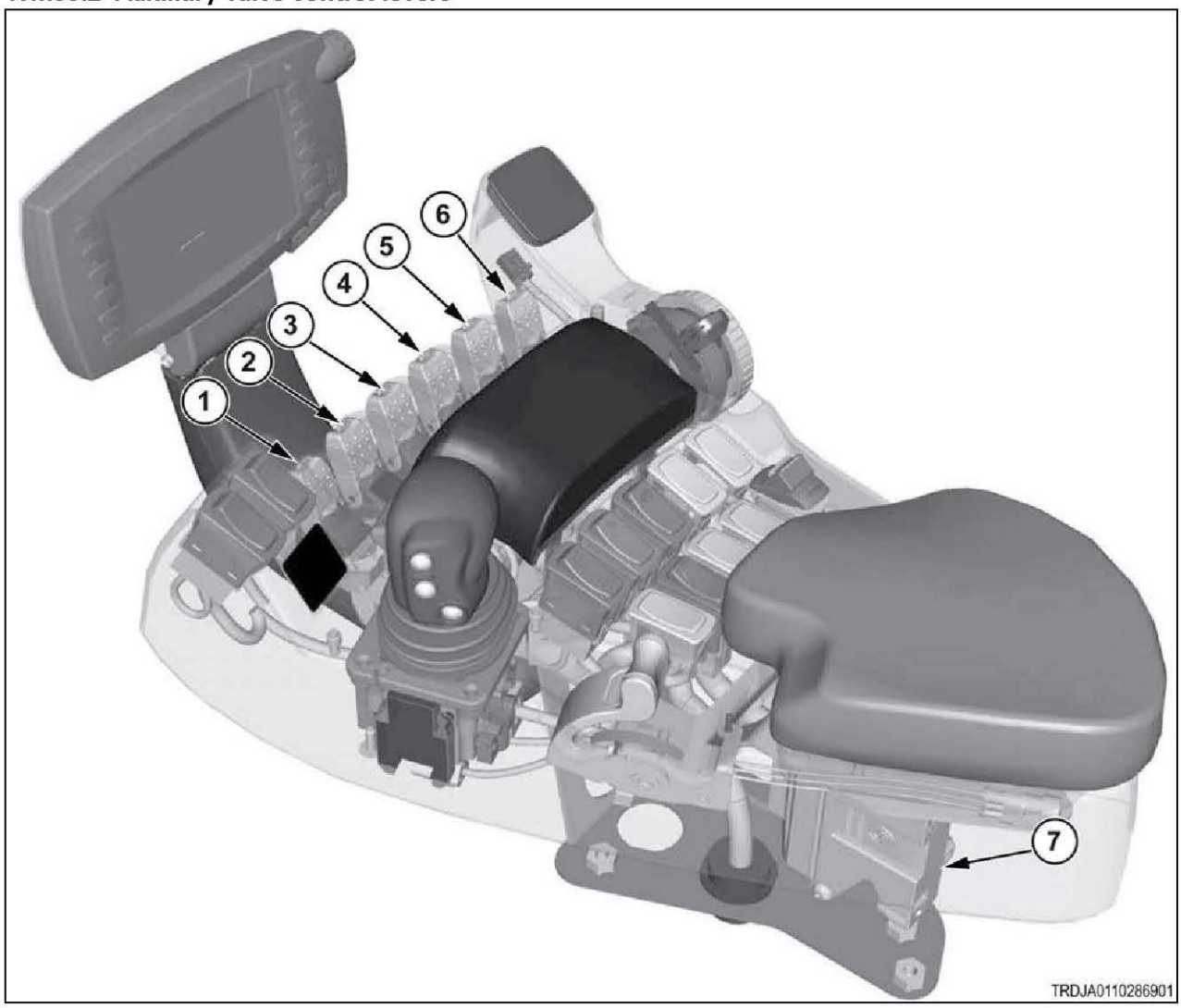

Fig. 367

(1)	Auxiliary valve 1 lever
(2)	Auxiliary valve 2 lever
(3)	Auxiliary valve 3 lever
(4)	Auxiliary valve 4 lever
(5)	Auxiliary valve 5 lever
(6)	Auxiliary valve 6 lever
(7)	Armrest module

10.7.40 Code SA 05 SPN 1955 FMI 01

The auxiliary valve lever 4 position sensor signal voltage is below normal.

The valve lever position sensor is a semi-intelligent hall effect sensor that internally contains a hall effect position sensor to accurately detect the lever's angular position, and circuitry to translate the hall effect sinusoidal data into a linear 0.5 to 4.5 volt output signal to the armrest module.

This error is reported when the sensor data otherwise appears to be valid, but the data range goes below 0.5 volts. The most likely cause is a faulty sensor.

Diagnosis and solution

1. Check the voltages at the sensor.

a) Open the armrest console to gain access to the sensor's harness connector.

b) Turn the key start switch to the on position, but do not start the engine.

c) Check the voltage between contacts 1 and 2 at the sensor connector.

The 12-volt fuse is known to be okay, because it also powers the armrest ECU itself, and this error could not be reported without power.

Result

- The voltage is not at or near 12 volts.

  Repair or replace the harness between the sensor and the armrest ECU.

  See step 2 to validate the repair.
- The voltage is at or near 12 volts.

  Continue.

d) Check the voltage between contacts 1 and 3 at the sensor connector while moving tthe lever through its full range of motion.

Result

The expected range is 0.5 to 4.5 volts.

- The voltage drops below 0.5 volts.

  Replace the sensor.

  See step 2 to validate the repair.
- The voltage range is 0.5 to 4.5 volts.

  Inspect the sensor and ECU harness connectors for loose or corroded terminals

  See step 2 to check if the error persists.

2. Check if the diagnostic code remains.

a) Inspect and clean the harness connector contacts.

b) Connect all the connectors.

c) Turn the battery disconnect switch to the on position.

d) Turn the key start switch to the on position.

e) Operate the machine at low idle.
f) Check if the diagnostic code remains.

Result

- SPN 1955 FMI 01 is not active.

  Stop.
- SPN 1955 FMI 01 is active.

  Failure of the armrest module is possible but not common. Exit the procedure and do the procedure again. If the diagnostic code remains active, replace the module.

  Stop.

10.7.40.1 Auxiliary valve control sensors electrical schematic

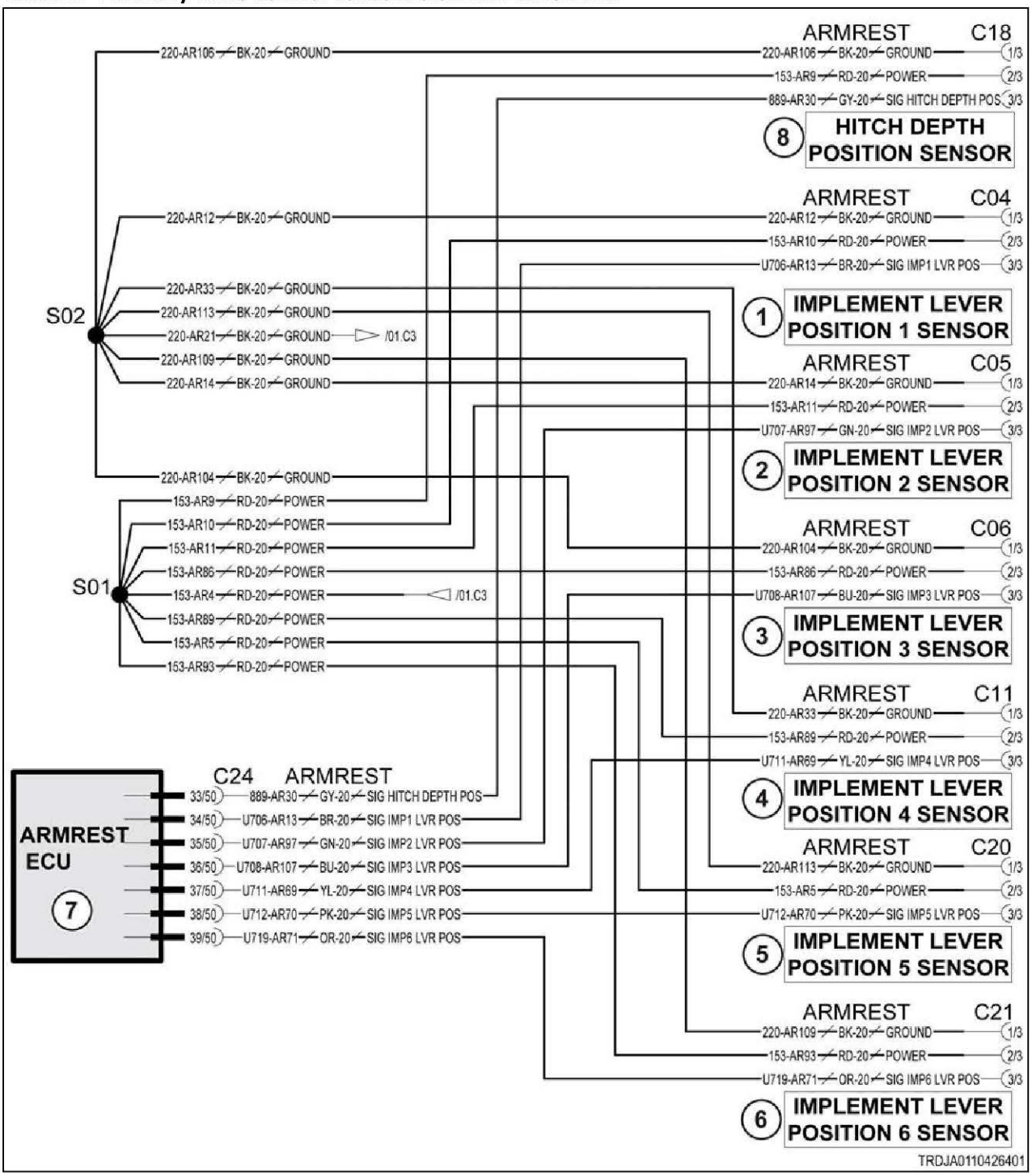

Fig. 368

Schematic legend		
Item	**Schematic term**	**Description**
1	IMPLEMENT LEVER POSITION 1 SENSOR	Implement lever 1 position sensor
2	IMPLEMENT LEVER POSITION 2 SENSOR	Implement lever 2 position sensor
3	IMPLEMENT LEVER POSITION 3 SENSOR	Implement lever 3 position sensor
4	IMPLEMENT LEVER POSITION 4 SENSOR	Implement lever 4 position sensor

Schematic legend		
Item	**Schematic term**	**Description**
5	IMPLEMENT LEVER POSITION 5 SENSOR	Implement lever 5 position sensor
6	IMPLEMENT LEVER POSITION 6 SENSOR	Implement lever 6 position sensor
7	ARMREST ECU	Armrest module
8	HITCH DEPTH POSITION SENSOR	Hitch depth position sensor
--	SIG HITCH DEPTH POS	Signal hitch depth position sensor
--	SIG IMP1 LVR POS	Signal implement lever 1 position sensor

10.7.40.2 Auxiliary valve control levers

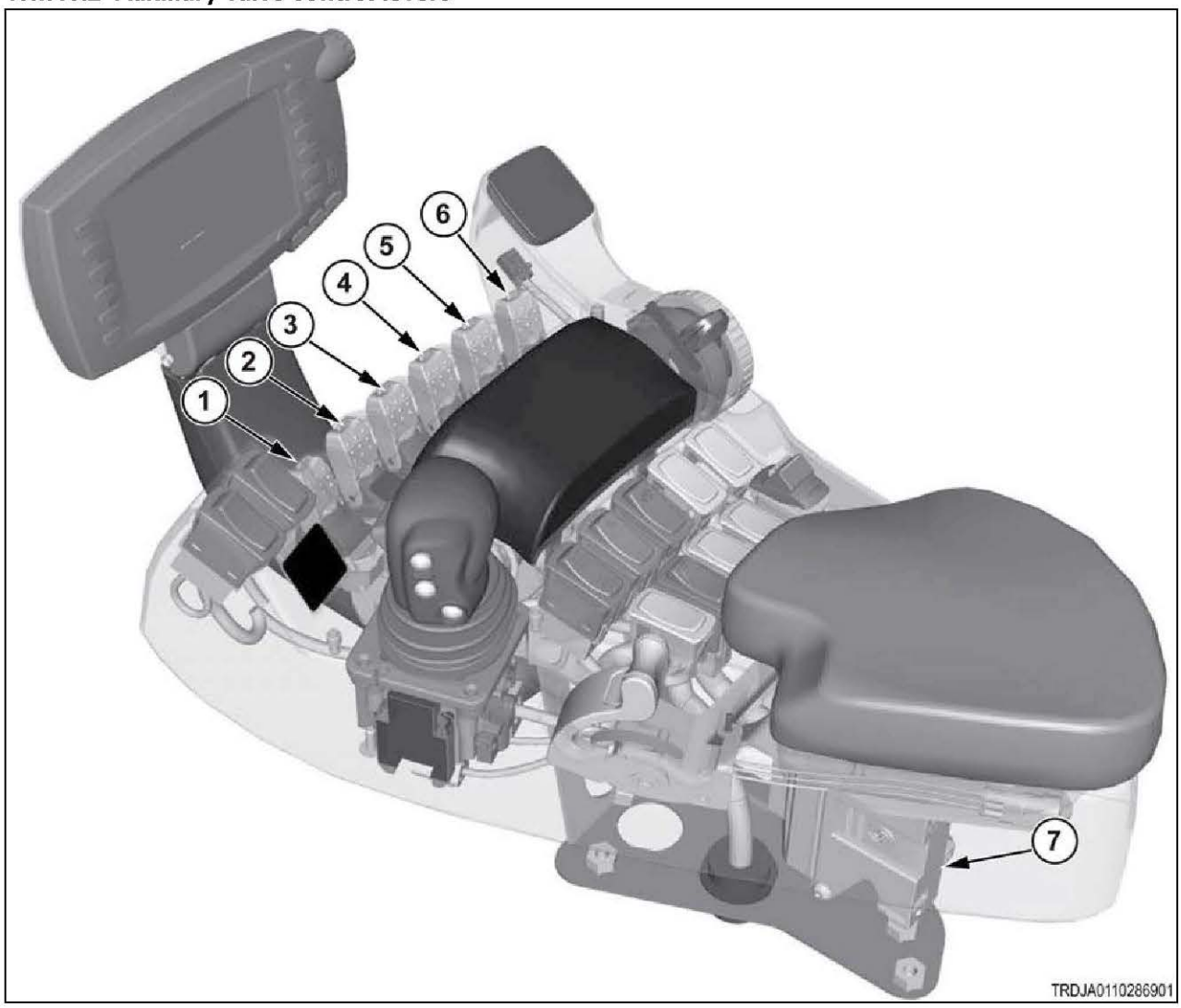

Fig. 369

(1)	Auxiliary valve 1 lever
(2)	Auxiliary valve 2 lever
(3)	Auxiliary valve 3 lever
(4)	Auxiliary valve 4 lever

(5)	Auxiliary valve 5 lever
(6)	Auxiliary valve 6 lever
(7)	Armrest module

10.7.41 Code SA 05 SPN 1955 FMI 03

The auxiliary valve lever 4 position sensor voltage is out of range - high.

The valve lever position sensor is a semi-intelligent hall effect sensor that internally contains a hall effect position sensor to accurately detect the lever's angular position, and circuitry to translate the hall effect sinusoidal data into a linear 0.5 to 4.5 volt output signal to the armrest module.

This error is reported when the sensor data is not valid and exceeds 4.5 volts. The most likely cause is a faulty sensor or short circuit to power.

Diagnosis and solution

1. Check the harness for short circuit.

a) Turn the start switch to the off position.
b) Turn the battery disconnect switch to the off position.
c) Disconnect the harness connector from the sensor.
d) Disconnect the harness connector from the armrest module.
e) Check the resistance from contact C24-37 to all other C24 contacts at the armrest connector.

Result

- One or more resistance measurement is at or near 0 ohms.

  Repair or replace the armrest harness.

  See step 3 to validate the repair.
- All resistance measurements were high (not near 0 ohms).

  See step 2 to check the sensor voltages.

2. Check the voltages at the sensor.

a) Reconnect the sensor and ECU.
b) Turn the key start switch to the on position, but do not start the engine.
c) Check the voltage between contacts 1 and 2 at the sensor connector.

The 12-volt fuse is known to be okay, because it also powers the armrest ECU itself, and this error could not be reported without power.

Result

- The voltage is not at or near 12 volts.

  Repair or replace the harness between the sensor and the armrest ECU.

  See step 3 to validate the repair.
- The voltage is at or near 12 volts.

  Continue.

d) Check the voltage between contacts 1 and 3 at the sensor connector while moving tthe lever through its full range of motion.

Result

The expected range is 0.5 to 4.5 volts.

- The voltage exceeds 4.5 volts.

  Replace the sensor.

  See step 2 to validate the repair.

- The voltage range is 0.5 to 4.5 volts.

  The armrest ECU is suspect.

  See step 3 to check if the error persists.

3. Check if the diagnostic code remains.

a) Inspect and clean the harness connector contacts.
b) Connect all the connectors.
c) Turn the battery disconnect switch to the on position.
d) Turn the key start switch to the on position.
e) Operate the machine at low idle.
f) Check if the diagnostic code remains.

Result

- SPN 1955 FMI 03 is not active.

  Stop.
- SPN 1955 FMI 03 is active.

  Failure of the armrest module is possible but not common. Exit the procedure and do the procedure again. If the diagnostic code remains active, replace the module.

  Stop.

10.7.41.1 Auxiliary valve control sensors electrical schematic

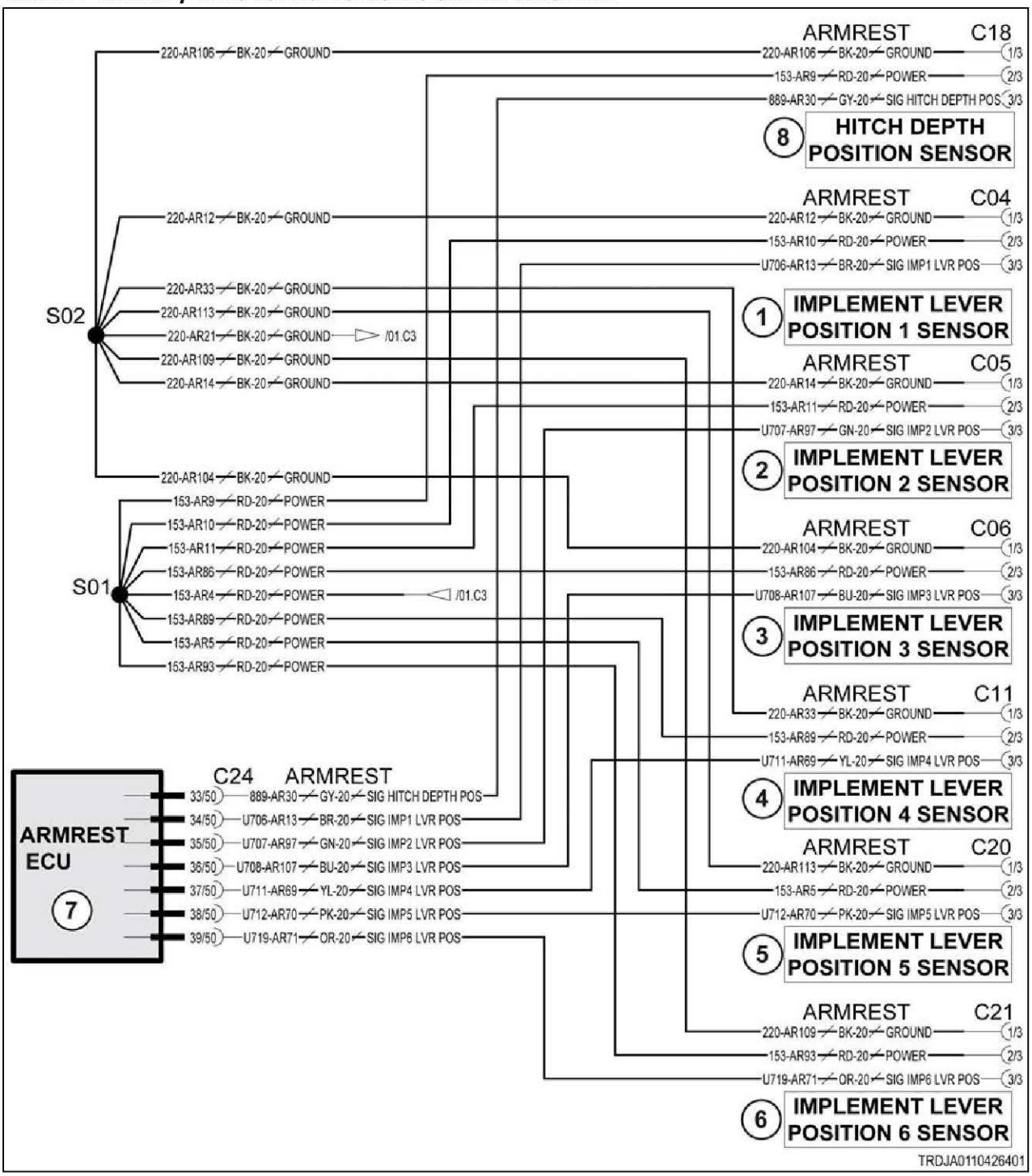

Fig. 370

Schematic legend		
Item	**Schematic term**	**Description**
1	IMPLEMENT LEVER POSITION 1 SENSOR	Implement lever 1 position sensor
2	IMPLEMENT LEVER POSITION 2 SENSOR	Implement lever 2 position sensor
3	IMPLEMENT LEVER POSITION 3 SENSOR	Implement lever 3 position sensor
4	IMPLEMENT LEVER POSITION 4 SENSOR	Implement lever 4 position sensor

Schematic legend		
Item	**Schematic term**	**Description**
5	IMPLEMENT LEVER POSITION 5 SENSOR	Implement lever 5 position sensor
6	IMPLEMENT LEVER POSITION 6 SENSOR	Implement lever 6 position sensor
7	ARMREST ECU	Armrest module
8	HITCH DEPTH POSITION SENSOR	Hitch depth position sensor
--	SIG HITCH DEPTH POS	Signal hitch depth position sensor
--	SIG IMP1 LVR POS	Signal implement lever 1 position sensor

10.7.41.2 Auxiliary valve control levers

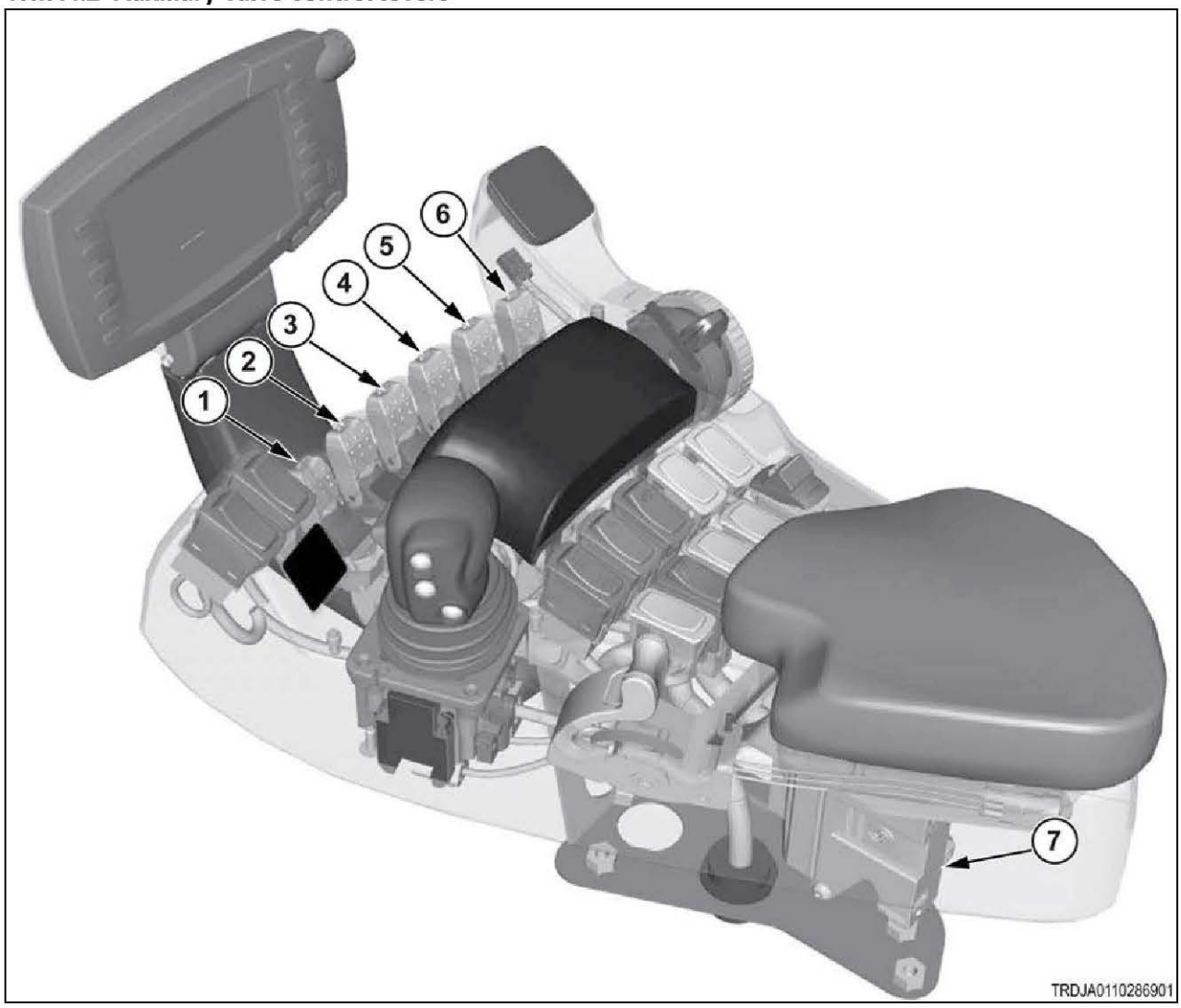

Fig. 371

(1)	Auxiliary valve 1 lever
(2)	Auxiliary valve 2 lever
(3)	Auxiliary valve 3 lever
(4)	Auxiliary valve 4 lever

(5)	Auxiliary valve 5 lever
(6)	Auxiliary valve 6 lever
(7)	Armrest module

10.7.42 Code SA 05 SPN 1955 FMI 04

The auxiliary valve lever 4 position sensor signal voltage is out of range - low.

The valve lever position sensor is a semi-intelligent hall effect sensor that internally contains a hall effect position sensor to accurately detect the lever's angular position, and circuitry to translate the hall effect sinusoidal data into a linear 0.5 to 4.5 volt output signal to the armrest module.

This error is reported when the sensor data is not valid and drops below 0.5 volts. The most likely cause is a faulty sensor or short circuit to ground.

Diagnosis and solution

1. Check the harness for short circuit.

a) Turn the start switch to the off position.
b) Turn the battery disconnect switch to the off position.
c) Disconnect the harness connector from the sensor.
d) Disconnect the harness connector from the armrest module.
e) Check the resistance from contact C24-37 to all other C24 contacts at the armrest connector.

Result

- One or more resistance measurement is at or near 0 ohms.

  Repair or replace the armrest harness.

  See step 3 to validate the repair.
- All resistance measurements were high (not near 0 ohms).

  See step 2 to check the sensor voltages.

2. Check the voltages at the sensor.

a) Reconnect the sensor and ECU.
b) Turn the key start switch to the on position, but do not start the engine.
c) Check the voltage between contacts 1 and 2 at the sensor connector.

The 12-volt fuse is known to be okay, because it also powers the armrest ECU itself, and this error could not be reported without power.

Result

- The voltage is not at or near 12 volts.

  Repair or replace the harness between the sensor and the armrest ECU.

  See step 3 to validate the repair.
- The voltage is at or near 12 volts.

  Continue.

d) Check the voltage between contacts 1 and 3 at the sensor connector while moving tthe lever through its full range of motion.

Result

The expected range is 0.5 to 4.5 volts.

- The voltage drops below 0.5 volts.

  Replace the sensor.

  See step 2 to validate the repair.

- The voltage range is 0.5 to 4.5 volts.

  The armrest ECU is suspect.

  See step 3 to check if the error persists.

3. Check if the diagnostic code remains.

a) Inspect and clean the harness connector contacts.
b) Connect all the connectors.
c) Turn the battery disconnect switch to the on position.
d) Turn the key start switch to the on position.
e) Operate the machine at low idle.
f) Check if the diagnostic code remains.

Result

- SPN 1955 FMI 04 is not active.

  Stop.
- SPN 1955 FMI 04 is active.

  Failure of the armrest module is possible but not common. Exit the procedure and do the procedure again. If the diagnostic code remains active, replace the module.

  Stop.

10.7.42.1 Auxiliary valve control sensors electrical schematic

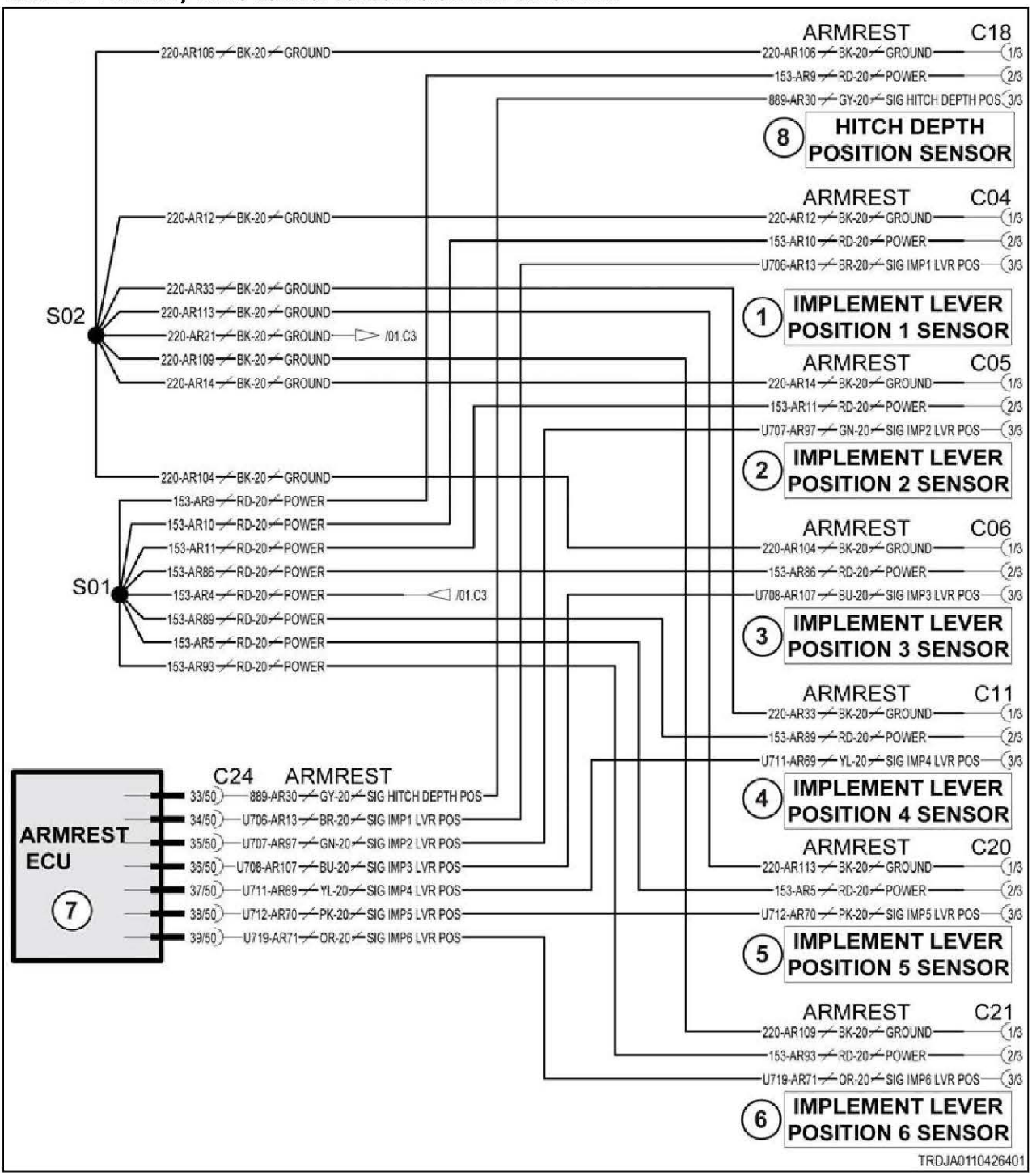

Fig. 372

Schematic legend		
Item	**Schematic term**	**Description**
1	IMPLEMENT LEVER POSITION 1 SENSOR	Implement lever 1 position sensor
2	IMPLEMENT LEVER POSITION 2 SENSOR	Implement lever 2 position sensor
3	IMPLEMENT LEVER POSITION 3 SENSOR	Implement lever 3 position sensor
4	IMPLEMENT LEVER POSITION 4 SENSOR	Implement lever 4 position sensor

Schematic legend		
Item	**Schematic term**	**Description**
5	IMPLEMENT LEVER POSITION 5 SENSOR	Implement lever 5 position sensor
6	IMPLEMENT LEVER POSITION 6 SENSOR	Implement lever 6 position sensor
7	ARMREST ECU	Armrest module
8	HITCH DEPTH POSITION SENSOR	Hitch depth position sensor
--	SIG HITCH DEPTH POS	Signal hitch depth position sensor
--	SIG IMP1 LVR POS	Signal implement lever 1 position sensor

10.7.42.2 Auxiliary valve control levers

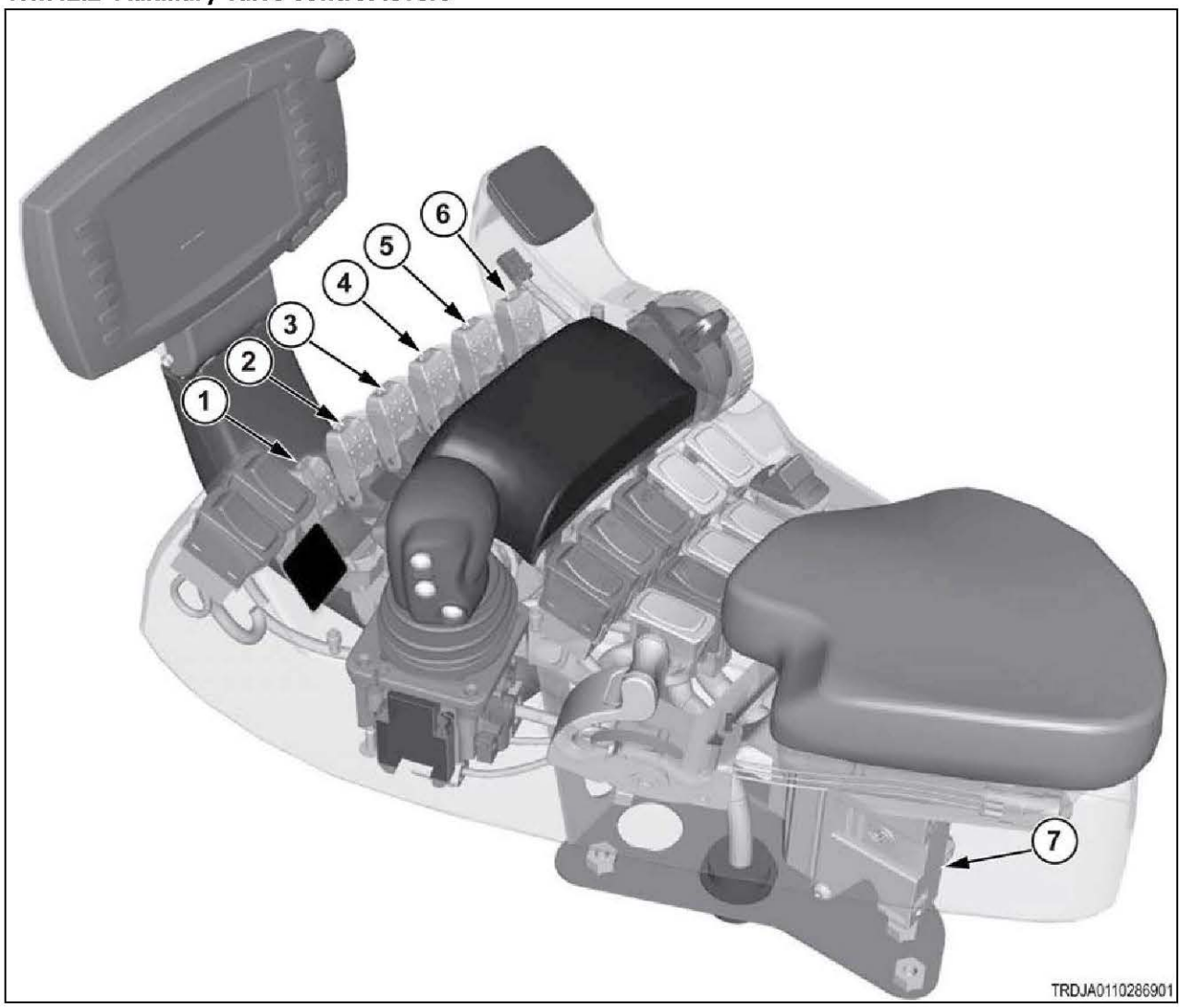

Fig. 373

(1)	Auxiliary valve 1 lever
(2)	Auxiliary valve 2 lever
(3)	Auxiliary valve 3 lever
(4)	Auxiliary valve 4 lever

(5)	Auxiliary valve 5 lever
(6)	Auxiliary valve 6 lever
(7)	Armrest module

10.7.43 Code SA 05 SPN 1967 FMI 00

The auxiliary valve lever 5 position sensor signal is above normal.

The valve lever position sensor is a semi-intelligent hall effect sensor that internally contains a hall effect position sensor to accurately detect the lever's angular position, and circuitry to translate the hall effect sinusoidal data into a linear 0.5 to 4.5 volt output signal to the armrest module.

This error is reported when the sensor data otherwise appears to be valid, but the data range exceeds 4.5 volts. The most likely cause is a faulty sensor.

Diagnosis and solution

1. Check the voltages at the sensor.

a) Open the armrest console to gain access to the sensor's harness connector.

b) Turn the key start switch to the on position, but do not start the engine.

c) Check the voltage between contacts 1 and 2 at the sensor connector.

The 12-volt fuse is known to be okay, because it also powers the armrest ECU itself, and this error could not be reported without power.

Result

- The voltage is not at or near 12 volts.

  Repair or replace the harness between the sensor and the armrest ECU.

  See step 2 to validate the repair.
- The voltage is at or near 12 volts.

  Continue.

d) Check the voltage between contacts 1 and 3 at the sensor connector while moving tthe lever through its full range of motion.

Result

The expected range is 0.5 to 4.5 volts.

- The voltage exceeds 4.5 volts.

  Replace the sensor.

  See step 2 to validate the repair.
- The voltage range is 0.5 to 4.5 volts.

  Inspect the sensor and ECU harness connectors for loose or corroded terminals

  See step 2 to check if the error persists.

2. Check if the diagnostic code remains.

a) Inspect and clean the harness connector contacts.

b) Connect all the connectors.

c) Turn the battery disconnect switch to the on position.

d) Turn the key start switch to the on position.

e) Operate the machine at low idle.

f) Check if the diagnostic code remains.

Result

- SPN 1967 FMI 00 is not active.

  Stop.
- SPN 1967 FMI 00 is active.

  Failure of the armrest module is possible but not common. Exit the procedure and do the procedure again. If the diagnostic code remains active, replace the module.

  Stop.

10.7.43.1 Auxiliary valve control sensors electrical schematic

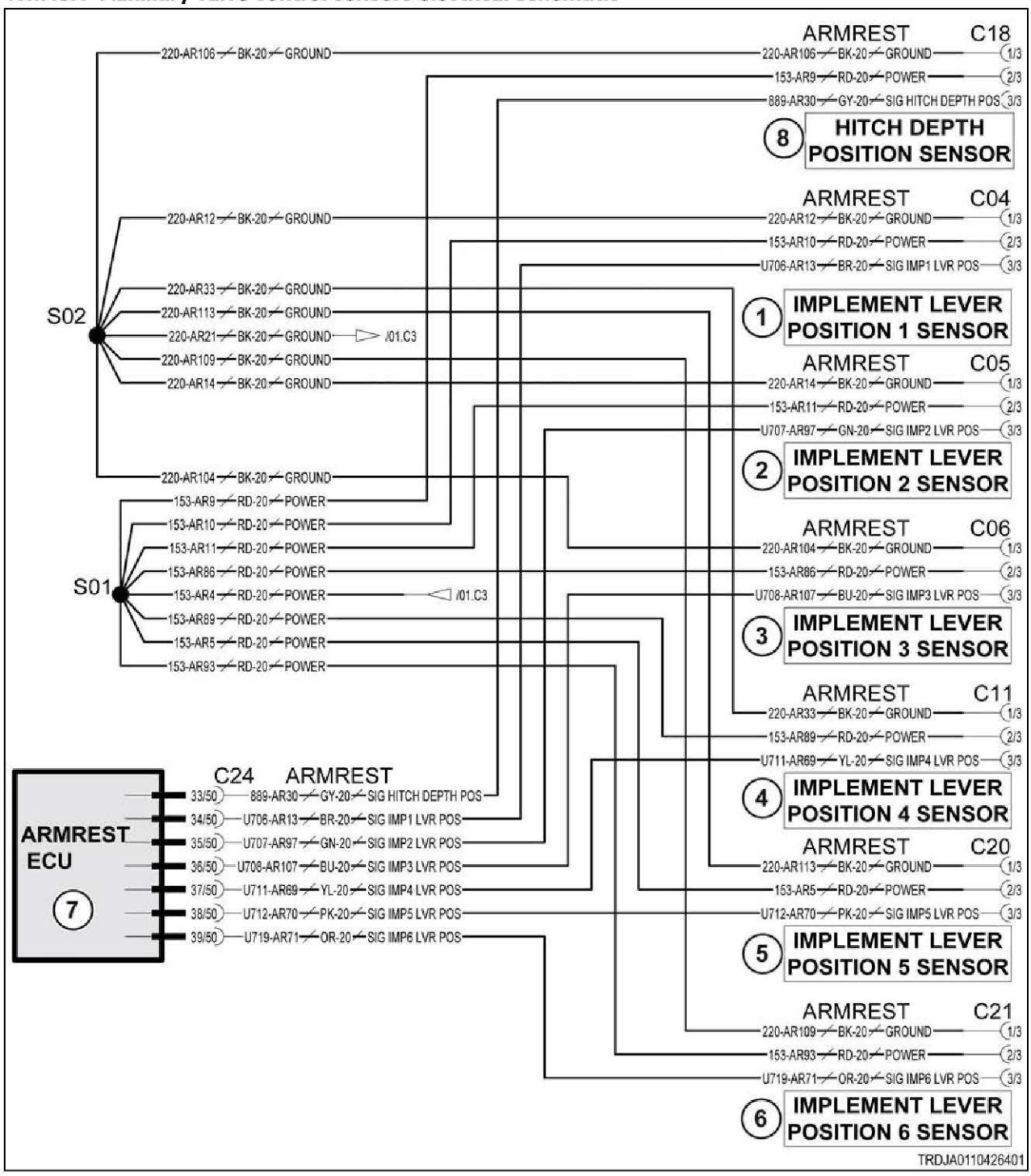

Fig. 374

Schematic legend		
Item	**Schematic term**	**Description**
1	IMPLEMENT LEVER POSITION 1 SENSOR	Implement lever 1 position sensor
2	IMPLEMENT LEVER POSITION 2 SENSOR	Implement lever 2 position sensor
3	IMPLEMENT LEVER POSITION 3 SENSOR	Implement lever 3 position sensor
4	IMPLEMENT LEVER POSITION 4 SENSOR	Implement lever 4 position sensor
5	IMPLEMENT LEVER POSITION 5 SENSOR	Implement lever 5 position sensor
6	IMPLEMENT LEVER POSITION 6 SENSOR	Implement lever 6 position sensor
7	ARMREST ECU	Armrest module
8	HITCH DEPTH POSITION SENSOR	Hitch depth position sensor
--	SIG HITCH DEPTH POS	Signal hitch depth position sensor
--	SIG IMP1 LVR POS	Signal implement lever 1 position sensor

10.7.43.2 Auxiliary valve control levers

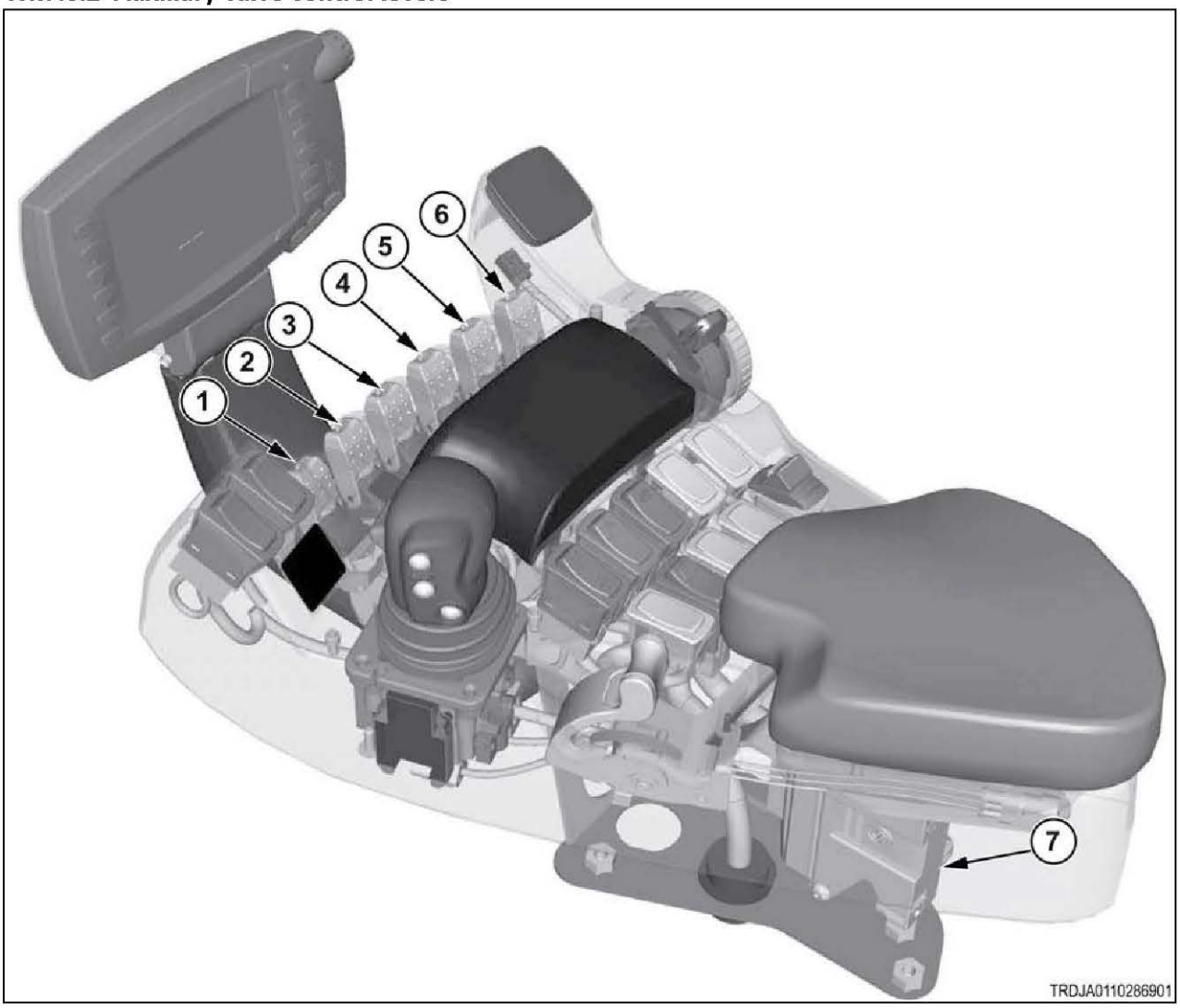

Fig. 375

(1)	Auxiliary valve 1 lever
(2)	Auxiliary valve 2 lever
(3)	Auxiliary valve 3 lever
(4)	Auxiliary valve 4 lever
(5)	Auxiliary valve 5 lever
(6)	Auxiliary valve 6 lever
(7)	Armrest module

10.7.44 Code SA 05 SPN 1967 FMI 01

The auxiliary valve lever 5 position sensor signal voltage is below normal.

The valve lever position sensor is a semi-intelligent hall effect sensor that internally contains a hall effect position sensor to accurately detect the lever's angular position, and circuitry to translate the hall effect sinusoidal data into a linear 0.5 to 4.5 volt output signal to the armrest module.

This error is reported when the sensor data otherwise appears to be valid, but the data range goes below 0.5 volts. The most likely cause is a faulty sensor.

Diagnosis and solution

1. Check the voltages at the sensor.

a) Open the armrest console to gain access to the sensor's harness connector.

b) Turn the key start switch to the on position, but do not start the engine.

c) Check the voltage between contacts 1 and 2 at the sensor connector.

The 12-volt fuse is known to be okay, because it also powers the armrest ECU itself, and this error could not be reported without power.

Result

- The voltage is not at or near 12 volts.

  Repair or replace the harness between the sensor and the armrest ECU.

  See step 2 to validate the repair.
- The voltage is at or near 12 volts.

  Continue.

d) Check the voltage between contacts 1 and 3 at the sensor connector while moving tthe lever through its full range of motion.

Result

The expected range is 0.5 to 4.5 volts.

- The voltage drops below 0.5 volts.

  Replace the sensor.

  See step 2 to validate the repair.
- The voltage range is 0.5 to 4.5 volts.

  Inspect the sensor and ECU harness connectors for loose or corroded terminals

  See step 2 to check if the error persists.

2. Check if the diagnostic code remains.

a) Inspect and clean the harness connector contacts.

b) Connect all the connectors.

c) Turn the battery disconnect switch to the on position.

d) Turn the key start switch to the on position.

e) Operate the machine at low idle.
f) Check if the diagnostic code remains.

Result

- SPN 1967 FMI 01 is not active.

  Stop.
- SPN 1967 FMI 01 is active.

  Failure of the armrest module is possible but not common. Exit the procedure and do the procedure again. If the diagnostic code remains active, replace the module.

  Stop.

10.7.44.1 Auxiliary valve control sensors electrical schematic

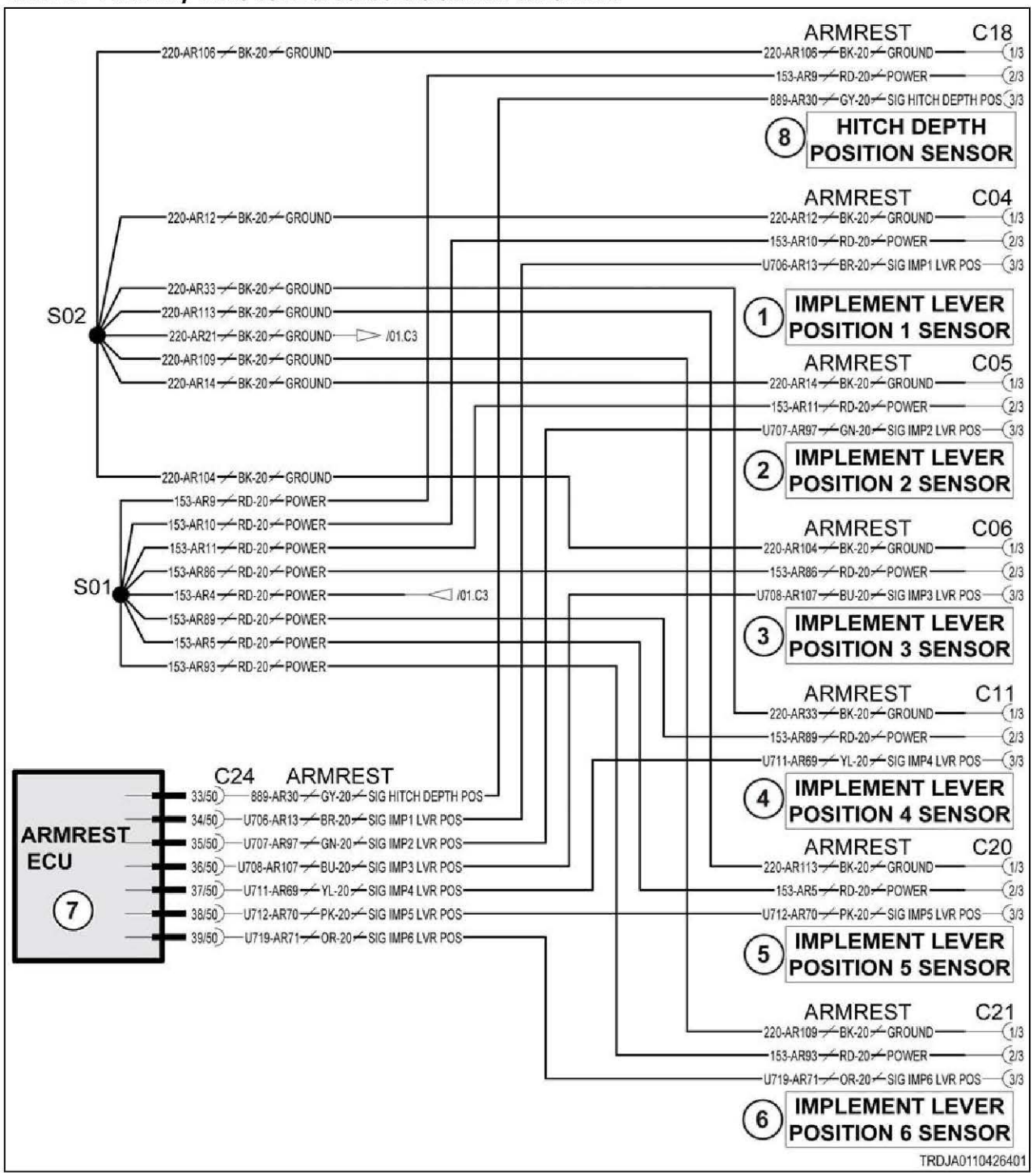

Fig. 376

Schematic legend		
Item	**Schematic term**	**Description**
1	IMPLEMENT LEVER POSITION 1 SENSOR	Implement lever 1 position sensor
2	IMPLEMENT LEVER POSITION 2 SENSOR	Implement lever 2 position sensor
3	IMPLEMENT LEVER POSITION 3 SENSOR	Implement lever 3 position sensor
4	IMPLEMENT LEVER POSITION 4 SENSOR	Implement lever 4 position sensor

Schematic legend		
Item	**Schematic term**	**Description**
5	IMPLEMENT LEVER POSITION 5 SENSOR	Implement lever 5 position sensor
6	IMPLEMENT LEVER POSITION 6 SENSOR	Implement lever 6 position sensor
7	ARMREST ECU	Armrest module
8	HITCH DEPTH POSITION SENSOR	Hitch depth position sensor
--	SIG HITCH DEPTH POS	Signal hitch depth position sensor
--	SIG IMP1 LVR POS	Signal implement lever 1 position sensor

10.7.44.2 Auxiliary valve control levers

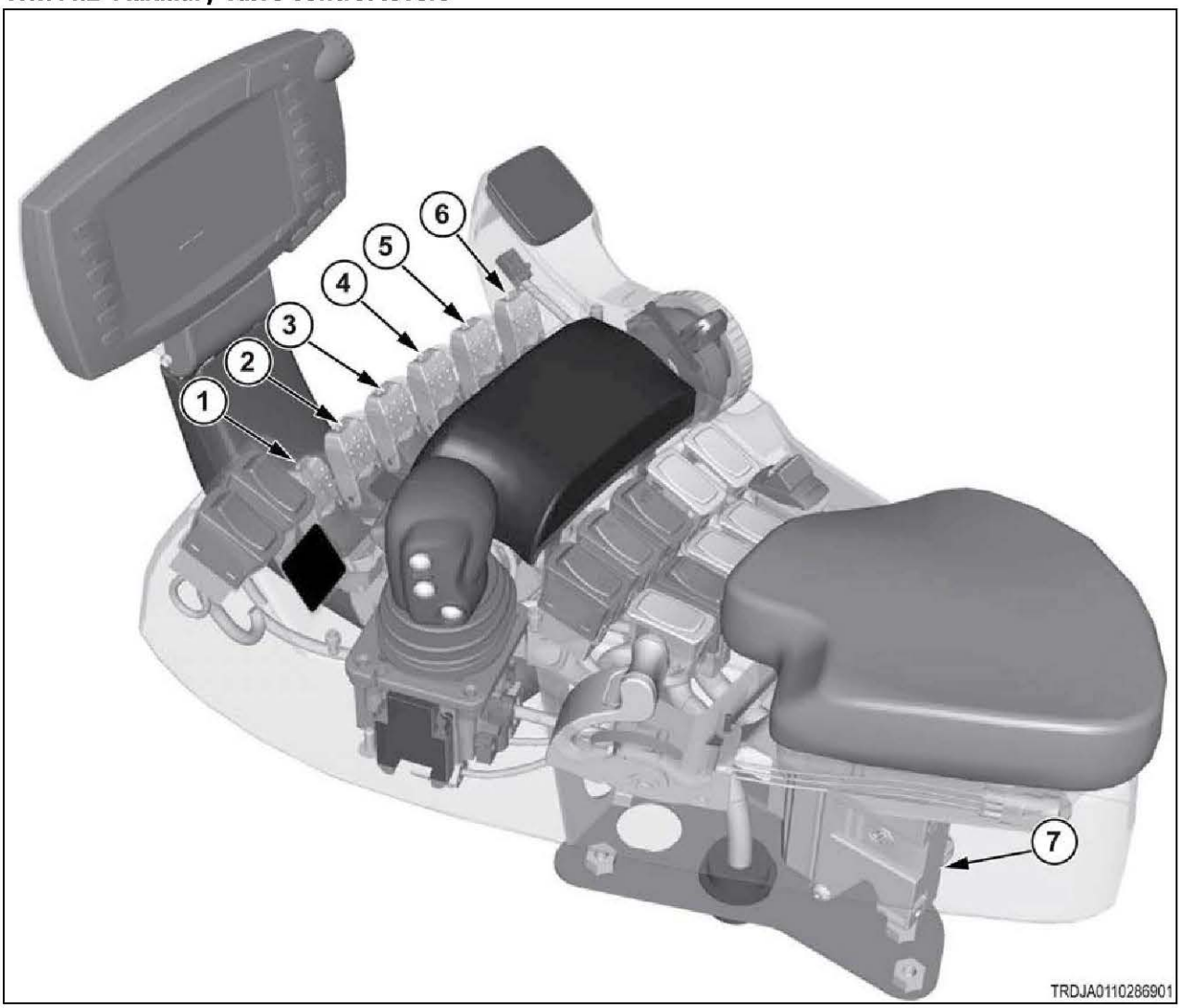

Fig. 377

(1)	Auxiliary valve 1 lever
(2)	Auxiliary valve 2 lever
(3)	Auxiliary valve 3 lever
(4)	Auxiliary valve 4 lever

(5)	Auxiliary valve 5 lever
(6)	Auxiliary valve 6 lever
(7)	Armrest module

10.7.45 Code SA 05 SPN 1967 FMI 03

The auxiliary valve lever 5 position sensor voltage is out of range - high.

The valve lever position sensor is a semi-intelligent hall effect sensor that internally contains a hall effect position sensor to accurately detect the lever's angular position, and circuitry to translate the hall effect sinusoidal data into a linear 0.5 to 4.5 volt output signal to the armrest module.

This error is reported when the sensor data is not valid and exceeds 4.5 volts. The most likely cause is a faulty sensor or short circuit to power.

Diagnosis and solution

1. Check the harness for short circuit.

a) Turn the start switch to the off position.
b) Turn the battery disconnect switch to the off position.
c) Disconnect the harness connector from the sensor.
d) Disconnect the harness connector from the armrest module.
e) Check the resistance from contact C24-38 to all other C24 contacts at the armrest connector.

Result

- One or more resistance measurement is at or near 0 ohms.

  Repair or replace the armrest harness.

  See step 3 to validate the repair.
- All resistance measurements were high (not near 0 ohms).

  See step 2 to check the sensor voltages.

2. Check the voltages at the sensor.

a) Reconnect the sensor and ECU.
b) Turn the key start switch to the on position, but do not start the engine.
c) Check the voltage between contacts 1 and 2 at the sensor connector.

The 12-volt fuse is known to be okay, because it also powers the armrest ECU itself, and this error could not be reported without power.

Result

- The voltage is not at or near 12 volts.

  Repair or replace the harness between the sensor and the armrest ECU.

  See step 3 to validate the repair.
- The voltage is at or near 12 volts.

  Continue.

d) Check the voltage between contacts 1 and 3 at the sensor connector while moving tthe lever through its full range of motion.

Result

The expected range is 0.5 to 4.5 volts.

- The voltage exceeds 4.5 volts.

  Replace the sensor.

  See step 2 to validate the repair.

- The voltage range is 0.5 to 4.5 volts.

  The armrest ECU is suspect.

  See step 3 to check if the error persists.

3. Check if the diagnostic code remains.

a) Inspect and clean the harness connector contacts.
b) Connect all the connectors.
c) Turn the battery disconnect switch to the on position.
d) Turn the key start switch to the on position.
e) Operate the machine at low idle.
f) Check if the diagnostic code remains.

Result

- SPN 1967 FMI 03 is not active.

  Stop.
- SPN 1967 FMI 03 is active.

  Failure of the armrest module is possible but not common. Exit the procedure and do the procedure again. If the diagnostic code remains active, replace the module.

  Stop.

10.7.45.1 Auxiliary valve control sensors electrical schematic

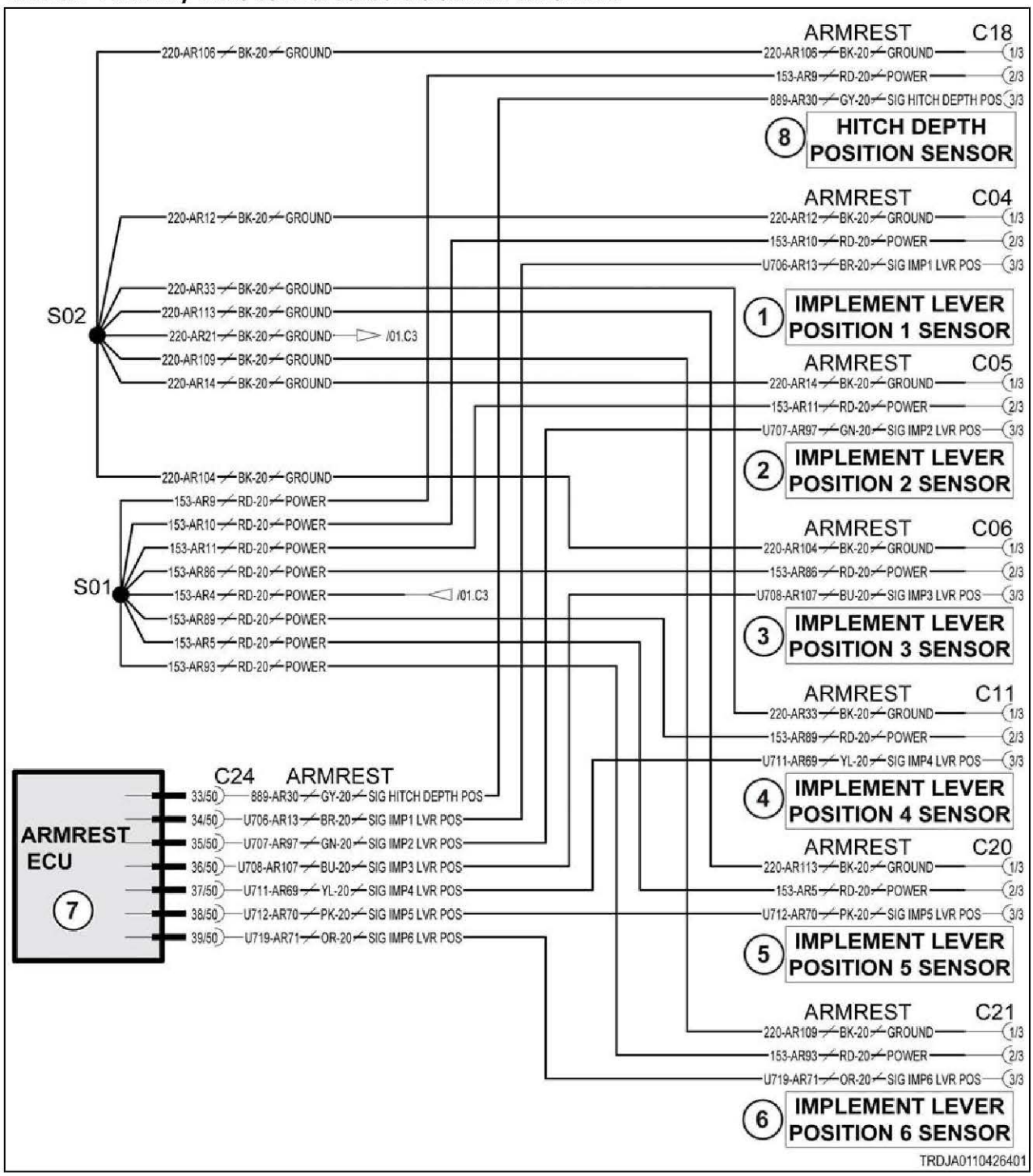

Fig. 378

Schematic legend		
Item	**Schematic term**	**Description**
1	IMPLEMENT LEVER POSITION 1 SENSOR	Implement lever 1 position sensor
2	IMPLEMENT LEVER POSITION 2 SENSOR	Implement lever 2 position sensor
3	IMPLEMENT LEVER POSITION 3 SENSOR	Implement lever 3 position sensor
4	IMPLEMENT LEVER POSITION 4 SENSOR	Implement lever 4 position sensor

Schematic legend		
Item	**Schematic term**	**Description**
5	IMPLEMENT LEVER POSITION 5 SENSOR	Implement lever 5 position sensor
6	IMPLEMENT LEVER POSITION 6 SENSOR	Implement lever 6 position sensor
7	ARMREST ECU	Armrest module
8	HITCH DEPTH POSITION SENSOR	Hitch depth position sensor
--	SIG HITCH DEPTH POS	Signal hitch depth position sensor
--	SIG IMP1 LVR POS	Signal implement lever 1 position sensor

10.7.45.2 Auxiliary valve control levers

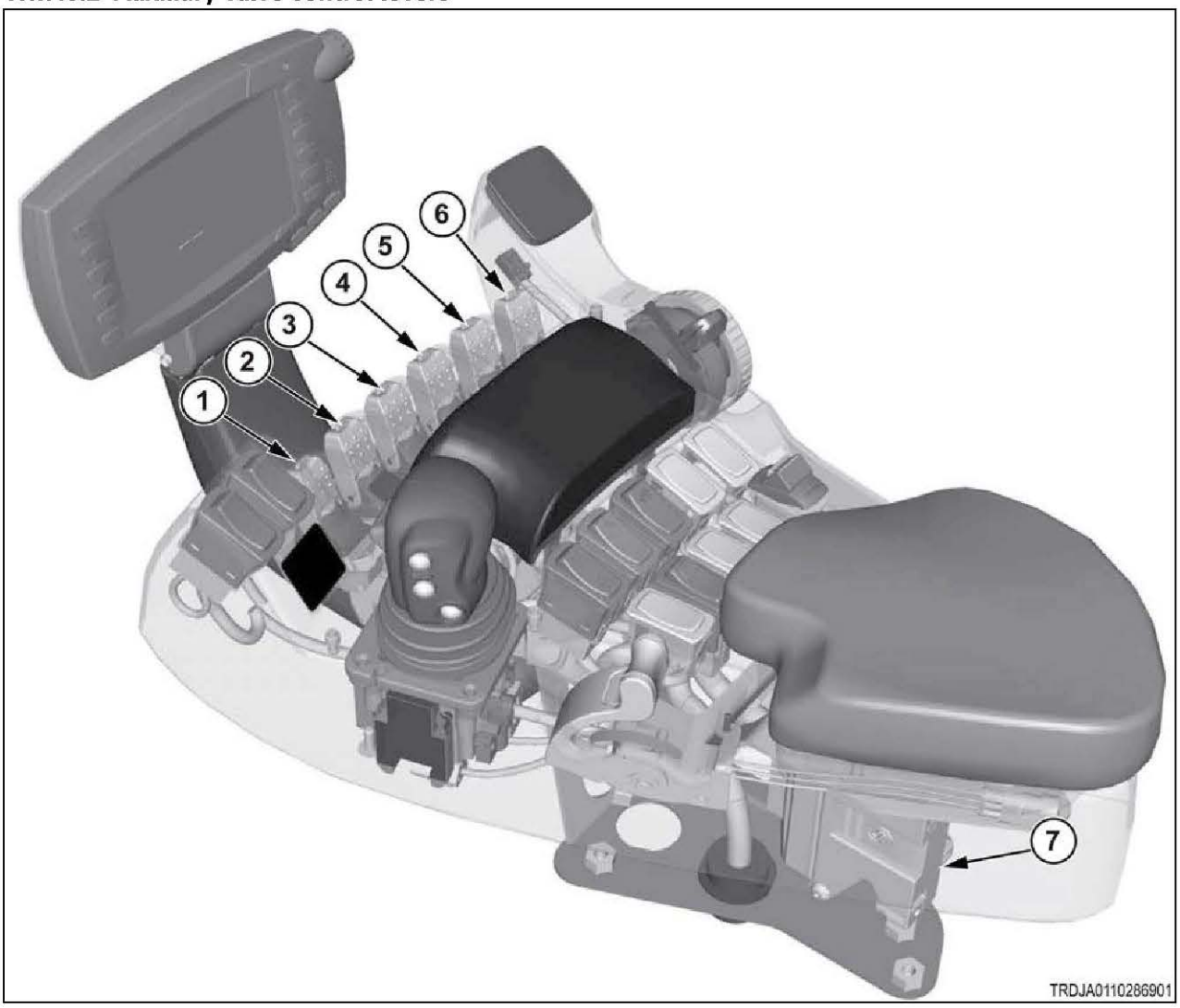

Fig. 379

(1)	Auxiliary valve 1 lever
(2)	Auxiliary valve 2 lever
(3)	Auxiliary valve 3 lever
(4)	Auxiliary valve 4 lever

(5)	Auxiliary valve 5 lever
(6)	Auxiliary valve 6 lever
(7)	Armrest module

10.7.46 Code SA 05 SPN 1967 FMI 04

The auxiliary valve lever 5 position sensor signal voltage is out of range - low.

The valve lever position sensor is a semi-intelligent hall effect sensor that internally contains a hall effect position sensor to accurately detect the lever's angular position, and circuitry to translate the hall effect sinusoidal data into a linear 0.5 to 4.5 volt output signal to the armrest module.

This error is reported when the sensor data is not valid and drops below 0.5 volts. The most likely cause is a faulty sensor or short circuit to ground.

Diagnosis and solution

1. Check the harness for short circuit.

a) Turn the start switch to the off position.
b) Turn the battery disconnect switch to the off position.
c) Disconnect the harness connector from the sensor.
d) Disconnect the harness connector from the armrest module.
e) Check the resistance from contact C24-38 to all other C24 contacts at the armrest connector.

Result

- One or more resistance measurement is at or near 0 ohms.

  Repair or replace the armrest harness.

  See step 3 to validate the repair.
- All resistance measurements were high (not near 0 ohms).

  See step 2 to check the sensor voltages.

2. Check the voltages at the sensor.

a) Reconnect the sensor and ECU.
b) Turn the key start switch to the on position, but do not start the engine.
c) Check the voltage between contacts 1 and 2 at the sensor connector.

The 12-volt fuse is known to be okay, because it also powers the armrest ECU itself, and this error could not be reported without power.

Result

- The voltage is not at or near 12 volts.

  Repair or replace the harness between the sensor and the armrest ECU.

  See step 3 to validate the repair.
- The voltage is at or near 12 volts.

  Continue.

d) Check the voltage between contacts 1 and 3 at the sensor connector while moving tthe lever through its full range of motion.

Result

The expected range is 0.5 to 4.5 volts.

- The voltage drops below 0.5 volts.

  Replace the sensor.

  See step 2 to validate the repair.

- The voltage range is 0.5 to 4.5 volts.

  The armrest ECU is suspect.

  See step 3 to check if the error persists.

3. Check if the diagnostic code remains.

a) Inspect and clean the harness connector contacts.
b) Connect all the connectors.
c) Turn the battery disconnect switch to the on position.
d) Turn the key start switch to the on position.
e) Operate the machine at low idle.
f) Check if the diagnostic code remains.

Result

- SPN 1967 FMI 04 is not active.

  Stop.
- SPN 1967 FMI 04 is active.

  Failure of the armrest module is possible but not common. Exit the procedure and do the procedure again. If the diagnostic code remains active, replace the module.

  Stop.

10.7.46.1 Auxiliary valve control sensors electrical schematic

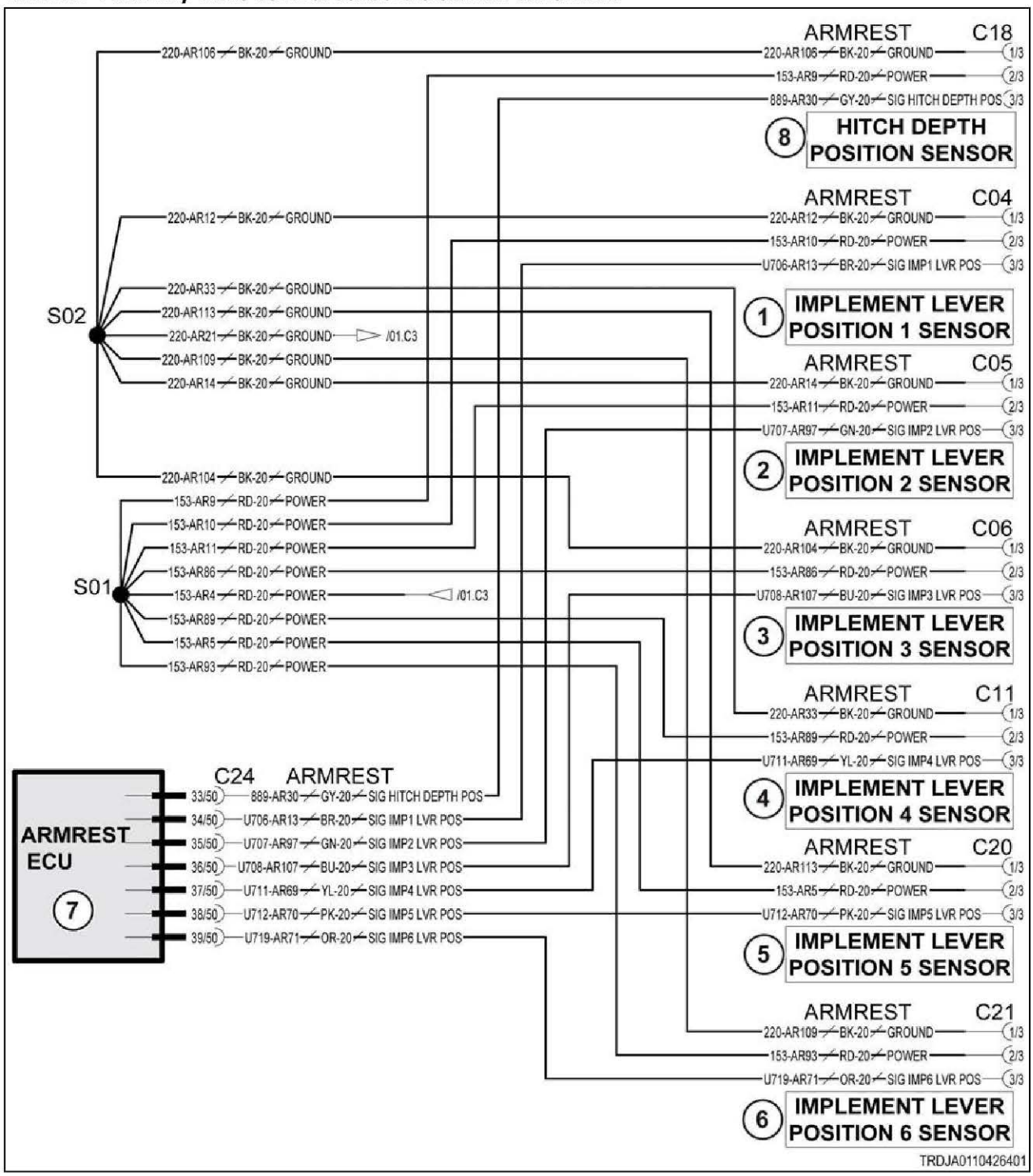

Fig. 380

Schematic legend		
Item	**Schematic term**	**Description**
1	IMPLEMENT LEVER POSITION 1 SENSOR	Implement lever 1 position sensor
2	IMPLEMENT LEVER POSITION 2 SENSOR	Implement lever 2 position sensor
3	IMPLEMENT LEVER POSITION 3 SENSOR	Implement lever 3 position sensor
4	IMPLEMENT LEVER POSITION 4 SENSOR	Implement lever 4 position sensor

Schematic legend		
Item	**Schematic term**	**Description**
5	IMPLEMENT LEVER POSITION 5 SENSOR	Implement lever 5 position sensor
6	IMPLEMENT LEVER POSITION 6 SENSOR	Implement lever 6 position sensor
7	ARMREST ECU	Armrest module
8	HITCH DEPTH POSITION SENSOR	Hitch depth position sensor
--	SIG HITCH DEPTH POS	Signal hitch depth position sensor
--	SIG IMP1 LVR POS	Signal implement lever 1 position sensor

10.7.46.2 Auxiliary valve control levers

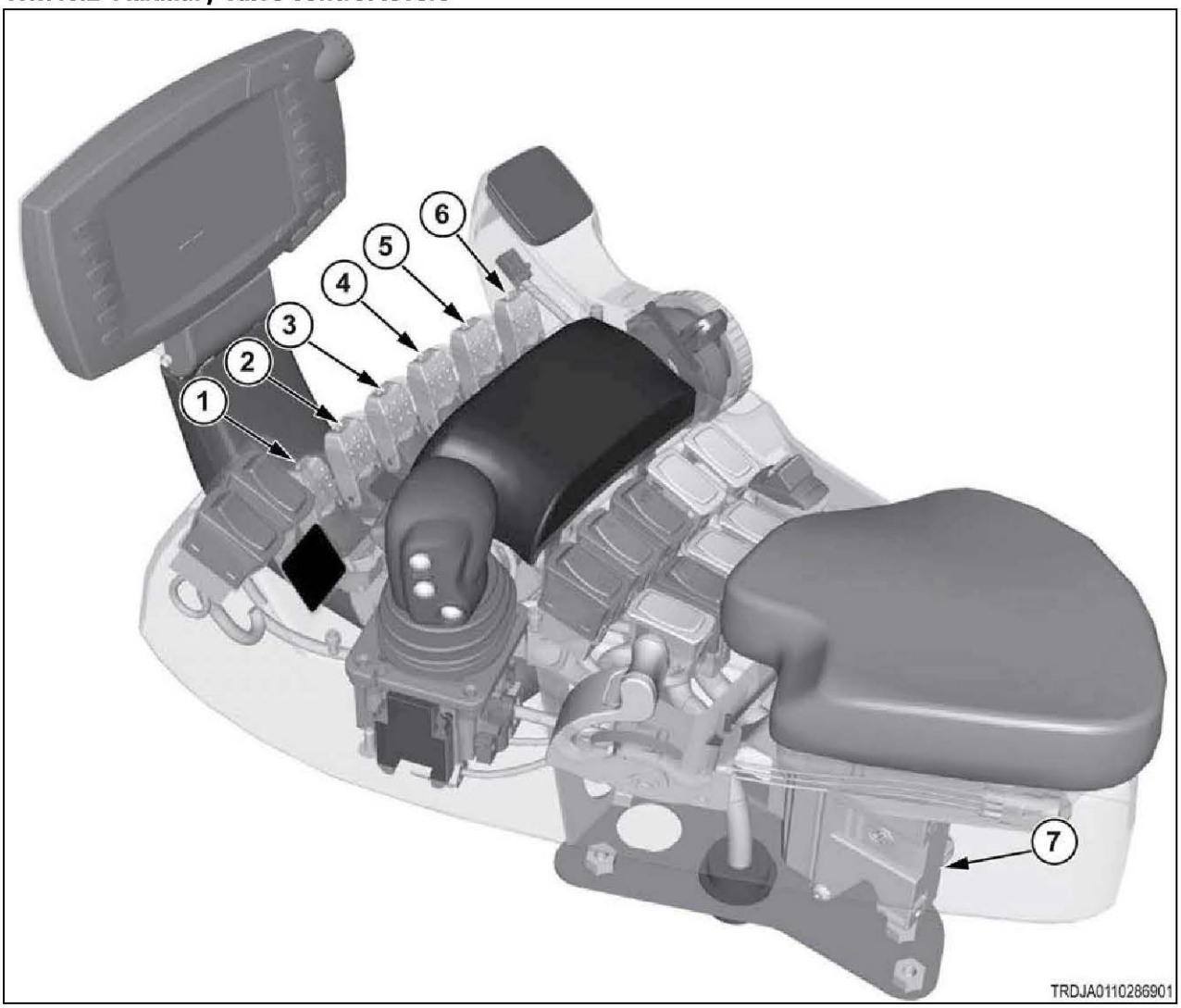

Fig. 381

(1)	Auxiliary valve 1 lever
(2)	Auxiliary valve 2 lever
(3)	Auxiliary valve 3 lever
(4)	Auxiliary valve 4 lever

(5)	Auxiliary valve 5 lever
(6)	Auxiliary valve 6 lever
(7)	Armrest module

10.7.47 Code SA 05 SPN 1979 FMI 00

The auxiliary valvelever 6 position sensor signal is above normal.

The valve lever position sensor is a semi-intelligent hall effect sensor that internally contains a hall effect position sensor to accurately detect the lever's angular position, and circuitry to translate the hall effect sinusoidal data into a linear 0.5 to 4.5 volt output signal to the armrest module.

This error is reported when the sensor data otherwise appears to be valid, but the data range exceeds 4.5 volts. The most likely cause is a faulty sensor.

Diagnosis and solution

1. Check the voltages at the sensor.

a) Open the armrest console to gain access to the sensor's harness connector.

b) Turn the key start switch to the on position, but do not start the engine.

c) Check the voltage between contacts 1 and 2 at the sensor connector.

The 12-volt fuse is known to be okay, because it also powers the armrest ECU itself, and this error could not be reported without power.

Result

- The voltage is not at or near 12 volts.

  Repair or replace the harness between the sensor and the armrest ECU.

  See step 2 to validate the repair.
- The voltage is at or near 12 volts.

  Continue.

d) Check the voltage between contacts 1 and 3 at the sensor connector while moving tthe lever through its full range of motion.

Result

The expected range is 0.5 to 4.5 volts.

- The voltage exceeds 4.5 volts.

  Replace the sensor.

  See step 2 to validate the repair.
- The voltage range is 0.5 to 4.5 volts.

  Inspect the sensor and ECU harness connectors for loose or corroded terminals

  See step 2 to check if the error persists.

2. Check if the diagnostic code remains.

a) Inspect and clean the harness connector contacts.

b) Connect all the connectors.

c) Turn the battery disconnect switch to the on position.

d) Turn the key start switch to the on position.

e) Operate the machine at low idle.

f) Check if the diagnostic code remains.

Result

- SPN 1979 FMI 00 is not active.

  Stop.
- SPN 1979 FMI 00 is active.

  Failure of the armrest module is possible but not common. Exit the procedure and do the procedure again. If the diagnostic code remains active, replace the module.

  Stop.

10.7.47.1 Auxiliary valve control sensors electrical schematic

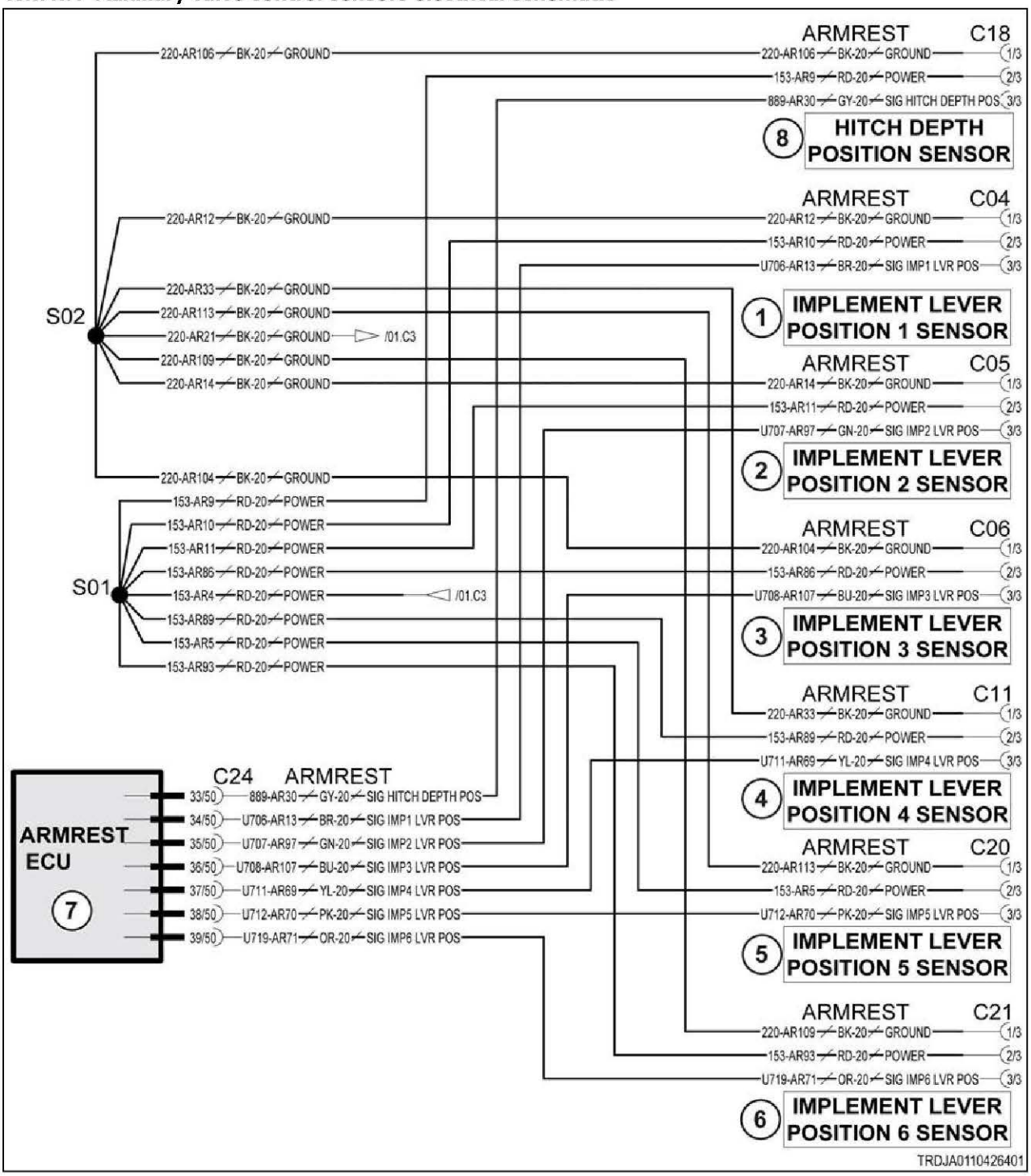

Fig. 382

Schematic legend		
Item	**Schematic term**	**Description**
1	IMPLEMENT LEVER POSITION 1 SENSOR	Implement lever 1 position sensor
2	IMPLEMENT LEVER POSITION 2 SENSOR	Implement lever 2 position sensor
3	IMPLEMENT LEVER POSITION 3 SENSOR	Implement lever 3 position sensor
4	IMPLEMENT LEVER POSITION 4 SENSOR	Implement lever 4 position sensor
5	IMPLEMENT LEVER POSITION 5 SENSOR	Implement lever 5 position sensor
6	IMPLEMENT LEVER POSITION 6 SENSOR	Implement lever 6 position sensor
7	ARMREST ECU	Armrest module
8	HITCH DEPTH POSITION SENSOR	Hitch depth position sensor
--	SIG HITCH DEPTH POS	Signal hitch depth position sensor
--	SIG IMP1 LVR POS	Signal implement lever 1 position sensor

10.7.47.2 Auxiliary valve control levers

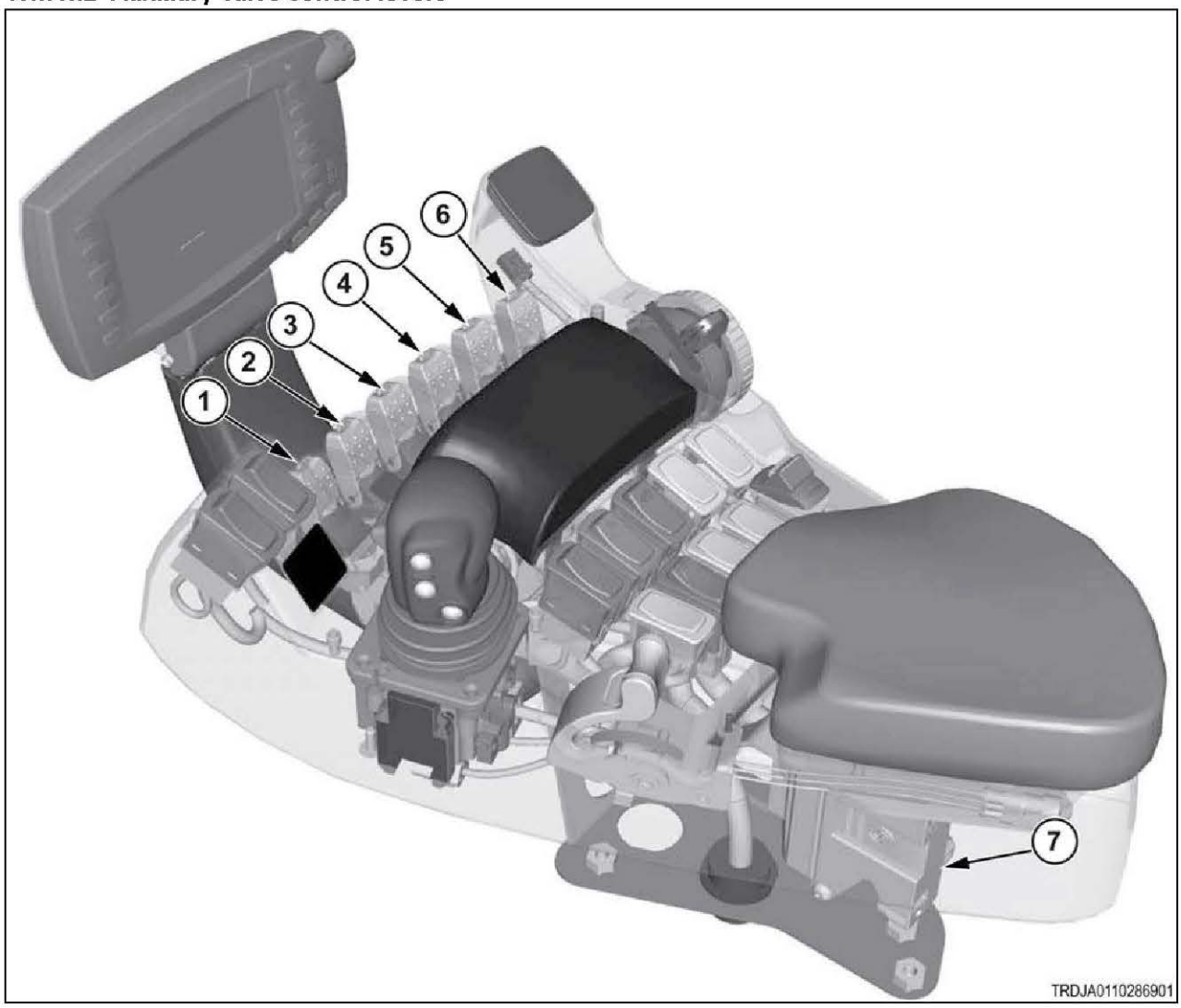

Fig. 383

(1)	Auxiliary valve 1 lever
(2)	Auxiliary valve 2 lever
(3)	Auxiliary valve 3 lever
(4)	Auxiliary valve 4 lever
(5)	Auxiliary valve 5 lever
(6)	Auxiliary valve 6 lever
(7)	Armrest module

10.7.48 Code SA 05 SPN 1979 FMI 01

The auxiliary valve lever 6 position sensor signal voltage is below normal.

The valve lever position sensor is a semi-intelligent hall effect sensor that internally contains a hall effect position sensor to accurately detect the lever's angular position, and circuitry to translate the hall effect sinusoidal data into a linear 0.5 to 4.5 volt output signal to the armrest module.

This error is reported when the sensor data otherwise appears to be valid, but the data range goes below 0.5 volts. The most likely cause is a faulty sensor.

Diagnosis and solution

1. Check the voltages at the sensor.

a) Open the armrest console to gain access to the sensor's harness connector.

b) Turn the key start switch to the on position, but do not start the engine.

c) Check the voltage between contacts 1 and 2 at the sensor connector.

The 12-volt fuse is known to be okay, because it also powers the armrest ECU itself, and this error could not be reported without power.

Result

- The voltage is not at or near 12 volts.

  Repair or replace the harness between the sensor and the armrest ECU.

  See step 2 to validate the repair.
- The voltage is at or near 12 volts.

  Continue.

d) Check the voltage between contacts 1 and 3 at the sensor connector while moving tthe lever through its full range of motion.

Result

The expected range is 0.5 to 4.5 volts.

- The voltage drops below 0.5 volts.

  Replace the sensor.

  See step 2 to validate the repair.
- The voltage range is 0.5 to 4.5 volts.

  Inspect the sensor and ECU harness connectors for loose or corroded terminals

  See step 2 to check if the error persists.

2. Check if the diagnostic code remains.

a) Inspect and clean the harness connector contacts.

b) Connect all the connectors.

c) Turn the battery disconnect switch to the on position.

d) Turn the key start switch to the on position.

e) Operate the machine at low idle.
f) Check if the diagnostic code remains.

Result

- SPN 1979 FMI 01 is not active.

  Stop.
- SPN 1979 FMI 01 is active.

  Failure of the armrest module is possible but not common. Exit the procedure and do the procedure again. If the diagnostic code remains active, replace the module.

  Stop.

10.7.48.1 Auxiliary valve control sensors electrical schematic

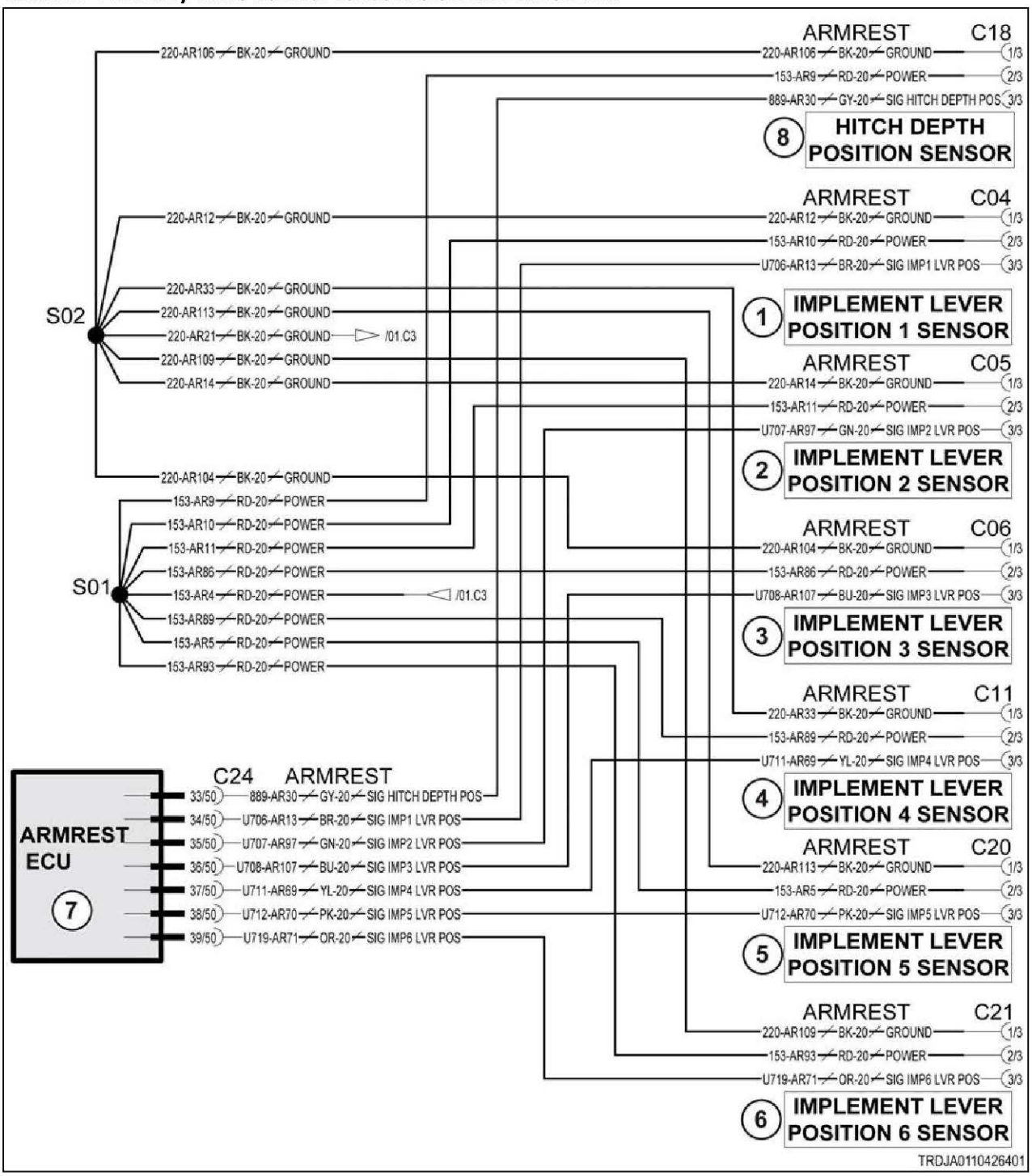

Fig. 384

Schematic legend		
Item	**Schematic term**	**Description**
1	IMPLEMENT LEVER POSITION 1 SENSOR	Implement lever 1 position sensor
2	IMPLEMENT LEVER POSITION 2 SENSOR	Implement lever 2 position sensor
3	IMPLEMENT LEVER POSITION 3 SENSOR	Implement lever 3 position sensor
4	IMPLEMENT LEVER POSITION 4 SENSOR	Implement lever 4 position sensor

Schematic legend		
Item	**Schematic term**	**Description**
5	IMPLEMENT LEVER POSITION 5 SENSOR	Implement lever 5 position sensor
6	IMPLEMENT LEVER POSITION 6 SENSOR	Implement lever 6 position sensor
7	ARMREST ECU	Armrest module
8	HITCH DEPTH POSITION SENSOR	Hitch depth position sensor
--	SIG HITCH DEPTH POS	Signal hitch depth position sensor
--	SIG IMP1 LVR POS	Signal implement lever 1 position sensor

10.7.48.2 Auxiliary valve control levers

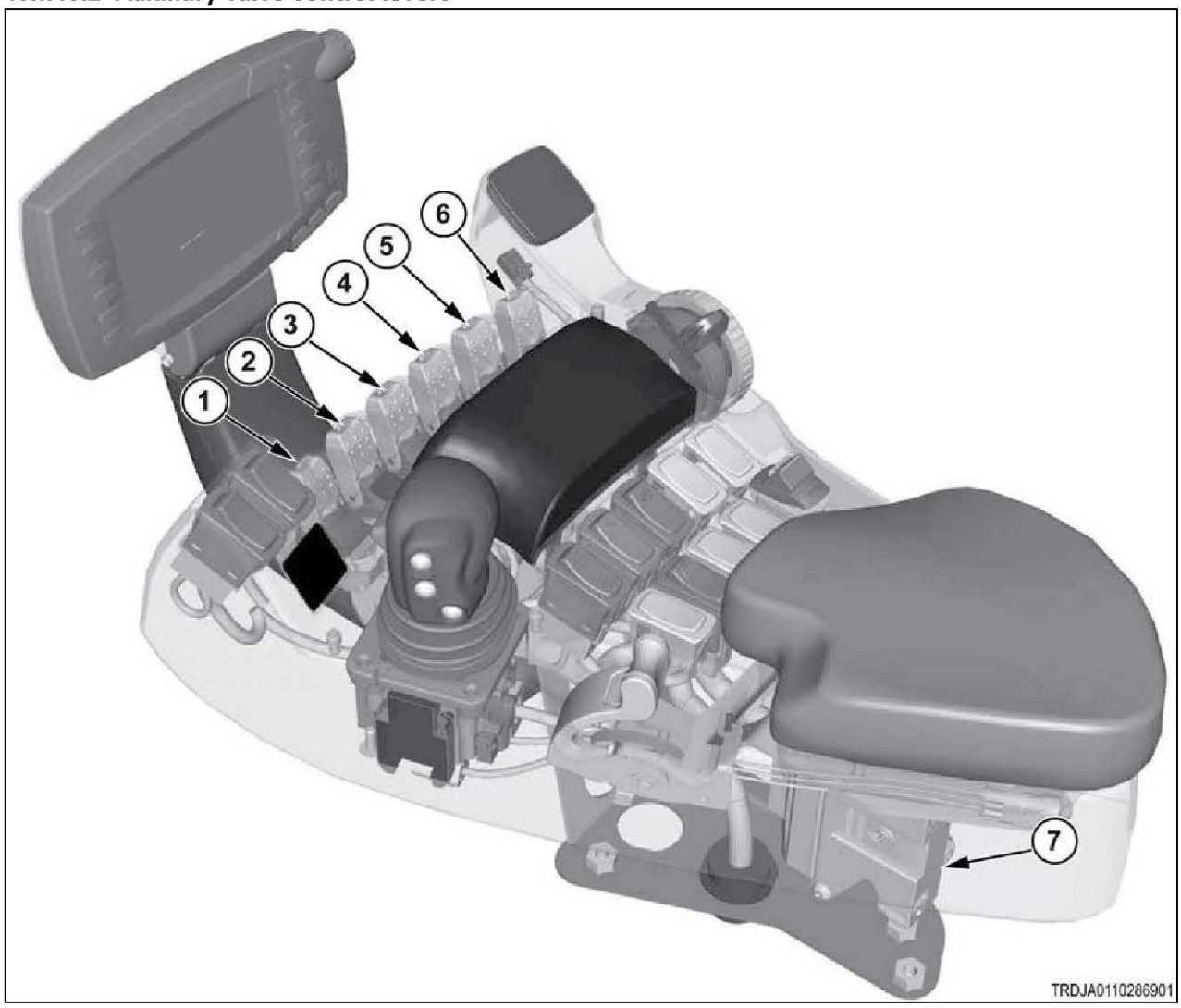

Fig. 385

(1)	Auxiliary valve 1 lever
(2)	Auxiliary valve 2 lever
(3)	Auxiliary valve 3 lever
(4)	Auxiliary valve 4 lever

(5)	Auxiliary valve 5 lever
(6)	Auxiliary valve 6 lever
(7)	Armrest module

10.7.49 Code SA 05 SPN 1979 FMI 03

The auxiliary valve lever 6 position sensor voltage is out of range - high.

The valve lever position sensor is a semi-intelligent hall effect sensor that internally contains a hall effect position sensor to accurately detect the lever's angular position, and circuitry to translate the hall effect sinusoidal data into a linear 0.5 to 4.5 volt output signal to the armrest module.

This error is reported when the sensor data is not valid and exceeds 4.5 volts. The most likely cause is a faulty sensor or short circuit to power.

Diagnosis and solution

1. Check the harness for short circuit.

a) Turn the start switch to the off position.
b) Turn the battery disconnect switch to the off position.
c) Disconnect the harness connector from the sensor.
d) Disconnect the harness connector from the armrest module.
e) Check the resistance from contact C24-39 to all other C24 contacts at the armrest connector.

Result

- One or more resistance measurement is at or near 0 ohms.

  Repair or replace the armrest harness.

  See step 3 to validate the repair.
- All resistance measurements were high (not near 0 ohms).

  See step 2 to check the sensor voltages.

2. Check the voltages at the sensor.

a) Reconnect the sensor and ECU.
b) Turn the key start switch to the on position, but do not start the engine.
c) Check the voltage between contacts 1 and 2 at the sensor connector.

The 12-volt fuse is known to be okay, because it also powers the armrest ECU itself, and this error could not be reported without power.

Result

- The voltage is not at or near 12 volts.

  Repair or replace the harness between the sensor and the armrest ECU.

  See step 3 to validate the repair.
- The voltage is at or near 12 volts.

  Continue.

d) Check the voltage between contacts 1 and 3 at the sensor connector while moving tthe lever through its full range of motion.

Result

The expected range is 0.5 to 4.5 volts.

- The voltage exceeds 4.5 volts.

  Replace the sensor.

  See step 2 to validate the repair.

- The voltage range is 0.5 to 4.5 volts.

  The armrest ECU is suspect.

  See step 3 to check if the error persists.

3. Check if the diagnostic code remains.

a) Inspect and clean the harness connector contacts.
b) Connect all the connectors.
c) Turn the battery disconnect switch to the on position.
d) Turn the key start switch to the on position.
e) Operate the machine at low idle.
f) Check if the diagnostic code remains.

Result

- SPN 1979 FMI 03 is not active.

  Stop.
- SPN 1979 FMI 03 is active.

  Failure of the armrest module is possible but not common. Exit the procedure and do the procedure again. If the diagnostic code remains active, replace the module.

  Stop.

10.7.49.1 Auxiliary valve control sensors electrical schematic

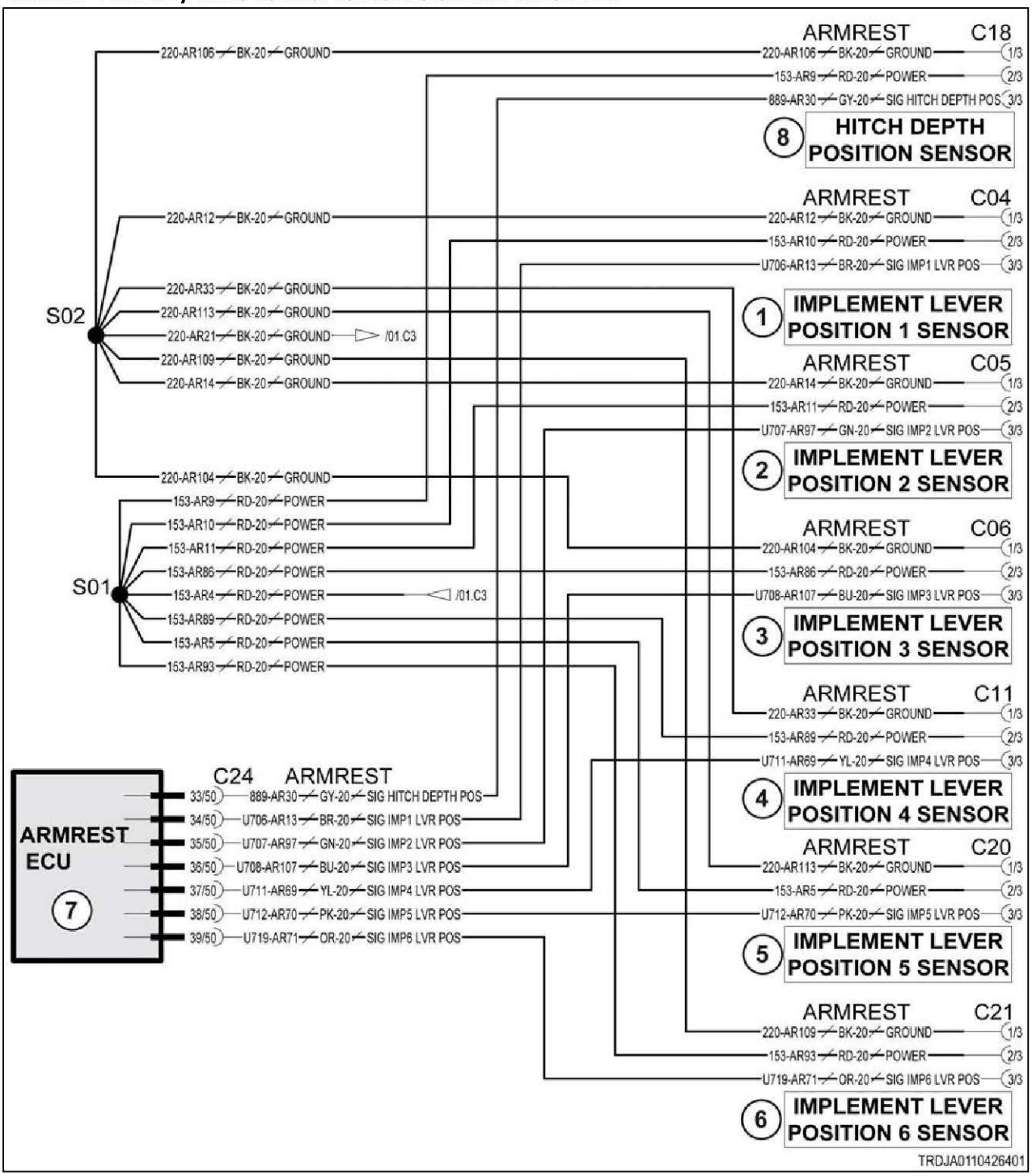

Fig. 386

Schematic legend		
Item	**Schematic term**	**Description**
1	IMPLEMENT LEVER POSITION 1 SENSOR	Implement lever 1 position sensor
2	IMPLEMENT LEVER POSITION 2 SENSOR	Implement lever 2 position sensor
3	IMPLEMENT LEVER POSITION 3 SENSOR	Implement lever 3 position sensor
4	IMPLEMENT LEVER POSITION 4 SENSOR	Implement lever 4 position sensor

Schematic legend		
Item	**Schematic term**	**Description**
5	IMPLEMENT LEVER POSITION 5 SENSOR	Implement lever 5 position sensor
6	IMPLEMENT LEVER POSITION 6 SENSOR	Implement lever 6 position sensor
7	ARMREST ECU	Armrest module
8	HITCH DEPTH POSITION SENSOR	Hitch depth position sensor
--	SIG HITCH DEPTH POS	Signal hitch depth position sensor
--	SIG IMP1 LVR POS	Signal implement lever 1 position sensor

10.7.49.2 Auxiliary valve control levers

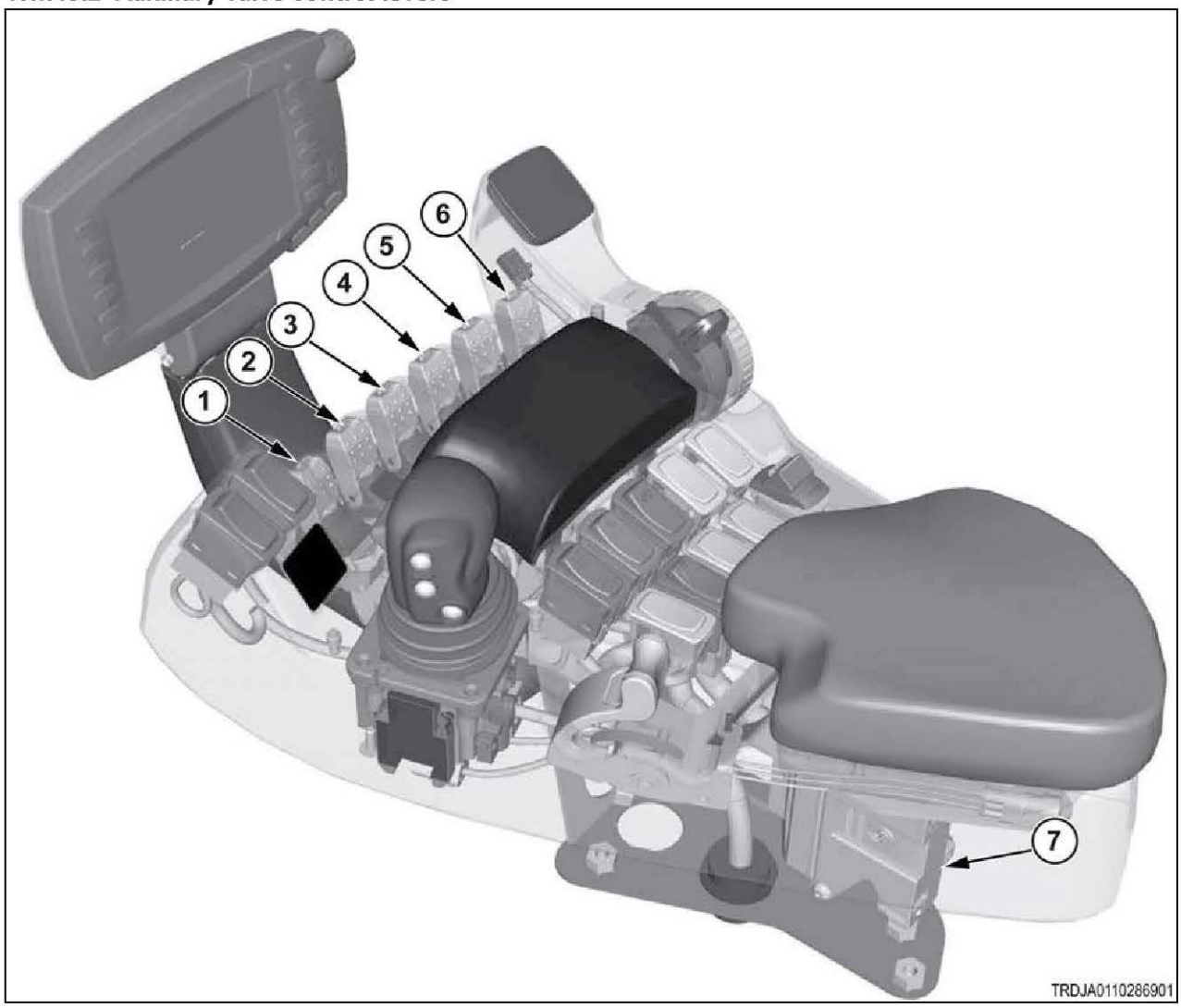

Fig. 387

(1)	Auxiliary valve 1 lever
(2)	Auxiliary valve 2 lever
(3)	Auxiliary valve 3 lever
(4)	Auxiliary valve 4 lever

(5)	Auxiliary valve 5 lever
(6)	Auxiliary valve 6 lever
(7)	Armrest module

10.7.50 Code SA 05 SPN 1979 FMI 04

The auxiliary valve lever 6 position sensor signal voltage is out of range - low.

The valve lever position sensor is a semi-intelligent hall effect sensor that internally contains a hall effect position sensor to accurately detect the lever's angular position, and circuitry to translate the hall effect sinusoidal data into a linear 0.5 to 4.5 volt output signal to the armrest module.

This error is reported when the sensor data is not valid and drops below 0.5 volts. The most likely cause is a faulty sensor or short circuit to ground.

Diagnosis and solution

1. Check the harness for short circuit.

a) Turn the start switch to the off position.
b) Turn the battery disconnect switch to the off position.
c) Disconnect the harness connector from the sensor.
d) Disconnect the harness connector from the armrest module.
e) Check the resistance from contact C24-39 to all other C24 contacts at the armrest connector.

Result

- One or more resistance measurement is at or near 0 ohms.

  Repair or replace the armrest harness.

  See step 3 to validate the repair.
- All resistance measurements were high (not near 0 ohms).

  See step 2 to check the sensor voltages.

2. Check the voltages at the sensor.

a) Reconnect the sensor and ECU.
b) Turn the key start switch to the on position, but do not start the engine.
c) Check the voltage between contacts 1 and 2 at the sensor connector.

The 12-volt fuse is known to be okay, because it also powers the armrest ECU itself, and this error could not be reported without power.

Result

- The voltage is not at or near 12 volts.

  Repair or replace the harness between the sensor and the armrest ECU.

  See step 3 to validate the repair.
- The voltage is at or near 12 volts.

  Continue.

d) Check the voltage between contacts 1 and 3 at the sensor connector while moving tthe lever through its full range of motion.

Result

The expected range is 0.5 to 4.5 volts.

- The voltage drops below 0.5 volts.

  Replace the sensor.

  See step 2 to validate the repair.

- The voltage range is 0.5 to 4.5 volts.

  The armrest ECU is suspect.

  See step 3 to check if the error persists.

3. Check if the diagnostic code remains.

a) Inspect and clean the harness connector contacts.
b) Connect all the connectors.
c) Turn the battery disconnect switch to the on position.
d) Turn the key start switch to the on position.
e) Operate the machine at low idle.
f) Check if the diagnostic code remains.

Result

- SPN 1979 FMI 04 is not active.

  Stop.
- SPN 1979 FMI 04 is active.

  Failure of the armrest module is possible but not common. Exit the procedure and do the procedure again. If the diagnostic code remains active, replace the module.

  Stop.

10.7.50.1 Auxiliary valve control sensors electrical schematic

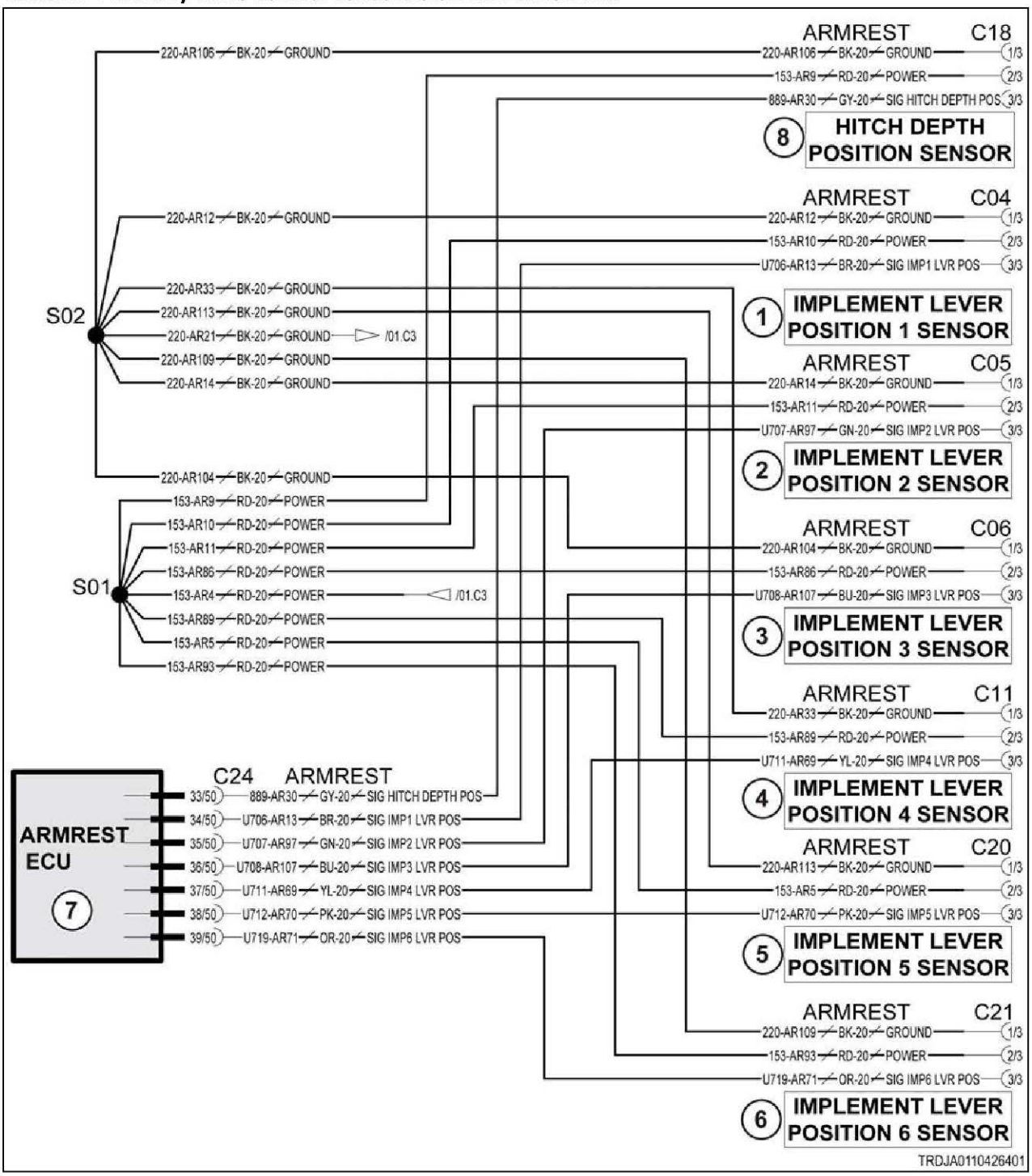

Fig. 388

Schematic legend		
Item	**Schematic term**	**Description**
1	IMPLEMENT LEVER POSITION 1 SENSOR	Implement lever 1 position sensor
2	IMPLEMENT LEVER POSITION 2 SENSOR	Implement lever 2 position sensor
3	IMPLEMENT LEVER POSITION 3 SENSOR	Implement lever 3 position sensor
4	IMPLEMENT LEVER POSITION 4 SENSOR	Implement lever 4 position sensor

Schematic legend		
Item	**Schematic term**	**Description**
5	IMPLEMENT LEVER POSITION 5 SENSOR	Implement lever 5 position sensor
6	IMPLEMENT LEVER POSITION 6 SENSOR	Implement lever 6 position sensor
7	ARMREST ECU	Armrest module
8	HITCH DEPTH POSITION SENSOR	Hitch depth position sensor
--	SIG HITCH DEPTH POS	Signal hitch depth position sensor
--	SIG IMP1 LVR POS	Signal implement lever 1 position sensor

10.7.50.2 Auxiliary valve control levers

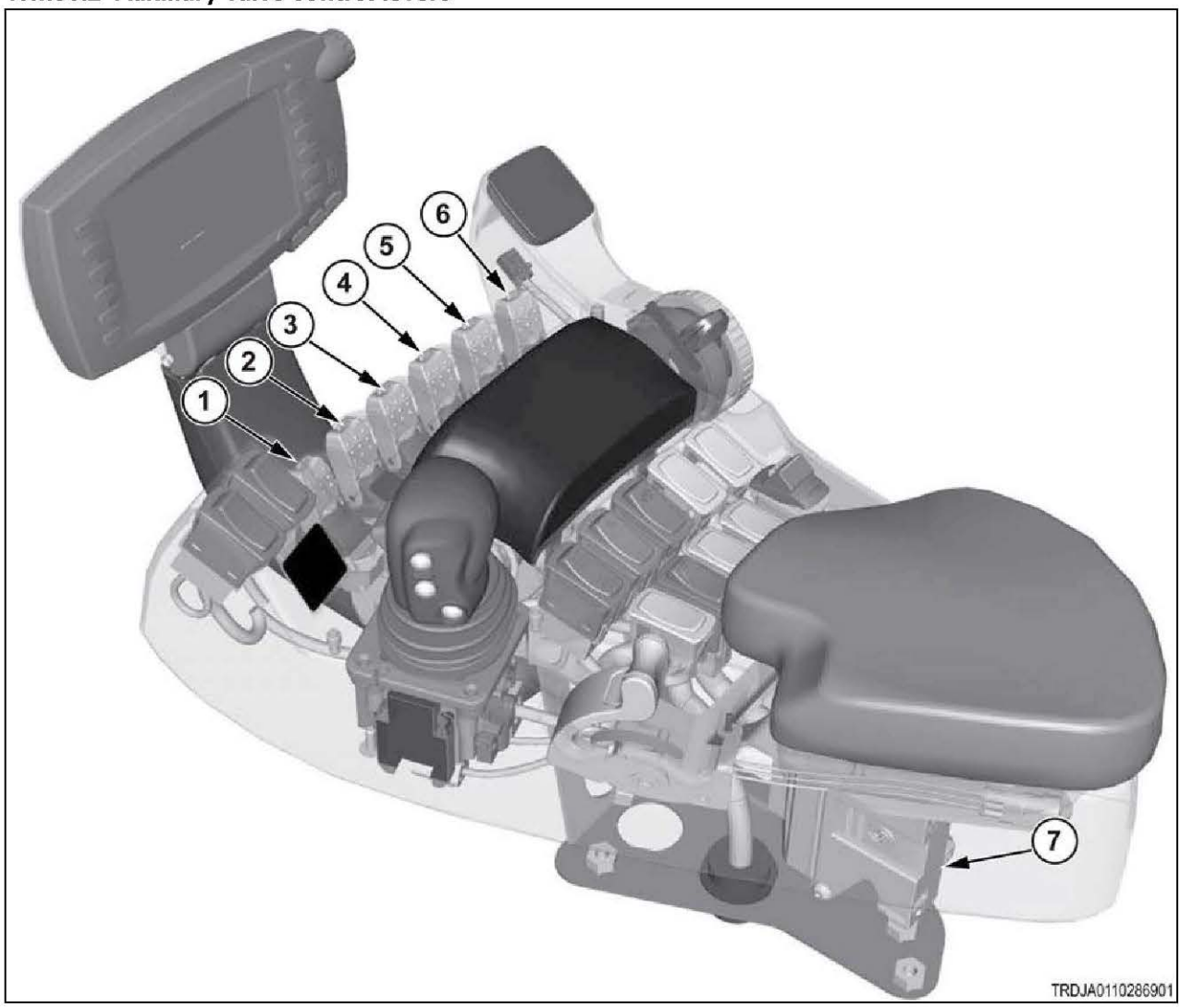

Fig. 389

(1)	Auxiliary valve 1 lever
(2)	Auxiliary valve 2 lever
(3)	Auxiliary valve 3 lever
(4)	Auxiliary valve 4 lever

(5)	Auxiliary valve 5 lever
(6)	Auxiliary valve 6 lever
(7)	Armrest module

10.7.51 Code SA 05 SPN 2000 FMI 02

Communication with the engine module is not correct.

Diagnosis and solution

Check if the diagnostic code remains.

a) Inspect and clean the harness connector contacts.
b) Connect all the connectors.
c) Turn the battery disconnect switch to the on position.
d) Turn the key start switch to the on position.
e) Operate the machine at low idle.
f) Check if the diagnostic code remains.

Result

Expected result - the diagnostic code is not active.

Results:

- Yes - SPN 2000 FMI 02 is not active.

  Stop.
- No - SPN 2000 FMI 02 is active.

  Failure of the armrest module is possible but not common. Exit the procedure and do the procedure again. If the diagnostic code remains active, replace the module.

  Stop.

10.7.52 Code SA 5 SPN 2034 FMI 2

Diagnosis and solution

1. Check the terminators for the Auxiliary/Lighting CAN Bus network.

a) Turn the key start switch to the off position.
b) Turn the battery disconnect switch to the off position.
c) Check resistance of the terminator.

Result

Results: The terminator resistance is 120 ohms.

- Yes - the resistance of the terminator is 120 ohms.

  see step 2, page 10-734
- No - the resistance of the terminator is not 120 ohms.

  Replace terminator.

  see step 4, page 10-735

2. Check the voltage of the CAN low in the harness.

a) Turn the battery disconnect switch to the on position.
b) Turn the key start switch to the on position.
c) Check voltage of CAN low at armrest module connector contact 7.

Result

Results: The voltage is 2.4 volts.

- Yes - the voltage is 2.4 volts.

  see step 3, page 10-735
- No - the voltage is not 2.4 volts.

  Replace or repair the harness.

  see step 4, page 10-735

3. Check the voltage of the CAN high in the harness.
a) Turn the battery disconnect switch to the on position.
b) Turn the key start switch to the on position.
c) Check voltage of CAN high at the armrest module connector contact 6.

Result

Results: The voltage is 2.6 volts.

- Yes - the voltage is 2.6 volts.

  see step 4, page 10-735
- No - the voltage is not 2.6 volts.

  Replace or repair the harness.

  see step 4, page 10-735

4. Check if the diagnostic code remains.
a) Inspect and clean the harness connector contacts.
b) Connect all the connectors.
c) Turn the battery disconnect switch to the on position.
d) Turn the key start switch to the on position.
e) Operate the machine at low idle.
f) Check if the diagnostic code remains.

Result

Expected result - the diagnostic code is not active.

Results:

- Yes - SPN 2034 FMI 02 is not active.

  Stop.
- No - SPN 2034 FMI 02 is active.

  Failure of the armrest module is possible but not common. Exit the procedure and do the procedure again. If the diagnostic code remains active, replace the module.

  Stop.

10.7.53 Code SA 5 SPN 2161 FMI 2

Implement valve module 1 communication erratic, intermittent or incorrect.

The impliment valves at the rear of the machine each contain their own controller module that communicates with the armrest ECU via the auxiliary CAN Bus. This independant controller operates the proportional and directional valve solenoids based on commands from the armrest ECU. It also issues its own error codes when problems are detected with the solenoids.

This error indicates that the individual valve controller is not communicating properly with the armrest module.

Diagnosis and solution

1. Check if additional implement valve communication errors are reported.

a) Turn the key start switch to the on position.

b) Briefly operate each of the available impliment control levers, and observe whether any related error codes are generated.

Result

- No other error codes are reported.

  The CAN Bus between the armrest ECU and the rear hitch is not suspect.

  Focus further examination at the connections immediately surrounding the valve module.

  See step 3 to check for poor connections.
- One or more valve modules report a similar error.

  Focus further examination on connections leading to the armrest ECU.

  First, see step 2 to check the terminating resistor.

2. Check the terminating resistor for the Auxiliary CAN Bus network.

a) Turn the key start switch to the off position.

b) Turn the battery disconnect switch to the off position.

c) Disconnect the terminating resistor (3-wire plug located near the impliment valves).

d) Check resistance between contacts A and B of the terminator.

Result

- The resistance is at or near 120 ohms.

  See step 3 to check for poor connections.
- The resistance is not near 120 ohms.

  Replace the terminator.

  See step 4 to validate the repair.

3. Inspect all harness connections.

a) Turn the key start switch to the off position.

b) Inspect and clean all connectors and connector contacts:

- Look for bent or worn pins.
- Look for deformed or oversized sockets.
- Look for corrosion on the pins and sockets. Corrosion is a sign of a loose connection.
- Look for signs of overheating. Overheating is a sign of a poor connection, and can further loosen the pin or socket mount. The whole connector body should be replaced.

c) Make sure to inspect the circuits identified in step 1 as they pass through the following connector locations:

- Connectors C7 through C12 at the valve modules.
- Chassis harness to cab harness connector (C33 & C65A).
- Cab harness to armrest harness connector (C19 & C1).
- Armrest module C24 connector.

d) Repair or replace any connector or harness found faulty.

e) See step 4 to verify repairs.

4. Check if the diagnostic code remains.

a) Inspect and clean the harness connector contacts.

b) Connect all the connectors.

c) Turn the battery disconnect switch to the on position.

d) Turn the key start switch to the on position.

e) Operate the machine at low idle.
f) Check if the diagnostic code remains.

Result

- SPN 2161 FMI 02 is not active.

  Stop.
- SPN 2161 FMI 02 is active.

  Failure of the armrest module is possible but not common. Exit the procedure and do the procedure again. If the diagnostic code remains active, replace the module.

  Stop.

10.7.54 Code SA 5 SPN 2162 FMI 2

Implement valve module 2 communication erratic, intermittent or incorrect.

The impliment valves at the rear of the machine each contain their own controller module that communicates with the armrest ECU via the auxiliary CAN Bus. This independant controller operates the proportional and directional valve solenoids based on commands from the armrest ECU. It also issues its own error codes when problems are detected with the solenoids.

This error indicates that the individual valve controller is not communicating properly with the armrest module.

Diagnosis and solution

1. Check if additional implement valve communication errors are reported.
a) Turn the key start switch to the on position.
b) Briefly operate each of the available impliment control levers, and observe whether any related error codes are generated.

Result

- No other error codes are reported.

  The CAN Bus between the armrest ECU and the rear hitch is not suspect.

  Focus further examination at the connections immediately surrounding the valve module.

  See step 3 to check for poor connections.
- One or more valve modules report a similar error.

  Focus further examination on connections leading to the armrest ECU.

  First, see step 2 to check the terminating resistor.

2. Check the terminating resistor for the Auxiliary CAN Bus network.
a) Turn the key start switch to the off position.
b) Turn the battery disconnect switch to the off position.
c) Disconnect the terminating resistor (3-wire plug located near the impliment valves).
d) Check resistance between contacts A and B of the terminator.

Result

- The resistance is at or near 120 ohms.

  See step 3 to check for poor connections.
- The resistance is not near 120 ohms.

  Replace the terminator.

  See step 4 to validate the repair.

3. Inspect all harness connections.

a) Turn the key start switch to the off position.
b) Inspect and clean all connectors and connector contacts:

- Look for bent or worn pins.
- Look for deformed or oversized sockets.
- Look for corrosion on the pins and sockets. Corrosion is a sign of a loose connection.
- Look for signs of overheating. Overheating is a sign of a poor connection, and can further loosen the pin or socket mount. The whole connector body should be replaced.

c) Make sure to inspect the circuits identified in step 1 as they pass through the following connector locations:

- Connectors C7 through C12 at the valve modules.
- Chassis harness to cab harness connector (C33 & C65A).
- Cab harness to armrest harness connector (C19 & C1).
- Armrest module C24 connector.

d) Repair or replace any connector or harness found faulty.
e) See step 4 to verify repairs.

4. Check if the diagnostic code remains.
a) Inspect and clean the harness connector contacts.
b) Connect all the connectors.
c) Turn the battery disconnect switch to the on position.
d) Turn the key start switch to the on position.
e) Operate the machine at low idle.
f) Check if the diagnostic code remains.

Result

- SPN 2162 FMI 02 is not active.

  Stop.
- SPN 2162 FMI 02 is active.

  Failure of the armrest module is possible but not common. Exit the procedure and do the procedure again. If the diagnostic code remains active, replace the module.

  Stop.

10.7.55 Code SA 05 SPN 2163 FMI 02

Implement valve module 3 communication erratic, intermittent or incorrect.

The impliment valves at the rear of the machine each contain their own controller module that communicates with the armrest ECU via the auxiliary CAN Bus. This independant controller operates the proportional and directional valve solenoids based on commands from the armrest ECU. It also issues its own error codes when problems are detected with the solenoids.

This error indicates that the individual valve controller is not communicating properly with the armrest module.

Diagnosis and solution

1. Check if additional implement valve communication errors are reported.
a) Turn the key start switch to the on position.
b) Briefly operate each of the available impliment control levers, and observe whether any related error codes are generated.

Result

- No other error codes are reported.

  The CAN Bus between the armrest ECU and the rear hitch is not suspect.

  Focus further examination at the connections immediately surrounding the valve module.

  See step 3 to check for poor connections.
- One or more valve modules report a similar error.

  Focus further examination on connections leading to the armrest ECU.

  First, see step 2 to check the terminating resistor.

2. Check the terminating resistor for the Auxiliary CAN Bus network.

a) Turn the key start switch to the off position.
b) Turn the battery disconnect switch to the off position.
c) Disconnect the terminating resistor (3-wire plug located near the impliment valves).
d) Check resistance between contacts A and B of the terminator.

Result

- The resistance is at or near 120 ohms.

  See step 3 to check for poor connections.
- The resistance is not near 120 ohms.

  Replace the terminator.

  See step 4 to validate the repair.

3. Inspect all harness connections.

a) Turn the key start switch to the off position.
b) Inspect and clean all connectors and connector contacts:

   - Look for bent or worn pins.
   - Look for deformed or oversized sockets.
   - Look for corrosion on the pins and sockets. Corrosion is a sign of a loose connection.
   - Look for signs of overheating. Overheating is a sign of a poor connection, and can further loosen the pin or socket mount. The whole connector body should be replaced.

c) Make sure to inspect the circuits identified in step 1 as they pass through the following connector locations:

   - Connectors C7 through C12 at the valve modules.
   - Chassis harness to cab harness connector (C33 & C65A).
   - Cab harness to armrest harness connector (C19 & C1).
   - Armrest module C24 connector.

d) Repair or replace any connector or harness found faulty.
e) See step 4 to verify repairs.

4. Check if the diagnostic code remains.

a) Inspect and clean the harness connector contacts.
b) Connect all the connectors.
c) Turn the battery disconnect switch to the on position.
d) Turn the key start switch to the on position.
e) Operate the machine at low idle.
f) Check if the diagnostic code remains.

Result

- SPN 2163 FMI 02 is not active.

  Stop.

- SPN 2163 FMI 02 is active.

  Failure of the armrest module is possible but not common. Exit the procedure and do the procedure again. If the diagnostic code remains active, replace the module.

  Stop.

10.7.56 Code SA 05 SPN 2164 FMI 02

Implement valve module 4 communication erratic, intermittent or incorrect.

The impliment valves at the rear of the machine each contain their own controller module that communicates with the armrest ECU via the auxiliary CAN Bus. This independant controller operates the proportional and directional valve solenoids based on commands from the armrest ECU. It also issues its own error codes when problems are detected with the solenoids.

This error indicates that the individual valve controller is not communicating properly with the armrest module.

Diagnosis and solution

1. Check if additional implement valve communication errors are reported.
   a) Turn the key start switch to the on position.
   b) Briefly operate each of the available impliment control levers, and observe whether any related error codes are generated.

   Result

   - No other error codes are reported.

     The CAN Bus between the armrest ECU and the rear hitch is not suspect.

     Focus further examination at the connections immediately surrounding the valve module.

     See step 3 to check for poor connections.
   - One or more valve modules report a similar error.

     Focus further examination on connections leading to the armrest ECU.

     First, see step 2 to check the terminating resistor.

2. Check the terminating resistor for the Auxiliary CAN Bus network.
   a) Turn the key start switch to the off position.
   b) Turn the battery disconnect switch to the off position.
   c) Disconnect the terminating resistor (3-wire plug located near the impliment valves).
   d) Check resistance between contacts A and B of the terminator.

   Result

   - The resistance is at or near 120 ohms.

     See step 3 to check for poor connections.
   - The resistance is not near 120 ohms.

     Replace the terminator.

     See step 4 to validate the repair.

3. Inspect all harness connections.
   a) Turn the key start switch to the off position.
   b) Inspect and clean all connectors and connector contacts:

      - Look for bent or worn pins.
      - Look for deformed or oversized sockets.
      - Look for corrosion on the pins and sockets. Corrosion is a sign of a loose connection.

- Look for signs of overheating. Overheating is a sign of a poor connection, and can further loosen the pin or socket mount. The whole connector body should be replaced.

c) Make sure to inspect the circuits identified in step 1 as they pass through the following connector locations:

- Connectors C7 through C12 at the valve modules.
- Chassis harness to cab harness connector (C33 & C65A).
- Cab harness to armrest harness connector (C19 & C1).
- Armrest module C24 connector.

d) Repair or replace any connector or harness found faulty.

e) See step 4 to verify repairs.

4. Check if the diagnostic code remains.

a) Inspect and clean the harness connector contacts.

b) Connect all the connectors.

c) Turn the battery disconnect switch to the on position.

d) Turn the key start switch to the on position.

e) Operate the machine at low idle.

f) Check if the diagnostic code remains.

Result

- SPN 2164 FMI 02 is not active.

  Stop.
- SPN 2164 FMI 02 is active.

  Failure of the armrest module is possible but not common. Exit the procedure and do the procedure again. If the diagnostic code remains active, replace the module.

  Stop.

10.7.57 Code SA 05 SPN 2165 FMI 02

Implement valve module 5 communication erratic, intermittent or incorrect.

The impliment valves at the rear of the machine each contain their own controller module that communicates with the armrest ECU via the auxiliary CAN Bus. This independant controller operates the proportional and directional valve solenoids based on commands from the armrest ECU. It also issues its own error codes when problems are detected with the solenoids.

This error indicates that the individual valve controller is not communicating properly with the armrest module.

Diagnosis and solution

1. Check if additional implement valve communication errors are reported.

a) Turn the key start switch to the on position.

b) Briefly operate each of the available impliment control levers, and observe whether any related error codes are generated.

Result

- No other error codes are reported.

  The CAN Bus between the armrest ECU and the rear hitch is not suspect.

  Focus further examination at the connections immediately surrounding the valve module.

  See step 3 to check for poor connections.

- One or more valve modules report a similar error.

  Focus further examination on connections leading to the armrest ECU.

  First, see step 2 to check the terminating resistor.

2. Check the terminating resistor for the Auxiliary CAN Bus network.

a) Turn the key start switch to the off position.
b) Turn the battery disconnect switch to the off position.
c) Disconnect the terminating resistor (3-wire plug located near the impliment valves).
d) Check resistance between contacts A and B of the terminator.

Result

- The resistance is at or near 120 ohms.

  See step 3 to check for poor connections.
- The resistance is not near 120 ohms.

  Replace the terminator.

  See step 4 to validate the repair.

3. Inspect all harness connections.

a) Turn the key start switch to the off position.
b) Inspect and clean all connectors and connector contacts:

- Look for bent or worn pins.
- Look for deformed or oversized sockets.
- Look for corrosion on the pins and sockets. Corrosion is a sign of a loose connection.
- Look for signs of overheating. Overheating is a sign of a poor connection, and can further loosen the pin or socket mount. The whole connector body should be replaced.

c) Make sure to inspect the circuits identified in step 1 as they pass through the following connector locations:

- Connectors C7 through C12 at the valve modules.
- Chassis harness to cab harness connector (C33 & C65A).
- Cab harness to armrest harness connector (C19 & C1).
- Armrest module C24 connector.

d) Repair or replace any connector or harness found faulty.
e) See step 4 to verify repairs.

4. Check if the diagnostic code remains.

a) Inspect and clean the harness connector contacts.
b) Connect all the connectors.
c) Turn the battery disconnect switch to the on position.
d) Turn the key start switch to the on position.
e) Operate the machine at low idle.
f) Check if the diagnostic code remains.

Result

- SPN 2165 FMI 02 is not active.

  Stop.
- SPN 2165 FMI 02 is active.

  Failure of the armrest module is possible but not common. Exit the procedure and do the procedure again. If the diagnostic code remains active, replace the module.

  Stop.

10.7.58 Code SA 05 SPN 2166 FMI 02

Implement valve module 6 communication erratic, intermittent or incorrect.

The impliment valves at the rear of the machine each contain their own controller module that communicates with the armrest ECU via the auxiliary CAN Bus. This independant controller operates the proportional and directional valve solenoids based on commands from the armrest ECU. It also issues its own error codes when problems are detected with the solenoids.

This error indicates that the individual valve controller is not communicating properly with the armrest module.

Diagnosis and solution

1. Check if additional implement valve communication errors are reported.

a) Turn the key start switch to the on position.

b) Briefly operate each of the available impliment control levers, and observe whether any related error codes are generated.

Result

- No other error codes are reported.

  The CAN Bus between the armrest ECU and the rear hitch is not suspect.

  Focus further examination at the connections immediately surrounding the valve module.

  See step 3 to check for poor connections.
- One or more valve modules report a similar error.

  Focus further examination on connections leading to the armrest ECU.

  First, see step 2 to check the terminating resistor.

2. Check the terminating resistor for the Auxiliary CAN Bus network.

a) Turn the key start switch to the off position.

b) Turn the battery disconnect switch to the off position.

c) Disconnect the terminating resistor (3-wire plug located near the impliment valves).

d) Check resistance between contacts A and B of the terminator.

Result

- The resistance is at or near 120 ohms.

  See step 3 to check for poor connections.
- The resistance is not near 120 ohms.

  Replace the terminator.

  See step 4 to validate the repair.

3. Inspect all harness connections.

a) Turn the key start switch to the off position.

b) Inspect and clean all connectors and connector contacts:

- Look for bent or worn pins.
- Look for deformed or oversized sockets.
- Look for corrosion on the pins and sockets. Corrosion is a sign of a loose connection.
- Look for signs of overheating. Overheating is a sign of a poor connection, and can further loosen the pin or socket mount. The whole connector body should be replaced.

c) Make sure to inspect the circuits identified in step 1 as they pass through the following connector locations:

- Connectors C7 through C12 at the valve modules.

- Chassis harness to cab harness connector (C33 & C65A).
- Cab harness to armrest harness connector (C19 & C1).
- Armrest module C24 connector.

d) Repair or replace any connector or harness found faulty.
e) See step 4 to verify repairs.

4. Check if the diagnostic code remains.
a) Inspect and clean the harness connector contacts.
b) Connect all the connectors.
c) Turn the battery disconnect switch to the on position.
d) Turn the key start switch to the on position.
e) Operate the machine at low idle.
f) Check if the diagnostic code remains.

Result

- SPN 2166 FMI 02 is not active.

  Stop.
- SPN 2166 FMI 02 is active.

  Failure of the armrest module is possible but not common. Exit the procedure and do the procedure again. If the diagnostic code remains active, replace the module.

  Stop.

10.7.59 Code SA 05 SPN 2825 FMI 00

The forward/neutral/reverse lever position sensor signal voltage is above normal.

This error is reported when the sensor data otherwise appears to be valid, but the data range exceeds 4.5 volts. The most likely cause is a faulty sensor.

Diagnosis and solution

1. Check the voltages at the sensor.
a) Open the armrest console to gain access to the sensor's harness connector.
b) Turn the key start switch to the on position, but do not start the engine.
c) Check the voltage between contacts 1 and 2 at the sensor connector.

The 12-volt fuse is known to be okay, because it also powers the armrest ECU itself, and this error could not be reported without power.

Result

- The voltage is not at or near 12 volts.

  Repair or replace the harness between the sensor and the armrest ECU.

  See step 2 to validate the repair.
- The voltage is at or near 12 volts.

  Continue.

d) Check the voltage between contacts 1 and 3 at the sensor connector while moving tthe lever through its full range of motion.

Result

The expected range is 0.5 to 4.5 volts.

- The voltage exceeds 4.5 volts.

  Replace the sensor.

  See step 2 to validate the repair.

- The voltage range is 0.5 to 4.5 volts.

  Inspect the sensor and ECU harness connectors for loose or corroded terminals

  See step 2 to check if the error persists.

2. Check if the diagnostic code remains.

a) Inspect and clean the harness connector contacts.
b) Connect all the connectors.
c) Turn the battery disconnect switch to the on position.
d) Turn the key start switch to the on position.
e) Operate the machine at low idle.
f) Check if the diagnostic code remains.

Result

- SPN 2825 FMI 00 is not active.

  Stop.
- SPN 2825 FMI 00 is active.

  Failure of the armrest module is possible but not common. Exit the procedure and do the procedure again. If the diagnostic code remains active, replace the module.

  Stop.

10.7.59.1 Transmission control lever electrical schematic

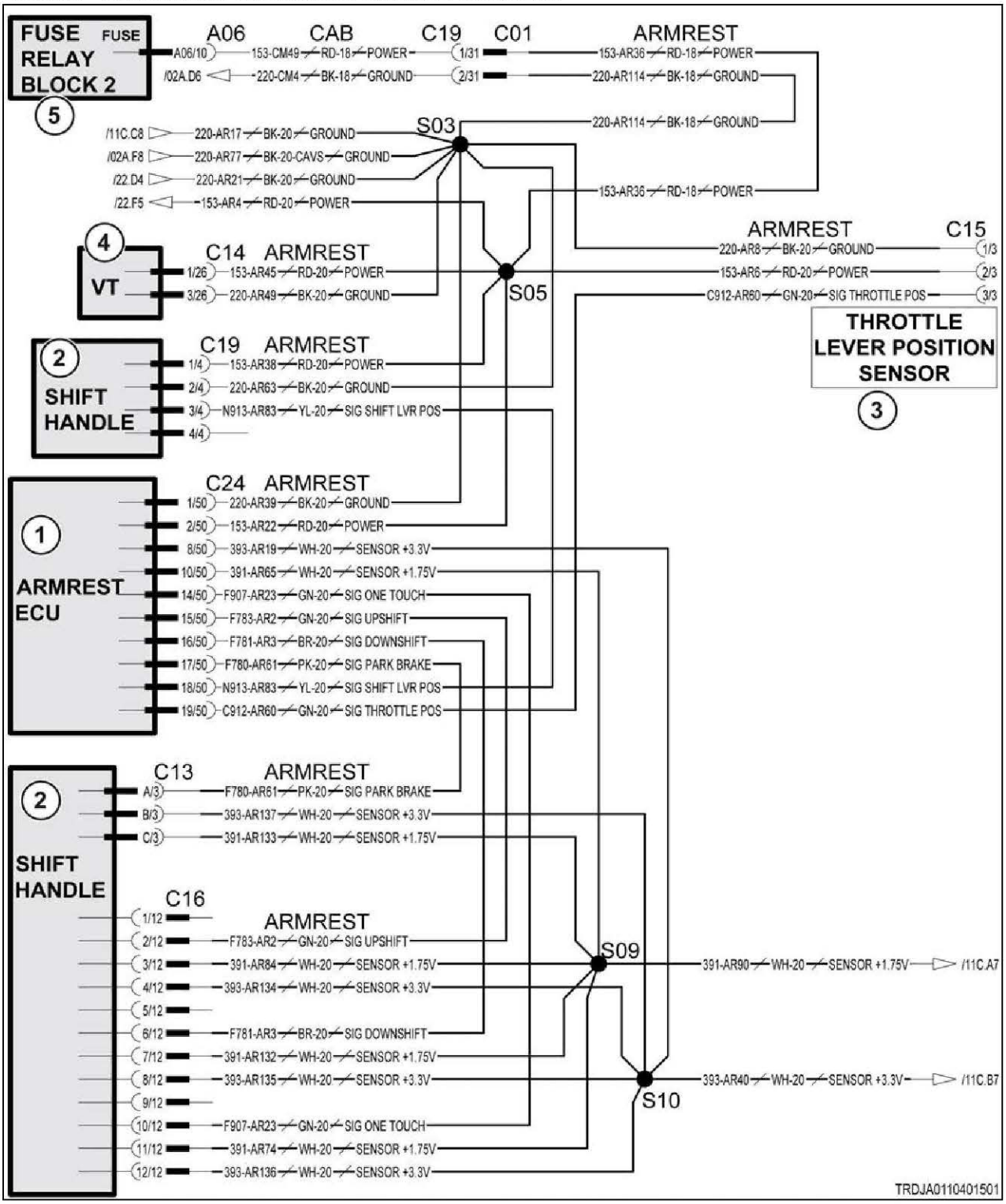

Fig. 390

Schematic legend		
Item	**Schematic term**	**Description**
1	ARMREST ECU	Armrest module
2	SHIFT HANDLE	Transmission control lever
3	THROTTLE LEVER POSITION SENSOR	Throttle lever position sensor
4	VT	Virtual terminal
5	FUSE RELAY BLOCK 2	Fuse relay block 2
--	SIG THROTTLE POS	Signal throttle position
--	SIG UPSHIFT	Signal upshift
--	SIG DOWNSHIFT	Signal downshift
--	SIG ONE TOUCH	Signal one touch
--	SIG PARK BRAKE	Signal park brake
--	SIG SHIFT LVR POSITION	Signal transmission control lever

1.7v and 3.3v schematics

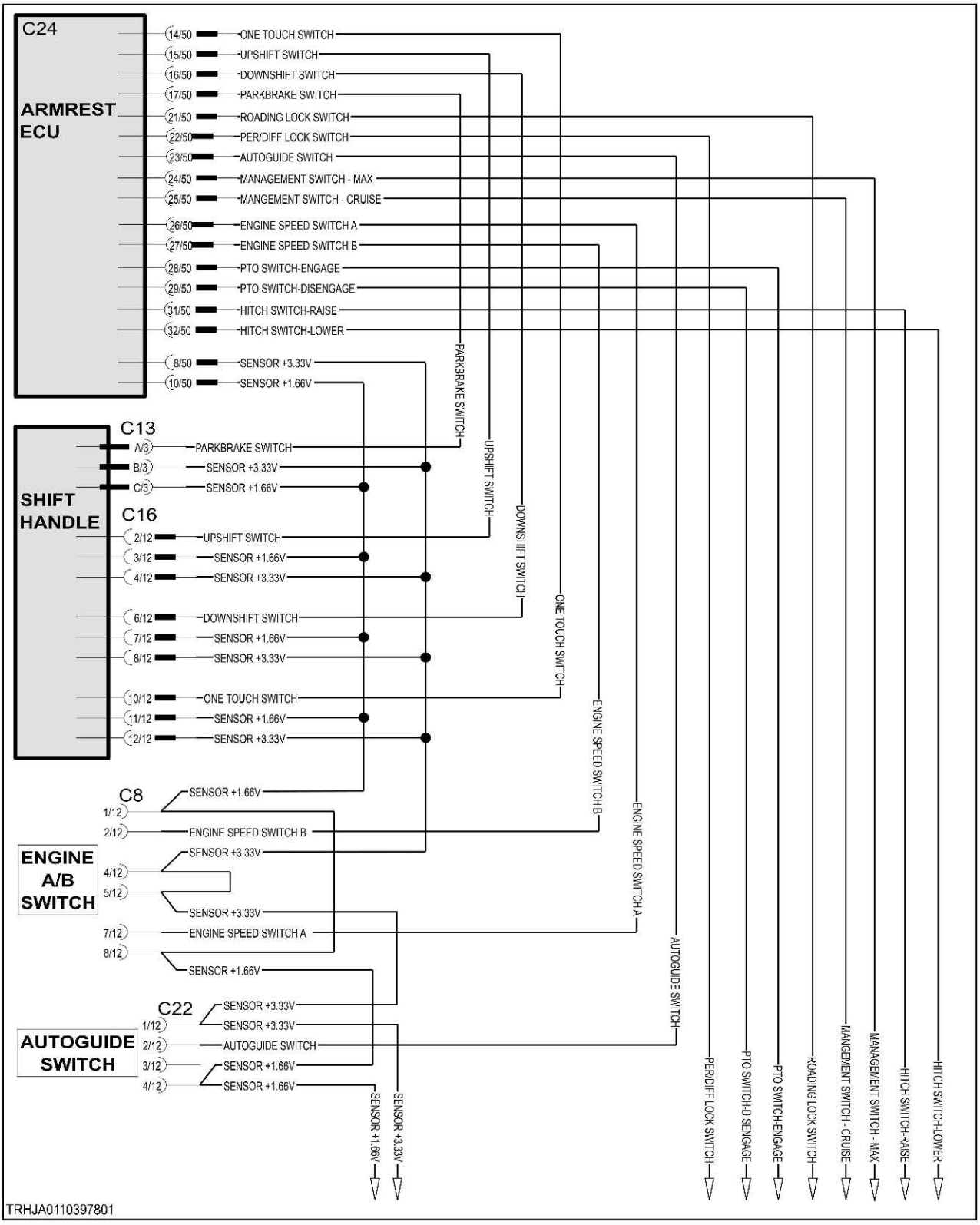

Fig. 391

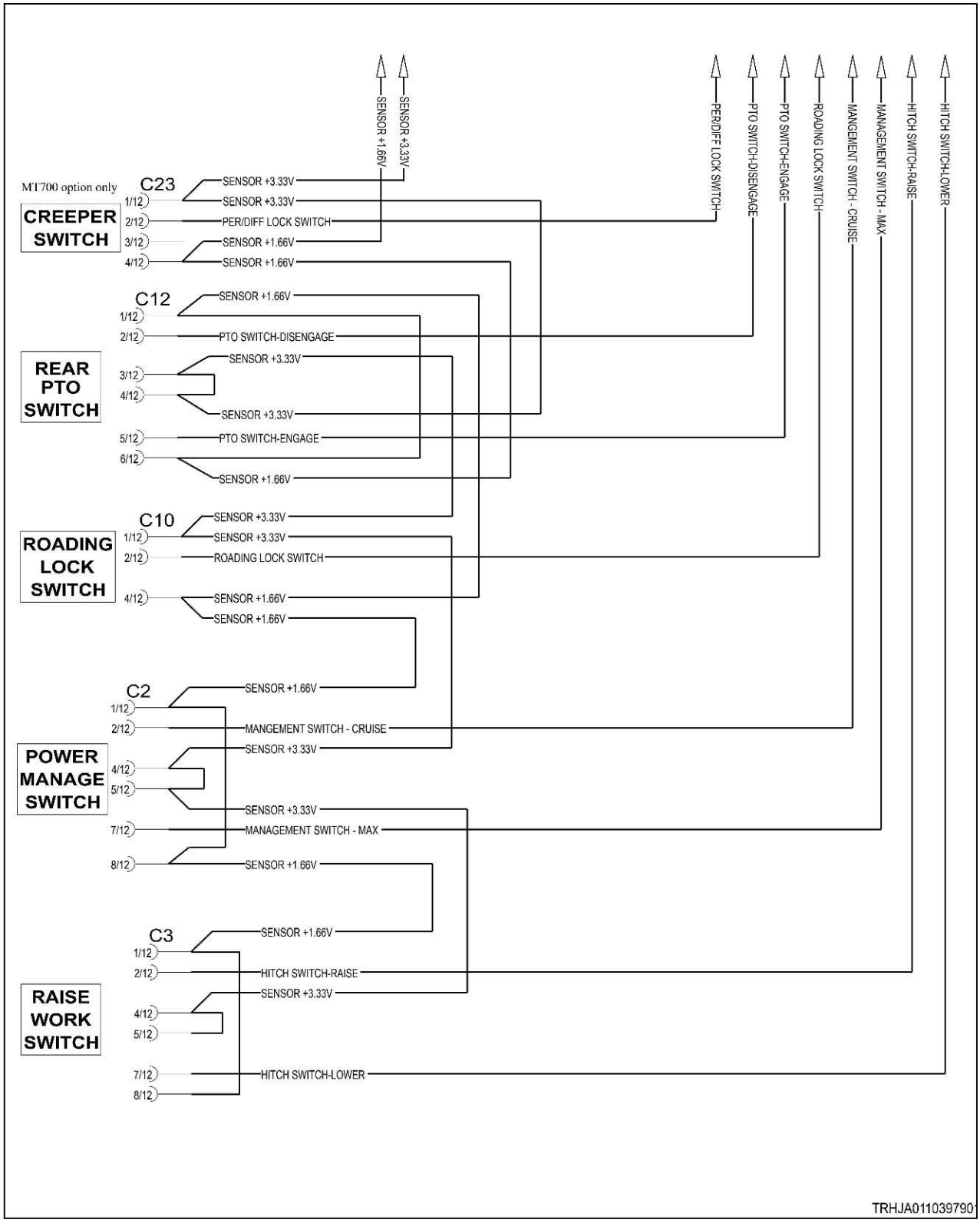
SENSOR +1.66V
SENSOR +3.33V
PER/DIFF LOCK SWITCH
PTO SWITCH-DISENGAGE
PTO SWITCH-ENGAGE
ROADING LOCK SWITCH
MANGEMENT SWITCH - CRUISE
MANAGEMENT SWITCH - MAX
HITCH SWITCH-RAISE
HITCH SWITCH-LOWER
MT700 option only
CREEPER SWITCH
C23
1/12 SENSOR +3.33V
SENSOR +3.33V
2/12 PER/DIFF LOCK SWITCH
3/12 SENSOR +1.66V
4/12 SENSOR +1.66V
C12
1/12 SENSOR +1.66V
2/12 PTO SWITCH-DISENGAGE
REAR PTO SWITCH
3/12 SENSOR +3.33V
4/12
SENSOR +3.33V
5/12 PTO SWITCH-ENGAGE
6/12
SENSOR +1.66V
C10
ROADING LOCK SWITCH
1/12 SENSOR +3.33V
SENSOR +3.33V
2/12 ROADING LOCK SWITCH
4/12 SENSOR +1.66V
SENSOR +1.66V
C2
1/12 SENSOR +1.66V
2/12 MANGEMENT SWITCH - CRUISE
POWER MANAGE SWITCH
SENSOR +3.33V
4/12
5/12
SENSOR +3.33V
7/12 MANAGEMENT SWITCH - MAX
8/12 SENSOR +1.66V
C3
SENSOR +1.66V
1/12
2/12 HITCH SWITCH-RAISE
SENSOR +3.33V
RAISE WORK SWITCH
4/12
5/12
7/12 HITCH SWITCH-LOWER
8/12
TRHJA011039790

Fig. 392

10.7.59.2 Transmission control lever



Fig. 393 Switch pinout

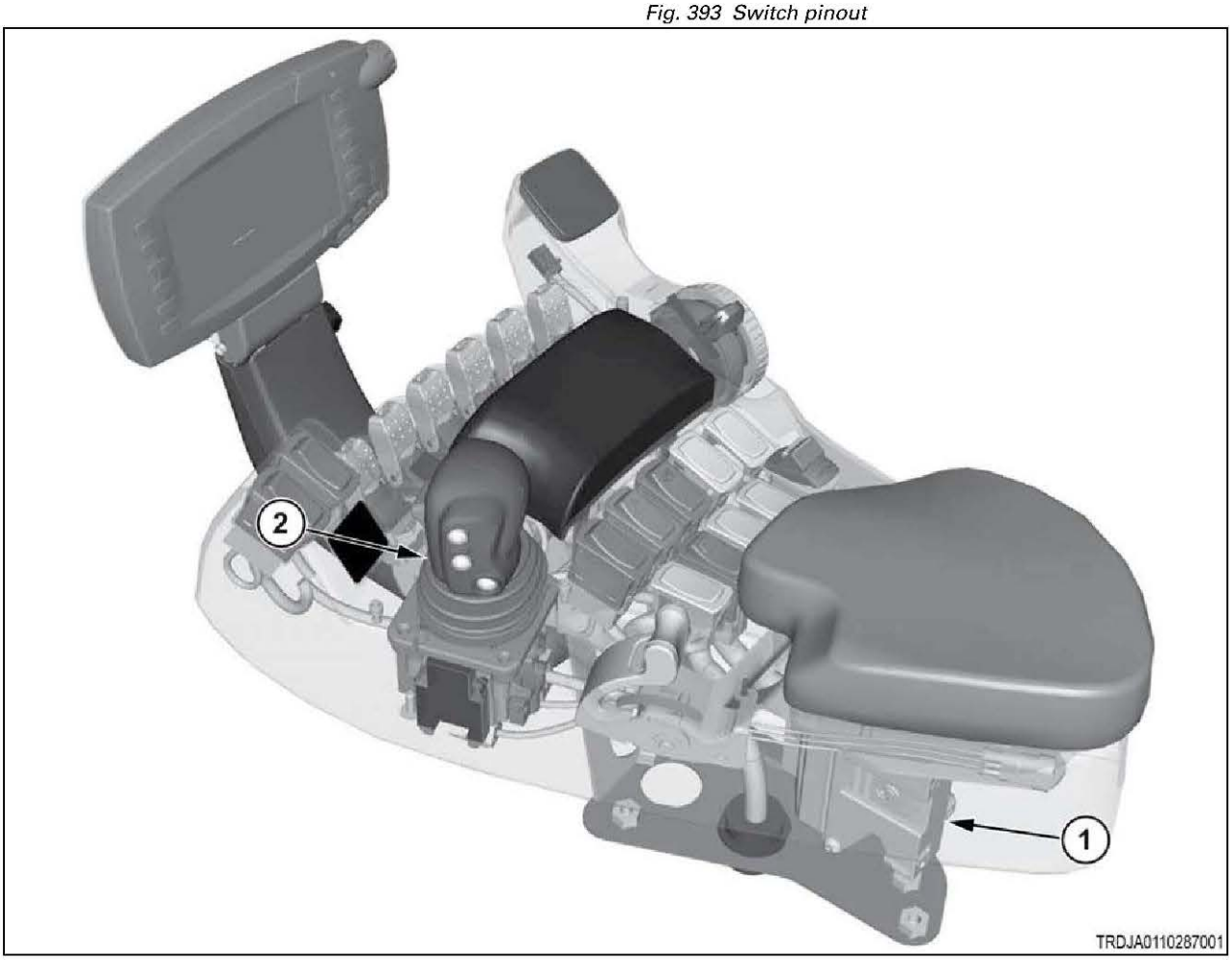

Fig. 394

(1)	Armrest module
(2)	Transmission control lever

10.7.60 Code SA 05 SPN 2825 FMI 01

The forward/neutral/reverse lever position sensor signal is below normal.

This error is reported when the sensor data otherwise appears to be valid, but the data range drops below 0.5 volts. The most likely cause is a faulty sensor.

Diagnosis and solution.

1. Check the voltages at the sensor.

a) Open the armrest console to gain access to the sensor's harness connector.

b) Turn the key start switch to the on position, but do not start the engine.

c) Check the voltage between contacts 1 and 2 at the sensor connector.

The 12-volt fuse is known to be okay, because it also powers the armrest ECU itself, and this error could not be reported without power.

Result

- The voltage is not at or near 12 volts.

  Repair or replace the harness between the sensor and the armrest ECU.

  See step 2 to validate the repair.
- The voltage is at or near 12 volts.

  Continue.

d) Check the voltage between contacts 1 and 3 at the sensor connector while moving tthe lever through its full range of motion.

Result

The expected range is 0.5 to 4.5 volts.

- The voltage exceeds 4.5 volts.

  Replace the sensor.

  See step 2 to validate the repair.
- The voltage range is 0.5 to 4.5 volts.

  Inspect the sensor and ECU harness connectors for loose or corroded terminals

  See step 2 to check if the error persists.

2. Check if the diagnostic code remains.

a) Inspect and clean the harness connector contacts.

b) Connect all the connectors.

c) Turn the battery disconnect switch to the on position.

d) Turn the key start switch to the on position.

e) Operate the machine at low idle.

f) Check if the diagnostic code remains.

Result

- SPN 2825 FMI 01 is not active.

  Stop.
- SPN 2825 FMI 01 is active.

  Failure of the armrest module is possible but not common. Exit the procedure and do the procedure again. If the diagnostic code remains active, replace the module.

  Stop.

10.7.60.1 Transmission control lever electrical schematic

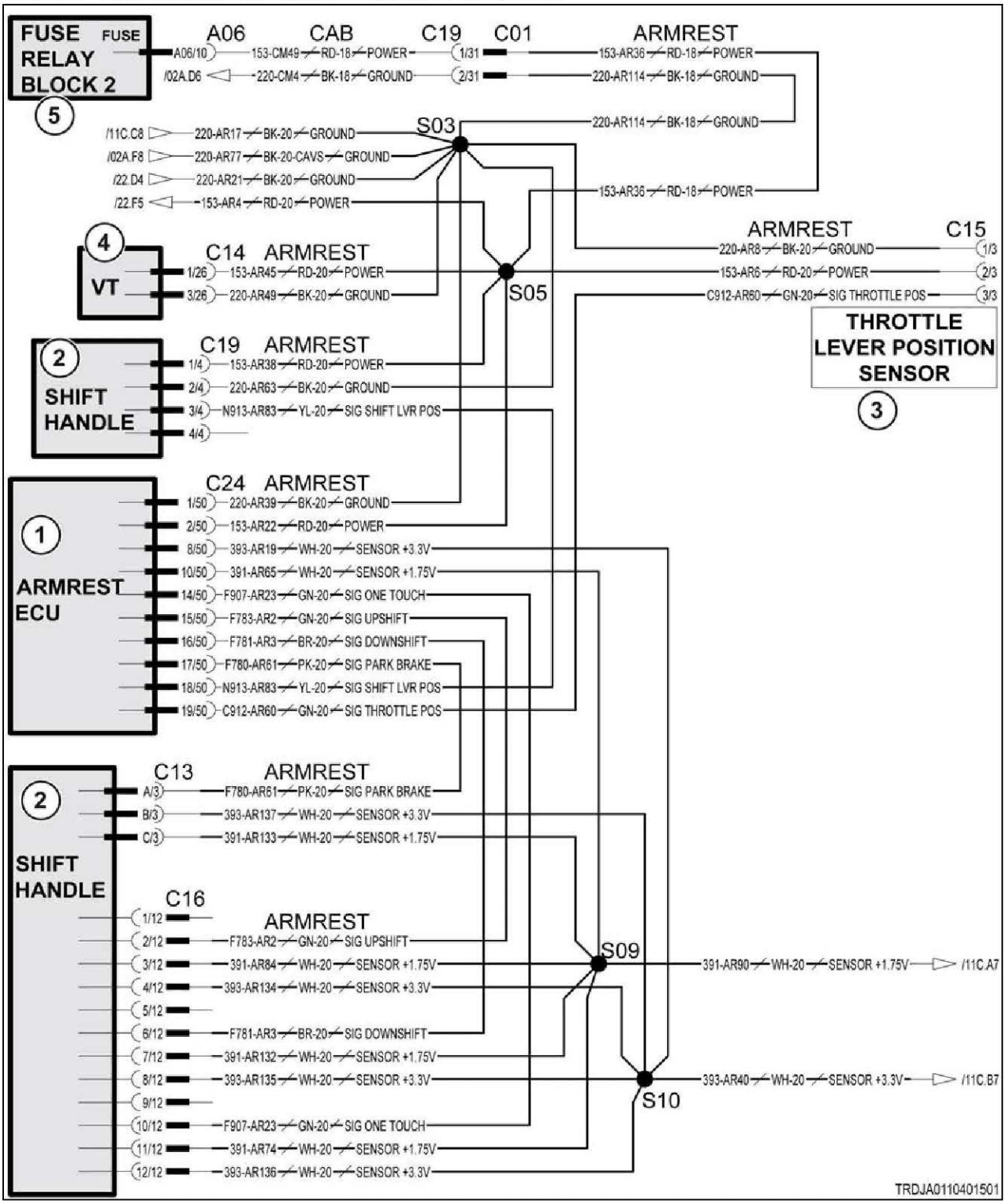

Fig. 395

Schematic legend		
Item	**Schematic term**	**Description**
1	ARMREST ECU	Armrest module
2	SHIFT HANDLE	Transmission control lever
3	THROTTLE LEVER POSITION SENSOR	Throttle lever position sensor
4	VT	Virtual terminal
5	FUSE RELAY BLOCK 2	Fuse relay block 2
--	SIG THROTTLE POS	Signal throttle position
--	SIG UPSHIFT	Signal upshift
--	SIG DOWNSHIFT	Signal downshift
--	SIG ONE TOUCH	Signal one touch
--	SIG PARK BRAKE	Signal park brake
--	SIG SHIFT LVR POSITION	Signal transmission control lever

1.7v and 3.3v schematics

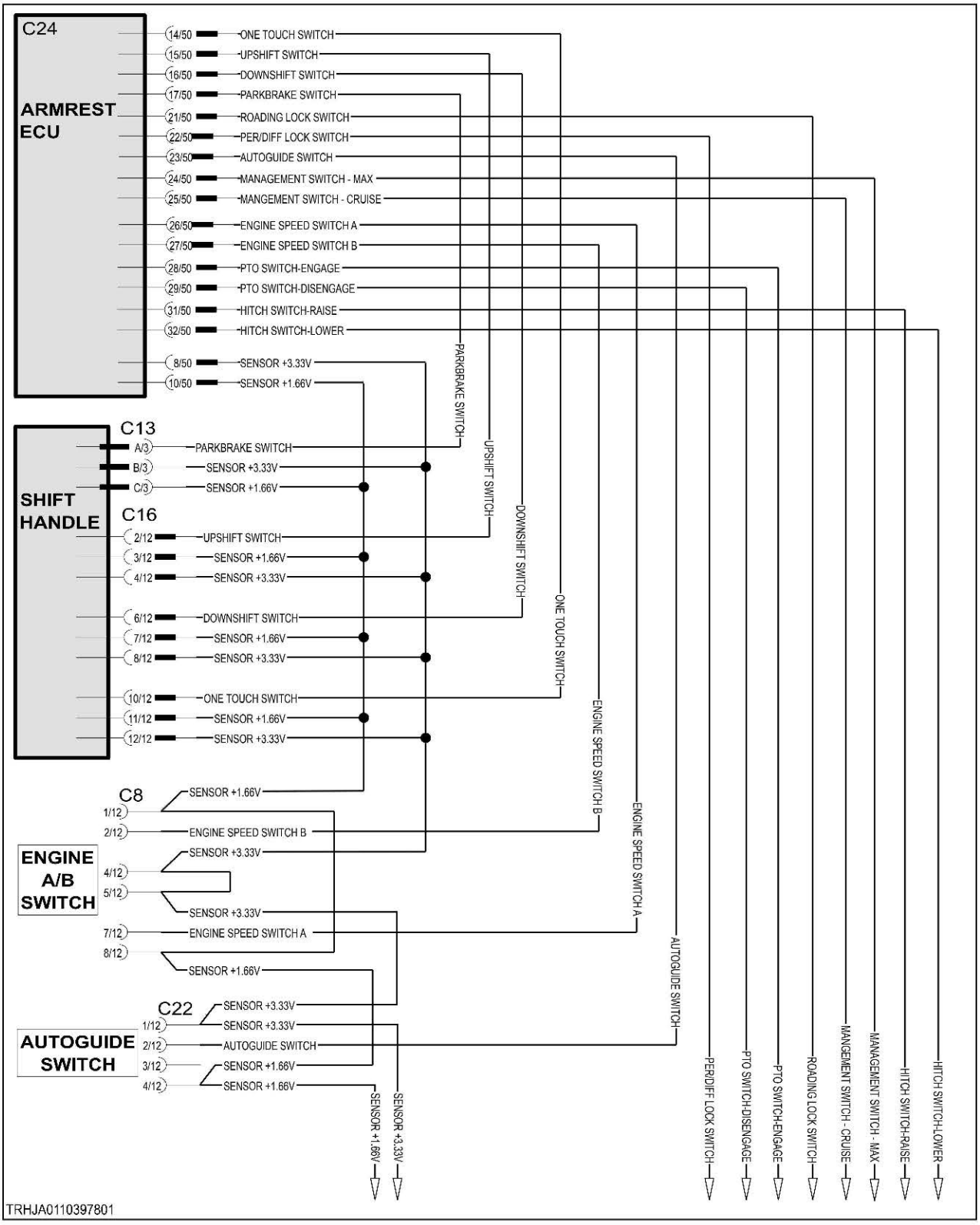

Fig. 396

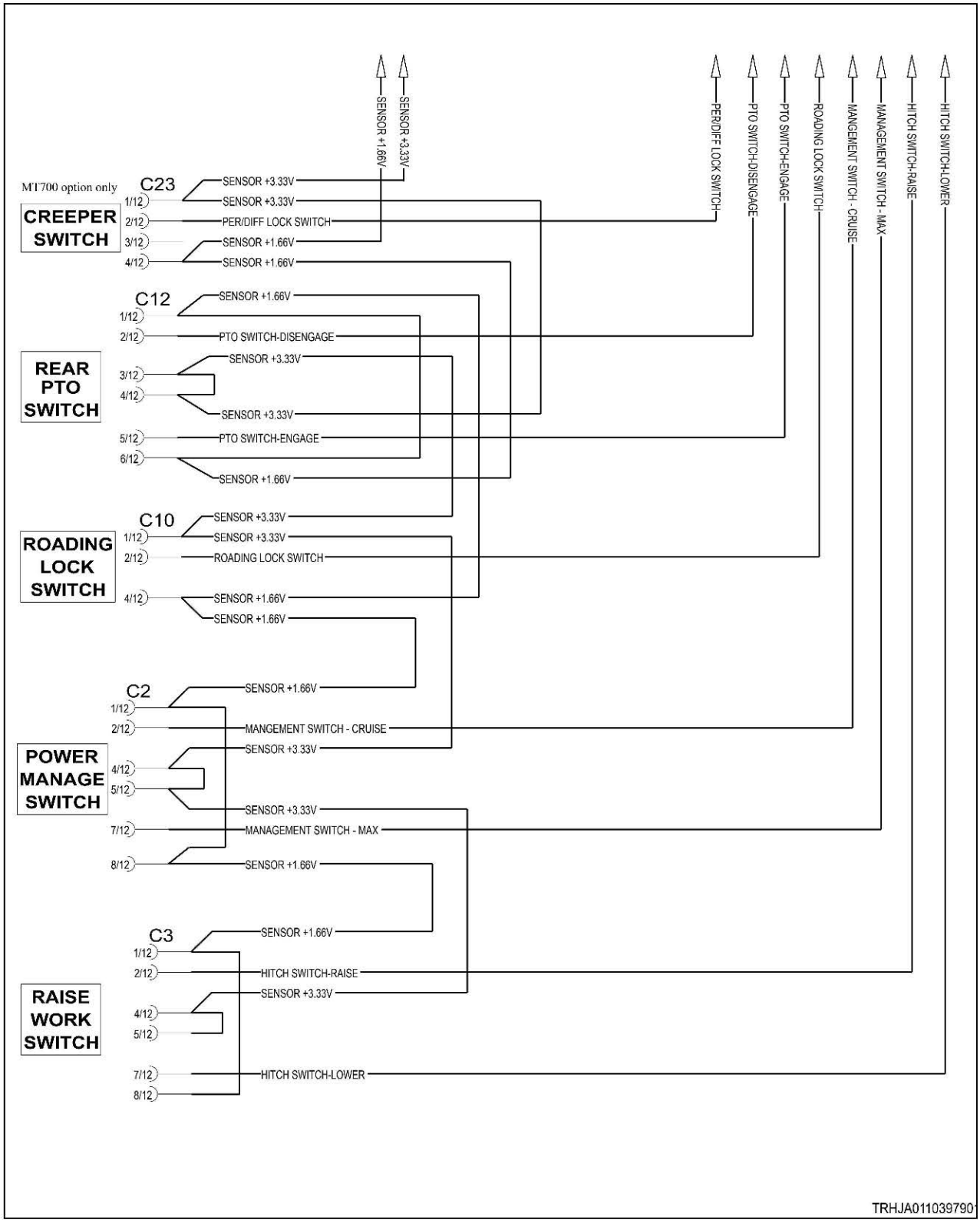
SENSOR +1.66V
SENSOR +3.33V
PER/DIFF LOCK SWITCH
PTO SWITCH-DISENGAGE
PTO SWITCH-ENGAGE
ROADING LOCK SWITCH
MANGEMENT SWITCH - CRUISE
MANAGEMENT SWITCH - MAX
HITCH SWITCH-RAISE
HITCH SWITCH-LOWER
MT700 option only
CREEPER SWITCH
C23
1/12 SENSOR +3.33V
SENSOR +3.33V
2/12 PER/DIFF LOCK SWITCH
3/12 SENSOR +1.66V
4/12 SENSOR +1.66V
C12
1/12 SENSOR +1.66V
2/12 PTO SWITCH-DISENGAGE
REAR PTO SWITCH
3/12 SENSOR +3.33V
4/12
SENSOR +3.33V
5/12 PTO SWITCH-ENGAGE
6/12
SENSOR +1.66V
C10
ROADING LOCK SWITCH
1/12 SENSOR +3.33V
SENSOR +3.33V
2/12 ROADING LOCK SWITCH
4/12 SENSOR +1.66V
SENSOR +1.66V
C2
1/12 SENSOR +1.66V
2/12 MANGEMENT SWITCH - CRUISE
POWER MANAGE SWITCH
SENSOR +3.33V
4/12
5/12
SENSOR +3.33V
7/12 MANAGEMENT SWITCH - MAX
8/12 SENSOR +1.66V
C3
SENSOR +1.66V
1/12
2/12 HITCH SWITCH-RAISE
SENSOR +3.33V
RAISE WORK SWITCH
4/12
5/12
7/12 HITCH SWITCH-LOWER
8/12
TRHJA011039790

Fig. 397

10.7.60.2 Transmission control lever



Fig. 398 Switch pinout

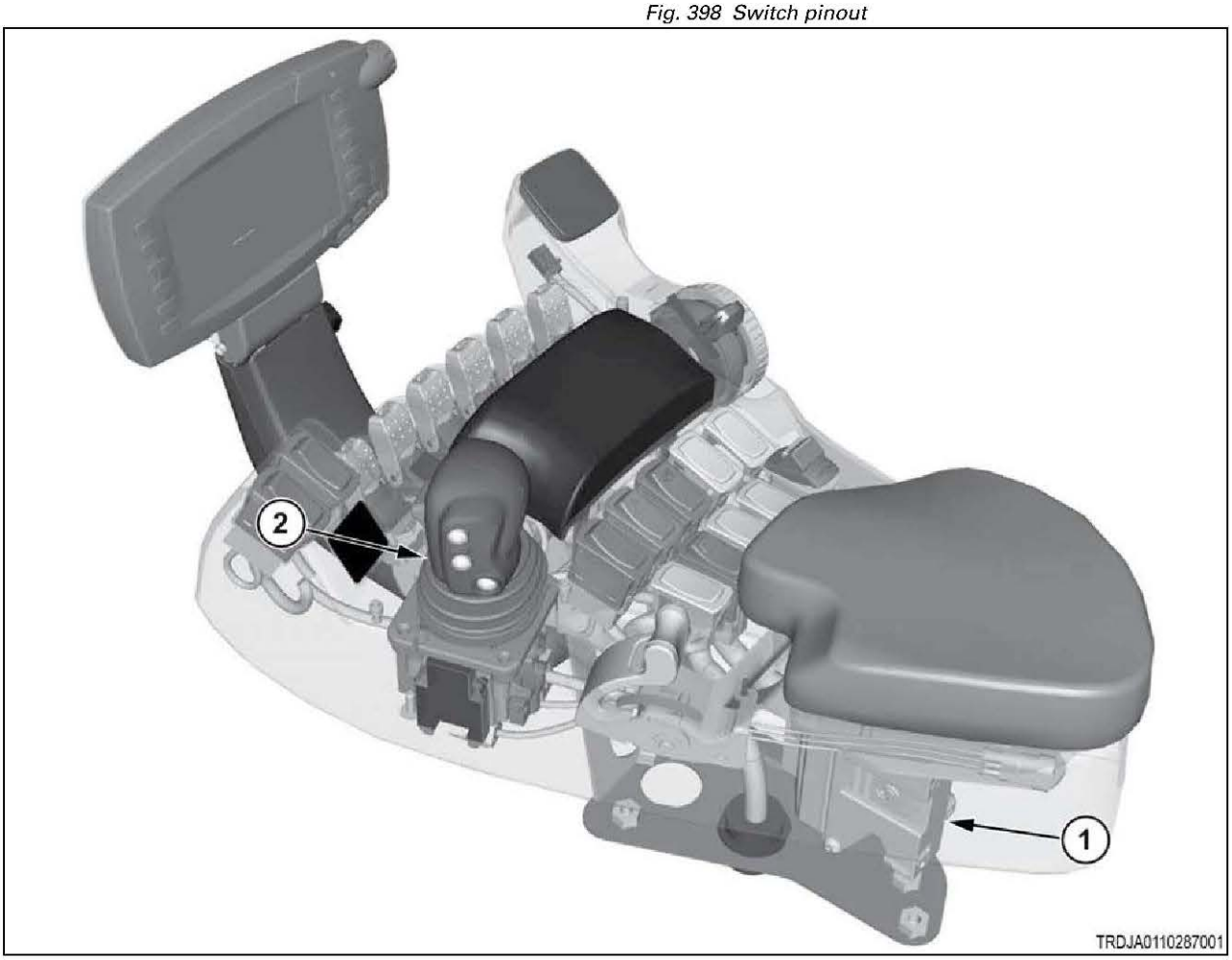

Fig. 399

(1)	Armrest module
(2)	Transmission control lever

10.7.61 Code SA 05 SPN 2832 FMI 31

The armrest module finds there is no operator present while the machine is operating.

Diagnosis and solution

1. Check for ground at the switch.
   a) Turn the key start switch to the off position.
   b) Turn the battery disconnect switch to the off position.
   c) Remove the key from the battery disconnect switch.
   d) Check resistance from seat sensor contact 6 to frame ground.

   Result

   Expected result - resistance is less than 5 ohms.

   Results:

   - Yes - resistance is less than 5 ohms.
   - No - resistance is not less than 5 ohms.

     Repair or replace the harness.

2. Check the switch harness for an open circuit.
   a) Turn the key start switch to the off position.
   b) Turn the battery disconnect switch to the off position.
   c) Remove the key from the battery disconnect switch.
   d) Disconnect the harness from the operator present switch.
   e) Disconnect the harness connectors from the armrest module.
   f) Check resistance between operator present switch contact 5 and armrest module contact 20.

   Result

   Expected result - resistance is less than 5 ohms.

   Results:

   - Yes - resistance is less than 5 ohms.
   - No - resistance is not less than 5 ohms.

     Repair or replace the harness.

3. Check the operation of the switch.
   a) Turn the key start switch to the off position.
   b) Turn the battery disconnect switch to the off position.
   c) Remove the key from the battery disconnect switch.
   d) Connect the harness to the operator present switch.
   e) Check resistance from seat sensor contact 5 to contact 6 with no one sitting in the seat.
   f) Check resistance from seat sensor contact 5 to contact 6 while a person sits in the seat.

   Result

   Expected results -

   With no one sitting in the seat, resistance is more than 5000 ohms.

   While person sits in the seat, resistance is less than 5 ohms.

   Results:

   - Yes - values are correct.
   - No - values are not correct.

     Replace the operator present switch.

4. Check if the diagnostic code remains.
   a) Inspect and clean the harness connector contacts.
   b) Connect all the connectors.
   c) Turn the battery disconnect switch to the on position.
   d) Turn the key start switch to the on position.
   e) Operate the machine at low idle.
   f) Check if the diagnostic code remains.

   Result

   Expected result - the diagnostic code is not active.

   Results:

   - Yes - SPN 2832 FMI 31 is not active.

     Stop.
   - No - SPN 2832 FMI 31 is active.

     Failure of the armrest module is possible but not common. Exit the procedure and do the procedure again. If the diagnostic code remains active, replace the module.

     Stop.

10.7.61.1 Switch group electrical schematic

Armrest switches

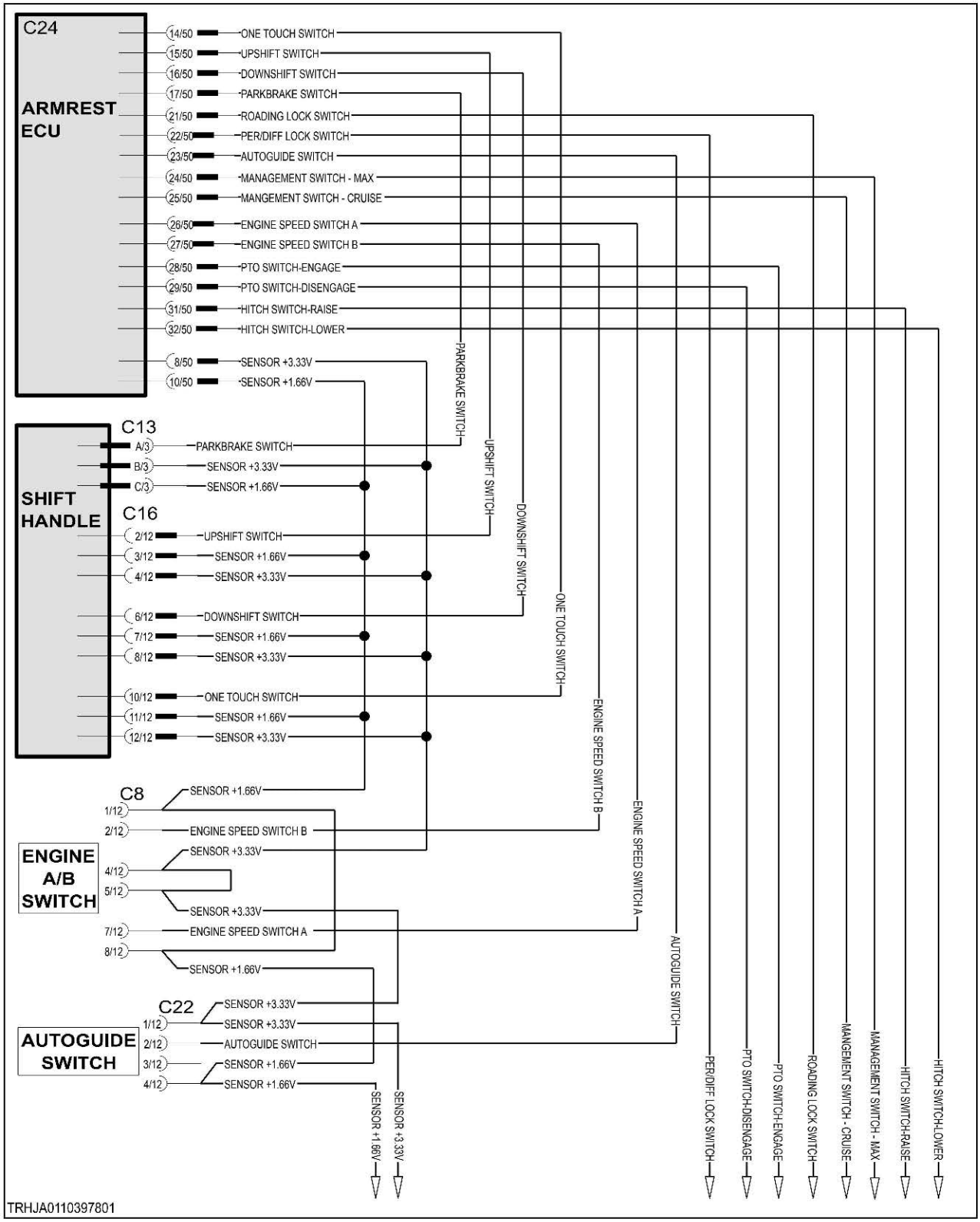

Fig. 400

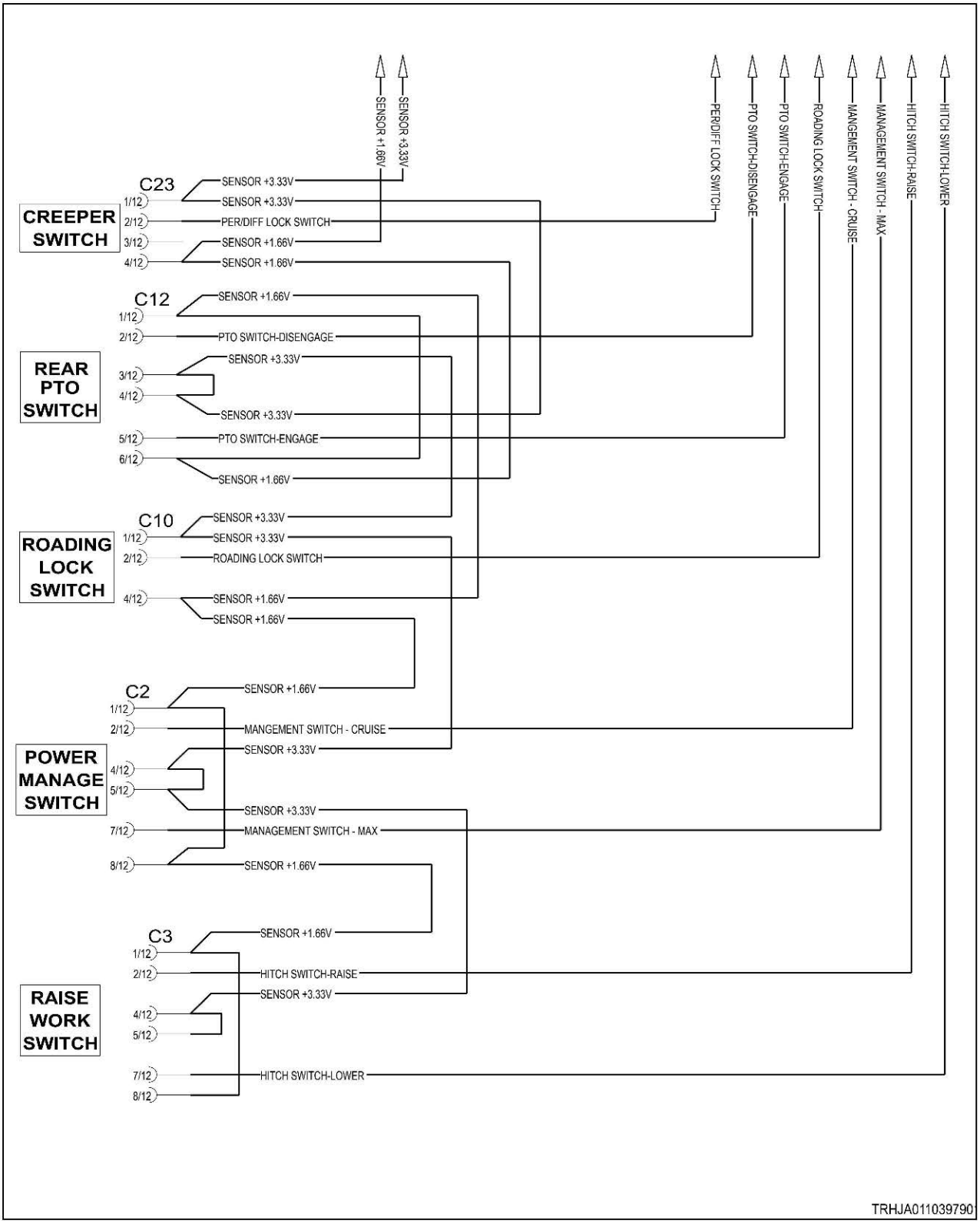

Fig. 401

10.7.62 Code SA 05 SPN 2858 FMI 02

The armrest module finds that the machine options and the machine configurations do not align.

Diagnosis and solution

1. Check the machine options and the machine configuration.

a) Connect the AGCO electronic diagnostic tool (EDT) to the service connector in the cab.
b) Turn the battery disconnect switch to the on position.
c) Turn the key start switch to the on position.
d) Use the AGCO EDT to make sure all the machine options and the machine configurations are correct.

Result

Expected result - all options and configurations are correct.

Results:

- Yes - all options and configurations are correct.
- No - one or more options or configurations are not correct.

  Change options or configurations.

2. Use the Caterpillar ET to check the machine configurations, options, and serial numbers.
a) Connect the Caterpillar ET to the service connector in the cab.
b) Turn the battery disconnect switch to the on position.
c) Turn the key start switch to the on position.
d) Check all the options, configurations, and the machine serial numbers.

Result

Expected result - all options, configurations, and serial numbers are correct.

Results:

- Yes - all options, configurations, and serial numbers are correct.
- No - machine options, configurations, or serial numbers are not correct.

  Change the options, configurations, or serial numbers.

3. Check if the diagnostic code remains.
a) Inspect and clean the harness connector contacts.
b) Connect all the connectors.
c) Turn the battery disconnect switch to the on position.
d) Turn the key start switch to the on position.
e) Operate the machine at low idle.
f) Check if the diagnostic code remains.

Result

Expected result - the diagnostic code is not active.

Results:

- Yes - SPN 2858 FMI 02 is not active.

  Stop.
- No - SPN 2858 FMI 02 is active.

  Failure of the armrest module is possible but not common. Exit the procedure and do the procedure again. If the diagnostic code remains active, replace the module.

  Stop.

10.7.63 Code SA 05 SPN 2970 FMI 02

The engine speed A/B switch signal is erratic, intermittent, or not correct.

The switch is a momentary double-pole, double-throw (DPDT) type switch, except the "common" terminal is the data output instead of a power source. The 4 other contacts are connected to 3.33-volt power and 1.66-volt power. Operating the switch selects one of these voltages for the signal output. These 2 power

circuits are shared by several other function switches on the armrest. This knowledge can aid in diagnosing the fault.

Diagnosis and solution

1. Check the function of upstream and downstream switches that share power circuits.

a) Turn the key start switch to the on position.
b) Operate the upshift and downshift buttons on the shift handle.
c) Operate the creeper switch in both directions.
d) Check for additional error codes.

Result

- SA 05 SPN 3652 FMI 02 or SA 05 SPN 3653 FMI 02 (shift) errors are reported.

  Focus further examination on the power circuits between the engine speed switch and the armrest controller.

  See step 2 to check for loose connections.
- SA 05 SPN 96 FMI 02 (creeper) is reported, but not a shift error.

  Focus further examination on the power circuits between the shift handle and the engine speed switch.

  See step 2 to check for loose connections.
- No additional error codes are reported.

  The power circuits are not suspect.

  Focus further examination on the switch signal output.

  See step 2 to check for loose connections.

2. Inspect all harness and switch connections.

a) Turn the key start switch to the off position.
b) Turn the battery disconnect switch to the off position.
c) Open the top of the armrest console.
d) Inspect and clean all connectors and connector contacts:

- Look for bent or worn pins.
- Look for deformed or oversized sockets.
- Look for corrosion on the pins and sockets. Corrosion is a sign of a loose connection.
- Look for signs of overheating. Overheating is a sign of a poor connection, and can further loosen the pin or socket mount. The whole connector body should be replaced.

e) Make sure to inspect the circuits identified in step 1 as they pass through the following connector locations:

- Switch signal at the armrest ECU C24-26 and C24-27.
- All contacts at the engine speed switch.
- The 1.66V and 3.33V power signals as they pass through the following switches:

  Engine A/B switch

  Shift Handle

  Armrest ECU C24-8 (3.33V) and C24-10 (1.66V)

f) Repair or replace any connector or harness found faulty.

Result

- No faulty contacts were found.

  See step 3 to check the switch function.

- Faulty contacts were found and repaired.

  See step 4 to validate the repair.

3. Check the switch function.

a) Disconnect the engine speed switch.

b) Check resistance between contacts 2 & 1 and 2 & 4, as you operate the switch from neutral, A, and B.

c) Check resistance between contacts 7 & 5 and 7 & 8, as you operate the switch from neutral, A, and B.

- In the neutral-position, contacts 2 & 4 and 7 & 5 should have continuity.
- In the A-position, contacts 7 & 8 should have continuity.
- In the B-position, contacts 2 & 1 should have continuity.

Result

- Continuity checks are correct.

  See step 4 to check if the error persists.
- Continuity checks are incorrect.

  Replace the switch.

  See step 4 to validate the repair.

4. Check if the fault code remains.

a) Inspect and clean the harness connector contacts.

b) Connect all the connectors.

c) Turn the battery disconnect switch to the on position.

d) Turn the key start switch to the on position.

e) Operate the machine at low idle.

f) Check if the fault code remains.

Result

- SPN 2970 FMI 02 is not active.

  Stop.
- SPN 2970 FMI 02 is active.

  Failure of the armrest module is possible but not common. Exit the procedure and do the procedure again. If the fault code remains active, replace the armrest module.

  Stop.

10.7.63.1 Engine speed switch A/B electrical schematic

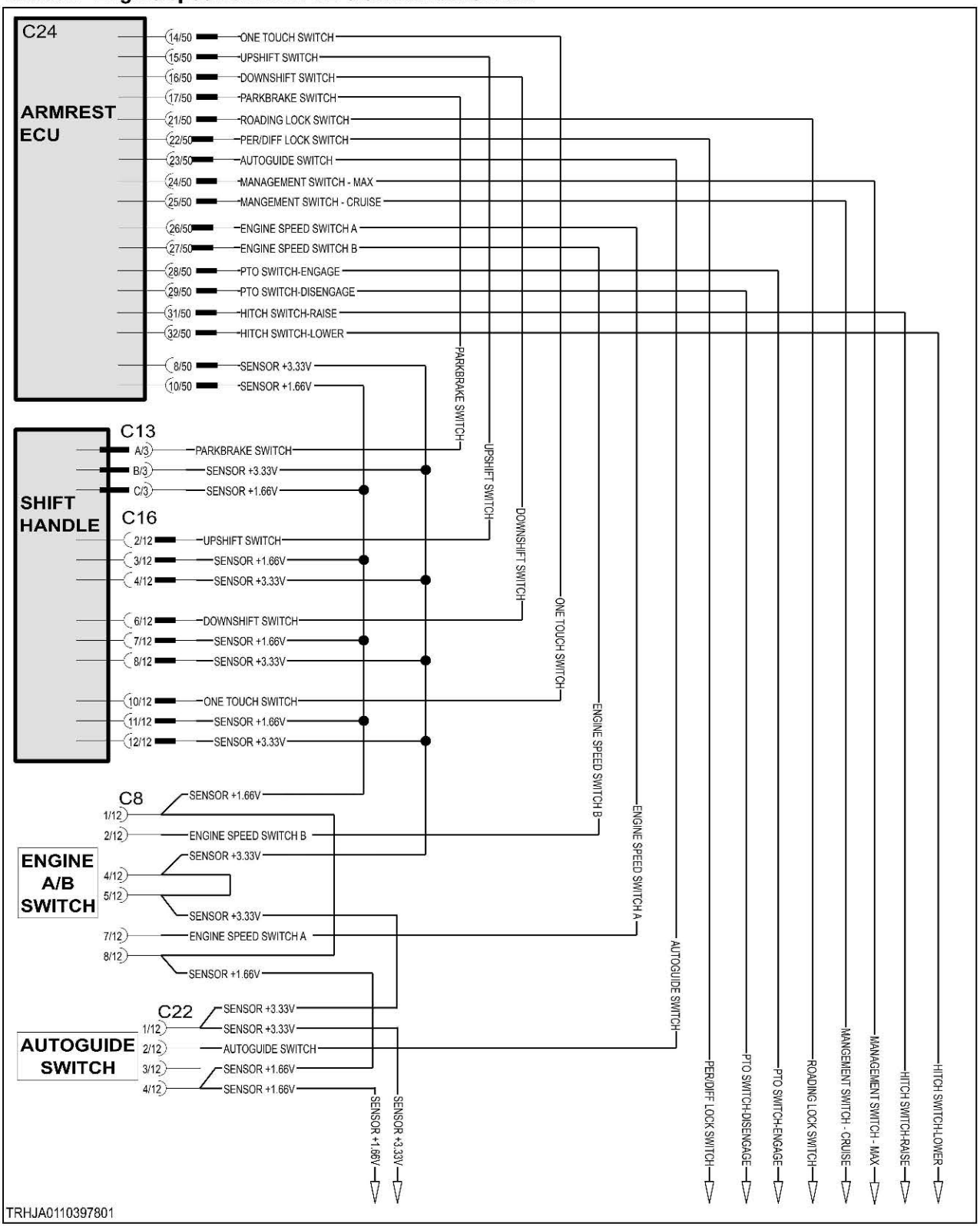

Fig. 402

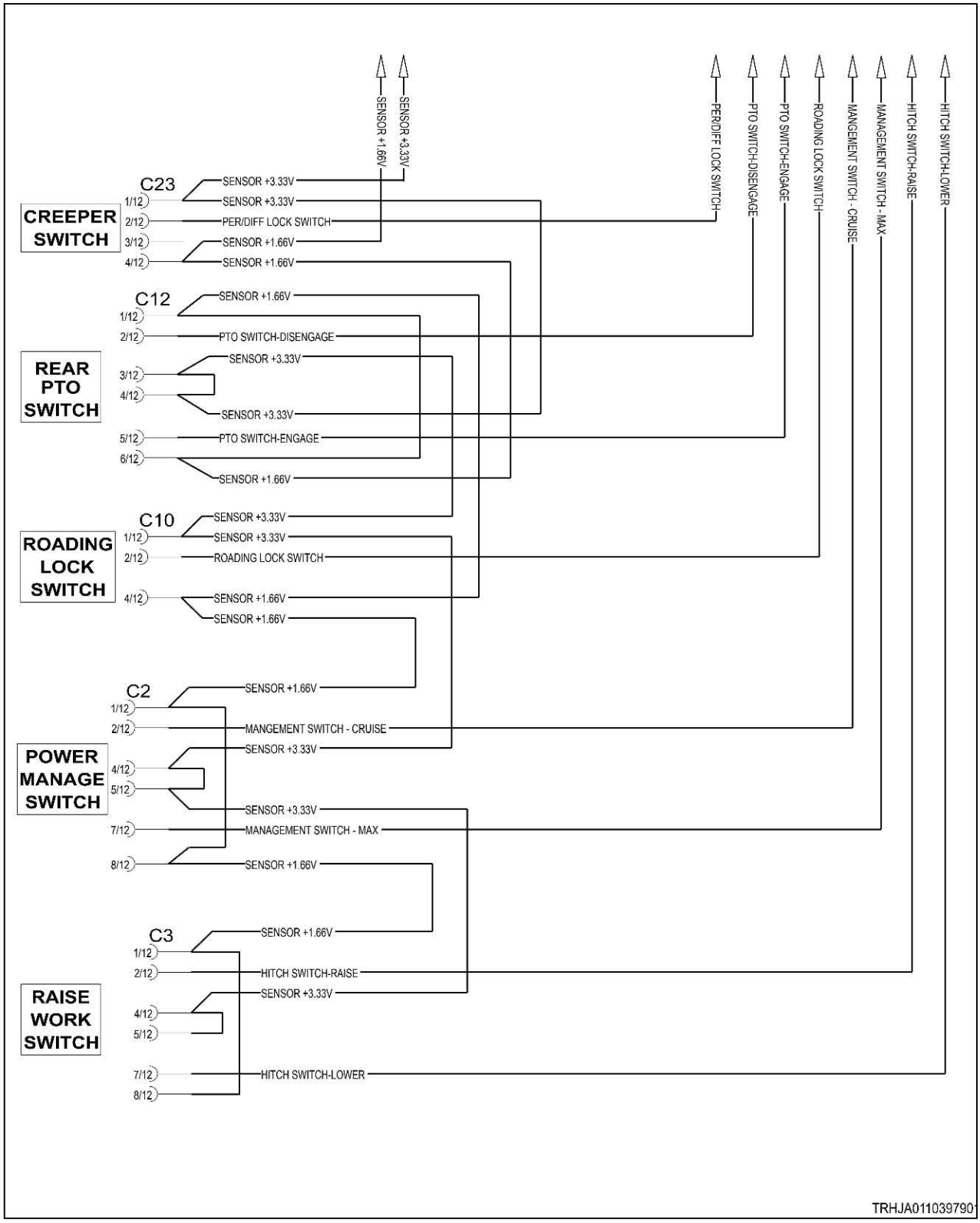
SENSOR +1.66V
SENSOR +3.33V
PER/DIFF LOCK SWITCH
PTO SWITCH-DISENGAGE
PTO SWITCH-ENGAGE
ROADING LOCK SWITCH
MANGEMENT SWITCH - CRUISE
MANAGEMENT SWITCH - MAX
HITCH SWITCH-RAISE
HITCH SWITCH-LOWER
CREEPER SWITCH
C23
1/12
2/12
3/12
4/12
SENSOR +3.33V
SENSOR +3.33V
PER/DIFF LOCK SWITCH
SENSOR +1.66V
SENSOR +1.66V
REAR PTO SWITCH
C12
1/12
2/12
3/12
4/12
5/12
6/12
SENSOR +1.66V
PTO SWITCH-DISENGAGE
SENSOR +3.33V
SENSOR +3.33V
PTO SWITCH-ENGAGE
SENSOR +1.66V
ROADING LOCK SWITCH
C10
1/12
2/12
4/12
SENSOR +3.33V
SENSOR +3.33V
ROADING LOCK SWITCH
SENSOR +1.66V
SENSOR +1.66V
POWER MANAGE SWITCH
C2
1/12
2/12
4/12
5/12
7/12
8/12
SENSOR +1.66V
MANGEMENT SWITCH - CRUISE
SENSOR +3.33V
SENSOR +3.33V
MANAGEMENT SWITCH - MAX
SENSOR +1.66V
RAISE WORK SWITCH
C3
1/12
2/12
4/12
5/12
7/12
8/12
SENSOR +1.66V
HITCH SWITCH-RAISE
SENSOR +3.33V
HITCH SWITCH-LOWER
TRHJA011039790

Fig. 403

10.7.63.2 Engine speed switch A/B



Fig. 404 Switch pinout

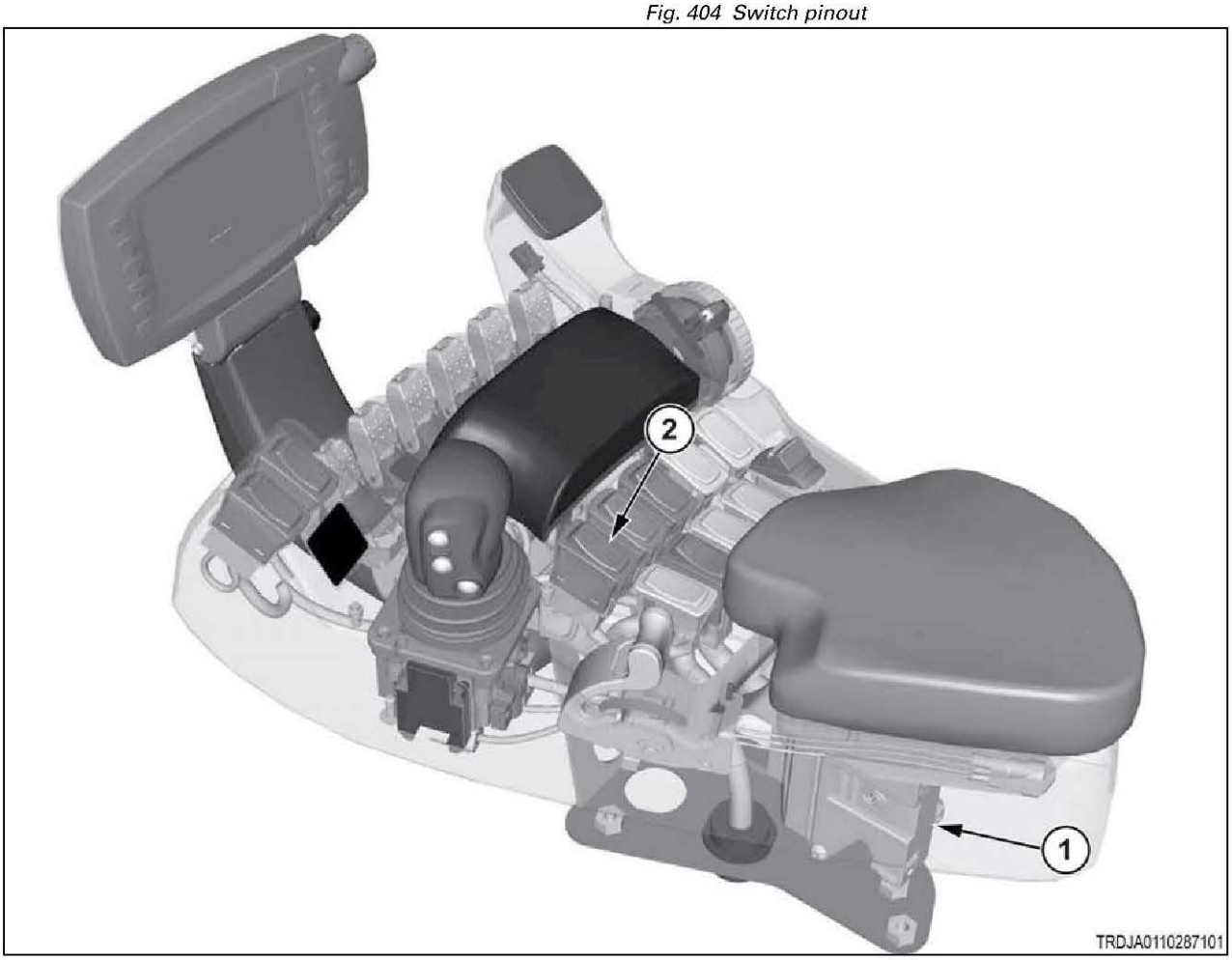

Fig. 405

(1)	Armrest module
(2)	Engine speed switch A/B

10.7.64 Code SA 05 SPN 2970 FMI 03

The engine speed switch A signal voltage is above normal.

The signal voltage is higher than the 3.33-volt supply. The most likely cause is a short circuit to a higher voltage circuit.

The switch is a momentary double-pole, double-throw (DPDT) type switch, except the "common" terminal is the data output instead of a power source. The 4 other contacts are connected to 3.33-volt power and 1.66-volt power. Operating the switch selects one of these voltages for the signal output. One set of contacts is for the A-position, and one set is for the B-position. This error will likely be accompanied by a power supply error too. This information can be used to isolate the cause.

Diagnosis and solution

1. Determine when this error is reported.

a) Turn the key start switch to the on position.

b) Check for this error code (SA 05 SPN 2970 FMI 03) as you operate the switch between the center position and A-on position.

Note that power supply errors will likely also be reported, as noted below.

Result

- The error is reported only when the switch is in the center position.

  Error code SA 05 SPN 3511 FMI 03 (3.33V power) is likely also reported.

  Diagnose the power supply error code first.

  Stop.
- The error is reported only when the switch is in the A-on position.

  Error code SA 05 SPN 3510 FMI 03 (1.66V power) is likely also reported.

  Diagnose the power supply error code first.

  Stop.
- The error is reported regardless of switch position.

  The signal wire is shorted to some voltage source.

  Repair or replace the harness.

  See step 2 to validate the repair.

2. Check if the diagnostic code remains.

a) Inspect and clean the harness connector contacts.

b) Connect all the connectors.

c) Turn the battery disconnect switch to the on position.

d) Turn the key start switch to the on position.

e) Operate the machine at low idle.

f) Check if the diagnostic code remains.

Result

- SPN 2970 FMI 03 is not active.

  Stop.
- SPN 2970 FMI 03 is active.

  Failure of the armrest module is possible but not common. Exit the procedure and do the procedure again. If the diagnostic code remains active, replace the module.

  Stop.

10.7.64.1 Engine speed switch A/B electrical schematic

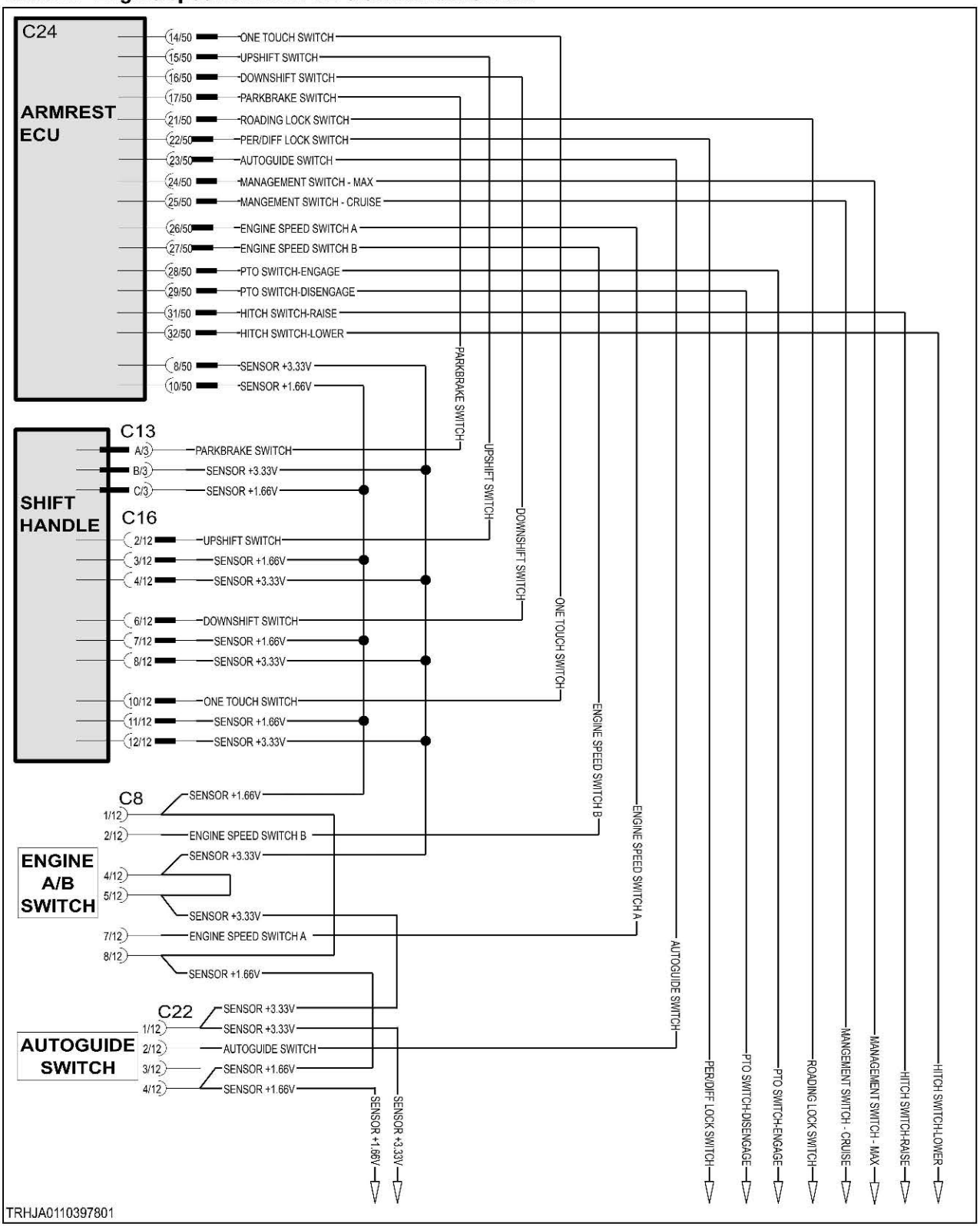

Fig. 406

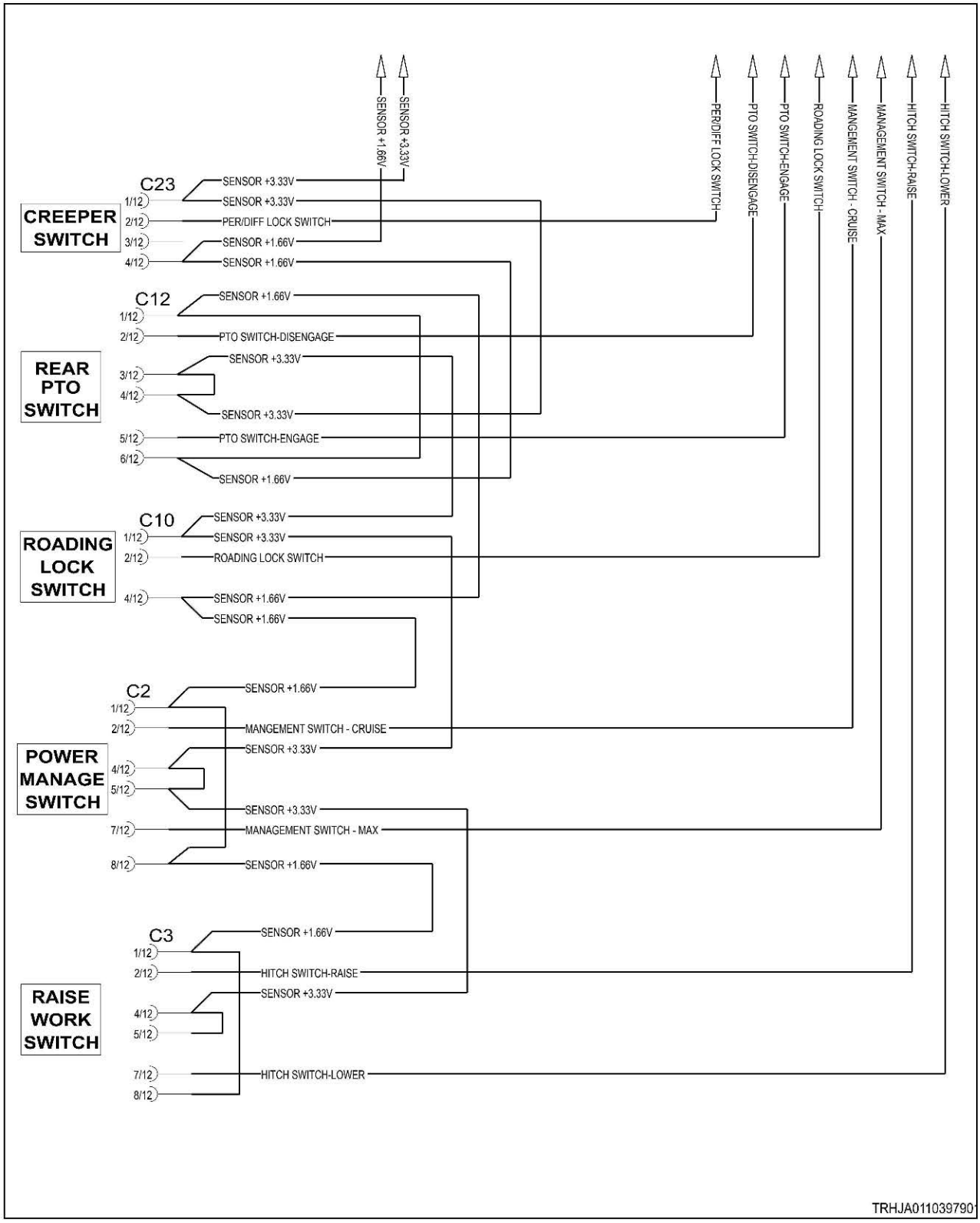
SENSOR +1.66V
SENSOR +3.33V
PER/DIFF LOCK SWITCH
PTO SWITCH-DISENGAGE
PTO SWITCH-ENGAGE
ROADING LOCK SWITCH
MANGEMENT SWITCH - CRUISE
MANAGEMENT SWITCH - MAX
HITCH SWITCH-RAISE
HITCH SWITCH-LOWER
C23
CREEPER SWITCH
1/12
2/12
3/12
4/12
SENSOR +3.33V
SENSOR +3.33V
PER/DIFF LOCK SWITCH
SENSOR +1.66V
SENSOR +1.66V
C12
REAR PTO SWITCH
1/12
2/12
3/12
4/12
5/12
6/12
SENSOR +1.66V
PTO SWITCH-DISENGAGE
SENSOR +3.33V
SENSOR +3.33V
PTO SWITCH-ENGAGE
SENSOR +1.66V
C10
ROADING LOCK SWITCH
1/12
2/12
4/12
SENSOR +3.33V
SENSOR +3.33V
ROADING LOCK SWITCH
SENSOR +1.66V
SENSOR +1.66V
C2
POWER MANAGE SWITCH
1/12
2/12
4/12
5/12
7/12
8/12
SENSOR +1.66V
MANGEMENT SWITCH - CRUISE
SENSOR +3.33V
SENSOR +3.33V
MANAGEMENT SWITCH - MAX
SENSOR +1.66V
C3
RAISE WORK SWITCH
1/12
2/12
4/12
5/12
7/12
8/12
SENSOR +1.66V
HITCH SWITCH-RAISE
SENSOR +3.33V
HITCH SWITCH-LOWER
TRHJA011039790

Fig. 407

10.7.64.2 Engine speed switch A/B



Fig. 408 Switch pinout

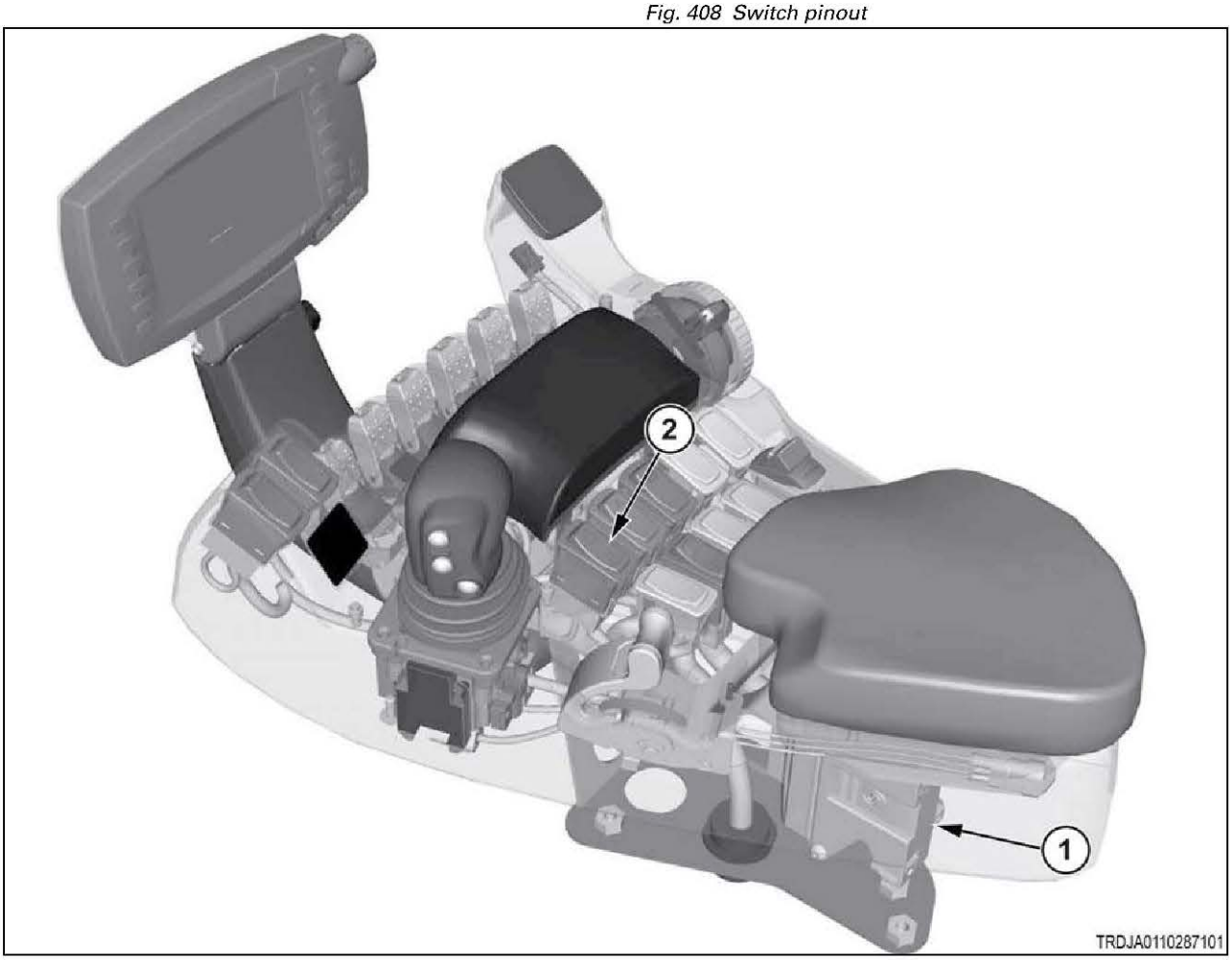

Fig. 409

(1)	Armrest module
(2)	Engine speed switch A/B

10.7.65 Code SA 05 SPN 2970 FMI 04

The engine speed switch A signal voltage is below normal.

The signal voltage is lower than the 1.66-volt supply. The most likely cause is a short circuit to ground.

The switch is a momentary double-pole, double-throw (DPDT) type switch, except the "common" terminal is the data output instead of a power source. The 4 other contacts are connected to 3.33-volt power and 1.66-volt power. Operating the switch selects one of these voltages for the signal output. One set of contacts is for the A-position, and one set is for the B-position. This error will likely be accompanied by a power supply error too. This information can be used to isolate the cause.

Diagnosis and solution

1. Determine when this error is reported.

a) Turn the key start switch to the on position.

b) Check for this error code (SA 05 SPN 2970 FMI 04) as you operate the switch between the center position and A-on position.

Note that power supply errors will likely also be reported, as noted below.

Result

- The error is reported only when the switch is in the center position.

  Error code SA 05 SPN 3511 FMI 03 (3.33V power) is likely also reported.

  Diagnose the power supply error code first.

  Stop.
- The error is reported only when the switch is in the A-on position.

  Error code SA 05 SPN 3510 FMI 03 (1.66V power) is likely also reported.

  Diagnose the power supply error code first.

  Stop.
- The error is reported regardless of switch position.

  The signal wire is shorted to ground.

  Repair or replace the harness.

  See step 2 to validate the repair.

2. Check if the diagnostic code remains.

a) Inspect and clean the harness connector contacts.

b) Connect all the connectors.

c) Turn the battery disconnect switch to the on position.

d) Turn the key start switch to the on position.

e) Operate the machine at low idle.

f) Check if the diagnostic code remains.

Result

- SPN 2970 FMI 04 is not active.

  Stop.
- SPN 2970 FMI 04 is active.

  Failure of the armrest module is possible but not common. Exit the procedure and do the procedure again. If the diagnostic code remains active, replace the module.

  Stop.

10.7.65.1 Engine speed switch A/B electrical schematic

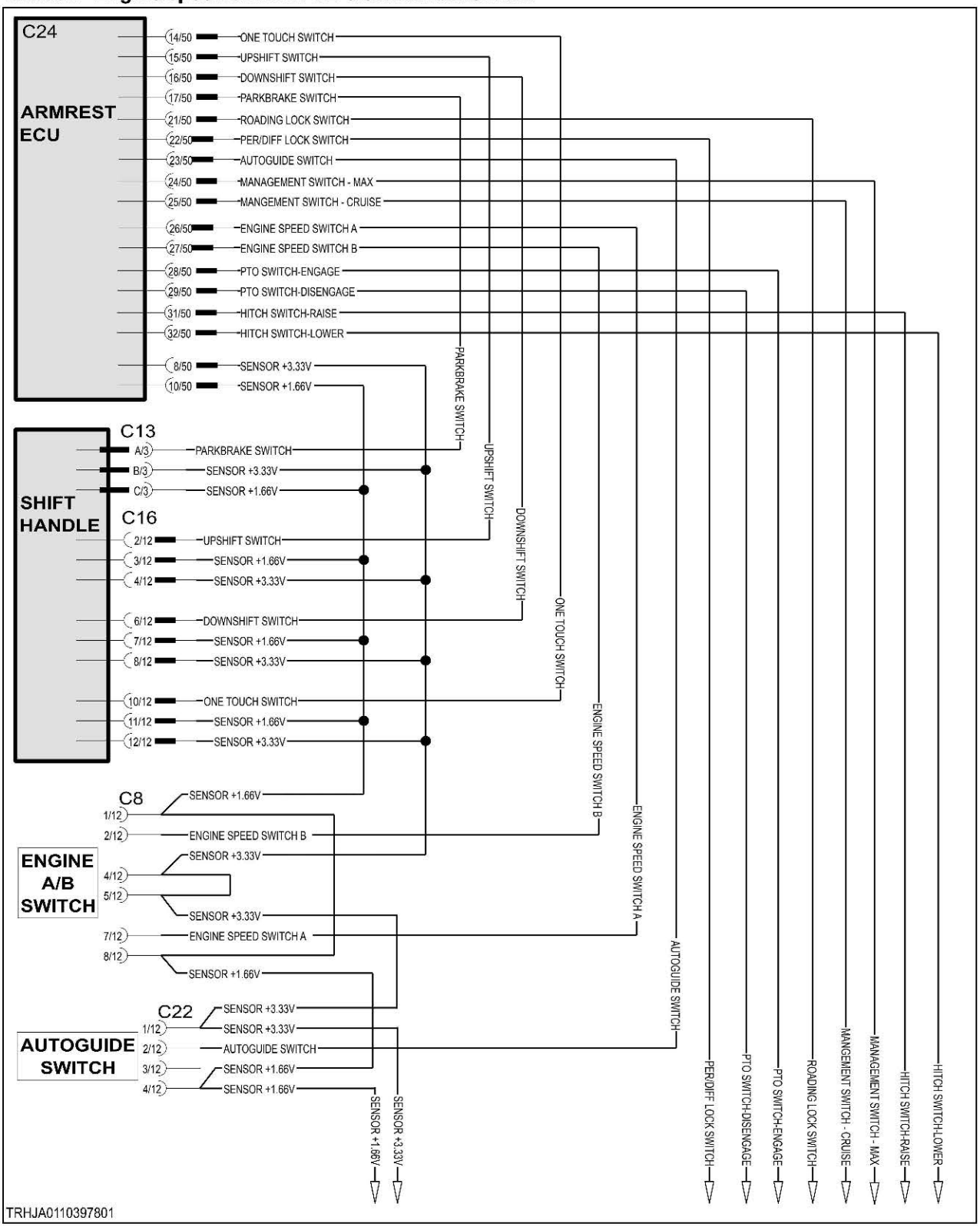

Fig. 410

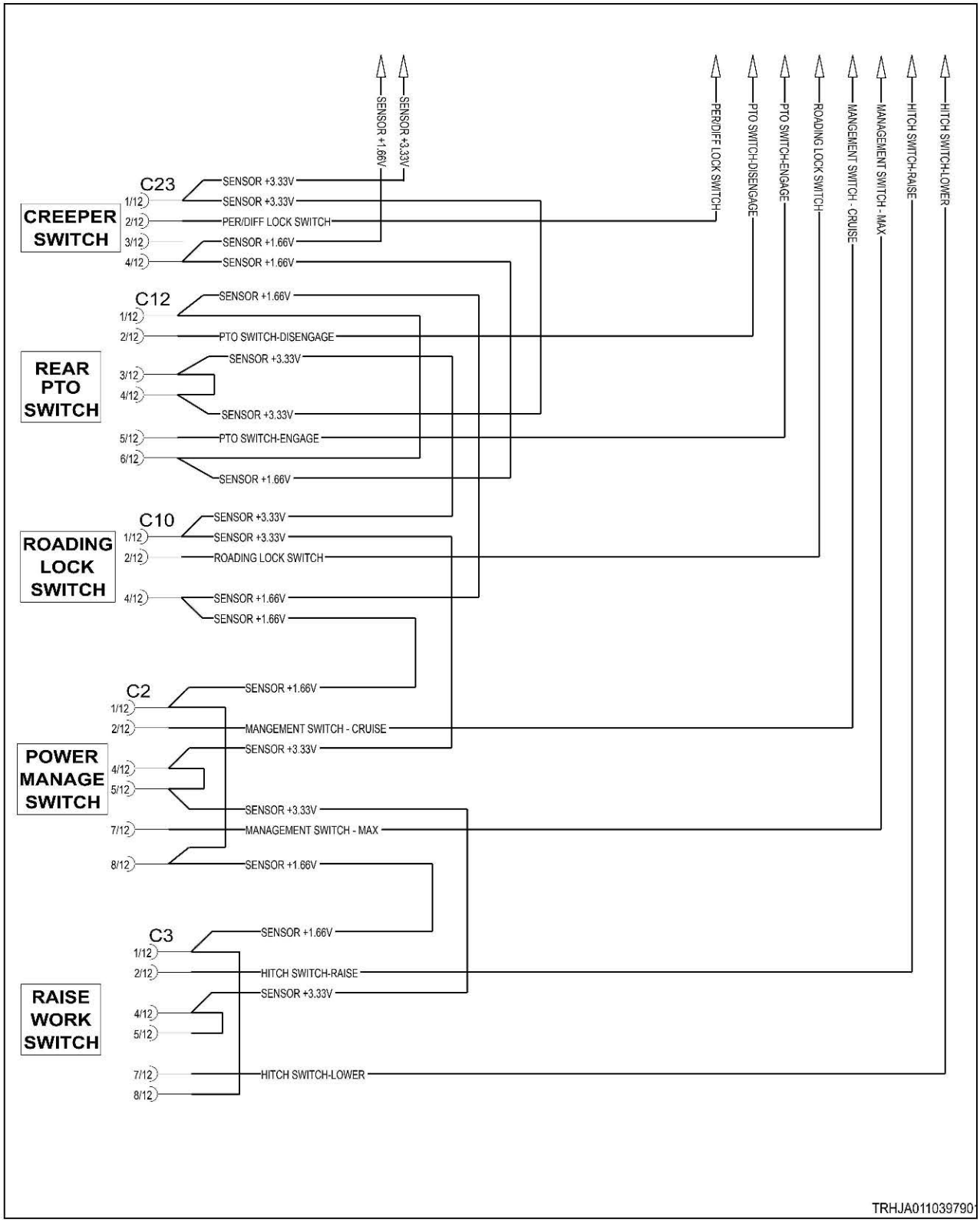
SENSOR +1.66V
SENSOR +3.33V
PER/DIFF LOCK SWITCH
PTO SWITCH-DISENGAGE
PTO SWITCH-ENGAGE
ROADING LOCK SWITCH
MANGEMENT SWITCH - CRUISE
MANAGEMENT SWITCH - MAX
HITCH SWITCH-RAISE
HITCH SWITCH-LOWER
CREEPER SWITCH
C23
1/12
2/12
3/12
4/12
SENSOR +3.33V
SENSOR +3.33V
PER/DIFF LOCK SWITCH
SENSOR +1.66V
SENSOR +1.66V
REAR PTO SWITCH
C12
1/12
2/12
3/12
4/12
5/12
6/12
SENSOR +1.66V
PTO SWITCH-DISENGAGE
SENSOR +3.33V
SENSOR +3.33V
PTO SWITCH-ENGAGE
SENSOR +1.66V
ROADING LOCK SWITCH
C10
1/12
2/12
4/12
SENSOR +3.33V
SENSOR +3.33V
ROADING LOCK SWITCH
SENSOR +1.66V
SENSOR +1.66V
POWER MANAGE SWITCH
C2
1/12
2/12
4/12
5/12
7/12
8/12
SENSOR +1.66V
MANGEMENT SWITCH - CRUISE
SENSOR +3.33V
SENSOR +3.33V
MANAGEMENT SWITCH - MAX
SENSOR +1.66V
RAISE WORK SWITCH
C3
1/12
2/12
4/12
5/12
7/12
8/12
SENSOR +1.66V
HITCH SWITCH-RAISE
SENSOR +3.33V
HITCH SWITCH-LOWER
TRHJA011039790

Fig. 411

10.7.65.2 Engine speed switch A/B



Fig. 412 Switch pinout

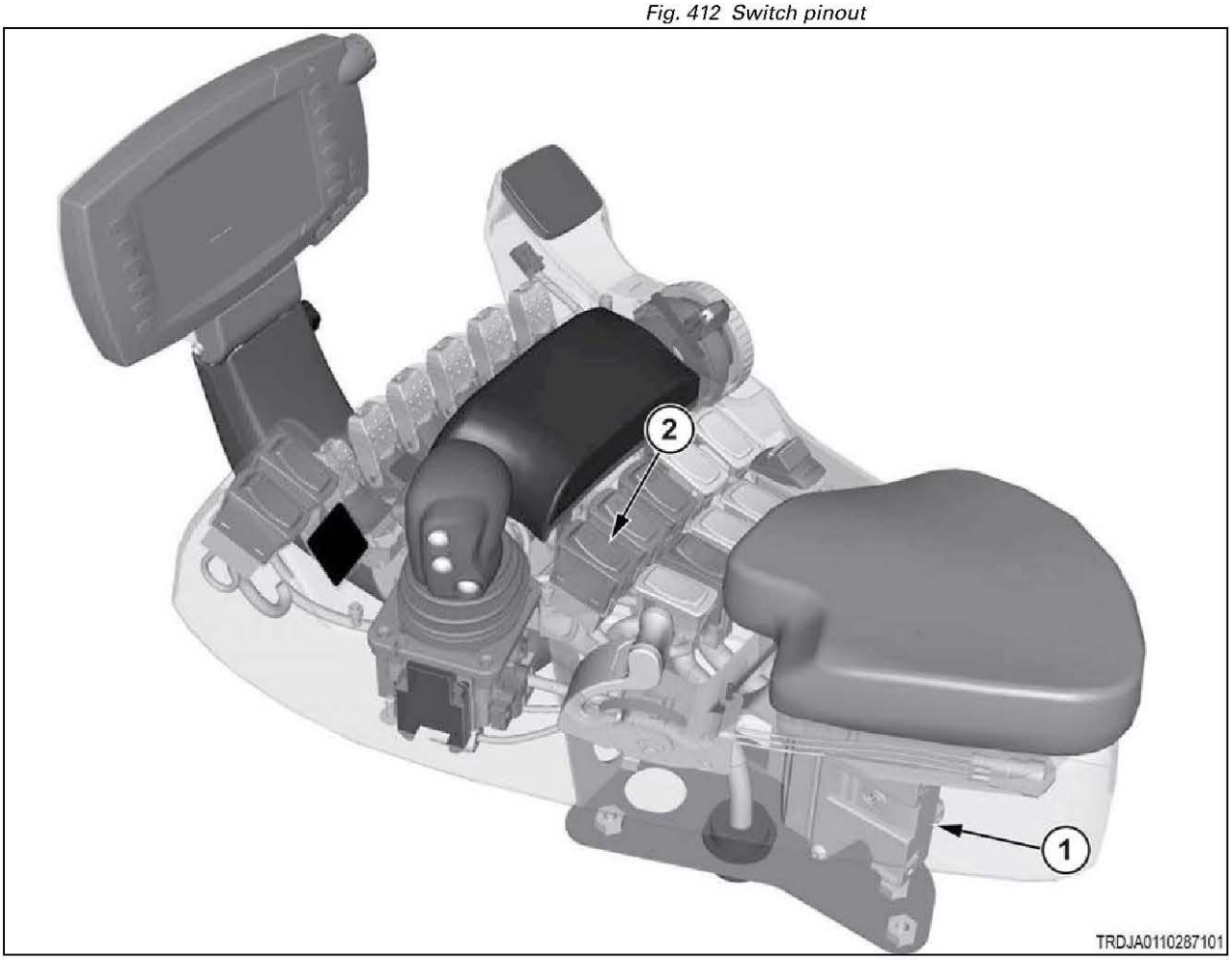

Fig. 413

(1)	Armrest module
(2)	Engine speed switch A/B

10.7.66 Code SA 05 SPN 2970 FMI 05

Open circuit in the engine speed A switch circuit.

The switch is a momentary double-pole, double-throw (DPDT) type switch, except the "common" terminal is the data output instead of a power source. The 4 other contacts are connected to 3.33-volt power and 1.66-volt power. Operating the switch selects one of these voltages for the signal output. One set of contacts is for engine speed A, and the other set is for engine speed B. These 2 power circuits are shared by several other function switches on the armrest. This knowledge can aid in diagnosing the fault.

Diagnosis and solution

1. Determine when this error is reported.
   a) Turn the key start switch to the on position.
   b) Check whether the error code is reported as you operate the switch between on and off states.

   Result

   - The error is reported only when the switch is in the off position.

     The open circuit is in the 3.33V power circuit.

     See step 2 to isolate the location.
   - The error is reported only when the switch is in the on position.

     The open circuit is in the 1.66V power circuit.

     See step 2 to isolate the location.
   - The error is reported regardless of switch position.

     The open circuit is in the signal circuit.

     Repair or replace the armrest harness.

     See step 3 to validate the repair.

2. Isolate the power circuit open circuit.
   a) Operate all upstream (and at least one downstream) armrest switches, according to the list below, from their off to on positions.

      Electrical sequence of switches, starting from the armrest module.

      1. Shift Handle (3 pushbuttons)
      2. Engine A/B switch
      3. Autoguide switch
      4. Creeper switch
      5. Rear PTO
      6. Roading Lock switch
      7. Power management (cruise/full) switch
      8. Hitch Raise/Work switch
   b) Observe which other switches (if any) exhibit similar open circuit error codes.

   Result

   - At least one upstream switch reported a similar error.

     The open circuit lies at, or just upstream from, that switch.

     Repair or replace the armrest harness.

     See step 3 to validate the repair.

- Only downstream switches reported similar errors.

  The harness is open circuited at this switch location.

  Repair or replace the harness.

  See step 3 to validate the repair.
- No other switches reported similar errors.

  The switch is at fault.

  Replace the switch.

  See step 3 to validate the repair.

3. Check if the fault code remains.

a) Inspect and clean the harness connector contacts.
b) Connect all the connectors.
c) Turn the battery disconnect switch to the on position.
d) Turn the key start switch to the on position.
e) Operate the machine at low idle.
f) Check if the fault code remains.

Result

- SPN 2970 FMI 05 is not active.

  Stop.
- SPN 2970 FMI 05 is active.

  Failure of the armrest module is possible but not common. Exit the procedure and do the procedure again. If the fault code remains active, replace the armrest module.

  Stop.

10.7.66.1 Engine speed switch A/B electrical schematic

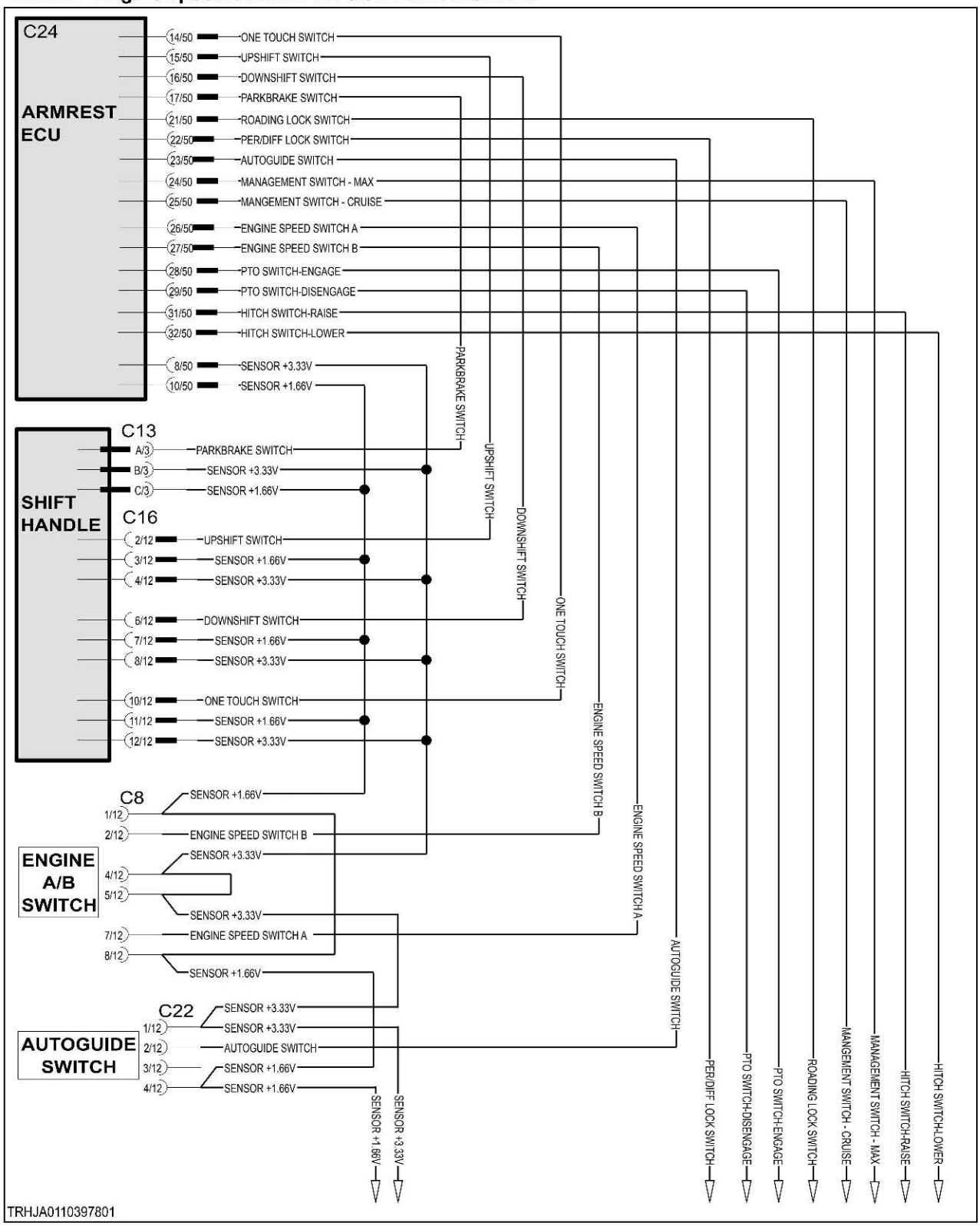

Fig. 414

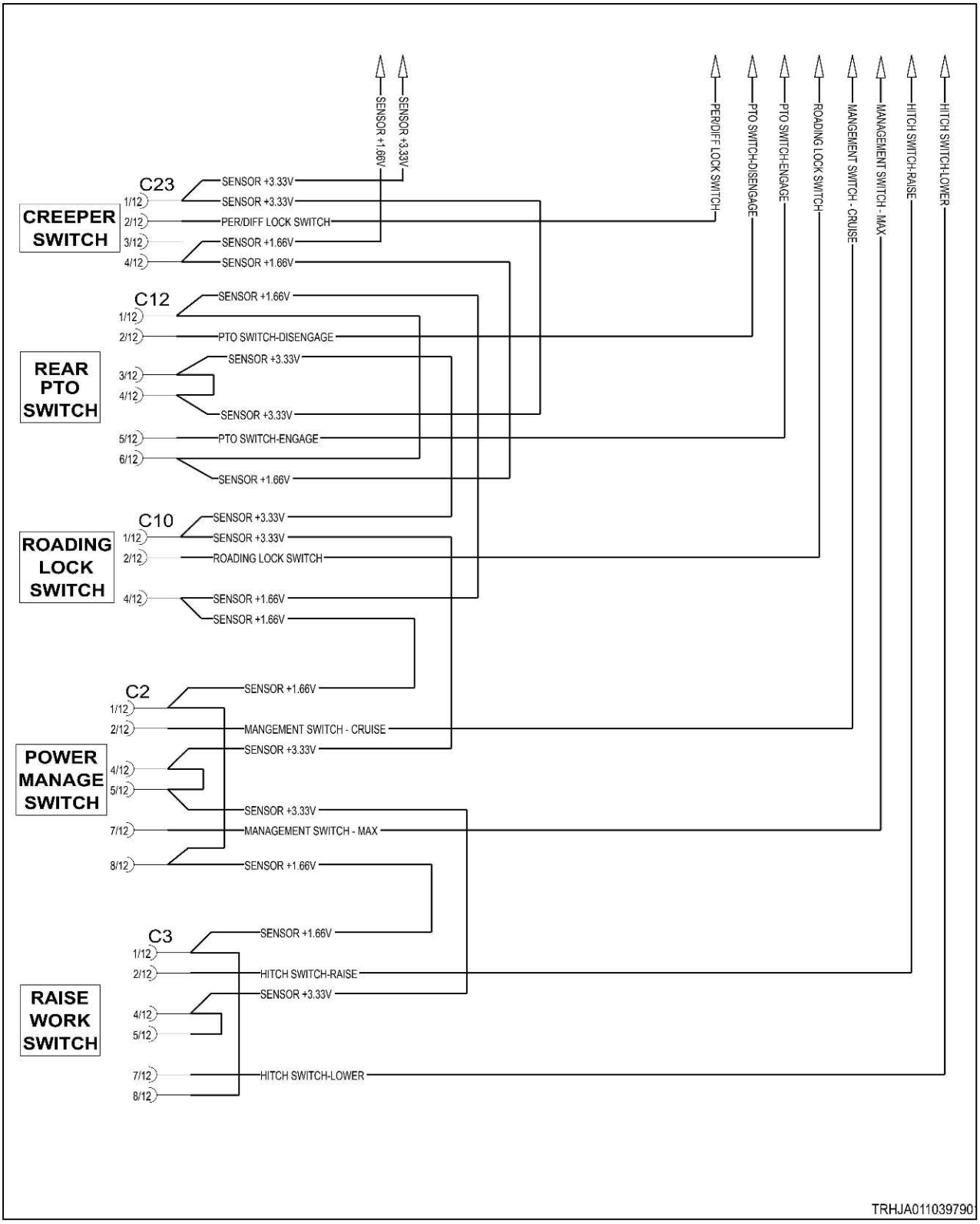
SENSOR +1.66V
SENSOR +3.33V
PER/DIFF LOCK SWITCH
PTO SWITCH-DISENGAGE
PTO SWITCH-ENGAGE
ROADING LOCK SWITCH
MANGEMENT SWITCH - CRUISE
MANAGEMENT SWITCH - MAX
HITCH SWITCH-RAISE
HITCH SWITCH-LOWER
C23
CREEPER SWITCH
1/12
2/12
3/12
4/12
SENSOR +3.33V
SENSOR +3.33V
PER/DIFF LOCK SWITCH
SENSOR +1.66V
SENSOR +1.66V
C12
REAR PTO SWITCH
1/12
2/12
3/12
4/12
5/12
6/12
SENSOR +1.66V
PTO SWITCH-DISENGAGE
SENSOR +3.33V
SENSOR +3.33V
PTO SWITCH-ENGAGE
SENSOR +1.66V
C10
ROADING LOCK SWITCH
1/12
2/12
4/12
SENSOR +3.33V
SENSOR +3.33V
ROADING LOCK SWITCH
SENSOR +1.66V
SENSOR +1.66V
C2
POWER MANAGE SWITCH
1/12
2/12
4/12
5/12
7/12
8/12
SENSOR +1.66V
MANGEMENT SWITCH - CRUISE
SENSOR +3.33V
SENSOR +3.33V
MANAGEMENT SWITCH - MAX
SENSOR +1.66V
C3
RAISE WORK SWITCH
1/12
2/12
4/12
5/12
7/12
8/12
SENSOR +1.66V
HITCH SWITCH-RAISE
SENSOR +3.33V
HITCH SWITCH-LOWER
TRHJA011039790

Fig. 415

10.7.66.2 Engine speed switch A/B



Fig. 416 Switch pinout

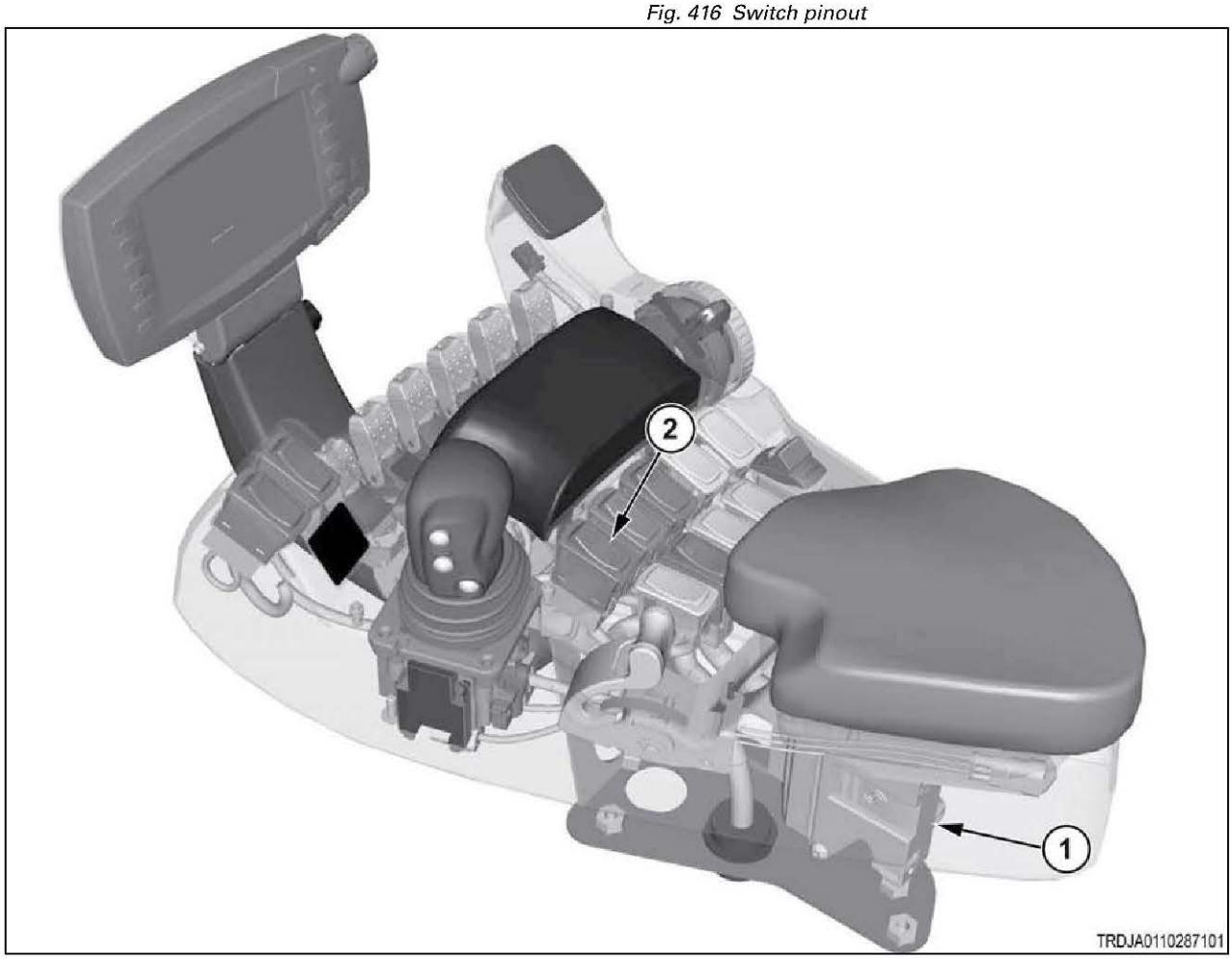

Fig. 417

(1)	Armrest module
(2)	Engine speed switch A/B

10.7.67 Code SA 05 SPN 2971 FMI 03

The engine speed switch B signal voltage is above normal.

The signal voltage is higher than the 3.33-volt supply. The most likely cause is a short circuit to a higher voltage circuit.

The switch is a momentary double-pole, double-throw (DPDT) type switch, except the "common" terminal is the data output instead of a power source. The 4 other contacts are connected to 3.33-volt power and 1.66-volt power. Operating the switch selects one of these voltages for the signal output. This error will likely be accompanied by a power supply error too. This information can be used to isolate the cause.

Diagnosis and solution

1. Determine when this error is reported.

a) Turn the key start switch to the on position.

b) Check for this error code (SA 05 SPN 2971 FMI 03) as you operate the switch between the center position and B-on position.

Note that power supply errors will likely also be reported, as noted below.

Result

- The error is reported only when the switch is in the center position.

  Error code SA 05 SPN 3511 FMI 03 (3.33V power) is likely also reported.

  Diagnose the power supply error code first.

  Stop.
- The error is reported only when the switch is in the B-on position.

  Error code SA 05 SPN 3510 FMI 03 (1.66V power) is likely also reported.

  Diagnose the power supply error code first.

  Stop.
- The error is reported regardless of switch position.

  The signal wire is shorted to some voltage source.

  Repair or replace the harness.

  See step 2 to validate the repair.

2. Check if the diagnostic code remains.

a) Inspect and clean the harness connector contacts.

b) Connect all the connectors.

c) Turn the battery disconnect switch to the on position.

d) Turn the key start switch to the on position.

e) Operate the machine at low idle.

f) Check if the diagnostic code remains.

Result

- SPN 2971 FMI 03 is not active.

  Stop.
- SPN 2971 FMI 03 is active.

  Failure of the armrest module is possible but not common. Exit the procedure and do the procedure again. If the diagnostic code remains active, replace the module.

  Stop.

10.7.67.1 Engine speed switch A/B electrical schematic

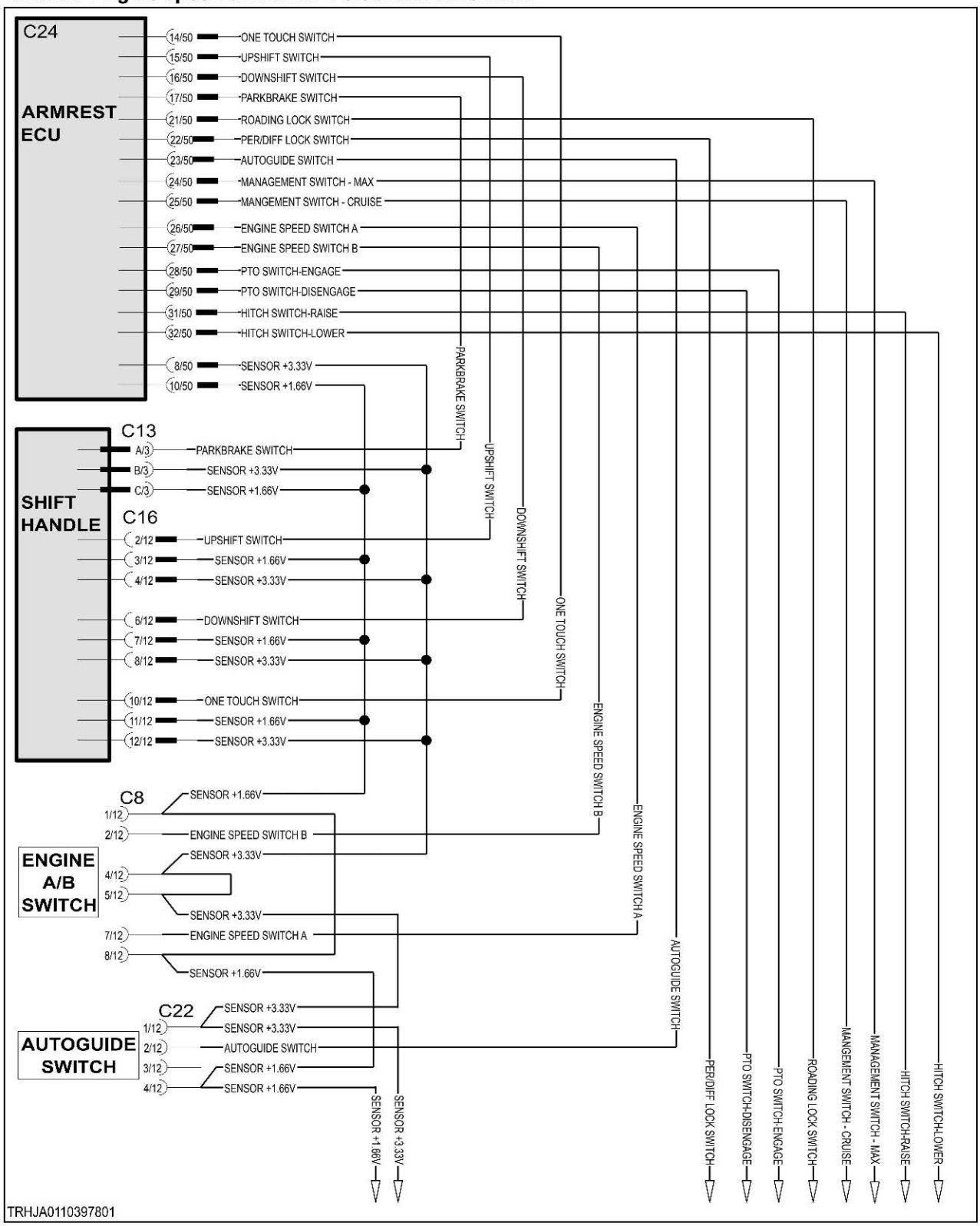

Fig. 418

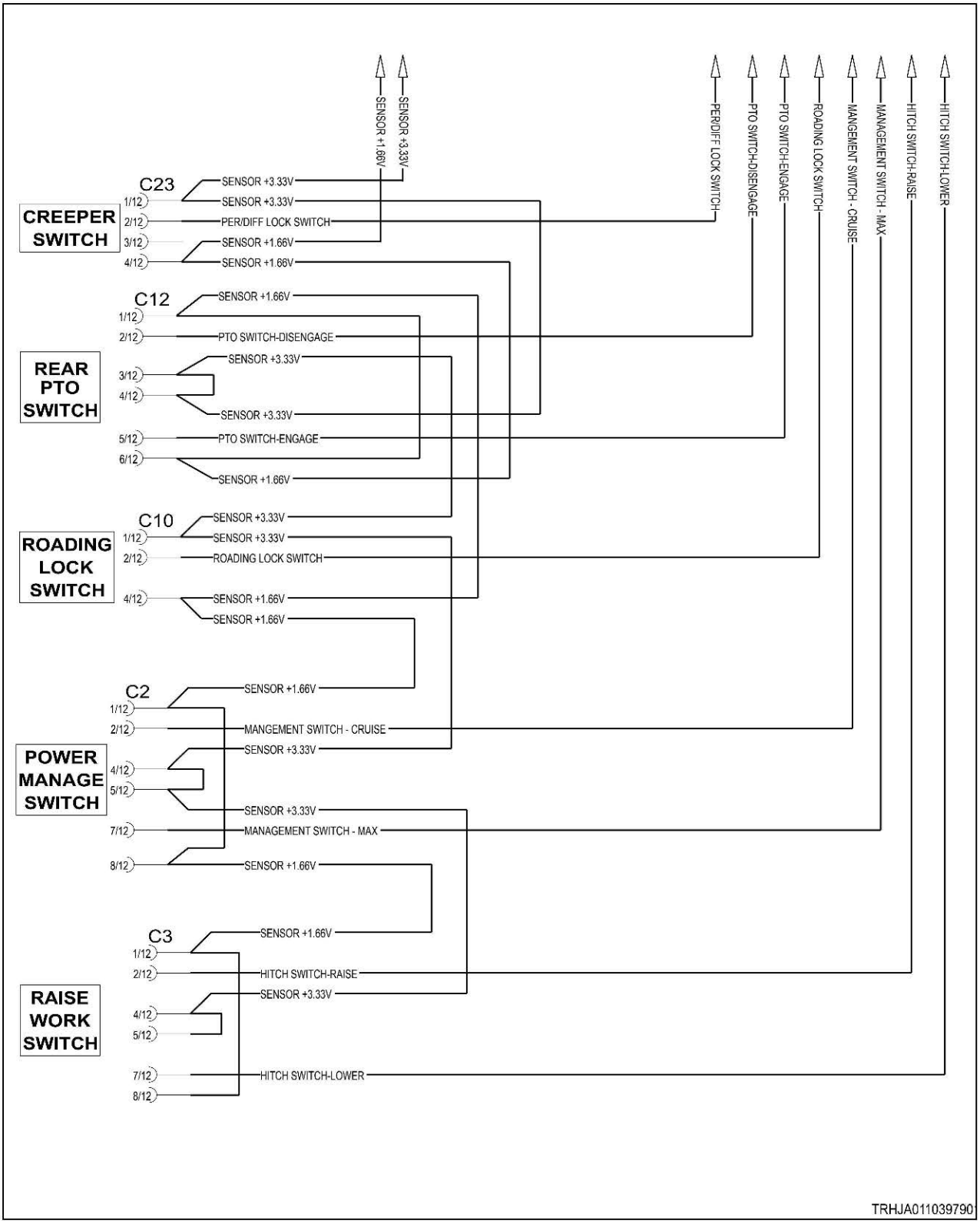
SENSOR +1.66V
SENSOR +3.33V
PER/DIFF LOCK SWITCH
PTO SWITCH-DISENGAGE
PTO SWITCH-ENGAGE
ROADING LOCK SWITCH
MANGEMENT SWITCH - CRUISE
MANAGEMENT SWITCH - MAX
HITCH SWITCH-RAISE
HITCH SWITCH-LOWER
C23
1/12
2/12
3/12
4/12
CREEPER SWITCH
SENSOR +3.33V
SENSOR +3.33V
PER/DIFF LOCK SWITCH
SENSOR +1.66V
SENSOR +1.66V
C12
1/12
2/12
3/12
4/12
5/12
6/12
REAR PTO SWITCH
SENSOR +1.66V
PTO SWITCH-DISENGAGE
SENSOR +3.33V
SENSOR +3.33V
PTO SWITCH-ENGAGE
SENSOR +1.66V
C10
1/12
2/12
4/12
ROADING LOCK SWITCH
SENSOR +3.33V
SENSOR +3.33V
ROADING LOCK SWITCH
SENSOR +1.66V
SENSOR +1.66V
C2
1/12
2/12
4/12
5/12
7/12
8/12
POWER MANAGE SWITCH
SENSOR +1.66V
MANGEMENT SWITCH - CRUISE
SENSOR +3.33V
SENSOR +3.33V
MANAGEMENT SWITCH - MAX
SENSOR +1.66V
C3
1/12
2/12
4/12
5/12
7/12
8/12
RAISE WORK SWITCH
SENSOR +1.66V
HITCH SWITCH-RAISE
SENSOR +3.33V
HITCH SWITCH-LOWER
TRHJA011039790

Fig. 419

10.7.67.2 Engine speed switch A/B



Fig. 420 Switch pinout

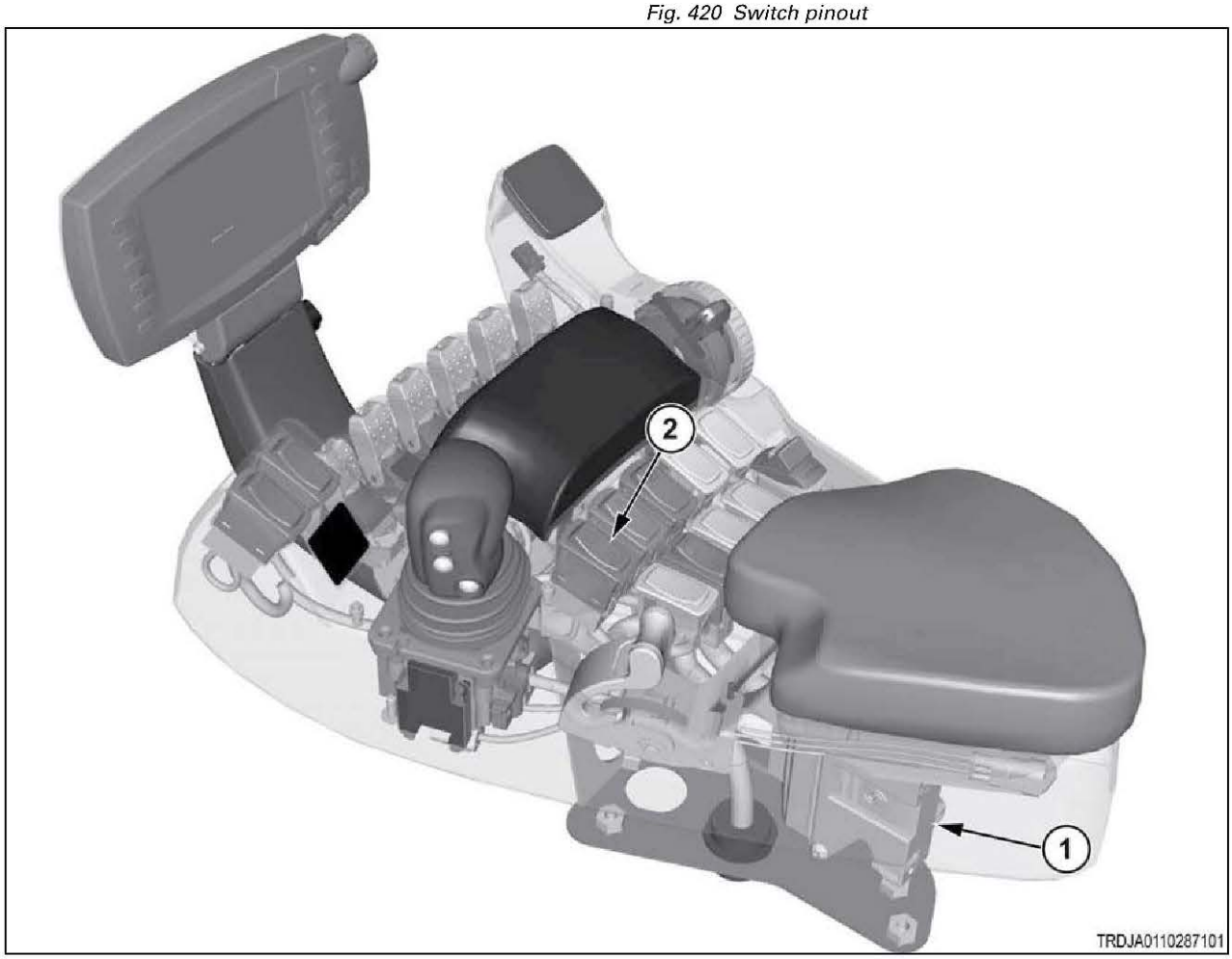

Fig. 421

(1)	Armrest module
(2)	Engine speed switch A/B

10.7.68 Code SA 05 SPN 2971 FMI 04

The engine speed switch B signal voltage is below normal.

The signal voltage is lower than the 1.66-volt supply. The most likely cause is a short circuit to ground.

The switch is a momentary double-pole, double-throw (DPDT) type switch, except the "common" terminal is the data output instead of a power source. The 4 other contacts are connected to 3.33-volt power and 1.66-volt power. Operating the switch selects one of these voltages for the signal output. One set of contacts is for the A-position, and one set is for the B-position. This error will likely be accompanied by a power supply error too. This information can be used to isolate the cause.

Diagnosis and solution

1. Determine when this error is reported.

a) Turn the key start switch to the on position.

b) Check for this error code (SA 05 SPN 2971 FMI 04) as you operate the switch between the center position and B-on position.

Note that power supply errors will likely also be reported, as noted below.

Result

- The error is reported only when the switch is in the center position.

  Error code SA 05 SPN 3511 FMI 03 (3.33V power) is likely also reported.

  Diagnose the power supply error code first.

  Stop.
- The error is reported only when the switch is in the B-on position.

  Error code SA 05 SPN 3510 FMI 03 (1.66V power) is likely also reported.

  Diagnose the power supply error code first.

  Stop.
- The error is reported regardless of switch position.

  The signal wire is shorted to ground.

  Repair or replace the harness.

  See step 2 to validate the repair.

2. Check if the diagnostic code remains.

a) Inspect and clean the harness connector contacts.

b) Connect all the connectors.

c) Turn the battery disconnect switch to the on position.

d) Turn the key start switch to the on position.

e) Operate the machine at low idle.

f) Check if the diagnostic code remains.

Result

- SPN 2971 FMI 04 is not active.

  Stop.
- SPN 2971 FMI 04 is active.

  Failure of the armrest module is possible but not common. Exit the procedure and do the procedure again. If the diagnostic code remains active, replace the module.

  Stop.

10.7.68.1 Engine speed switch A/B electrical schematic

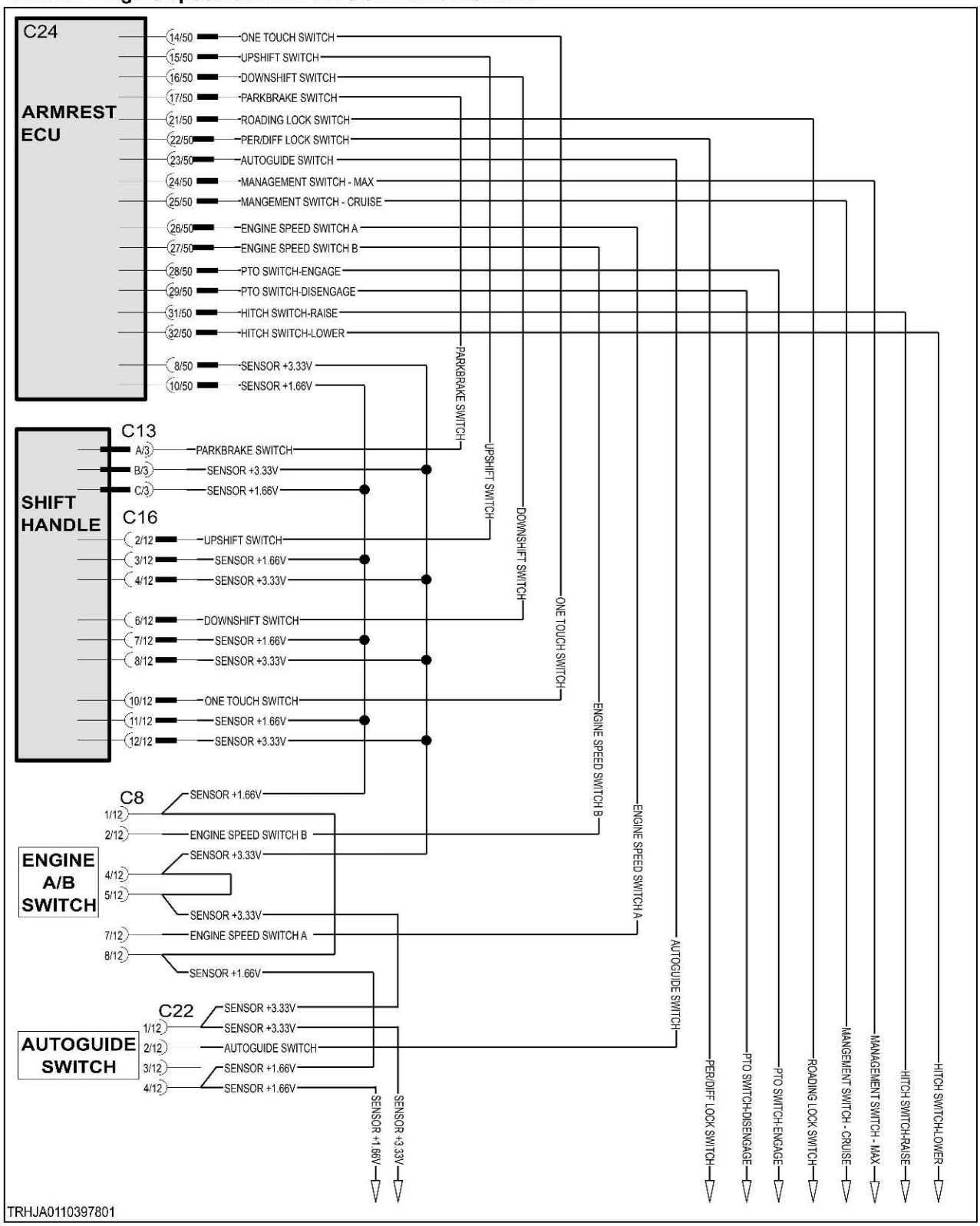

Fig. 422

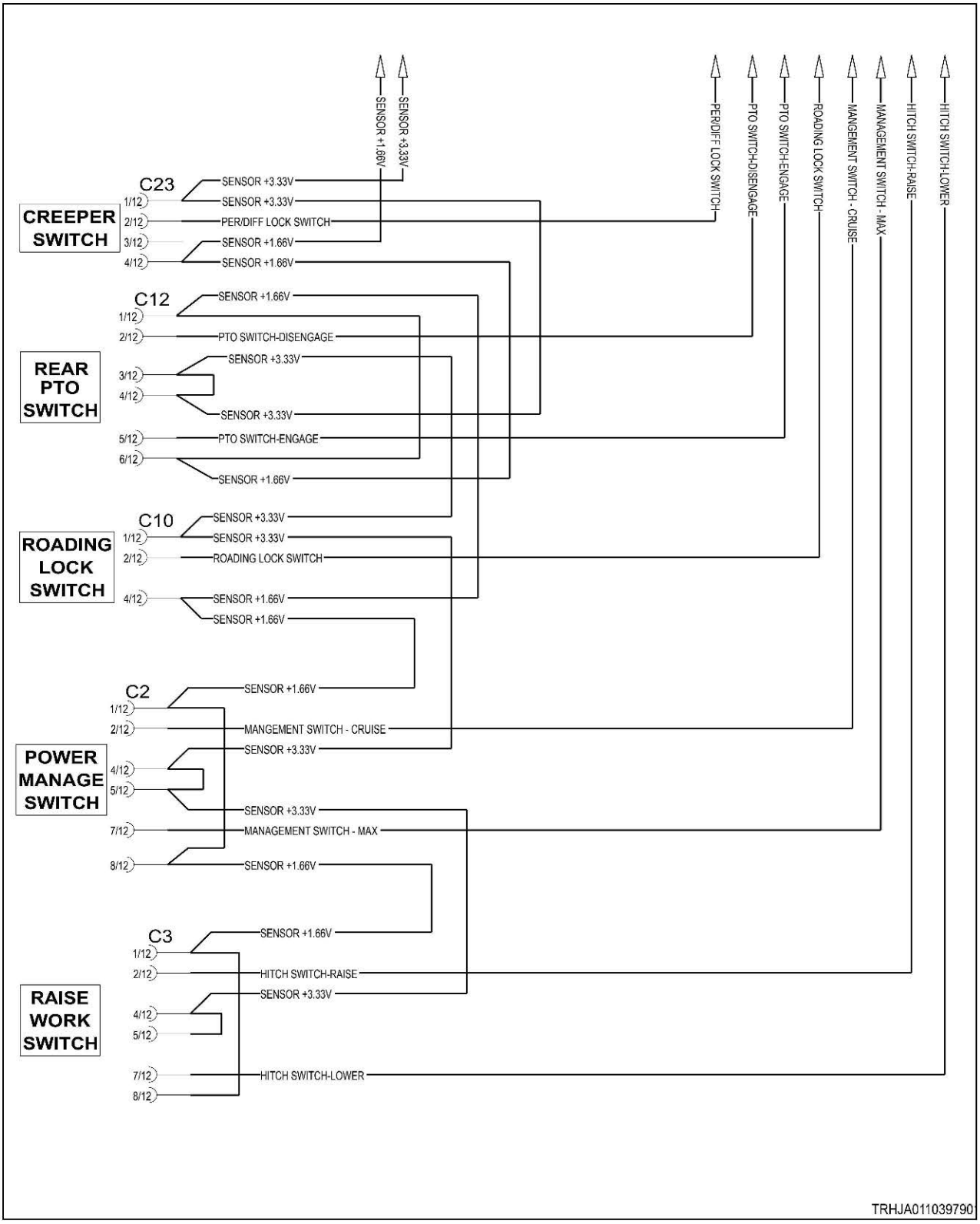
SENSOR +1.66V
SENSOR +3.33V
PER/DIFF LOCK SWITCH
PTO SWITCH-DISENGAGE
PTO SWITCH-ENGAGE
ROADING LOCK SWITCH
MANGEMENT SWITCH - CRUISE
MANAGEMENT SWITCH - MAX
HITCH SWITCH-RAISE
HITCH SWITCH-LOWER
CREEPER SWITCH
C23
1/12
2/12
3/12
4/12
SENSOR +3.33V
SENSOR +3.33V
PER/DIFF LOCK SWITCH
SENSOR +1.66V
SENSOR +1.66V
C12
REAR PTO SWITCH
1/12
2/12
3/12
4/12
5/12
6/12
SENSOR +1.66V
PTO SWITCH-DISENGAGE
SENSOR +3.33V
SENSOR +3.33V
PTO SWITCH-ENGAGE
SENSOR +1.66V
C10
ROADING LOCK SWITCH
1/12
2/12
4/12
SENSOR +3.33V
SENSOR +3.33V
ROADING LOCK SWITCH
SENSOR +1.66V
SENSOR +1.66V
C2
POWER MANAGE SWITCH
1/12
2/12
4/12
5/12
7/12
8/12
SENSOR +1.66V
MANGEMENT SWITCH - CRUISE
SENSOR +3.33V
SENSOR +3.33V
MANAGEMENT SWITCH - MAX
SENSOR +1.66V
C3
RAISE WORK SWITCH
1/12
2/12
4/12
5/12
7/12
8/12
SENSOR +1.66V
HITCH SWITCH-RAISE
SENSOR +3.33V
HITCH SWITCH-LOWER
TRHJA011039790

Fig. 423

10.7.68.2 Engine speed switch A/B



Fig. 424 Switch pinout

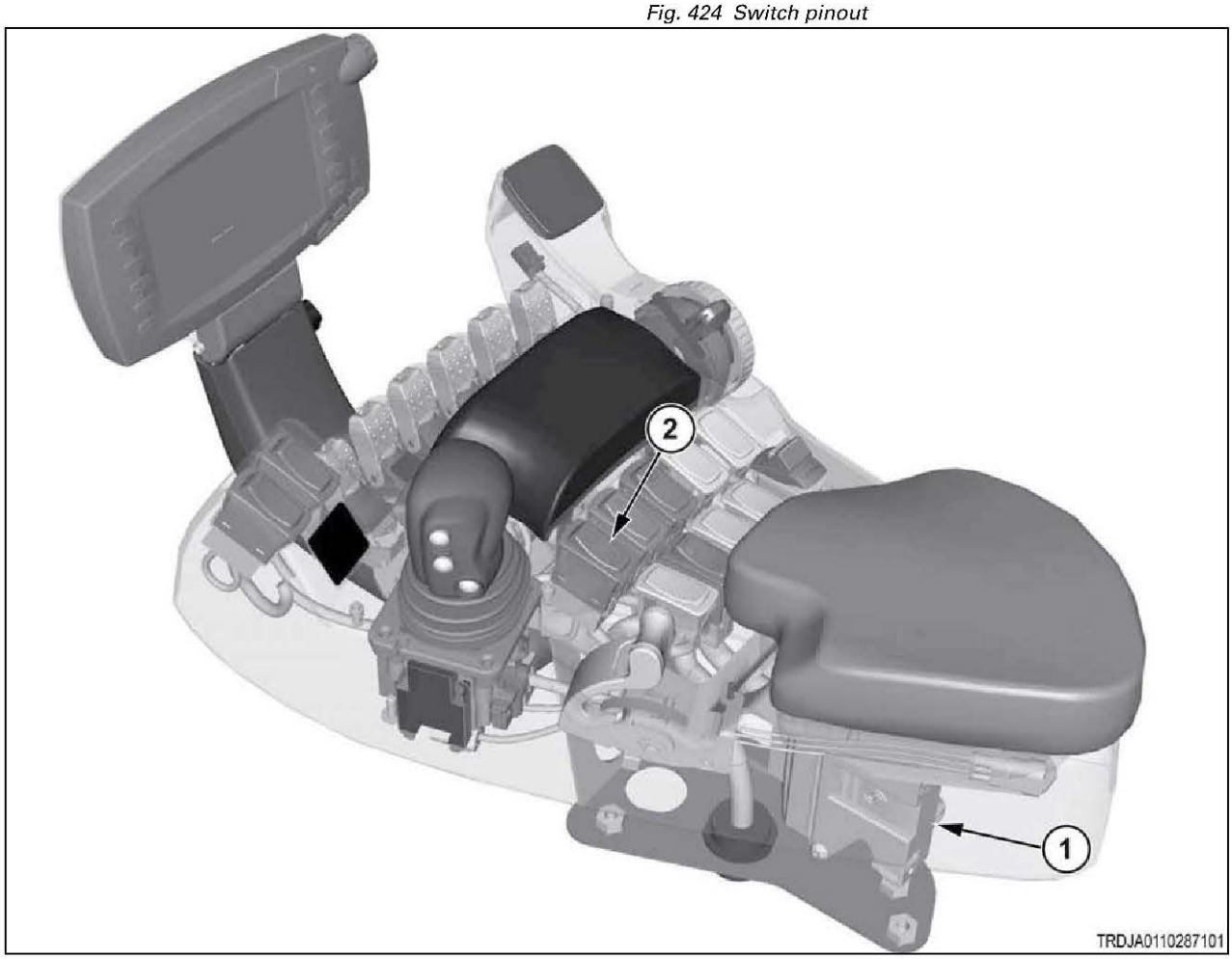

Fig. 425

(1)	Armrest module
(2)	Engine speed switch A/B

10.7.69 Code SA 05 SPN 2971 FMI 05

Open circuit in the engine speed B switch circuit.

The switch is a momentary double-pole, double-throw (DPDT) type switch, except the "common" terminal is the data output instead of a power source. The 4 other contacts are connected to 3.33-volt power and 1.66-volt power. Operating the switch selects one of these voltages for the signal output. One set of contacts is for engine speed A, and the other set is for engine speed B. These 2 power circuits are shared by several other function switches on the armrest. This knowledge can aid in diagnosing the fault.

Diagnosis and solution

1. Determine when this error is reported.

a) Turn the key start switch to the on position.

b) Check whether the error code is reported as you operate the switch between on and off states.

Result

- The error is reported only when the switch is in the off position.

  The open circuit is in the 3.33V power circuit.

  See step 2 to isolate the location.
- The error is reported only when the switch is in the on position.

  The open circuit is in the 1.66V power circuit.

  See step 2 to isolate the location.
- The error is reported regardless of switch position.

  The open circuit is in the signal circuit.

  Repair or replace the armrest harness.

  See step 3 to validate the repair.

2. Isolate the power circuit open circuit.

a) Operate all upstream (and at least one downstream) armrest switches, according to the list below, from their off to on positions.

Electrical sequence of switches, starting from the armrest module.

1. Shift Handle (3 pushbuttons)
2. Engine A/B switch
3. Autoguide switch
4. Creeper switch
5. Rear PTO
6. Roading Lock switch
7. Power management (cruise/full) switch
8. Hitch Raise/Work switch

b) Observe which other switches (if any) exhibit similar open circuit error codes.

Result

- At least one upstream switch reported a similar error.

  The open circuit lies at, or just upstream from, that switch.

  Repair or replace the armrest harness.

  See step 3 to validate the repair.

- Only downstream switches reported similar errors.

  The harness is open circuited at this switch location.

  Repair or replace the harness.

  See step 3 to validate the repair.
- No other switches reported similar errors.

  The switch is at fault.

  Replace the switch.

  See step 3 to validate the repair.

3. Check if the fault code remains.

a) Inspect and clean the harness connector contacts.
b) Connect all the connectors.
c) Turn the battery disconnect switch to the on position.
d) Turn the key start switch to the on position.
e) Operate the machine at low idle.
f) Check if the fault code remains.

Result

- SPN 2971 FMI 05 is not active.

  Stop.
- SPN 2971 FMI 05 is active.

  Failure of the armrest module is possible but not common. Exit the procedure and do the procedure again. If the fault code remains active, replace the armrest module.

  Stop.

10.7.69.1 Engine speed switch A/B electrical schematic

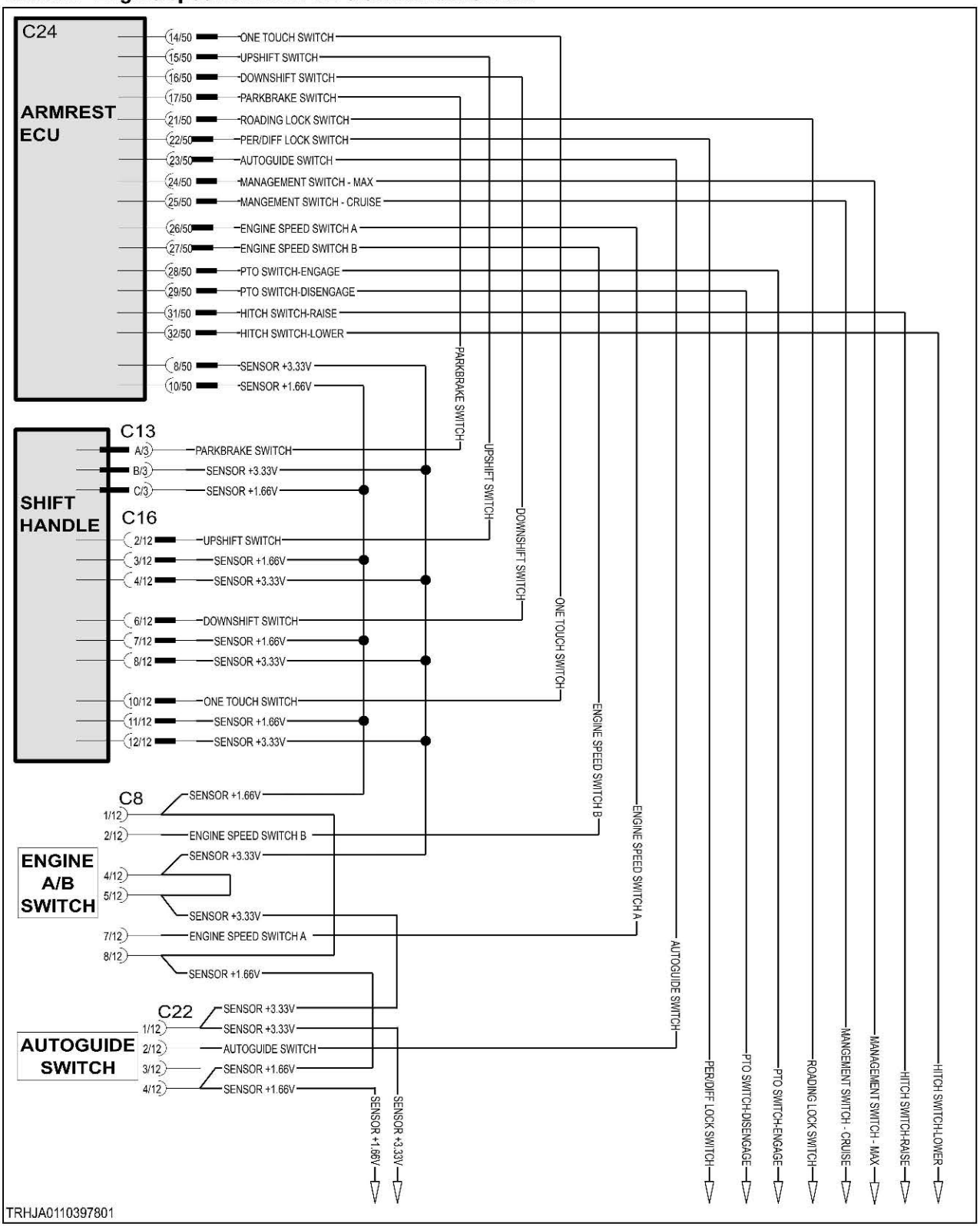

Fig. 426

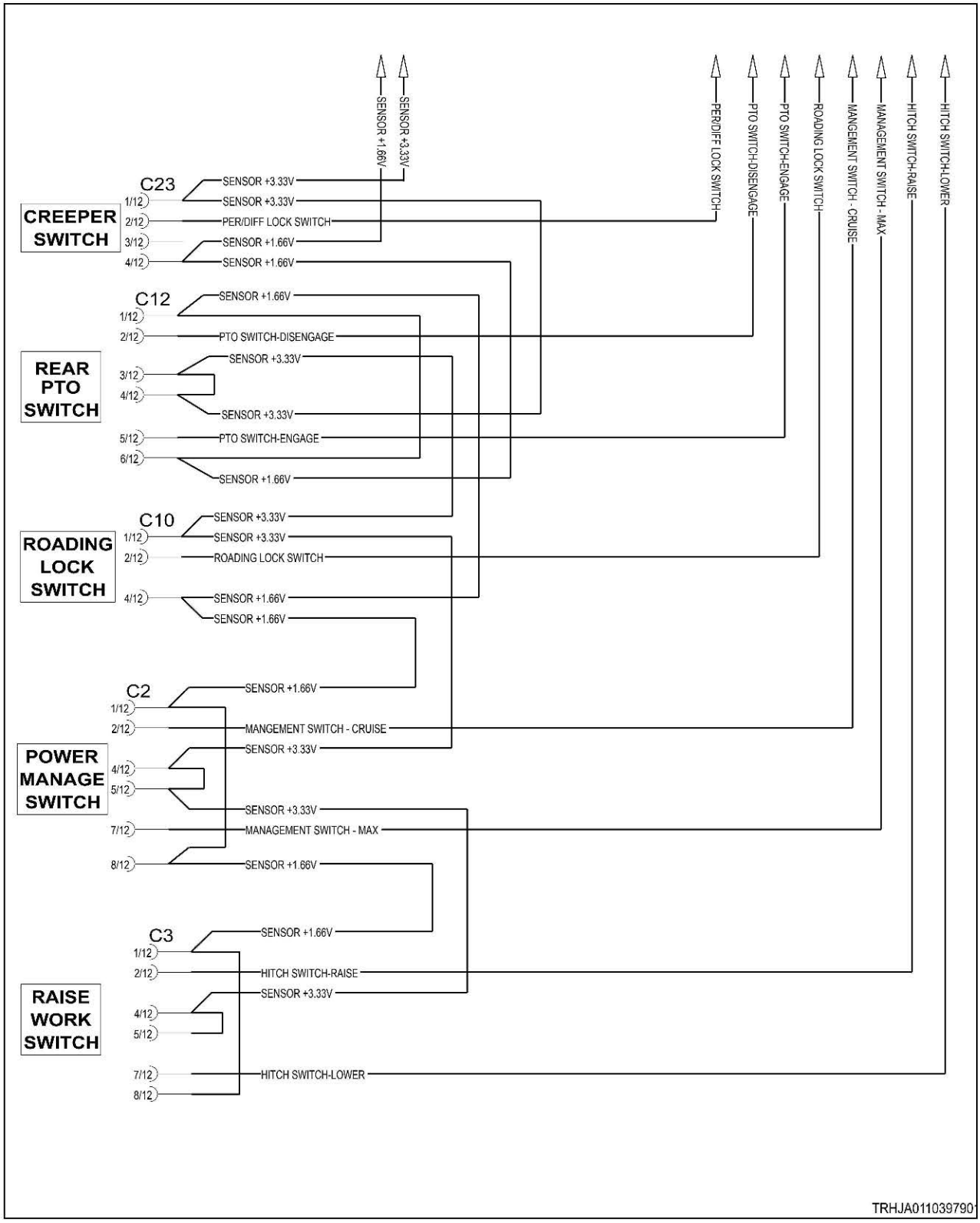
SENSOR +1.66V
SENSOR +3.33V
PER/DIFF LOCK SWITCH
PTO SWITCH-DISENGAGE
PTO SWITCH-ENGAGE
ROADING LOCK SWITCH
MANGEMENT SWITCH - CRUISE
MANAGEMENT SWITCH - MAX
HITCH SWITCH-RAISE
HITCH SWITCH-LOWER
CREEPER SWITCH
C23
1/12
2/12
3/12
4/12
SENSOR +3.33V
SENSOR +3.33V
PER/DIFF LOCK SWITCH
SENSOR +1.66V
SENSOR +1.66V
REAR PTO SWITCH
C12
1/12
2/12
3/12
4/12
5/12
6/12
SENSOR +1.66V
PTO SWITCH-DISENGAGE
SENSOR +3.33V
SENSOR +3.33V
PTO SWITCH-ENGAGE
SENSOR +1.66V
ROADING LOCK SWITCH
C10
1/12
2/12
4/12
SENSOR +3.33V
SENSOR +3.33V
ROADING LOCK SWITCH
SENSOR +1.66V
SENSOR +1.66V
POWER MANAGE SWITCH
C2
1/12
2/12
4/12
5/12
7/12
8/12
SENSOR +1.66V
MANGEMENT SWITCH - CRUISE
SENSOR +3.33V
SENSOR +3.33V
MANAGEMENT SWITCH - MAX
SENSOR +1.66V
RAISE WORK SWITCH
C3
1/12
2/12
4/12
5/12
7/12
8/12
SENSOR +1.66V
HITCH SWITCH-RAISE
SENSOR +3.33V
HITCH SWITCH-LOWER
TRHJA011039790

Fig. 427

10.7.69.2 Engine speed switch A/B



Fig. 428 Switch pinout

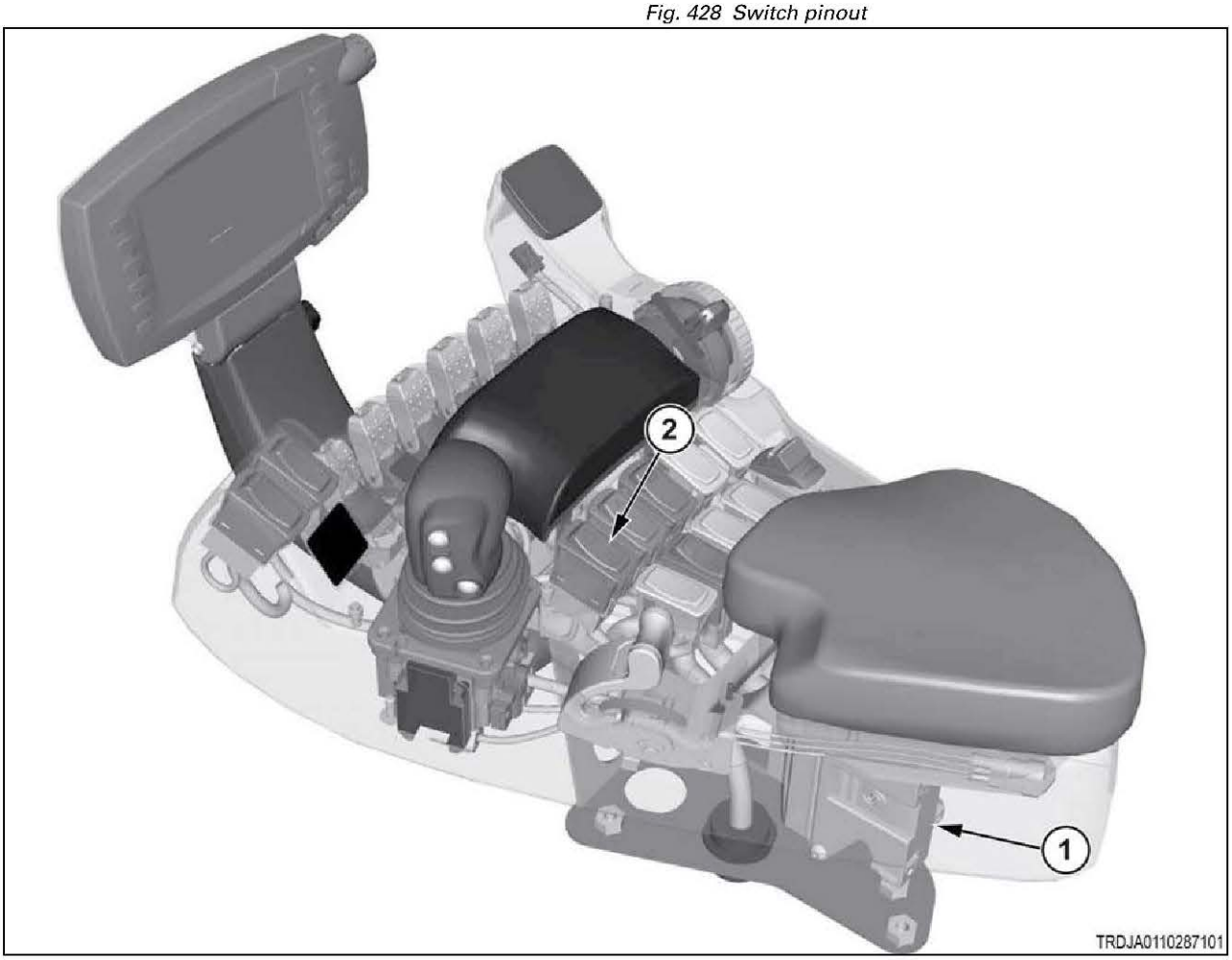

Fig. 429

(1)	Armrest module
(2)	Engine speed switch A/B

10.7.70 Code SA 05 SPN 3510 FMI 03

The 1.66 volt supply voltage is above normal.

The 1.66-volt power supply from the armrest module is above normal. The most likely cause is a short circuit to a higher voltage circuit.

The armrest module produces a 1.66-volt and 3.33-volt output power for the armrest switches. Each switch uses both power supplies. The 3.33-volt signal represents the off-state of the switch, and the 1.66-volt signal represents the on-state of the switch.

Diagnosis and solution

1. Isolate all switch signals from the 1.66V power circuit.

If one of the switch signal-returns back to the armrest module is the source of the short circuit, This error will appear if that switch is in the on-position, but not the off position.

a) Turn the key start switch to the on position.
b) Operate all switches to their off-position.

- Shift Handle, Park Brake Switch
- Engine A/B switch (move to center position)
- Autoguide switch
- Creeper switch
- Rear PTO (move to center position)
- Roading Lock switch
- Power management (cruise/full) switch (move to center position)
- Hitch Raise/Work switch (move to center position)

c) Check if the error code clears (or changes to SA 05 SPN 3511 FMI 03)

Result

- The error code cleared.

  Locate which switch cleared the code by turning them back on one at a time.

  Repair the switch signal circuit for that switch.

  See step 2 to verify the repair.
- The error code persists.

  The 1.66V circuit through all of the above switch locations is shorted to another voltage source.

  Repair or replace the harness.

  See step 2 to verify the repair.

2. Check if the diagnostic code remains.

a) Inspect and clean the harness connector contacts.
b) Connect all the connectors.
c) Turn the battery disconnect switch to the on position.
d) Turn the key start switch to the on position.
e) Operate the machine at low idle.
f) Check if the diagnostic code remains.

Result

- SPN 3510 FMI 03 is not active.

  Stop.

- SPN 3510 FMI 03 is active.

  Failure of the armrest module is possible but not common. Exit the procedure and do the procedure again. If the diagnostic code remains active, replace the module.

  Stop.

10.7.70.1 1.7 volt switch supply electrical schematic

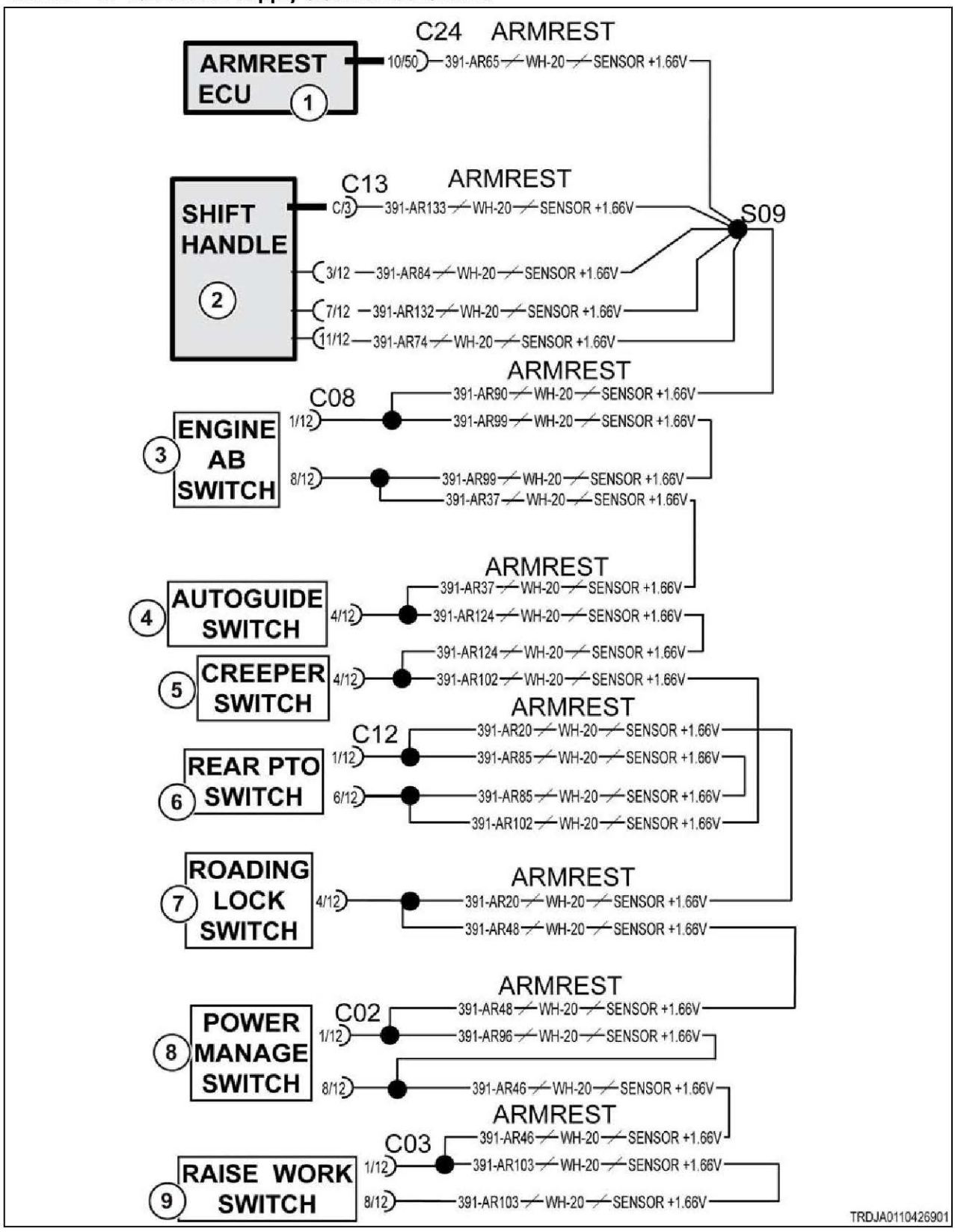

Fig. 430

Schematic legend		
Item	**Schematic term**	**Description**
1	ARMREST ECU	Armrest module
2	SHIFT HANDLE	Transmission control lever
3	ENGINE AB SWITCH	Engine speed switch A/B
4	AUTOGUIDE SWITCH	Auto-Guide™ switch
5	CREEPER SWITCH	Creeper switch
6	REAR PTO SWITCH	Rear fender power take-off switch
7	ROADING LOCK SWITCH	Roading lockout switch
8	POWER MANAGE SWITCH	Power management switch
9	RAISE WORK SWITCH	Hitch raise/lower switch
--	SENSOR +1.7V	Sensor +1.7 volts

1.7v and 3.3v schematics

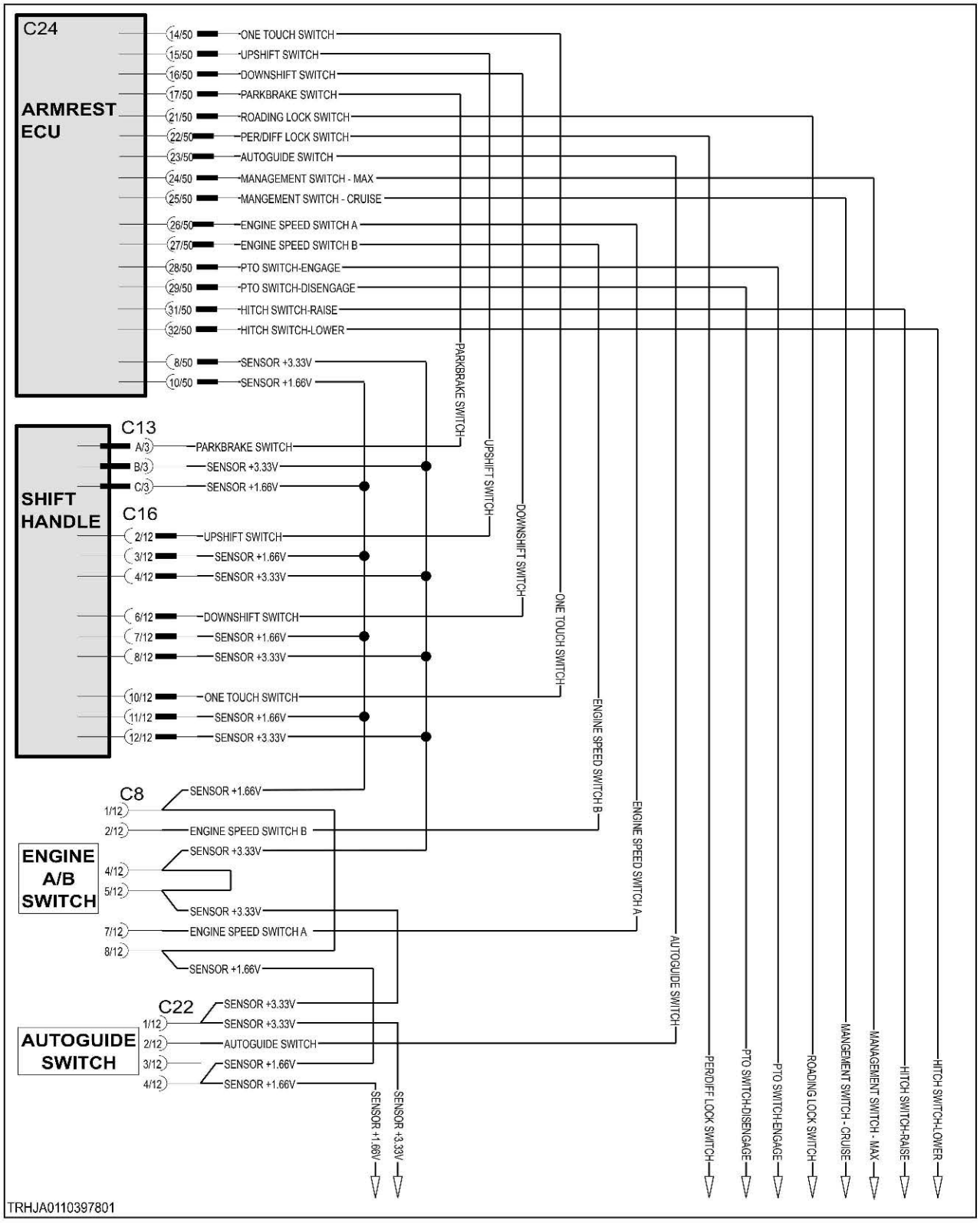

Fig. 431

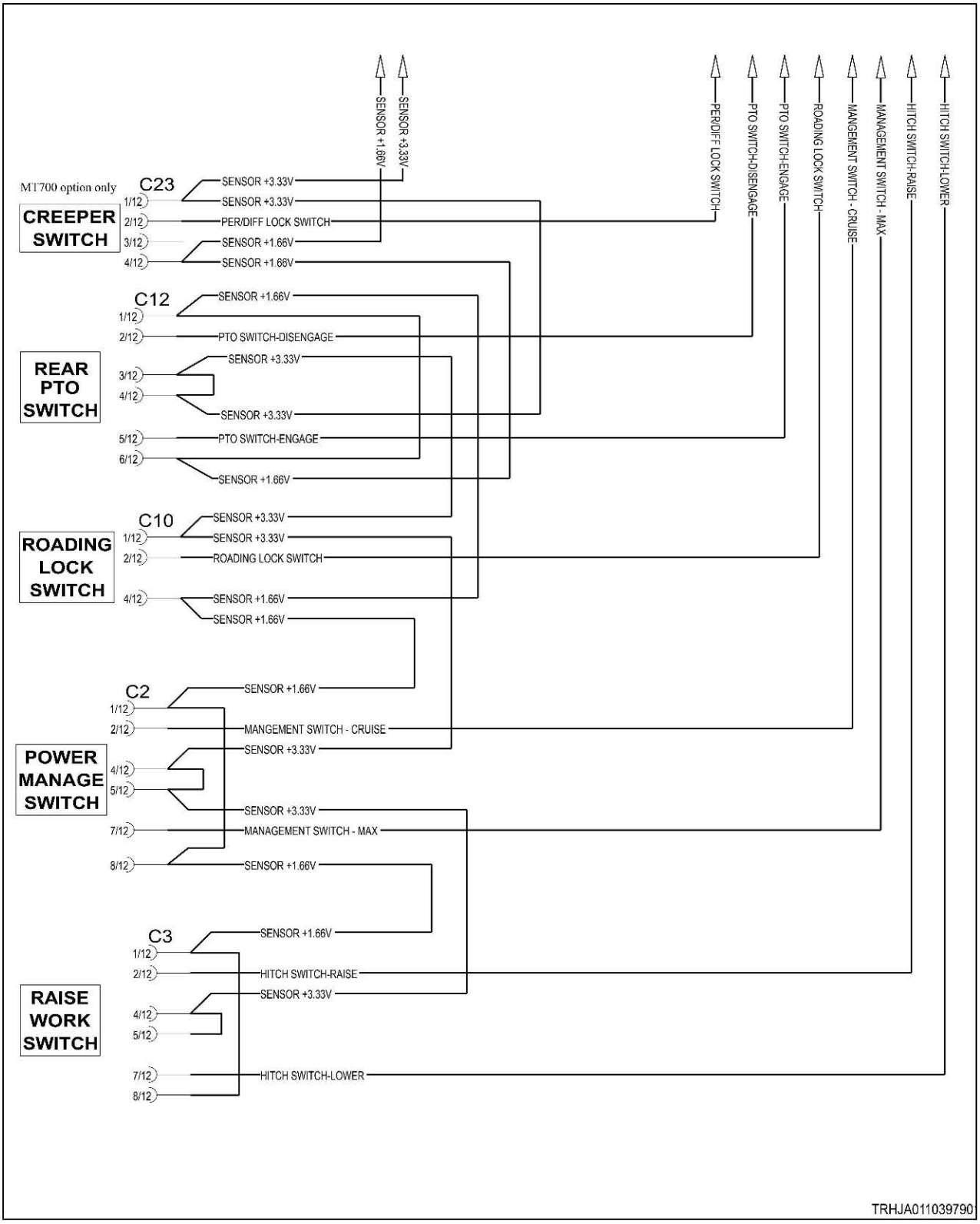
SENSOR +1.66V
SENSOR +3.33V
PER/DIFF LOCK SWITCH
PTO SWITCH-DISENGAGE
PTO SWITCH-ENGAGE
ROADING LOCK SWITCH
MANGEMENT SWITCH - CRUISE
MANAGEMENT SWITCH - MAX
HITCH SWITCH-RAISE
HITCH SWITCH-LOWER
MT700 option only
CREEPER SWITCH
C23
1/12 SENSOR +3.33V
2/12 SENSOR +3.33V
3/12 PER/DIFF LOCK SWITCH
4/12 SENSOR +1.66V
SENSOR +1.66V
C12
1/12 SENSOR +1.66V
2/12 PTO SWITCH-DISENGAGE
REAR PTO SWITCH
3/12 SENSOR +3.33V
4/12
SENSOR +3.33V
5/12 PTO SWITCH-ENGAGE
6/12
SENSOR +1.66V
C10
ROADING LOCK SWITCH
1/12 SENSOR +3.33V
SENSOR +3.33V
2/12 ROADING LOCK SWITCH
4/12 SENSOR +1.66V
SENSOR +1.66V
C2
1/12 SENSOR +1.66V
2/12 MANGEMENT SWITCH - CRUISE
POWER MANAGE SWITCH
SENSOR +3.33V
4/12
5/12
SENSOR +3.33V
7/12 MANAGEMENT SWITCH - MAX
8/12 SENSOR +1.66V
C3
SENSOR +1.66V
1/12
2/12 HITCH SWITCH-RAISE
SENSOR +3.33V
RAISE WORK SWITCH
4/12
5/12
7/12 HITCH SWITCH-LOWER
8/12
TRHJA011039790

Fig. 432

10.7.70.2 1.7 volt switch supply

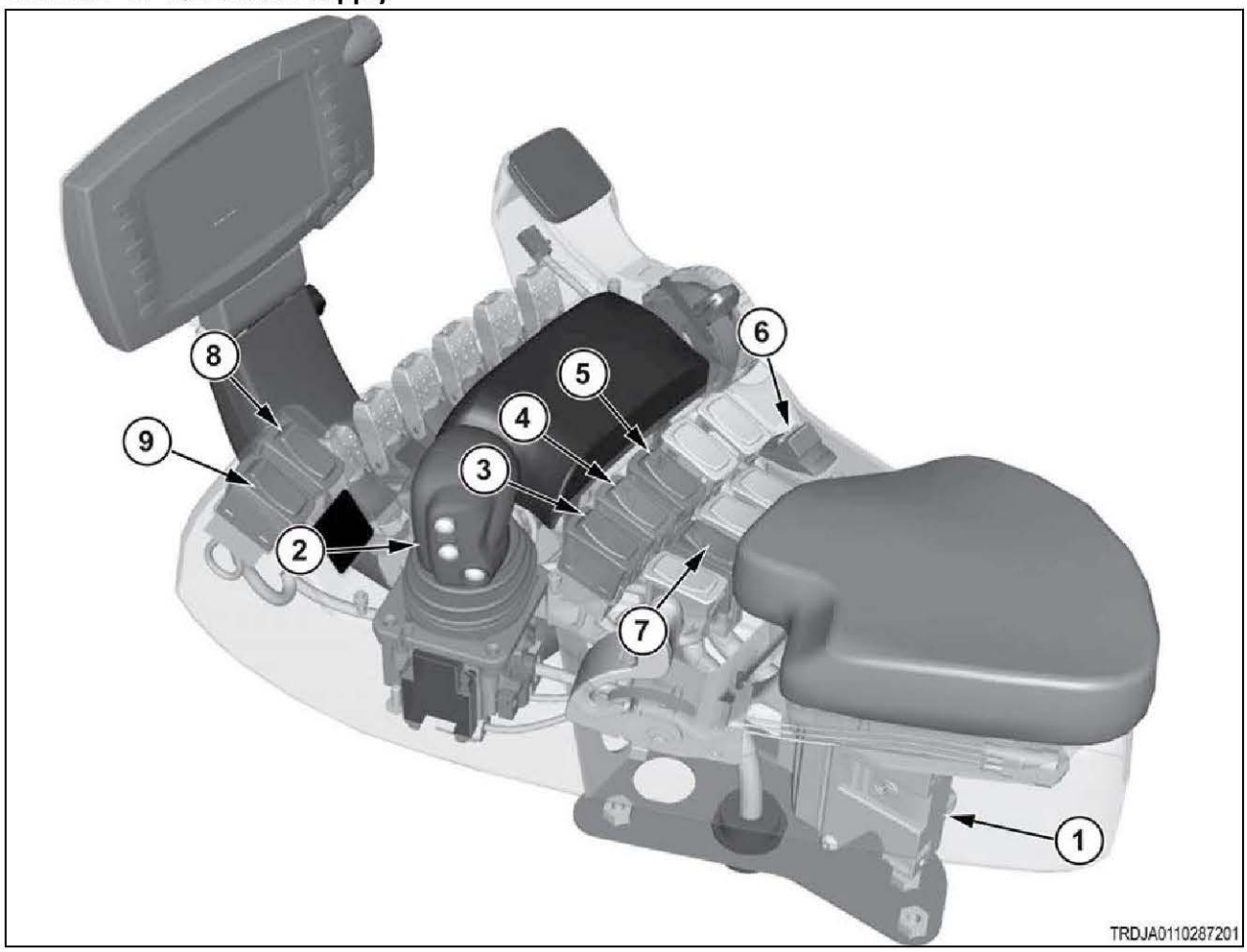

Fig. 433

(1)	Armrest module
(2)	Transmission control lever
(3)	Engine speed A/B switch
(4)	Auto-Guide™ switch
(5)	Roading switch
(6)	Creeper switch
(7)	Power take-off switch
(8)	Power management switch
(9)	Hitch raise/lower switch

10.7.71 Code SA 05 SPN 3510 FMI 04

The 1.66 volt supply voltage is below normal.

The 1.66-volt power supply from the armrest module is below normal. The most likely cause is a short circuit to ground.

The armrest module produces a 1.66-volt and 3.33-volt output power for the armrest switches. Each switch uses both power supplies. The 3.33-volt signal represents the off-state of the switch, and the 1.66-volt signal represents the on-state of the switch.

Diagnosis and solution

1. Isolate all switch signals from the 1.66V power circuit.

If one of the switch signal-returns back to the armrest module is the source of the short circuit, This error will appear if that switch is in the on-position, but not the off position.

a) Turn the key start switch to the on position.
b) Operate all switches to their off-position.

- Shift Handle, Park Brake Switch
- Engine A/B switch (move to center position)
- Autoguide switch
- Creeper switch
- Rear PTO (move to center position)
- Roading Lock switch
- Power management (cruise/full) switch (move to center position)
- Hitch Raise/Work switch (move to center position)

c) Check if the error code clears (or changes to SA 05 SPN 3511 FMI 04)

Result

- The error code cleared.

  Locate which switch cleared the code by turning them back on one at a time.

  Repair the switch signal circuit for that switch.

  See step 2 to verify the repair.
- The error code persists.

  The 1.66V circuit through all of the above switch locations is shorted to another voltage source.

  Repair or replace the harness.

  See step 2 to verify the repair.

2. Check if the diagnostic code remains.

a) Inspect and clean the harness connector contacts.
b) Connect all the connectors.
c) Turn the battery disconnect switch to the on position.
d) Turn the key start switch to the on position.
e) Operate the machine at low idle.
f) Check if the diagnostic code remains.

Result

- SPN 3510 FMI 04 is not active.

  Stop.
- SPN 3510 FMI 04 is active.

  Failure of the armrest module is possible but not common. Exit the procedure and do the procedure again. If the diagnostic code remains active, replace the module.

  Stop.

10.7.71.1 1.7 volt switch supply electrical schematic

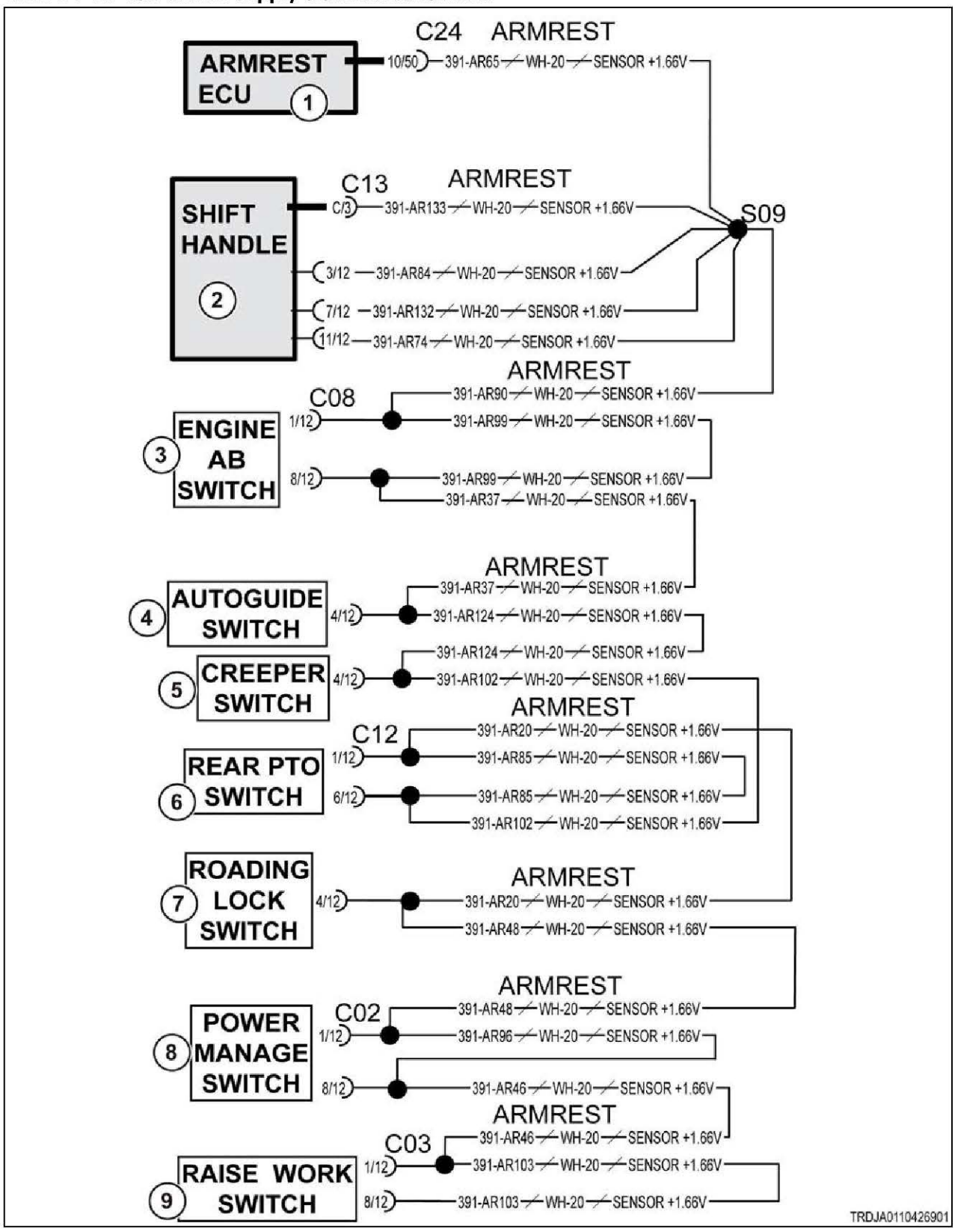

Fig. 434

Schematic legend		
Item	**Schematic term**	**Description**
1	ARMREST ECU	Armrest module
2	SHIFT HANDLE	Transmission control lever
3	ENGINE AB SWITCH	Engine speed switch A/B
4	AUTOGUIDE SWITCH	Auto-Guide™ switch
5	CREEPER SWITCH	Creeper switch
6	REAR PTO SWITCH	Rear fender power take-off switch
7	ROADING LOCK SWITCH	Roading lockout switch
8	POWER MANAGE SWITCH	Power management switch
9	RAISE WORK SWITCH	Hitch raise/lower switch
--	SENSOR +1.7V	Sensor +1.7 volts

1.7v and 3.3v schematics

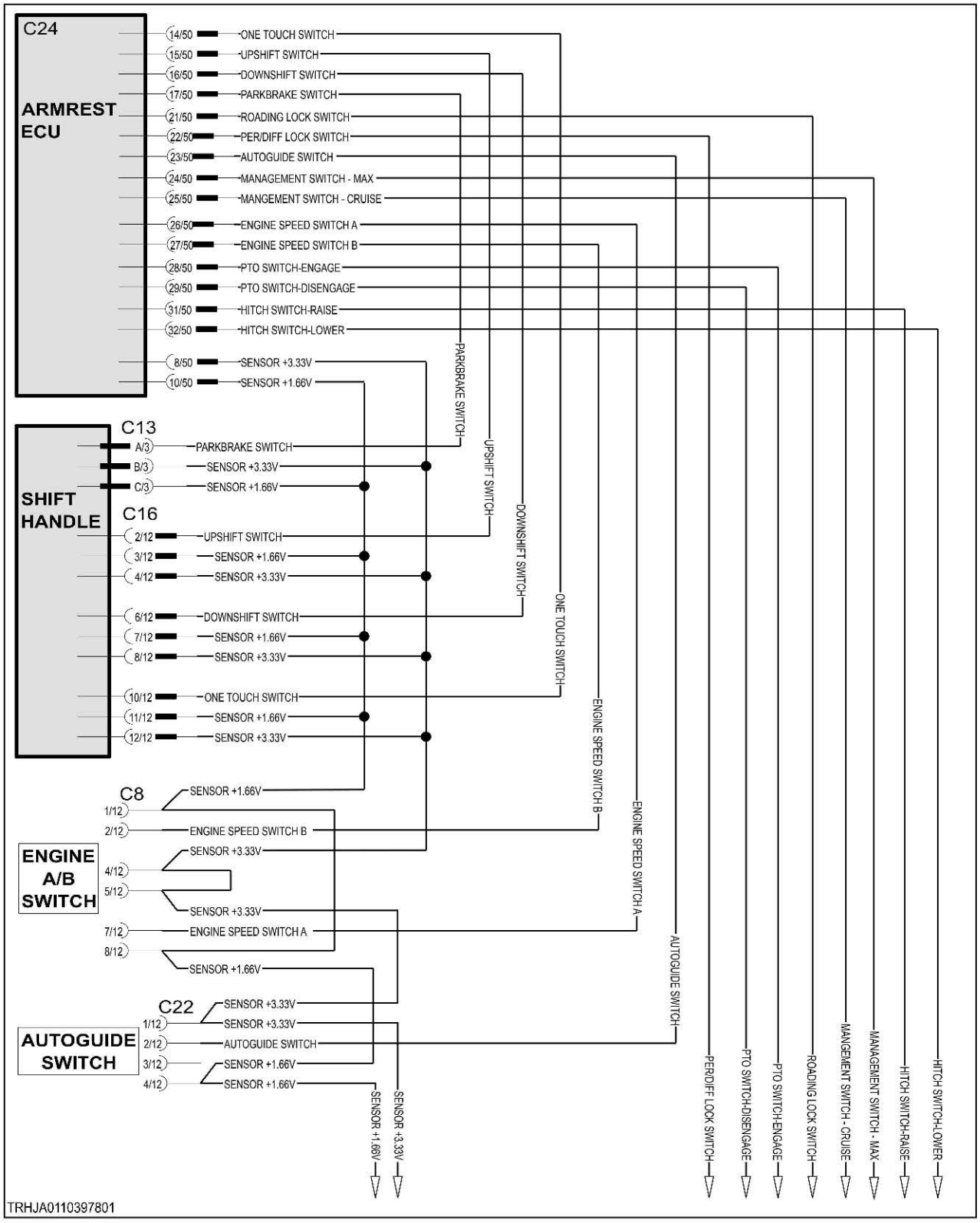

Fig. 435

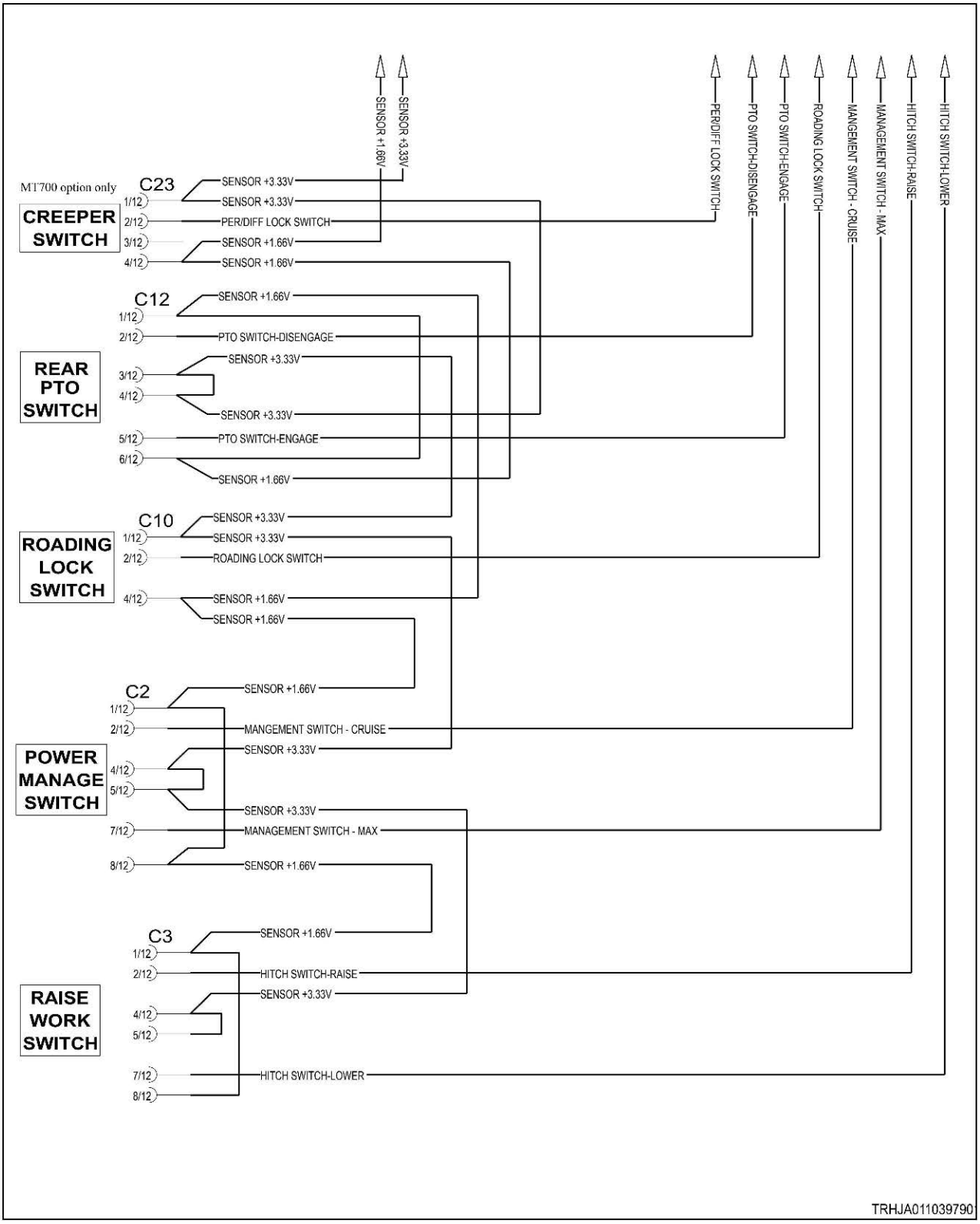
SENSOR +1.66V
SENSOR +3.33V
PER/DIFF LOCK SWITCH
PTO SWITCH-DISENGAGE
PTO SWITCH-ENGAGE
ROADING LOCK SWITCH
MANGEMENT SWITCH - CRUISE
MANAGEMENT SWITCH - MAX
HITCH SWITCH-RAISE
HITCH SWITCH-LOWER
MT700 option only
CREEPER SWITCH
C23
1/12 SENSOR +3.33V
2/12 SENSOR +3.33V
3/12 PER/DIFF LOCK SWITCH
4/12 SENSOR +1.66V
SENSOR +1.66V
REAR PTO SWITCH
C12
1/12 SENSOR +1.66V
2/12 PTO SWITCH-DISENGAGE
3/12 SENSOR +3.33V
4/12
SENSOR +3.33V
5/12 PTO SWITCH-ENGAGE
6/12
SENSOR +1.66V
ROADING LOCK SWITCH
C10
1/12 SENSOR +3.33V
SENSOR +3.33V
2/12 ROADING LOCK SWITCH
4/12 SENSOR +1.66V
SENSOR +1.66V
POWER MANAGE SWITCH
C2
1/12 SENSOR +1.66V
2/12 MANGEMENT SWITCH - CRUISE
SENSOR +3.33V
4/12
5/12
SENSOR +3.33V
7/12 MANAGEMENT SWITCH - MAX
8/12 SENSOR +1.66V
RAISE WORK SWITCH
C3
1/12 SENSOR +1.66V
2/12 HITCH SWITCH-RAISE
SENSOR +3.33V
4/12
5/12
7/12 HITCH SWITCH-LOWER
8/12
TRHJA011039790

Fig. 436

10.7.71.2 1.7 volt switch supply

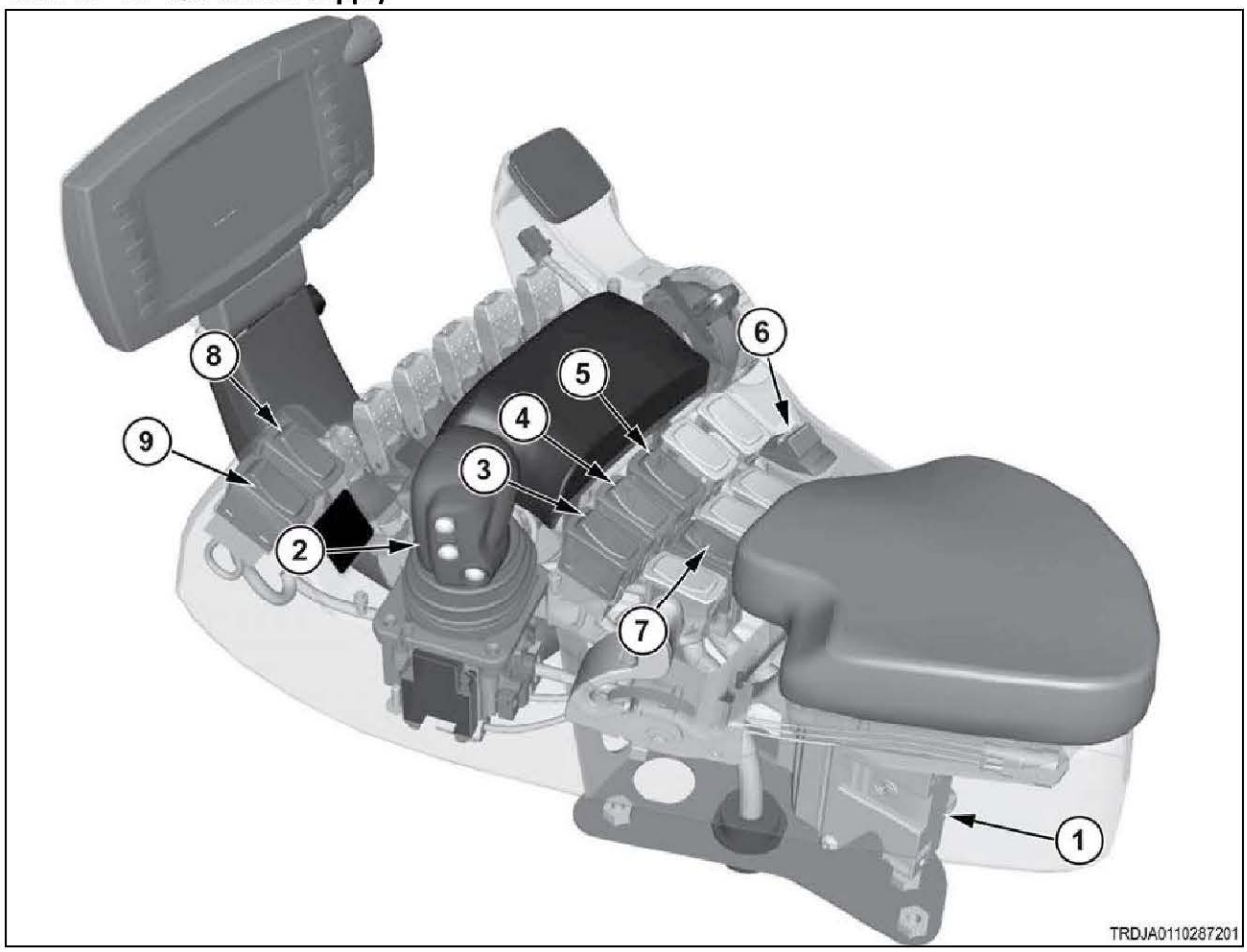

Fig. 437

(1)	Armrest module
(2)	Transmission control lever
(3)	Engine speed A/B switch
(4)	Auto-Guide™ switch
(5)	Roading switch
(6)	Creeper switch
(7)	Power take-off switch
(8)	Power management switch
(9)	Hitch raise/lower switch

10.7.72 Code SA 05 SPN 3511 FMI 03

The 3.33 volt supply voltage is above normal.

The 3.33-volt power supply from the armrest module is above normal. The most likely cause is a short circuit to a higher voltage circuit.

The armrest module produces a 1.66-volt and 3.33-volt output power for the armrest switches. Each switch uses both power supplies. The 3.33-volt signal represents the off-state of the switch, and the 1.66-volt signal represents the on-state of the switch.

Diagnosis and solution

1. Isolate each switch signal from the 3.33V power circuit.

If one of the switch signal-returns back to the armrest module is the source of the short circuit, This error will appear if that switch is in the off-position, but not the on-position.

a) Turn the key start switch to the on position.
b) While observing the error code, operate all switches to their on-position.

- Shift Handle, Park Brake Switch
- Shift handle, each of the 3 push button switches
- Engine A/B switch (move to A-position then B-position)
- Autoguide switch
- Creeper switch
- Rear PTO (move to engage-position then disengage-position)
- Roading Lock switch
- Power management switch (move to cruise-position then max power-position)
- Hitch Raise/Work switch (move to raise-position then lower-position)

c) Check if the error code clears (or changes to SA 05 SPN 3510 FMI 03)

Result

- The error code cleared while a switch was held in the on-position.

  Repair the switch signal circuit for that switch.

  See step 2 to verify the repair.
- The error code did not clear as the switches were operated.

  The 3.33V circuit through all of the above switch locations is shorted to another voltage source.

  Repair or replace the harness.

  See step 2 to verify the repair.

2. Check if the diagnostic code remains.

a) Inspect and clean the harness connector contacts.
b) Connect all the connectors.
c) Turn the battery disconnect switch to the on position.
d) Turn the key start switch to the on position.
e) Operate the machine at low idle.
f) Check if the diagnostic code remains.

Result

- SPN 3511 FMI 03 is not active.

  Stop.
- SPN 3511 FMI 03 is active.

  Failure of the armrest module is possible but not common. Exit the procedure and do the procedure again. If the diagnostic code remains active, replace the module.

  Stop.

10.7.72.1 3.3 volt switch supply electrical schematic

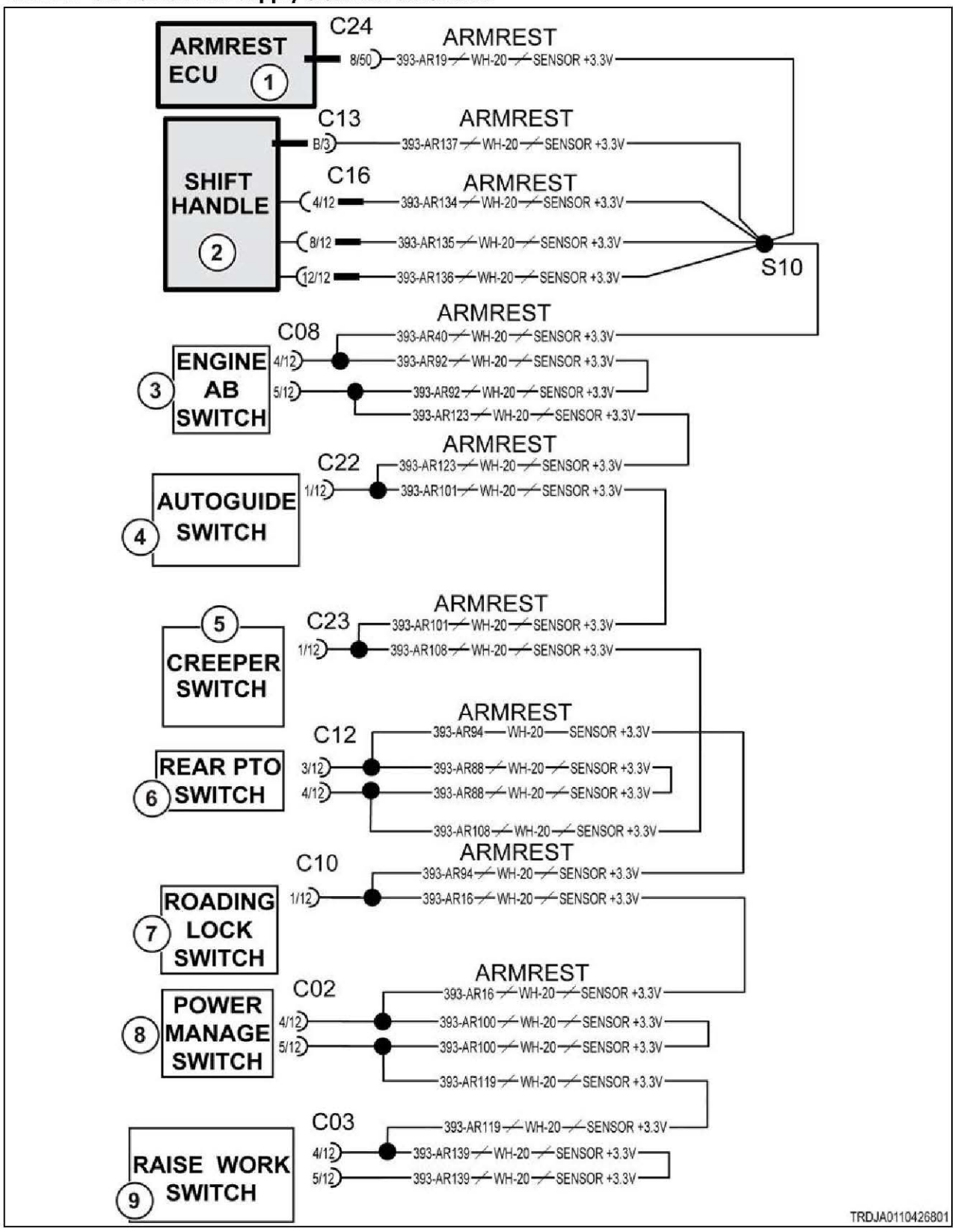

Fig. 438

Schematic legend		
Item	**Schematic term**	**Description**
1	ARMREST ECU	Armrest module
2	SHIFT HANDLE	Transmission control lever
3	ENGINE AB SWITCH	Engine speed switch A/B
4	AUTOGUIDE SWITCH	Auto-Guide™ switch
5	CREEPER SWITCH	Creeper switch
6	REAR PTO SWITCH	Rear fender power take-off switch
7	ROADING LOCK SWITCH	Roading lockout switch
8	POWER MANAGE SWITCH	Power management switch
9	RAISE WORK SWITCH	Hitch raise/lower switch
--	SENSOR +3.3V	Sensor +3.3 volts

1.7v and 3.3v schematics

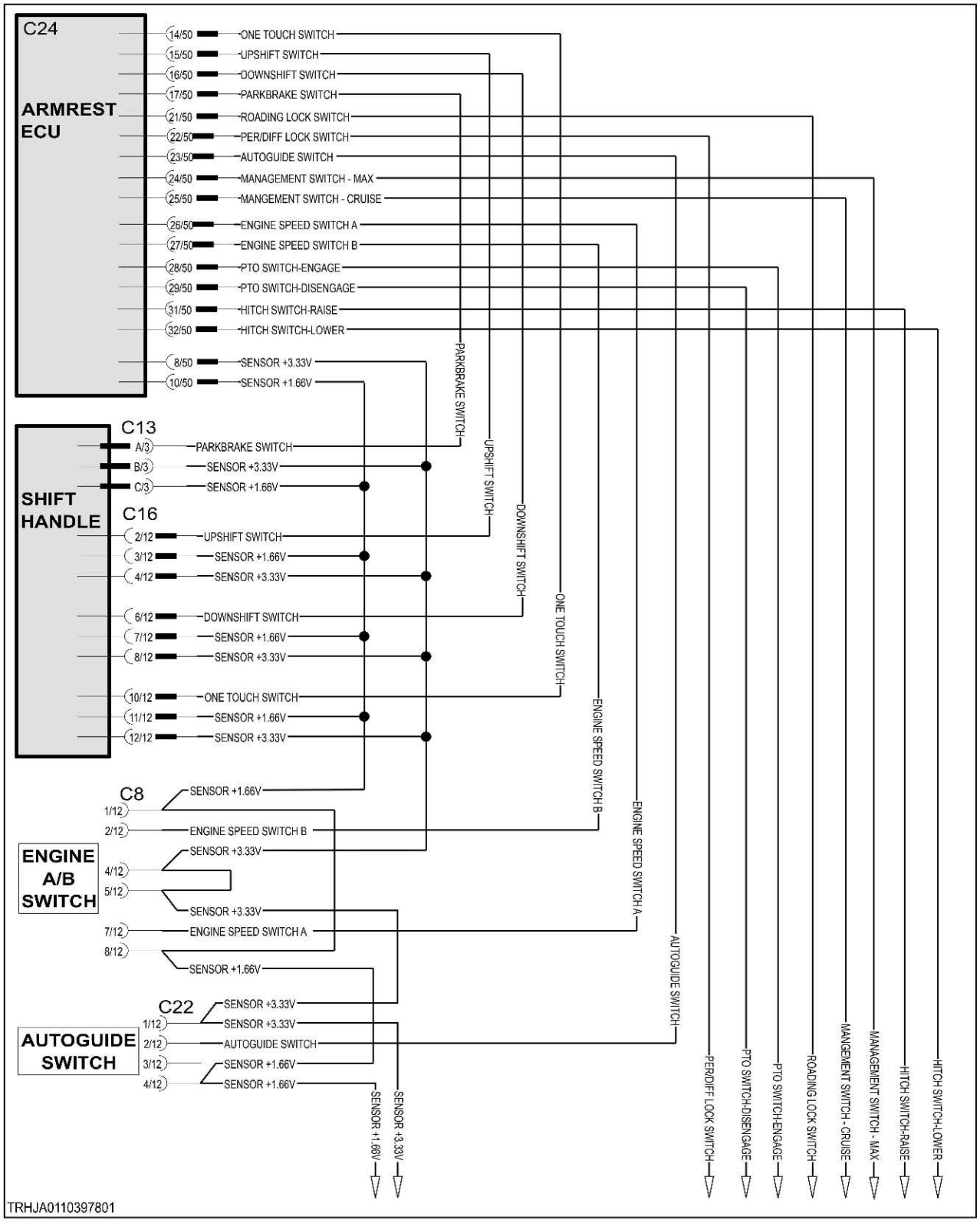

Fig. 439

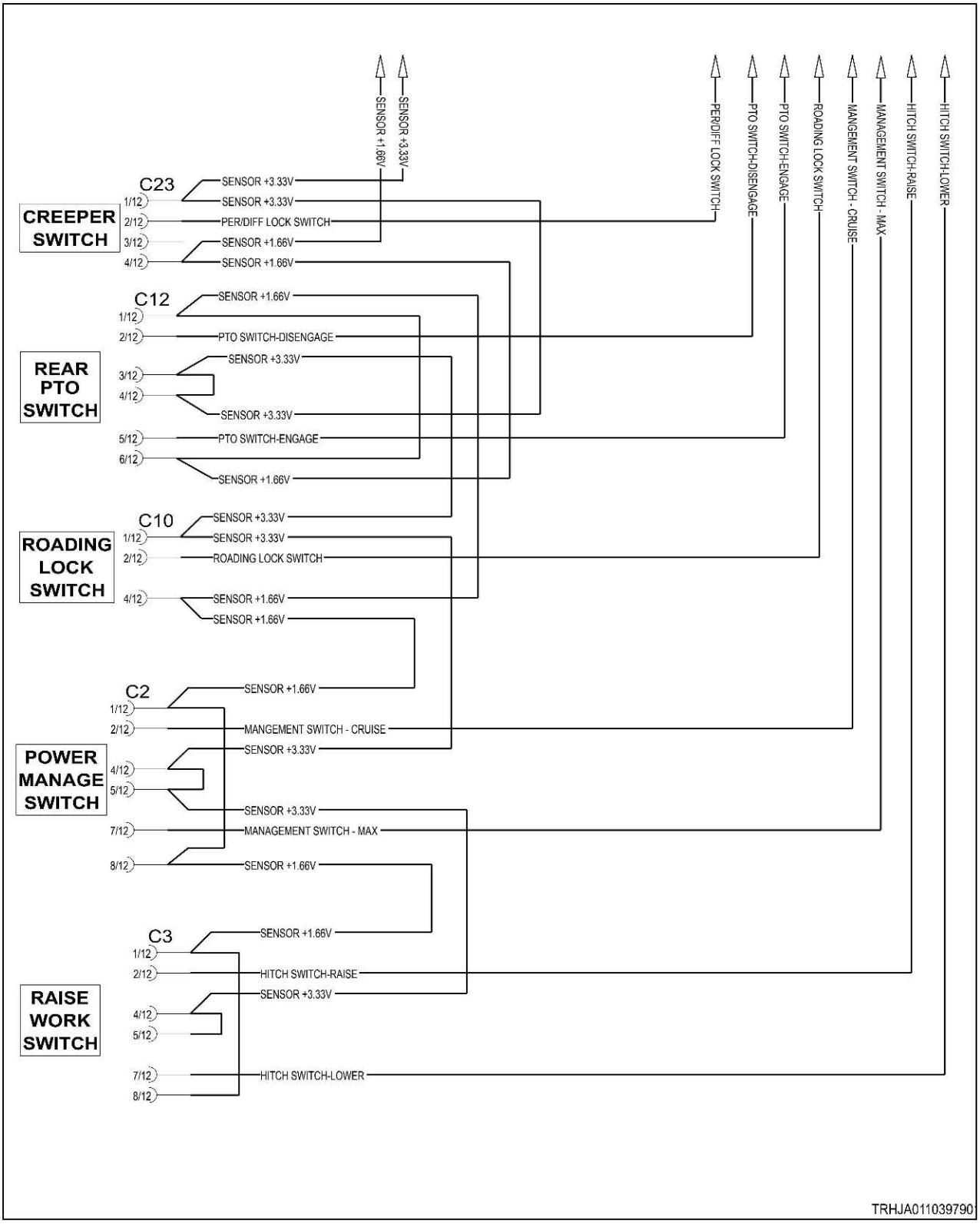
SENSOR +1.66V
SENSOR +3.33V
PER/DIFF LOCK SWITCH
PTO SWITCH-DISENGAGE
PTO SWITCH-ENGAGE
ROADING LOCK SWITCH
MANGEMENT SWITCH - CRUISE
MANAGEMENT SWITCH - MAX
HITCH SWITCH-RAISE
HITCH SWITCH-LOWER
CREEPER SWITCH
C23
1/12
2/12
3/12
4/12
SENSOR +3.33V
SENSOR +3.33V
PER/DIFF LOCK SWITCH
SENSOR +1.66V
SENSOR +1.66V
C12
REAR PTO SWITCH
1/12
2/12
3/12
4/12
5/12
6/12
SENSOR +1.66V
PTO SWITCH-DISENGAGE
SENSOR +3.33V
SENSOR +3.33V
PTO SWITCH-ENGAGE
SENSOR +1.66V
C10
ROADING LOCK SWITCH
1/12
2/12
4/12
SENSOR +3.33V
SENSOR +3.33V
ROADING LOCK SWITCH
SENSOR +1.66V
SENSOR +1.66V
C2
POWER MANAGE SWITCH
1/12
2/12
4/12
5/12
7/12
8/12
SENSOR +1.66V
MANGEMENT SWITCH - CRUISE
SENSOR +3.33V
SENSOR +3.33V
MANAGEMENT SWITCH - MAX
SENSOR +1.66V
C3
RAISE WORK SWITCH
1/12
2/12
4/12
5/12
7/12
8/12
SENSOR +1.66V
HITCH SWITCH-RAISE
SENSOR +3.33V
HITCH SWITCH-LOWER
TRHJA011039790

Fig. 440

10.7.72.2 3.3 volt switch supply

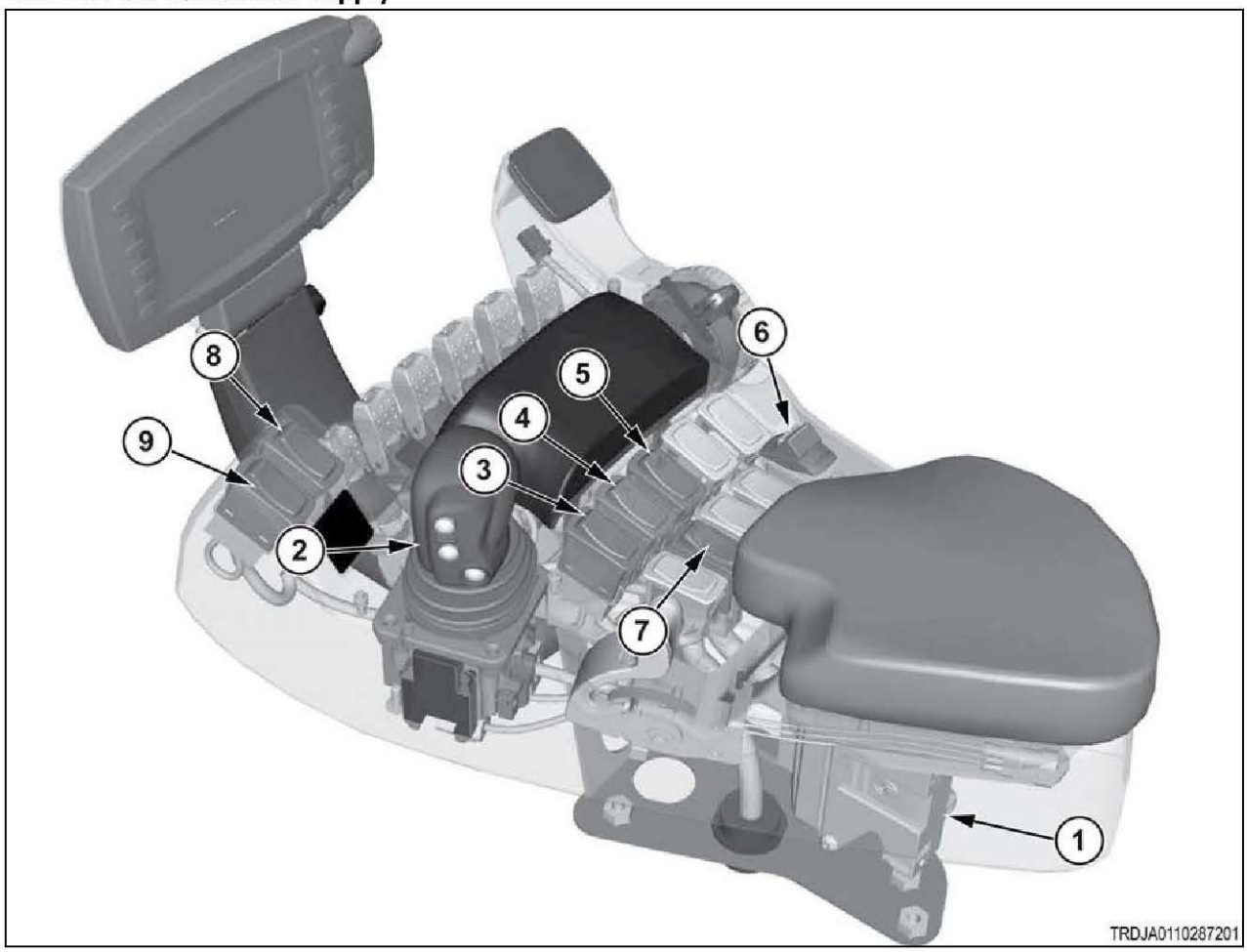

Fig. 441

(1)	Armrest module
(2)	Transmission control lever
(3)	Engine speed A/B switch
(4)	Auto-Guide™ switch
(5)	Roading switch
(6)	Creeper switch
(7)	Power take-off switch
(8)	Power management switch
(9)	Hitch raise/lower switch

10.7.73 Code SA 05 SPN 3511 FMI 04

The 3.33 volt supply voltage is below normal.

The 3.33-volt power supply from the armrest module is below normal. The most likely cause is a short circuit to ground.

The armrest module produces a 1.66-volt and 3.33-volt output power for the armrest switches. Each switch uses both power supplies. The 3.33-volt signal represents the off-state of the switch, and the 1.66-volt signal represents the on-state of the switch.

Diagnosis and solution

1. Isolate each switch signal from the 3.33V power circuit.

If one of the switch signal-returns back to the armrest module is the source of the short circuit, This error will appear if that switch is in the off-position, but not the on-position.

a) Turn the key start switch to the on position.
b) While observing the error code, operate all switches to their on-position.

- Shift Handle, Park Brake Switch
- Shift handle, each of the 3 push button switches
- Engine A/B switch (move to A-position then B-position)
- Autoguide switch
- Creeper switch
- Rear PTO (move to engage-position then disengage-position)
- Roading Lock switch
- Power management switch (move to cruise-position then max power-position)
- Hitch Raise/Work switch (move to raise-position then lower-position)

c) Check if the error code clears (or changes to SA 05 SPN 3510 FMI 04)

Result

- The error code cleared while a switch was held in the on-position.

  Repair the switch signal circuit for that switch.

  See step 2 to verify the repair.
- The error code did not clear as the switches were operated.

  The 3.33V circuit through all of the above switch locations is shorted to ground.

  Repair or replace the harness.

  See step 2 to verify the repair.

2. Check if the diagnostic code remains.

a) Inspect and clean the harness connector contacts.
b) Connect all the connectors.
c) Turn the battery disconnect switch to the on position.
d) Turn the key start switch to the on position.
e) Operate the machine at low idle.
f) Check if the diagnostic code remains.

Result

- SPN 3511 FMI 04 is not active.

  Stop.
- SPN 3511 FMI 04 is active.

  Failure of the armrest module is possible but not common. Exit the procedure and do the procedure again. If the diagnostic code remains active, replace the module.

  Stop.

10.7.73.1 3.3 volt switch supply electrical schematic

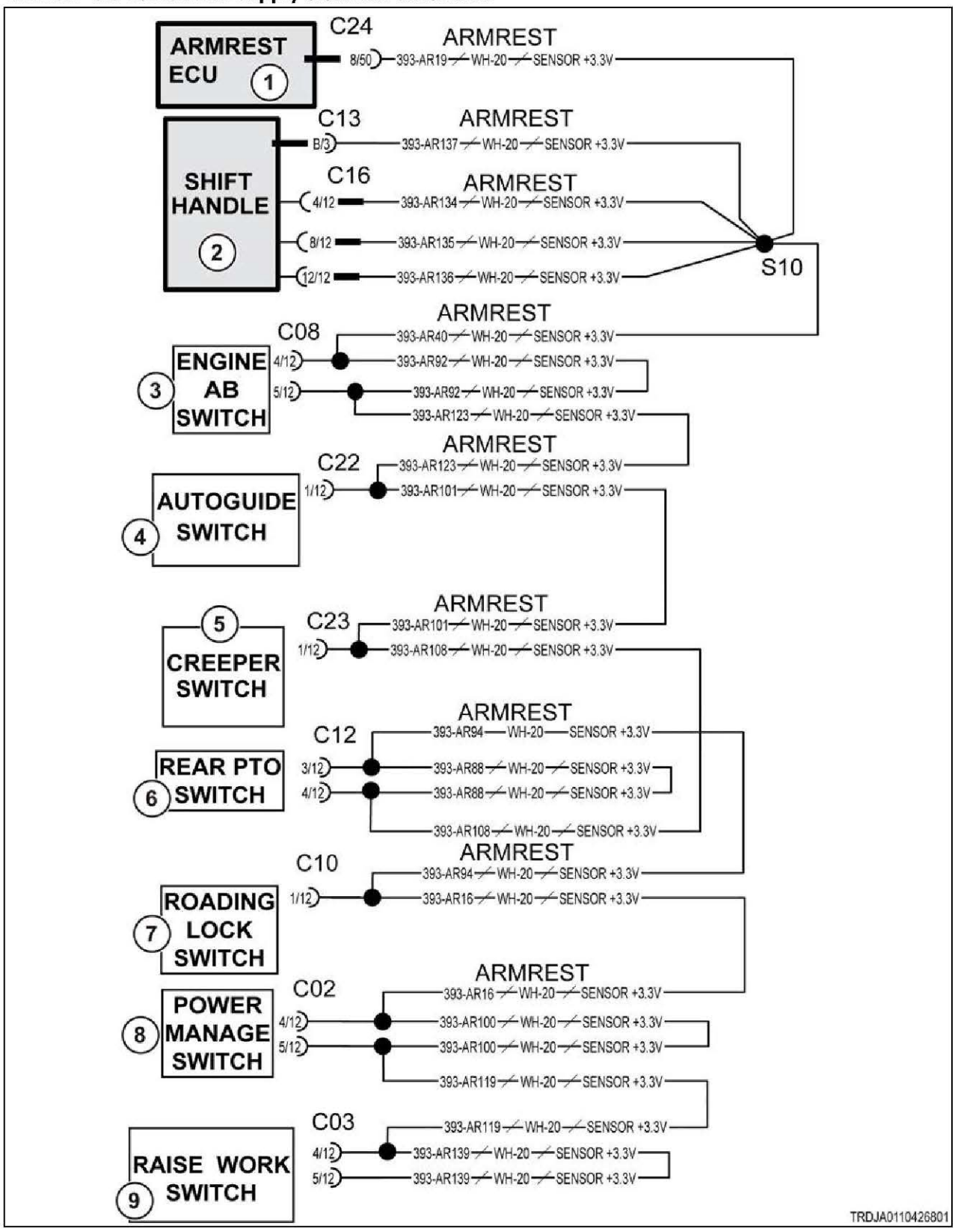

Fig. 442

Schematic legend		
Item	**Schematic term**	**Description**
1	ARMREST ECU	Armrest module
2	SHIFT HANDLE	Transmission control lever
3	ENGINE AB SWITCH	Engine speed switch A/B
4	AUTOGUIDE SWITCH	Auto-Guide™ switch
5	CREEPER SWITCH	Creeper switch
6	REAR PTO SWITCH	Rear fender power take-off switch
7	ROADING LOCK SWITCH	Roading lockout switch
8	POWER MANAGE SWITCH	Power management switch
9	RAISE WORK SWITCH	Hitch raise/lower switch
--	SENSOR +3.3V	Sensor +3.3 volts

1.7v and 3.3v schematics

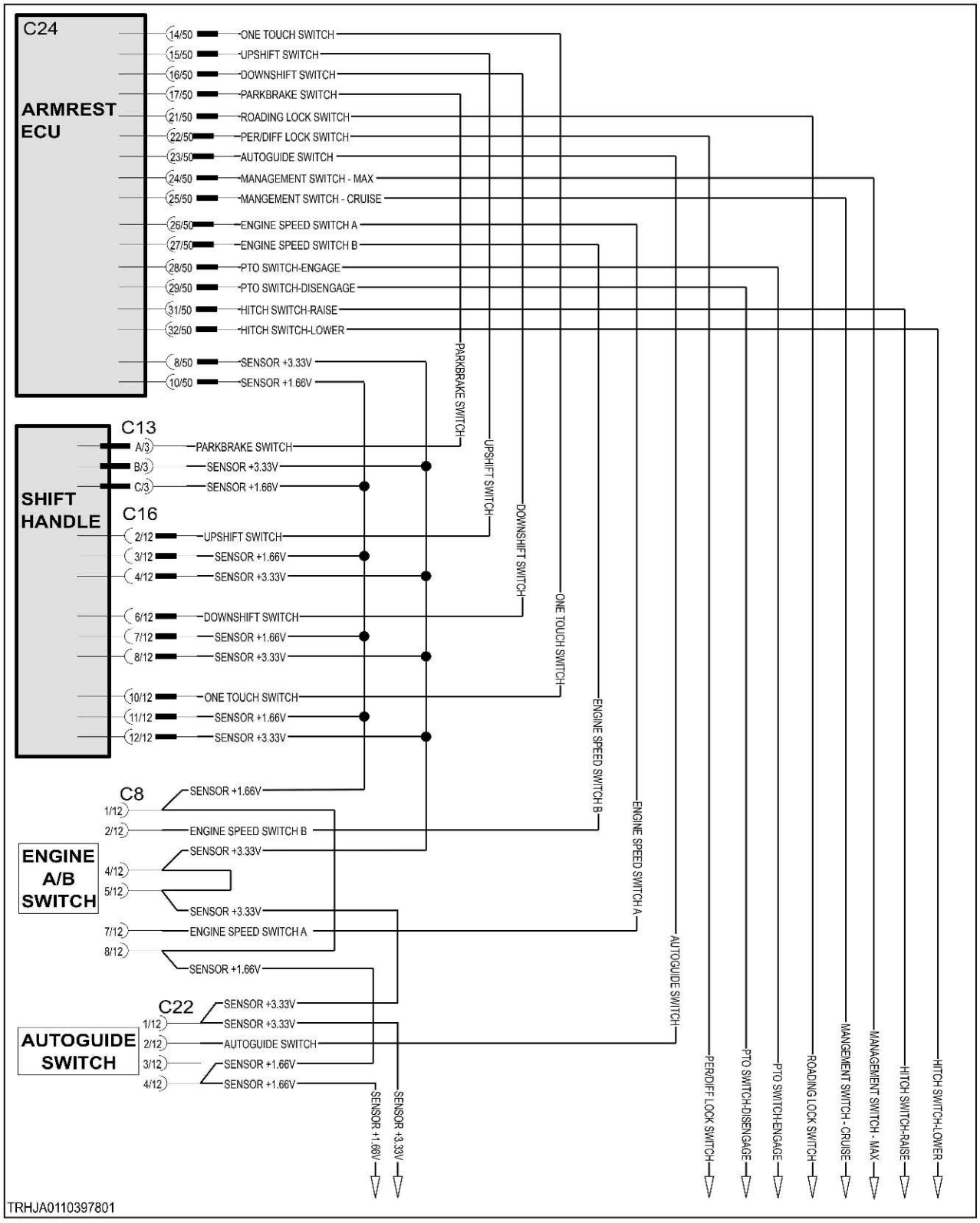

Fig. 443

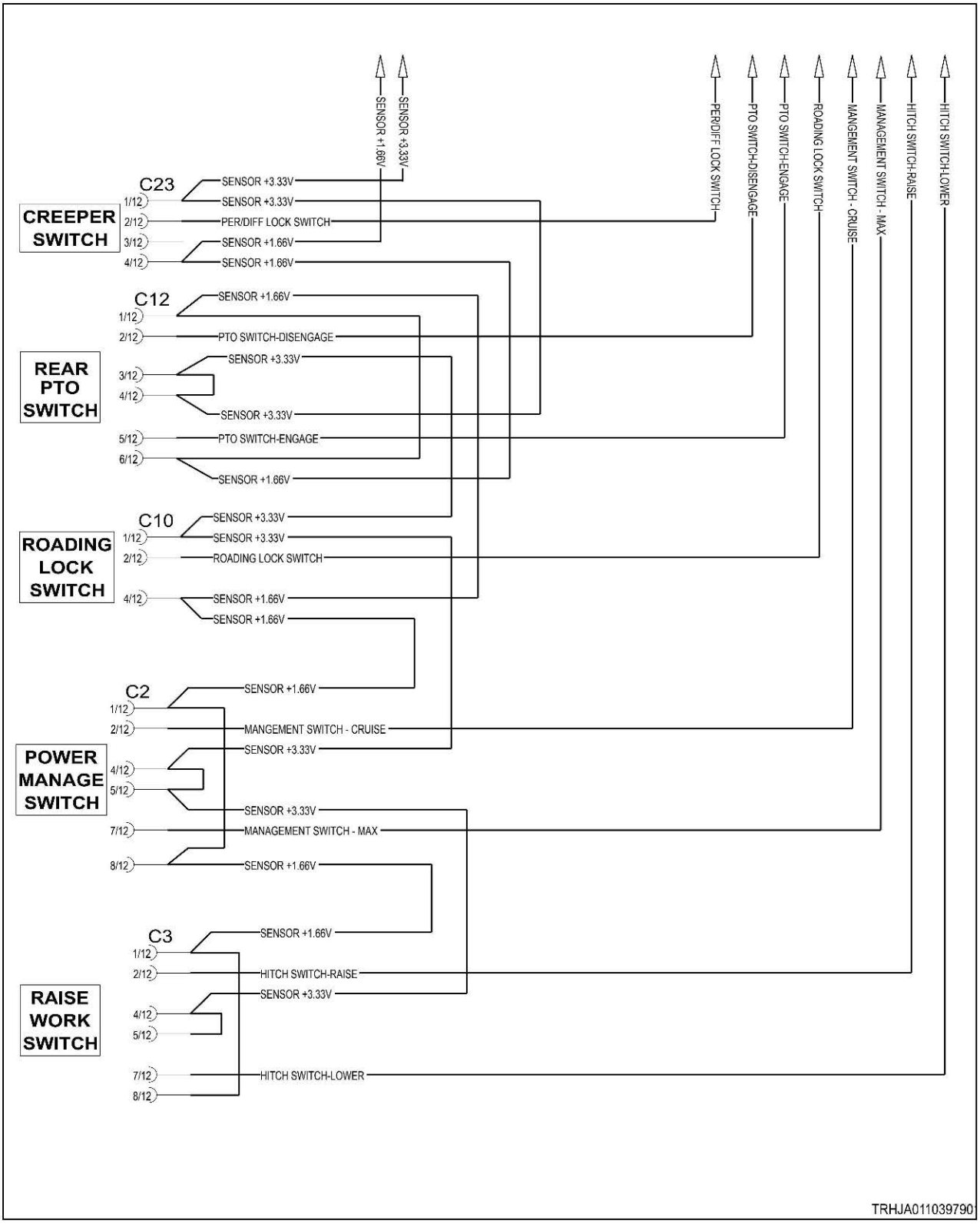
SENSOR +1.66V
SENSOR +3.33V
PER/DIFF LOCK SWITCH
PTO SWITCH-DISENGAGE
PTO SWITCH-ENGAGE
ROADING LOCK SWITCH
MANGEMENT SWITCH - CRUISE
MANAGEMENT SWITCH - MAX
HITCH SWITCH-RAISE
HITCH SWITCH-LOWER
CREEPER SWITCH
C23
1/12
2/12
3/12
4/12
SENSOR +3.33V
SENSOR +3.33V
PER/DIFF LOCK SWITCH
SENSOR +1.66V
SENSOR +1.66V
C12
REAR PTO SWITCH
1/12
2/12
3/12
4/12
5/12
6/12
SENSOR +1.66V
PTO SWITCH-DISENGAGE
SENSOR +3.33V
SENSOR +3.33V
PTO SWITCH-ENGAGE
SENSOR +1.66V
C10
ROADING LOCK SWITCH
1/12
2/12
4/12
SENSOR +3.33V
SENSOR +3.33V
ROADING LOCK SWITCH
SENSOR +1.66V
SENSOR +1.66V
C2
POWER MANAGE SWITCH
1/12
2/12
4/12
5/12
7/12
8/12
SENSOR +1.66V
MANGEMENT SWITCH - CRUISE
SENSOR +3.33V
SENSOR +3.33V
MANAGEMENT SWITCH - MAX
SENSOR +1.66V
C3
RAISE WORK SWITCH
1/12
2/12
4/12
5/12
7/12
8/12
SENSOR +1.66V
HITCH SWITCH-RAISE
SENSOR +3.33V
HITCH SWITCH-LOWER
TRHJA011039790

Fig. 444

10.7.73.2 3.3 volt switch supply

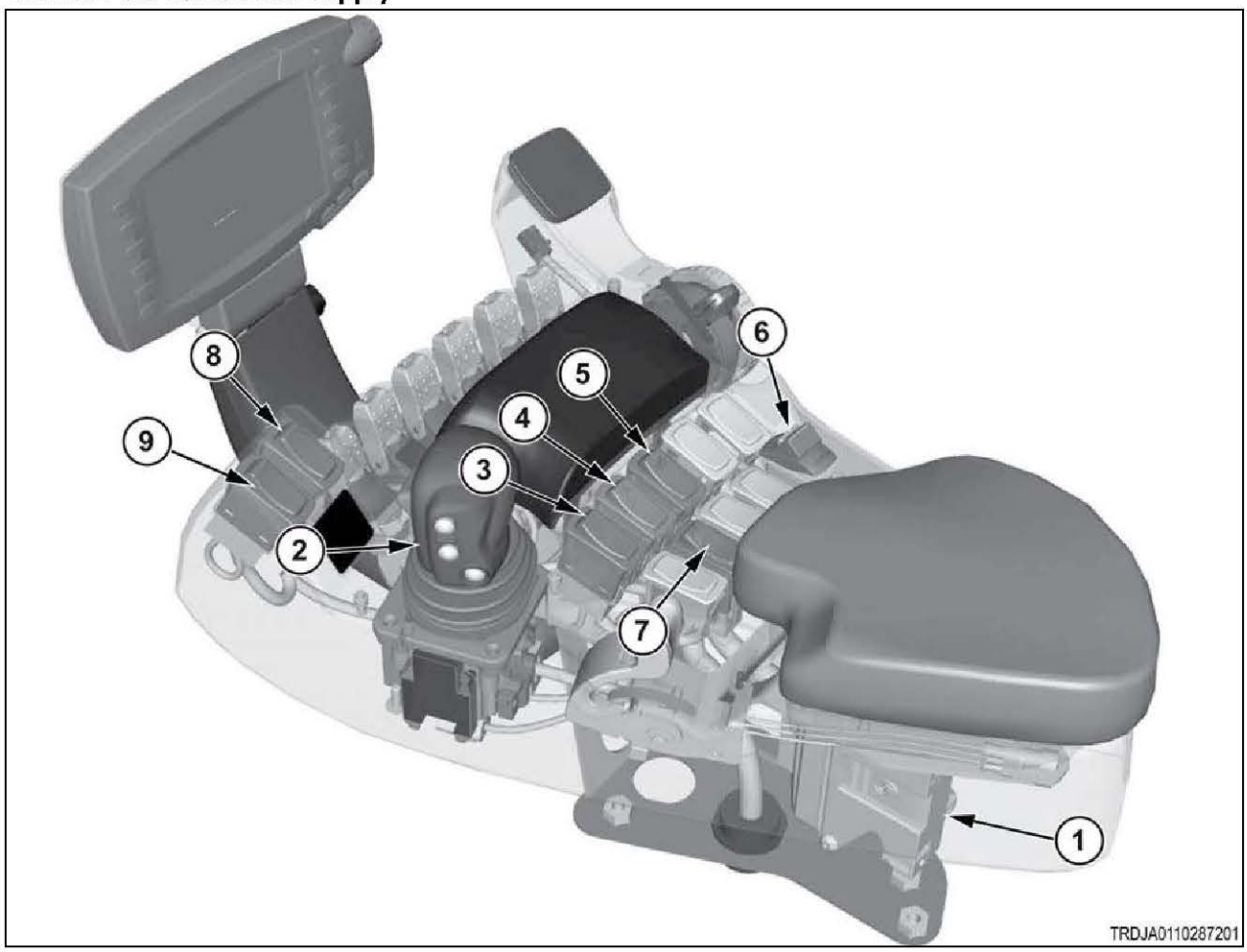

Fig. 445

(1)	Armrest module
(2)	Transmission control lever
(3)	Engine speed A/B switch
(4)	Auto-Guide™ switch
(5)	Roading switch
(6)	Creeper switch
(7)	Power take-off switch
(8)	Power management switch
(9)	Hitch raise/lower switch

10.7.74 Code SA 05 SPN 3646 FMI 02

The transmission control lever park brake switch signal is erratic, intermittent, or incorrect.

The switch is a single-pole, double-throw (SPDT) type switch, except the "common" terminal is the data output instead of a power source. The 2 other contacts are connected to 3.33-volt power and 1.66-volt

power. Operating the switch selects one of these voltages for the signal output. These 2 power circuits are shared by several other function switches on the armrest. This knowledge can aid in diagnosing the fault.

Diagnosis and solution

1. Check the function of downstream switches that share power circuits.

This will help isolate whether the problem is in the power or signal circuit.

a) Turn the key start switch to the on position.
b) Operate the engine A/B speed switch in both directions.
c) Check for additional error codes.

Result

- SA 05 SPN 2970 FMI 02 or SA 05 SPN 2971 FMI 02 (engine speed) errors are reported.

  Focus further examination on the power circuits between the transmission control lever and the armrest controller.

  See step 2 to check for loose connections.
- No additional error codes are reported.

  The power circuits are not suspect.

  Focus further examination on the switch signal output.

  See step 2 to check for loose connections.

2. Inspect all harness and switch connections.

a) Turn the key start switch to the off position.
b) Turn the battery disconnect switch to the off position.
c) Open the top of the armrest console.
d) Inspect and clean all connectors and connector contacts:

- Look for bent or worn pins.
- Look for deformed or oversized sockets.
- Look for corrosion on the pins and sockets. Corrosion is a sign of a loose connection.
- Look for signs of overheating. Overheating is a sign of a poor connection, and can further loosen the pin or socket mount. The whole connector body should be replaced.

e) Make sure to inspect the circuits identified in step 1 as they pass through the following connector locations:

- Switch signal at the armrest ECU C24-17.
- All contacts at the park brake switch.
- The 1.66V and 3.33V power signals at the Armrest ECU C24-8 (3.33V) and C24-10 (1.66V)

f) Repair or replace any connector or harness found faulty.

Result

- No faulty contacts were found.

  See step 3 to check the switch function.
- Faulty contacts were found and repaired.

  See step 4 to validate the repair.

3. Check the switch function.

a) Disconnect the park brake switch.
b) Check resistance between contacts A & B and A & C, as you operate the switch from on and off.

- In the on-position, contacts A and C should have continuity.
- In the off-position, contacts A and B should have continuity.

Result

- Continuity checks are correct.

  See step 4 to check if the error persists.
- Continuity checks are incorrect.

  Replace the switch.

  See step 4 to validate the repair.

4. Check if the fault code remains.

a) Inspect and clean the harness connector contacts.
b) Connect all the connectors.
c) Turn the battery disconnect switch to the on position.
d) Turn the key start switch to the on position.
e) Operate the machine at low idle.
f) Check if the fault code remains.

Result

- SPN 3646 FMI 02 is not active.

  Stop.
- SPN 3646 FMI 02 is active.

  Failure of the armrest module is possible but not common. Exit the procedure and do the procedure again. If the fault code remains active, replace the armrest module.

  Stop.

10.7.74.1 Transmission control lever electrical schematic

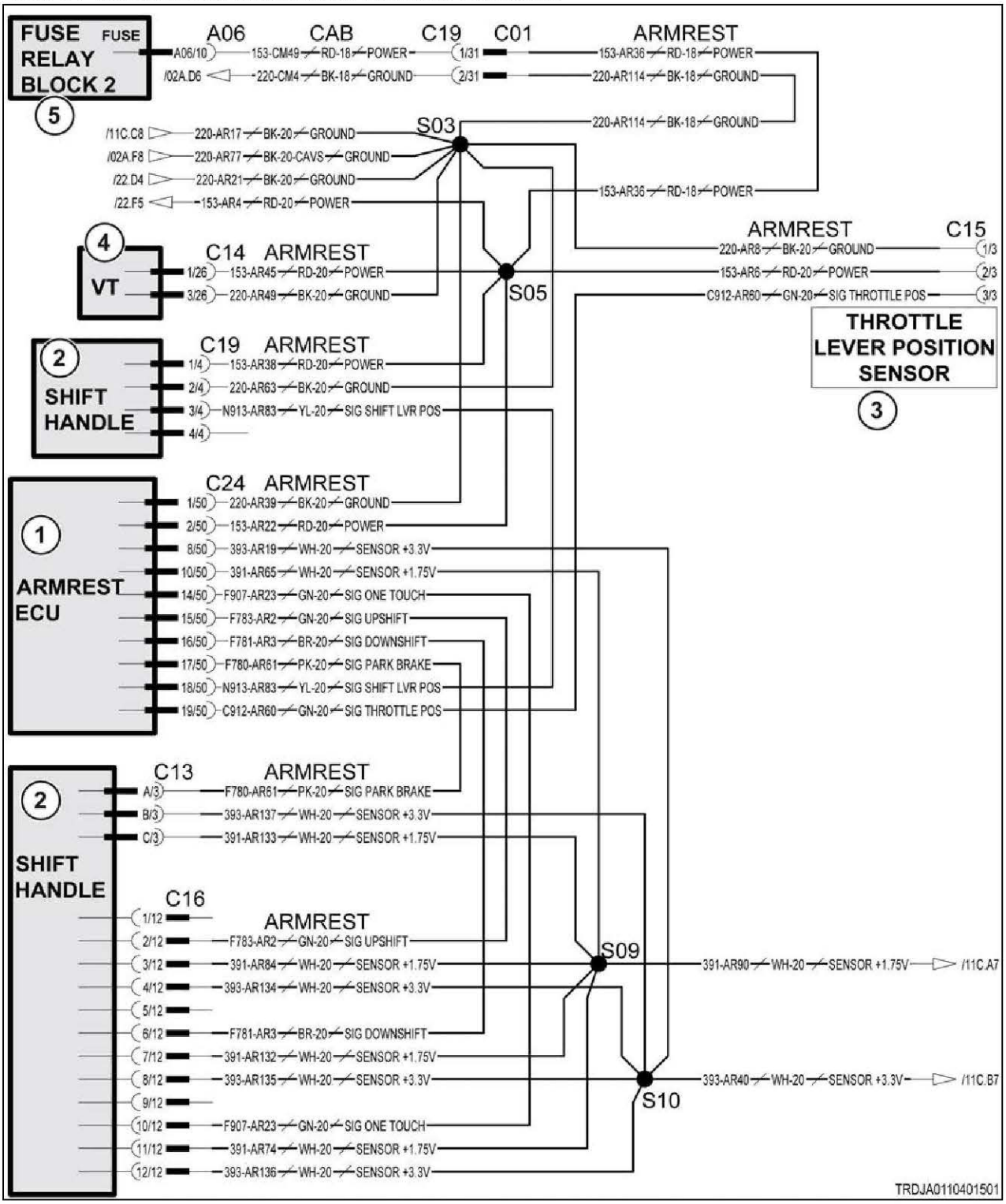

Fig. 446

Schematic legend		
Item	**Schematic term**	**Description**
1	ARMREST ECU	Armrest module
2	SHIFT HANDLE	Transmission control lever
3	THROTTLE LEVER POSITION SENSOR	Throttle lever position sensor
4	VT	Virtual terminal
5	FUSE RELAY BLOCK 2	Fuse relay block 2
--	SIG THROTTLE POS	Signal throttle position
--	SIG UPSHIFT	Signal upshift
--	SIG DOWNSHIFT	Signal downshift
--	SIG ONE TOUCH	Signal one touch
--	SIG PARK BRAKE	Signal park brake
--	SIG SHIFT LVR POSITION	Signal transmission control lever

1.7v and 3.3v schematics

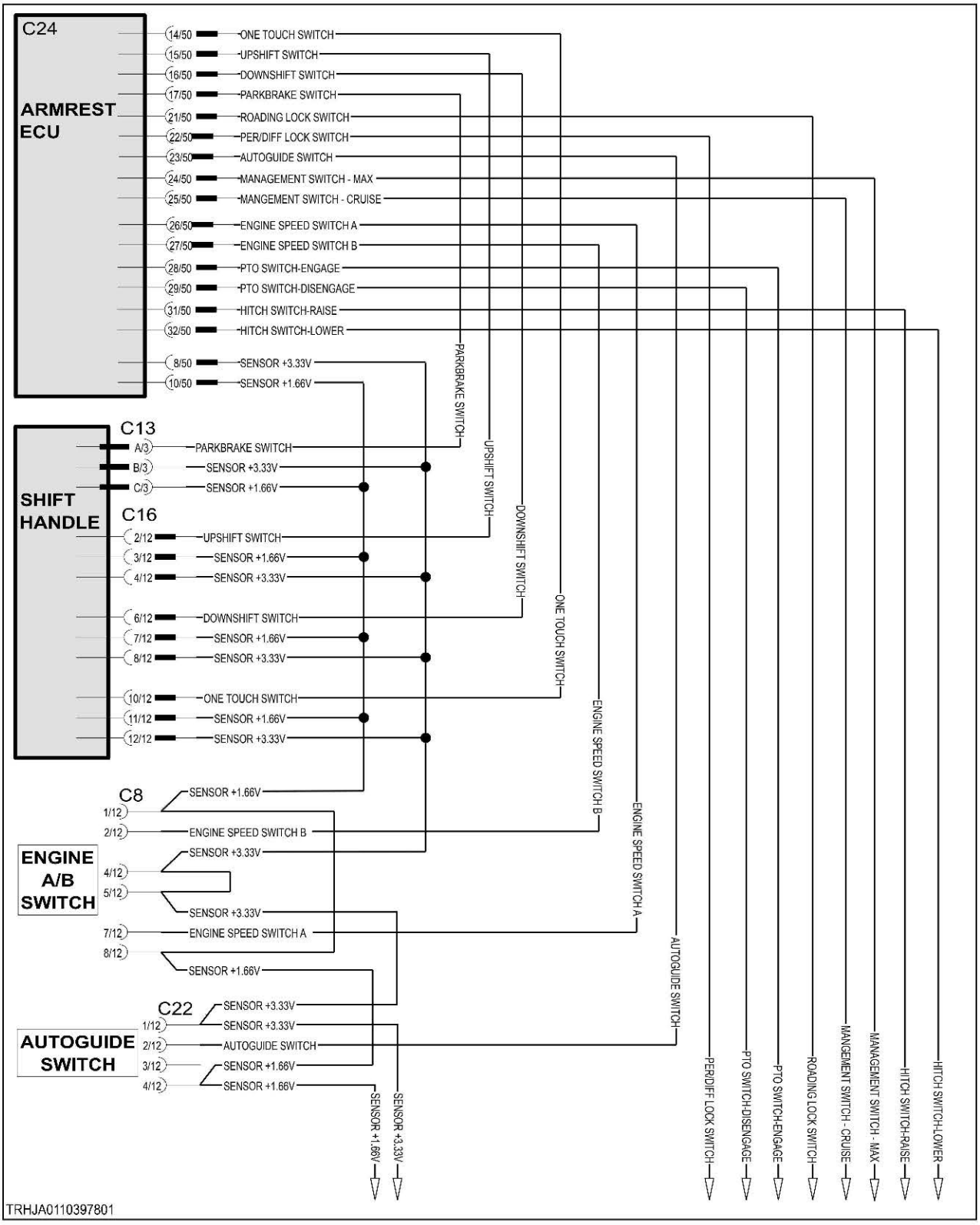

Fig. 447

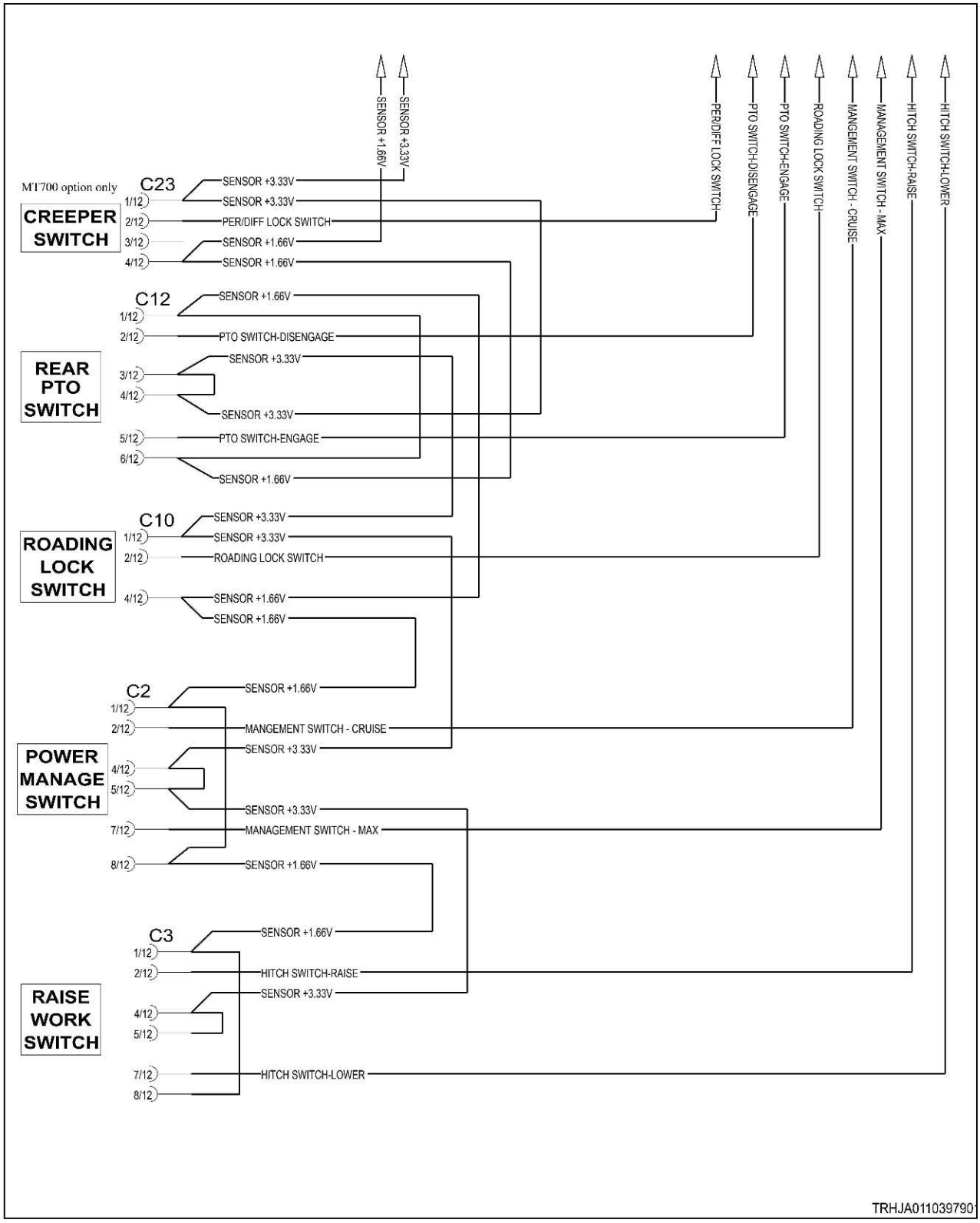
SENSOR +1.66V
SENSOR +3.33V
PER/DIFF LOCK SWITCH
PTO SWITCH-DISENGAGE
PTO SWITCH-ENGAGE
ROADING LOCK SWITCH
MANGEMENT SWITCH - CRUISE
MANAGEMENT SWITCH - MAX
HITCH SWITCH-RAISE
HITCH SWITCH-LOWER
MT700 option only
CREEPER SWITCH
C23
1/12 SENSOR +3.33V
SENSOR +3.33V
2/12 PER/DIFF LOCK SWITCH
3/12 SENSOR +1.66V
4/12 SENSOR +1.66V
C12
1/12 SENSOR +1.66V
2/12 PTO SWITCH-DISENGAGE
REAR PTO SWITCH
3/12 SENSOR +3.33V
4/12
SENSOR +3.33V
5/12 PTO SWITCH-ENGAGE
6/12
SENSOR +1.66V
C10
ROADING LOCK SWITCH
1/12 SENSOR +3.33V
SENSOR +3.33V
2/12 ROADING LOCK SWITCH
4/12 SENSOR +1.66V
SENSOR +1.66V
C2
1/12 SENSOR +1.66V
2/12 MANGEMENT SWITCH - CRUISE
POWER MANAGE SWITCH
SENSOR +3.33V
4/12
5/12
SENSOR +3.33V
7/12 MANAGEMENT SWITCH - MAX
8/12 SENSOR +1.66V
C3
SENSOR +1.66V
1/12
2/12 HITCH SWITCH-RAISE
SENSOR +3.33V
RAISE WORK SWITCH
4/12
5/12
7/12 HITCH SWITCH-LOWER
8/12
TRHJA011039790

Fig. 448

10.7.74.2 Transmission control lever



Fig. 449 Switch pinout

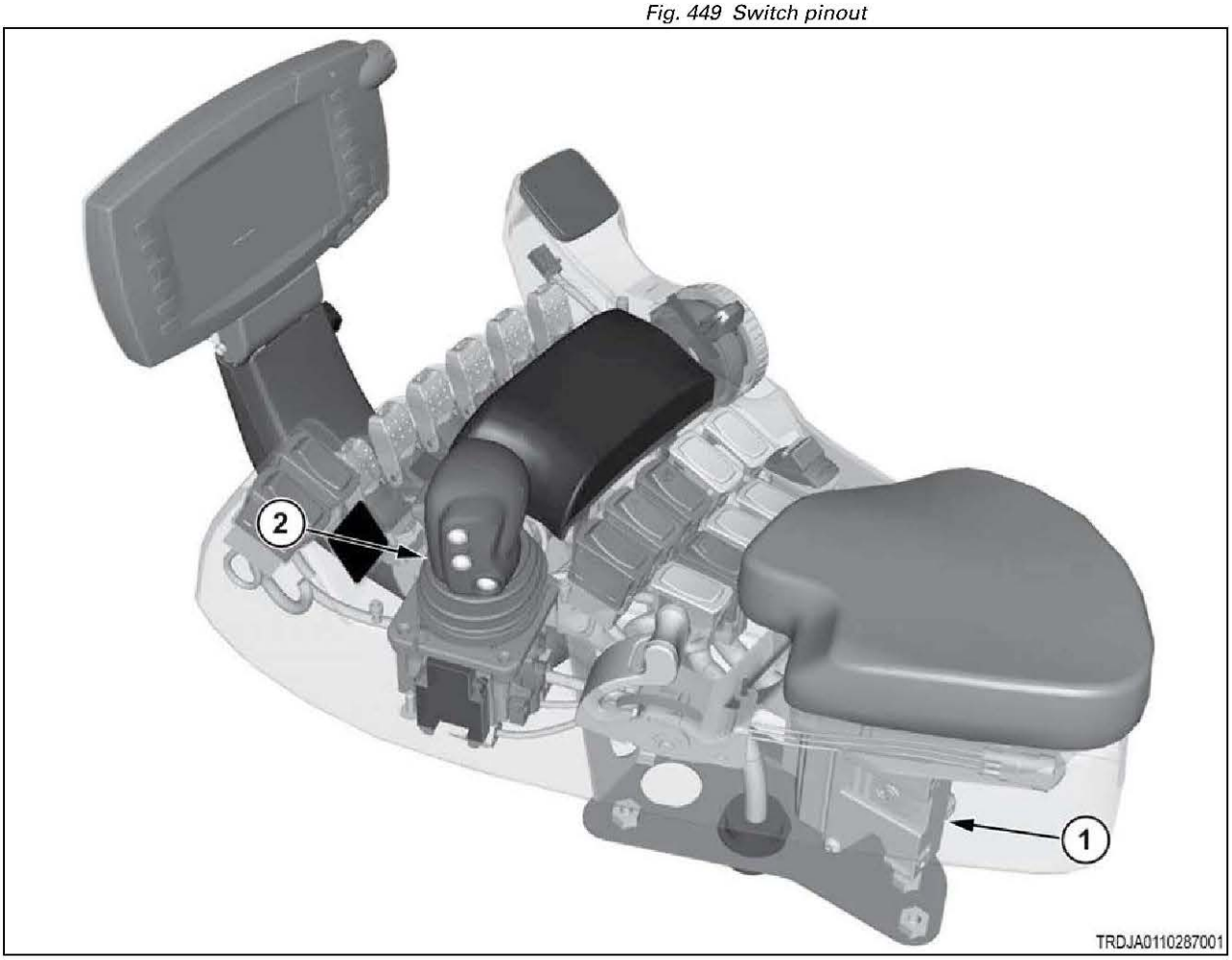

Fig. 450

(1)	Armrest module
(2)	Transmission control lever

10.7.75 Code SA 05 SPN 3646 FMI 03

The transmission control lever park brake switch signal voltage is above normal.

The signal voltage is higher than the 3.33-volt supply. The most likely cause is a short circuit to a higher voltage circuit.

The switch is a single-pole, double-throw (SPDT) type switch, except the "common" terminal is the data output instead of a power source. The 2 other contacts are connected to 3.33-volt power and 1.66-volt power. Operating the switch selects one of these voltages for the signal output. This error will likely be accompanied by a power supply error too. This information can be used to isolate the cause.

Diagnosis and solution

1. Determine when this error is reported.

a) Turn the key start switch to the on position.

b) Check for this error code (SA 05 SPN 69 FMI 03) as you operate the switch between on and off states.

Note that power supply errors will likely also be reported, as noted below.

Result

- The error is reported only when the switch is in the off position.

  Error code SA 05 SPN 3511 FMI 03 (3.33V power) is likely also reported.

  Diagnose the power supply error code first.

  Stop.
- The error is reported only when the switch is in the on position.

  Error code SA 05 SPN 3510 FMI 03 (1.66V power) is likely also reported.

  Diagnose the power supply error code first.

  Stop.
- The error is reported regardless of switch position.

  The signal wire is shorted to some voltage source.

  Repair or replace the harness.

  See step 2 to validate the repair.

2. Check if the fault code remains.

a) Inspect and clean the harness connector contacts.

b) Connect all the connectors.

c) Turn the battery disconnect switch to the on position.

d) Turn the key start switch to the on position.

e) Operate the machine at low idle.

f) Check if the fault code remains.

Result

- SPN 3646 FMI 03 is not active.

  Stop.
- SPN 3646 FMI 03 is active.

  Failure of the armrest module is possible but not common. Exit the procedure and do the procedure again. If the fault code remains active, replace the armrest module.

  Stop.

10.7.75.1 Transmission control lever electrical schematic

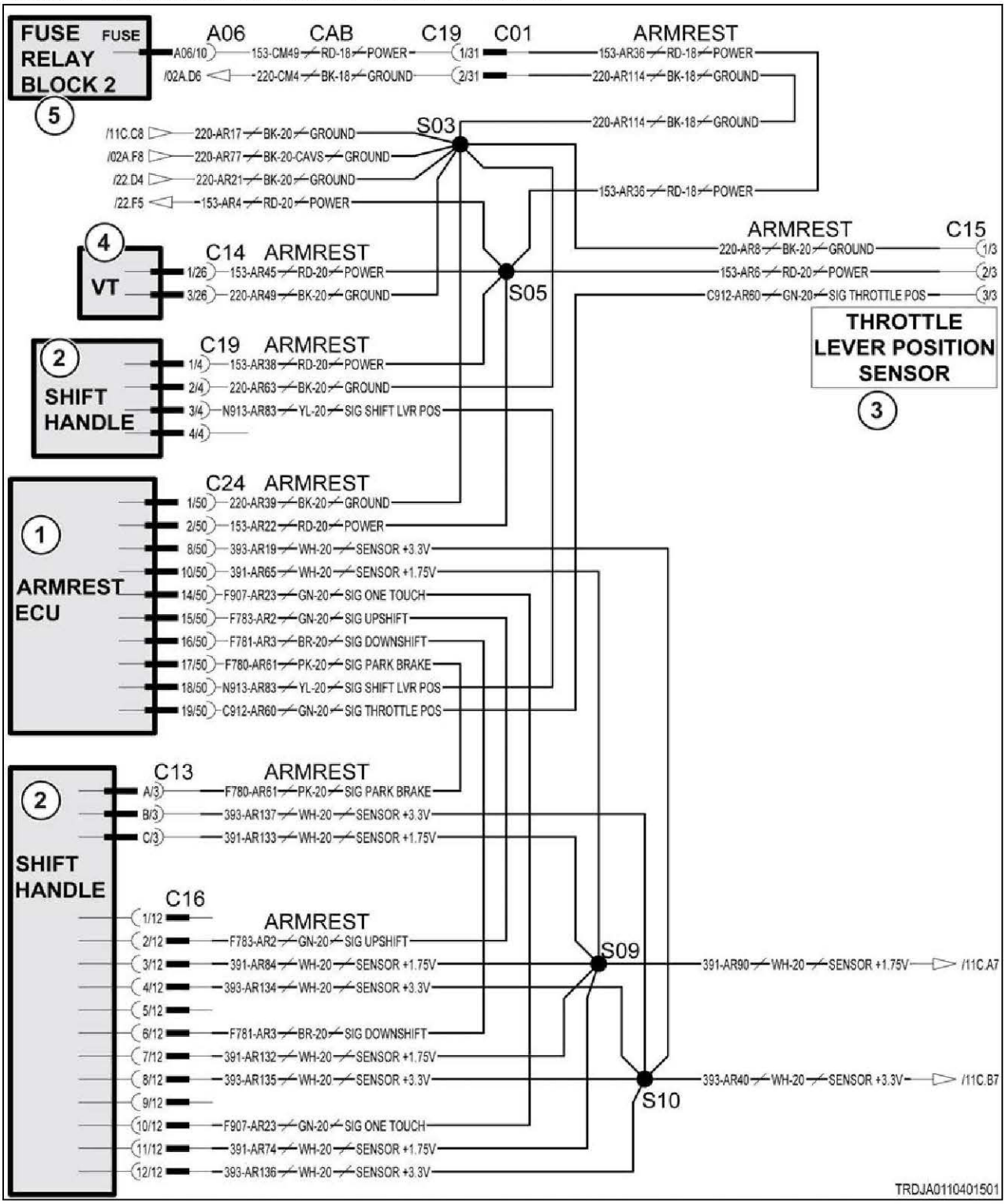

Fig. 451

Schematic legend		
Item	**Schematic term**	**Description**
1	ARMREST ECU	Armrest module
2	SHIFT HANDLE	Transmission control lever
3	THROTTLE LEVER POSITION SENSOR	Throttle lever position sensor
4	VT	Virtual terminal
5	FUSE RELAY BLOCK 2	Fuse relay block 2
--	SIG THROTTLE POS	Signal throttle position
--	SIG UPSHIFT	Signal upshift
--	SIG DOWNSHIFT	Signal downshift
--	SIG ONE TOUCH	Signal one touch
--	SIG PARK BRAKE	Signal park brake
--	SIG SHIFT LVR POSITION	Signal transmission control lever

1.7v and 3.3v schematics

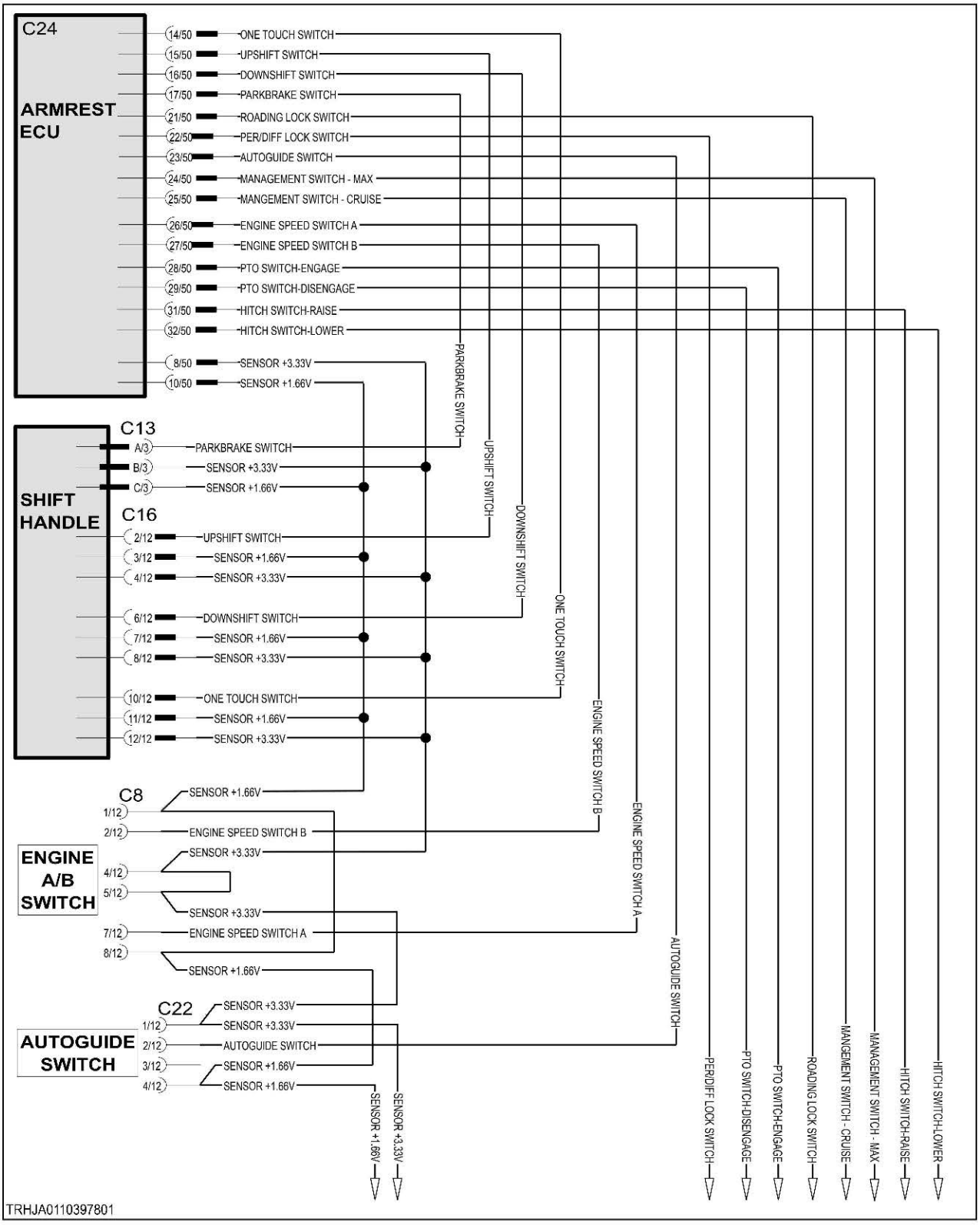

Fig. 452

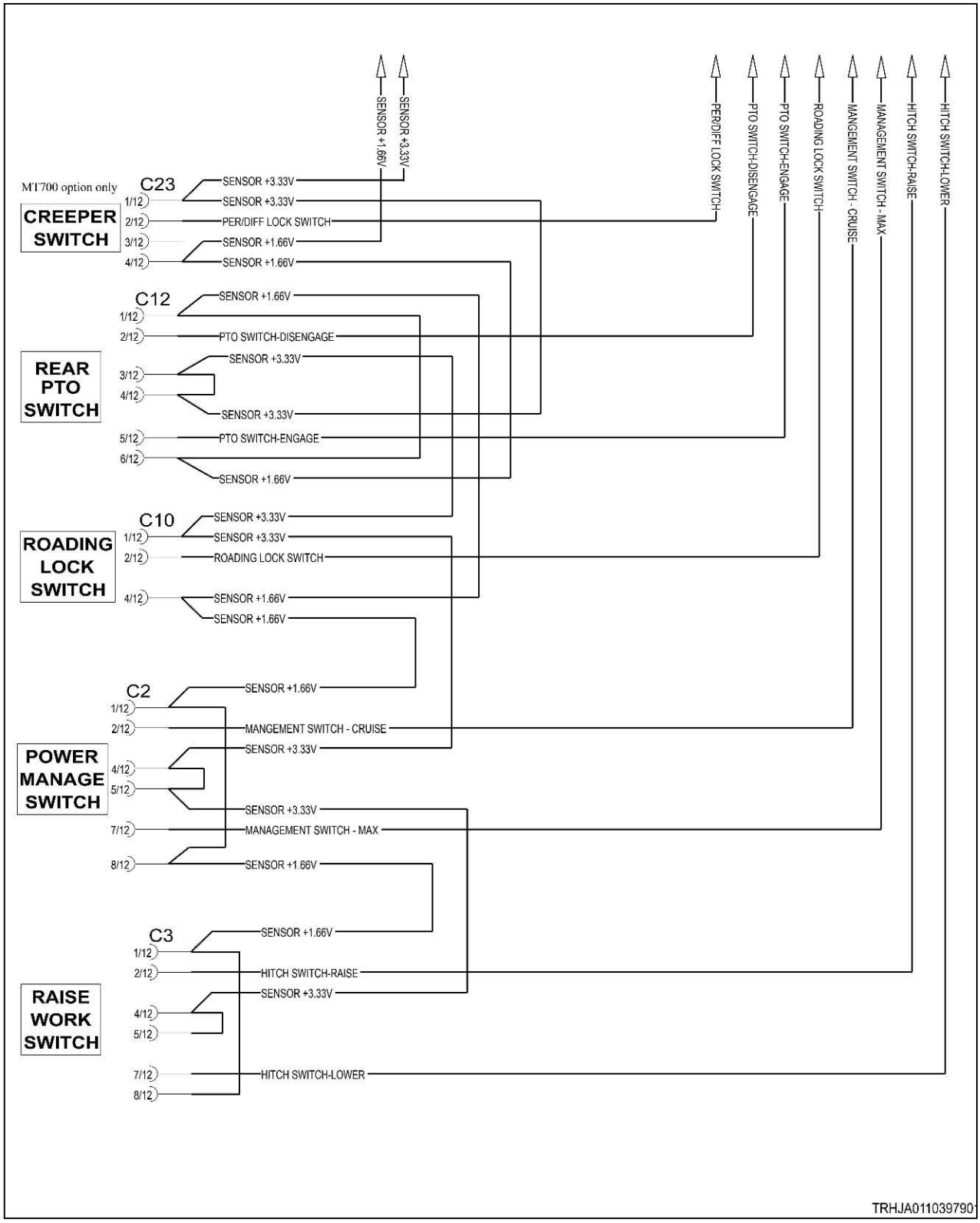
SENSOR +1.66V
SENSOR +3.33V
PER/DIFF LOCK SWITCH
PTO SWITCH-DISENGAGE
PTO SWITCH-ENGAGE
ROADING LOCK SWITCH
MANGEMENT SWITCH - CRUISE
MANAGEMENT SWITCH - MAX
HITCH SWITCH-RAISE
HITCH SWITCH-LOWER
MT700 option only
CREEPER SWITCH
C23
1/12
2/12
3/12
4/12
SENSOR +3.33V
SENSOR +3.33V
PER/DIFF LOCK SWITCH
SENSOR +1.66V
SENSOR +1.66V
REAR PTO SWITCH
C12
1/12
2/12
3/12
4/12
5/12
6/12
SENSOR +1.66V
PTO SWITCH-DISENGAGE
SENSOR +3.33V
SENSOR +3.33V
PTO SWITCH-ENGAGE
SENSOR +1.66V
ROADING LOCK SWITCH
C10
1/12
2/12
4/12
SENSOR +3.33V
SENSOR +3.33V
ROADING LOCK SWITCH
SENSOR +1.66V
SENSOR +1.66V
POWER MANAGE SWITCH
C2
1/12
2/12
4/12
5/12
7/12
8/12
SENSOR +1.66V
MANGEMENT SWITCH - CRUISE
SENSOR +3.33V
SENSOR +3.33V
MANAGEMENT SWITCH - MAX
SENSOR +1.66V
RAISE WORK SWITCH
C3
1/12
2/12
4/12
5/12
7/12
8/12
SENSOR +1.66V
HITCH SWITCH-RAISE
SENSOR +3.33V
HITCH SWITCH-LOWER
TRHJA011039790

Fig. 453

10.7.75.2 Transmission control lever



Fig. 454 Switch pinout

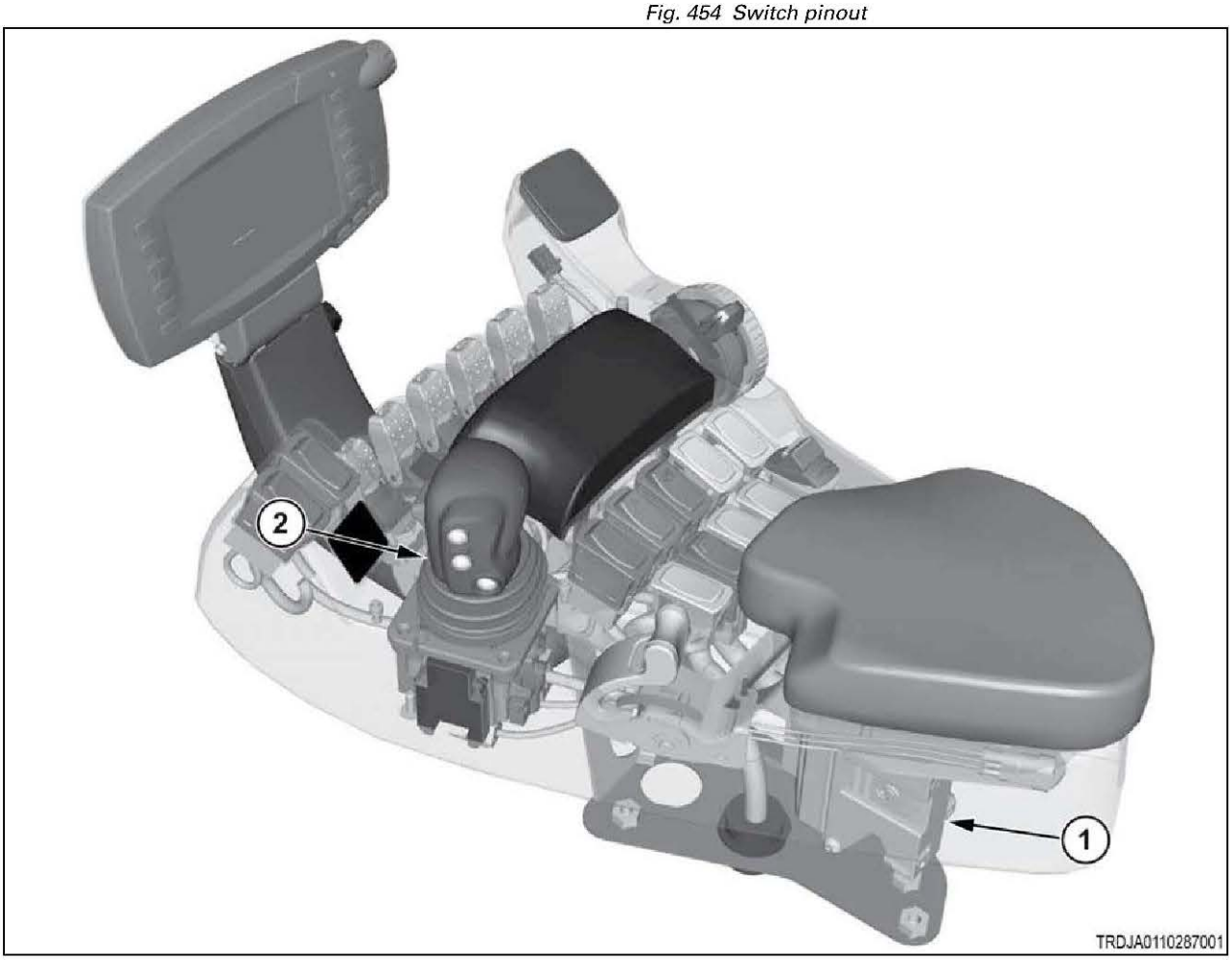

Fig. 455

(1)	Armrest module
(2)	Transmission control lever

10.7.76 Code SA 05 SPN 3646 FMI 04

The transmission control lever signal voltage is below normal.

The signal voltage is lower than the 1.66-volt supply. The most likely cause is a short circuit to ground.

The switch is a single-pole, double-throw (SPDT) type switch, except the "common" terminal is the data output instead of a power source. The 2 other contacts are connected to 3.33-volt power and 1.66-volt power. Operating the switch selects one of these voltages for the signal output. This error will likely be accompanied by a power supply error too. This information can be used to isolate the cause.

Diagnosis and solution

1. Determine when this error is reported.

a) Turn the key start switch to the on position.

b) Check for this error code (SA 05 SPN 3646 FMI 04) as you operate the switch between the off position and on position.

Note that power supply errors will likely also be reported, as noted below.

Result

- The error is reported only when the switch is in the off position.

  Error code SA 05 SPN 3511 FMI 04 (3.33V power) is likely also reported.

  Diagnose the power supply error code first.

  Stop.
- The error is reported only when the switch is in the on position.

  Error code SA 05 SPN 3510 FMI 04 (1.66V power) is likely also reported.

  Diagnose the power supply error code first.

  Stop.
- The error is reported regardless of switch position.

  The signal wire is shorted to ground.

  Repair or replace the harness.

  See step 2 to validate the repair.

2. Check if the fault code remains.

a) Inspect and clean the harness connector contacts.

b) Connect all the connectors.

c) Turn the battery disconnect switch to the on position.

d) Turn the key start switch to the on position.

e) Operate the machine at low idle.

f) Check if the fault code remains.

Result

- SPN 3646 FMI 04 is not active.

  Stop.
- SPN 3646 FMI 04 is active.

  Failure of the armrest module is possible but not common. Exit the procedure and do the procedure again. If the fault code remains active, replace the armrest module.

  Stop.

10.7.76.1 Transmission control lever electrical schematic

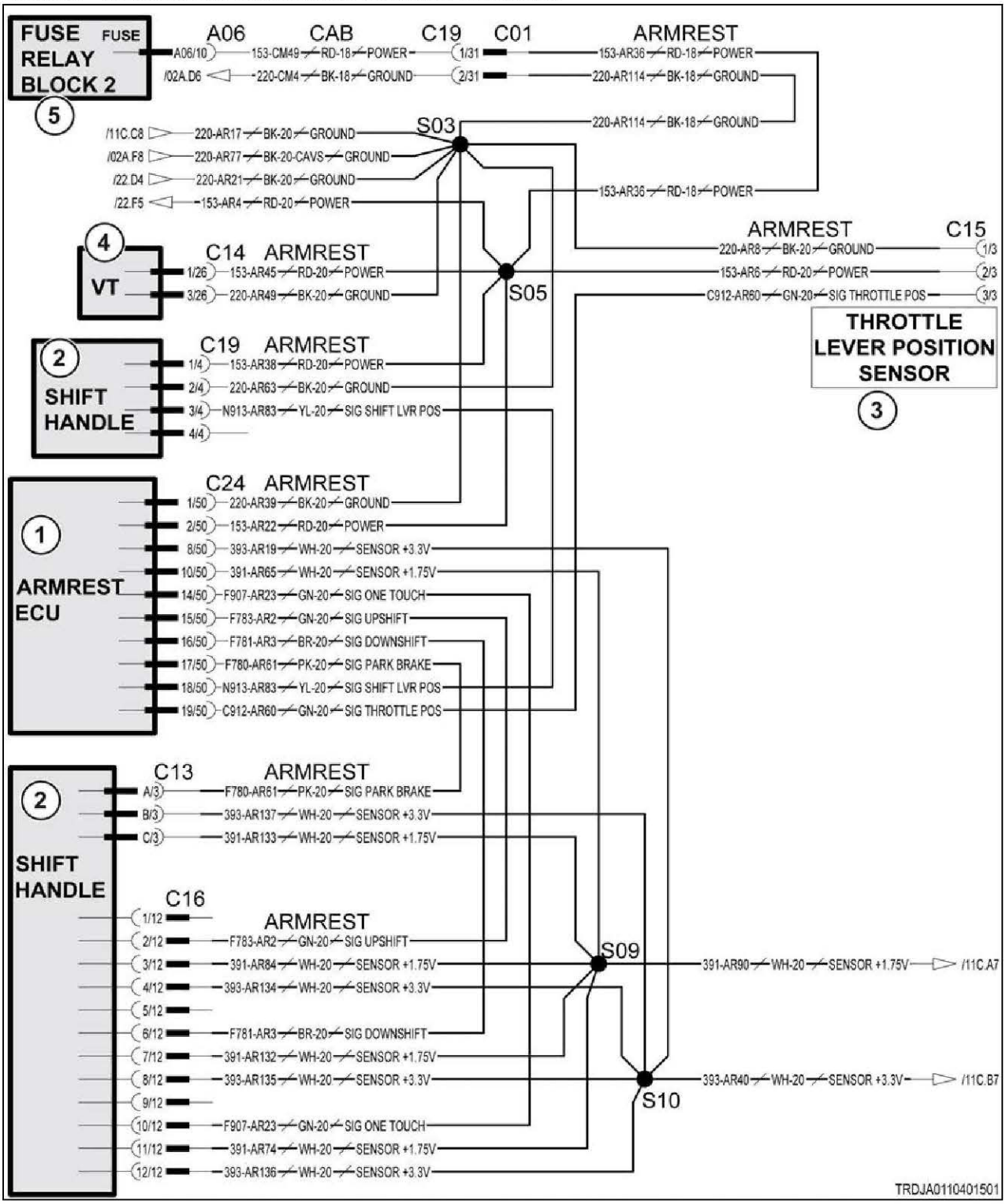

Fig. 456

Schematic legend		
Item	**Schematic term**	**Description**
1	ARMREST ECU	Armrest module
2	SHIFT HANDLE	Transmission control lever
3	THROTTLE LEVER POSITION SENSOR	Throttle lever position sensor
4	VT	Virtual terminal
5	FUSE RELAY BLOCK 2	Fuse relay block 2
--	SIG THROTTLE POS	Signal throttle position
--	SIG UPSHIFT	Signal upshift
--	SIG DOWNSHIFT	Signal downshift
--	SIG ONE TOUCH	Signal one touch
--	SIG PARK BRAKE	Signal park brake
--	SIG SHIFT LVR POSITION	Signal transmission control lever

1.7v and 3.3v schematics

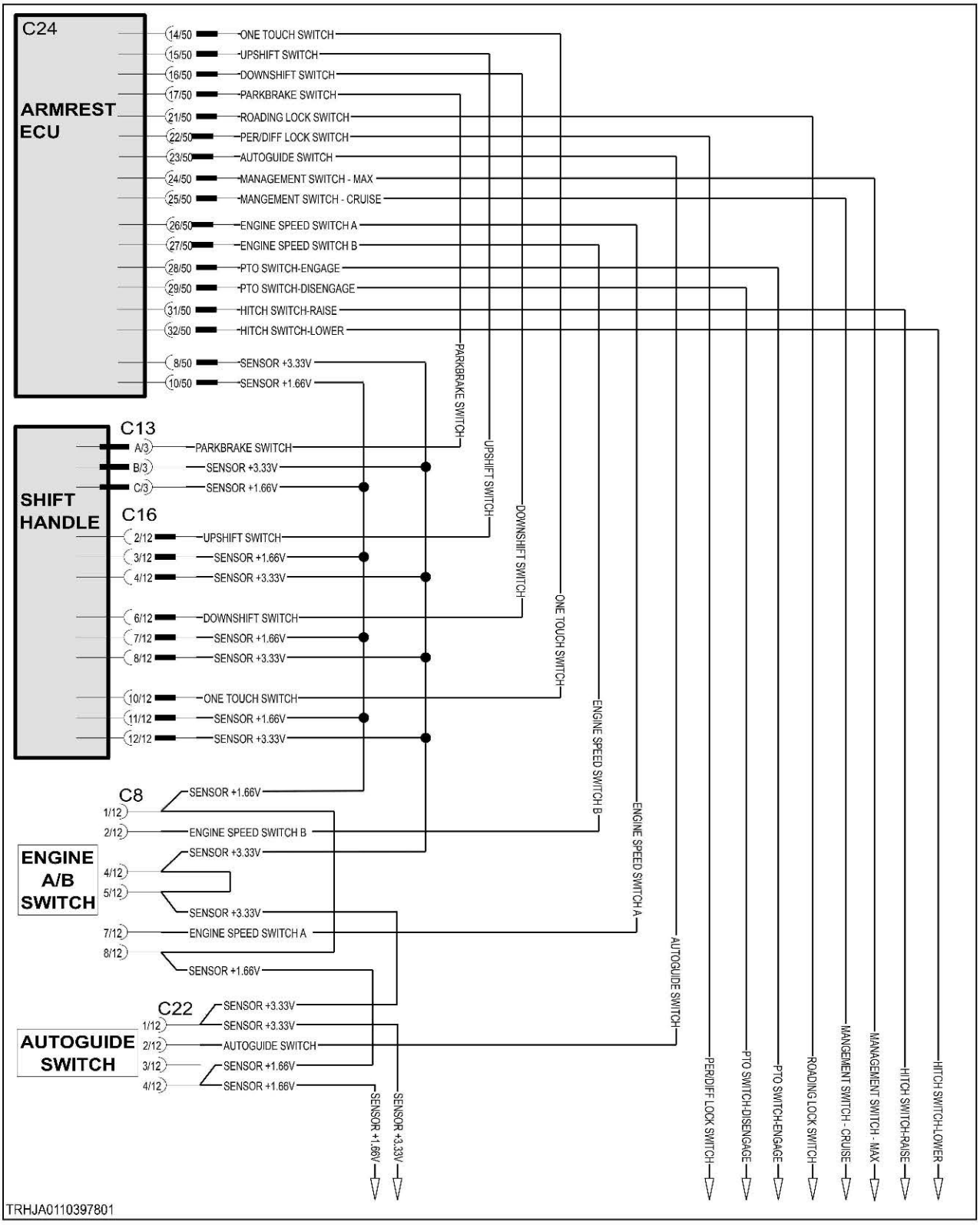

Fig. 457

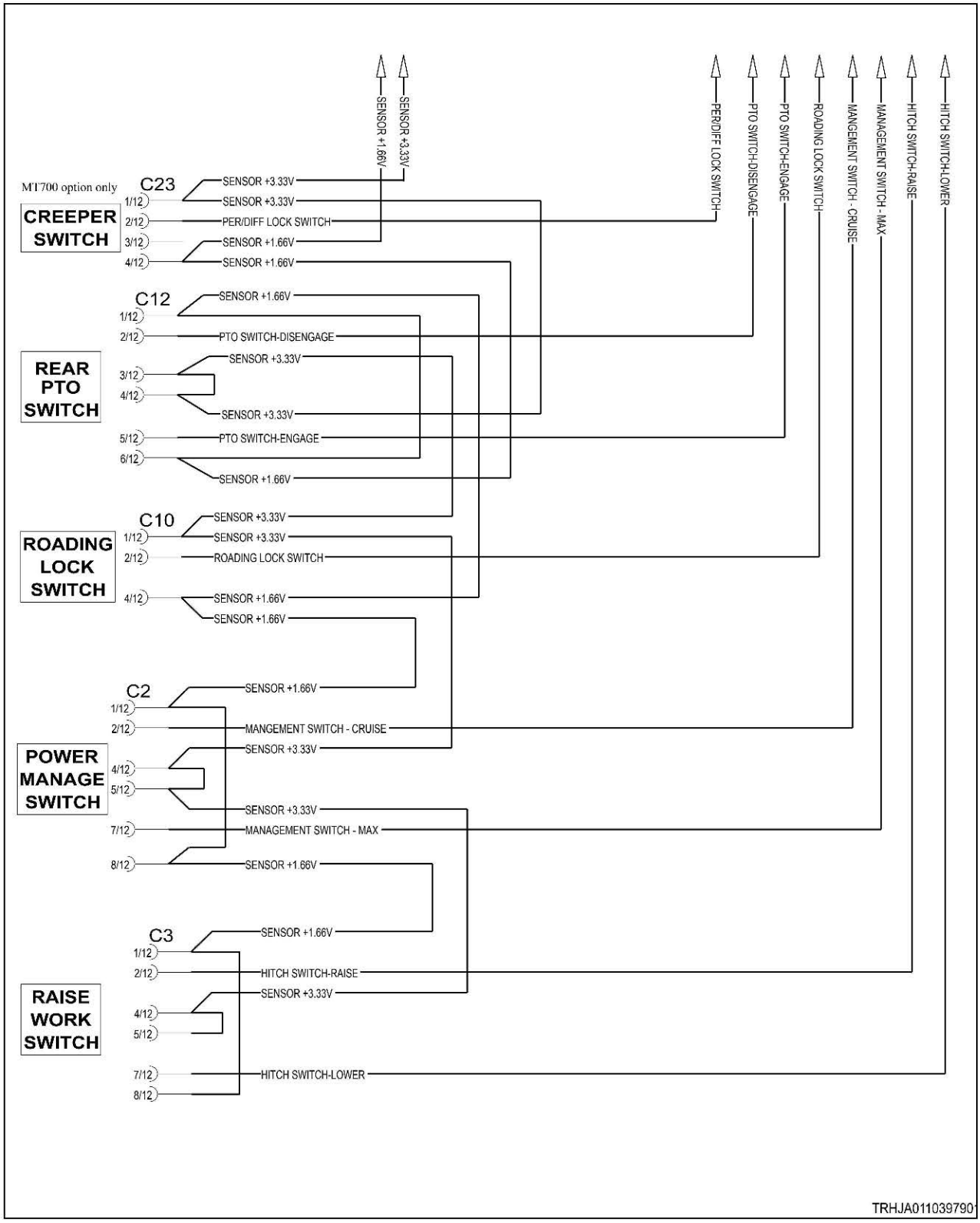
SENSOR +1.66V
SENSOR +3.33V
PER/DIFF LOCK SWITCH
PTO SWITCH-DISENGAGE
PTO SWITCH-ENGAGE
ROADING LOCK SWITCH
MANGEMENT SWITCH - CRUISE
MANAGEMENT SWITCH - MAX
HITCH SWITCH-RAISE
HITCH SWITCH-LOWER
MT700 option only
CREEPER SWITCH
C23
1/12 SENSOR +3.33V
SENSOR +3.33V
2/12 PER/DIFF LOCK SWITCH
3/12 SENSOR +1.66V
4/12 SENSOR +1.66V
C12
1/12 SENSOR +1.66V
2/12 PTO SWITCH-DISENGAGE
REAR PTO SWITCH
3/12 SENSOR +3.33V
4/12
SENSOR +3.33V
5/12 PTO SWITCH-ENGAGE
6/12
SENSOR +1.66V
C10
ROADING LOCK SWITCH
1/12 SENSOR +3.33V
SENSOR +3.33V
2/12 ROADING LOCK SWITCH
4/12 SENSOR +1.66V
SENSOR +1.66V
C2
1/12 SENSOR +1.66V
2/12 MANGEMENT SWITCH - CRUISE
POWER MANAGE SWITCH
SENSOR +3.33V
4/12
5/12
SENSOR +3.33V
7/12 MANAGEMENT SWITCH - MAX
8/12 SENSOR +1.66V
C3
SENSOR +1.66V
1/12
2/12 HITCH SWITCH-RAISE
SENSOR +3.33V
RAISE WORK SWITCH
4/12
5/12
7/12 HITCH SWITCH-LOWER
8/12
TRHJA011039790

Fig. 458

10.7.76.2 Transmission control lever



Fig. 459 Switch pinout

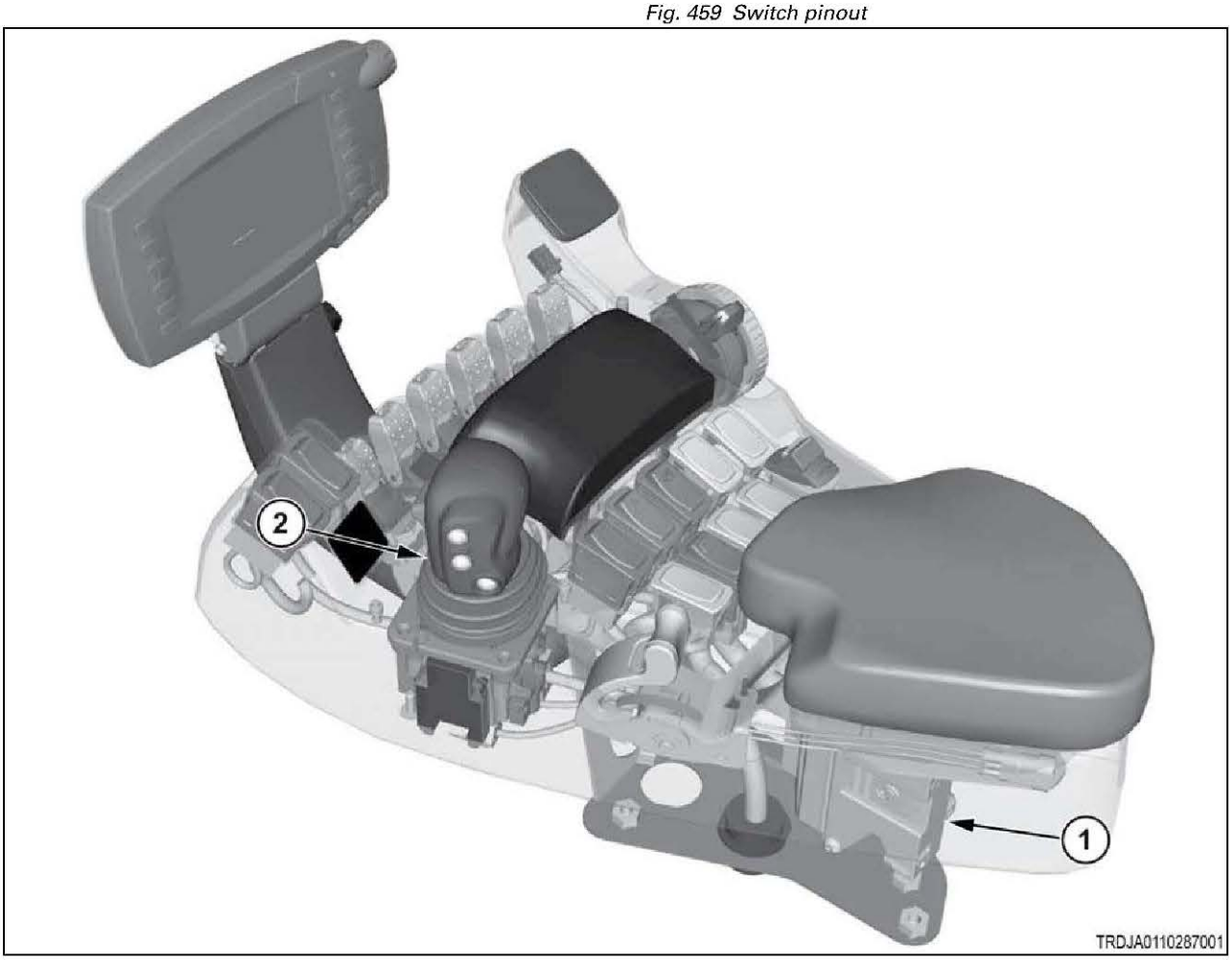

Fig. 460

(1)	Armrest module
(2)	Transmission control lever

10.7.77 Code SA 05 SPN 3646 FMI 05

Open circuit in the transmission control lever, park brake switch circuit.

The switch is a single-pole, double-throw (SPDT) type switch, except the "common" terminal is the data output instead of a power source. The 2 other contacts are connected to 3.33-volt power and 1.66-volt power. Operating the switch selects one of these voltages for the signal output. These 2 power circuits are shared by several other function switches on the armrest. This knowledge can aid in diagnosing the fault.

Diagnosis and solution

1. Determine when this error is reported.

a) Turn the key start switch to the on position.

b) Check whether the error code is reported as you operate the switch between on and off states.

Result

- The error is reported only when the switch is in the off position.

  The open circuit is in the 3.33V power circuit.

  See step 2 to isolate the location.
- The error is reported only when the switch is in the on position.

  The open circuit is in the 1.66V power circuit.

  See step 2 to isolate the location.
- The error is reported regardless of switch position.

  The open circuit is in the signal circuit.

  Repair or replace the armrest harness.

  See step 3 to validate the repair.

2. Isolate the power circuit open circuit.

a) Operate all other shift lever switches, and at least one downstream armrest switches, according to the list below, from their off to on positions.

Electrical sequence of switches, starting from the armrest module.

1. Shift Handle (3 pushbuttons)
2. Engine A/B switch
3. Autoguide switch
4. Creeper switch
5. Rear PTO
6. Roading Lock switch
7. Power management (cruise/full) switch
8. Hitch Raise/Work switch

b) Observe which other switches (if any) exhibit similar open circuit error codes.

Result

- At least one upstream switch reported a similar error.

  The open circuit lies at, or just upstream from, that switch.

  Repair or replace the armrest harness.

  See step 3 to validate the repair.

- Only downstream switches reported similar errors.

  The harness is open circuited at this switch location.

  Repair or replace the harness.

  See step 3 to validate the repair.
- No other switches reported similar errors.

  The switch is at fault.

  Replace the switch.

  See step 3 to validate the repair.

3. Check if the fault code remains.

a) Inspect and clean the harness connector contacts.
b) Connect all the connectors.
c) Turn the battery disconnect switch to the on position.
d) Turn the key start switch to the on position.
e) Operate the machine at low idle.
f) Check if the fault code remains.

Result

- SPN 3646 FMI 05 is not active.

  Stop.
- SPN 3646 FMI 05 is active.

  Failure of the armrest module is possible but not common. Exit the procedure and do the procedure again. If the fault code remains active, replace the armrest module.

  Stop.

10.7.77.1 Transmission control lever electrical schematic

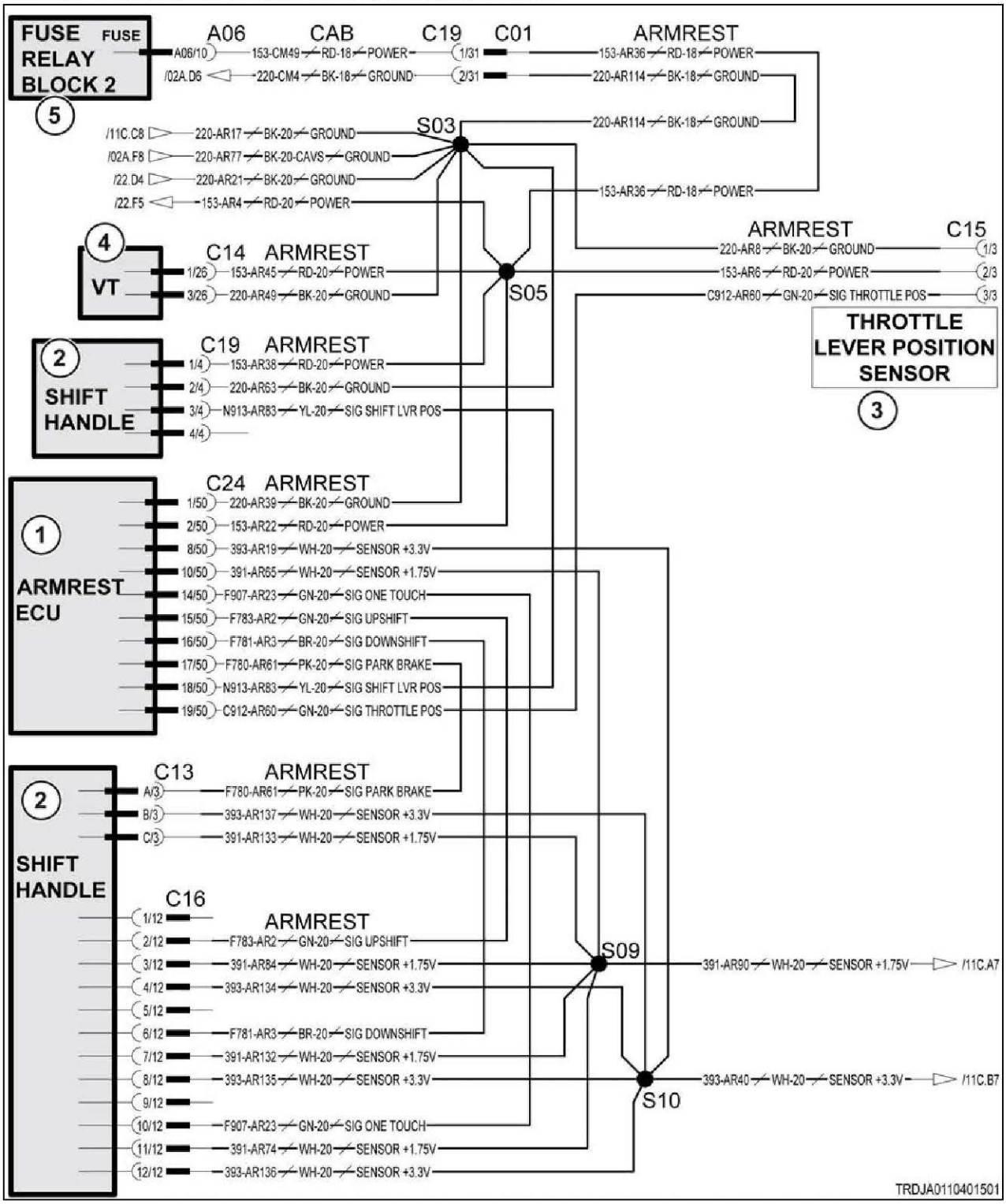

Fig. 461

Schematic legend		
Item	**Schematic term**	**Description**
1	ARMREST ECU	Armrest module
2	SHIFT HANDLE	Transmission control lever
3	THROTTLE LEVER POSITION SENSOR	Throttle lever position sensor
4	VT	Virtual terminal
5	FUSE RELAY BLOCK 2	Fuse relay block 2
--	SIG THROTTLE POS	Signal throttle position
--	SIG UPSHIFT	Signal upshift
--	SIG DOWNSHIFT	Signal downshift
--	SIG ONE TOUCH	Signal one touch
--	SIG PARK BRAKE	Signal park brake
--	SIG SHIFT LVR POSITION	Signal transmission control lever

1.7v and 3.3v schematics

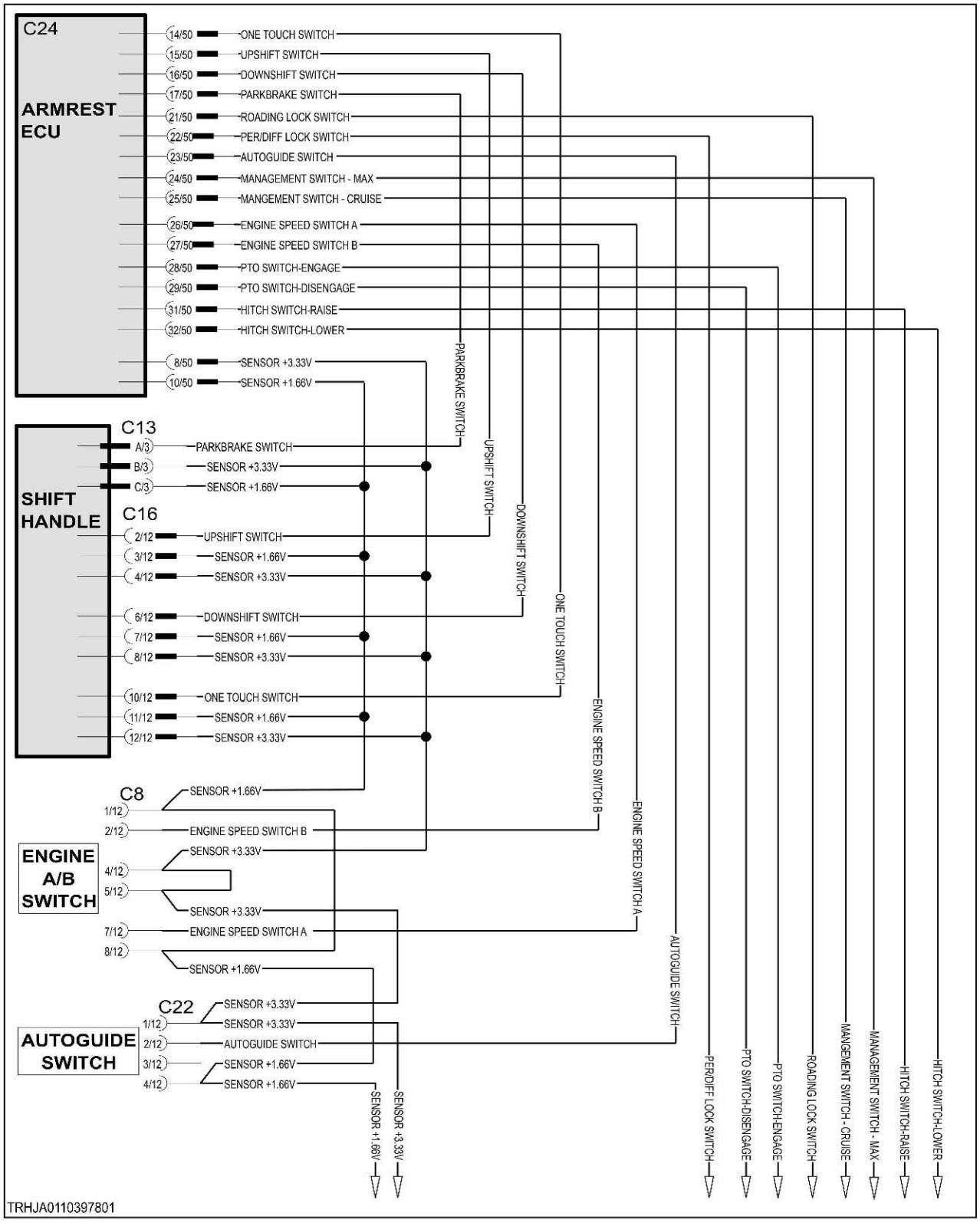

Fig. 462

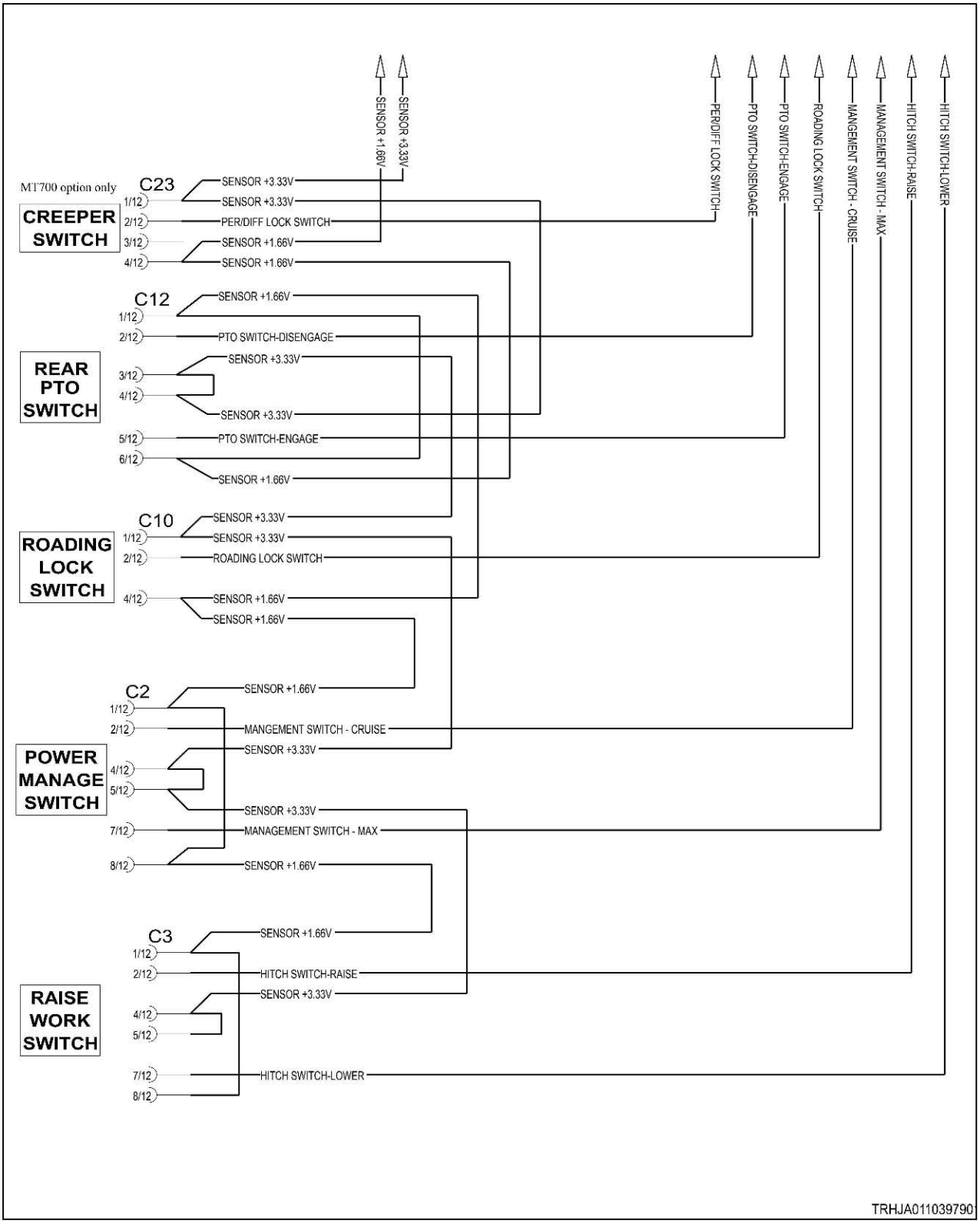
SENSOR +1.66V
SENSOR +3.33V
PER/DIFF LOCK SWITCH
PTO SWITCH-DISENGAGE
PTO SWITCH-ENGAGE
ROADING LOCK SWITCH
MANGEMENT SWITCH - CRUISE
MANAGEMENT SWITCH - MAX
HITCH SWITCH-RAISE
HITCH SWITCH-LOWER
MT700 option only
CREEPER SWITCH
C23
1/12 SENSOR +3.33V
2/12 SENSOR +3.33V
3/12 PER/DIFF LOCK SWITCH
4/12 SENSOR +1.66V
SENSOR +1.66V
REAR PTO SWITCH
C12
1/12 SENSOR +1.66V
2/12 PTO SWITCH-DISENGAGE
3/12 SENSOR +3.33V
4/12
SENSOR +3.33V
5/12 PTO SWITCH-ENGAGE
6/12
SENSOR +1.66V
ROADING LOCK SWITCH
C10
1/12 SENSOR +3.33V
SENSOR +3.33V
2/12 ROADING LOCK SWITCH
4/12 SENSOR +1.66V
SENSOR +1.66V
POWER MANAGE SWITCH
C2
1/12 SENSOR +1.66V
2/12 MANGEMENT SWITCH - CRUISE
SENSOR +3.33V
4/12
5/12
SENSOR +3.33V
7/12 MANAGEMENT SWITCH - MAX
8/12 SENSOR +1.66V
RAISE WORK SWITCH
C3
1/12 SENSOR +1.66V
2/12 HITCH SWITCH-RAISE
SENSOR +3.33V
4/12
5/12
7/12 HITCH SWITCH-LOWER
8/12
TRHJA011039790

Fig. 463

10.7.77.2 Transmission control lever



Fig. 464 Switch pinout

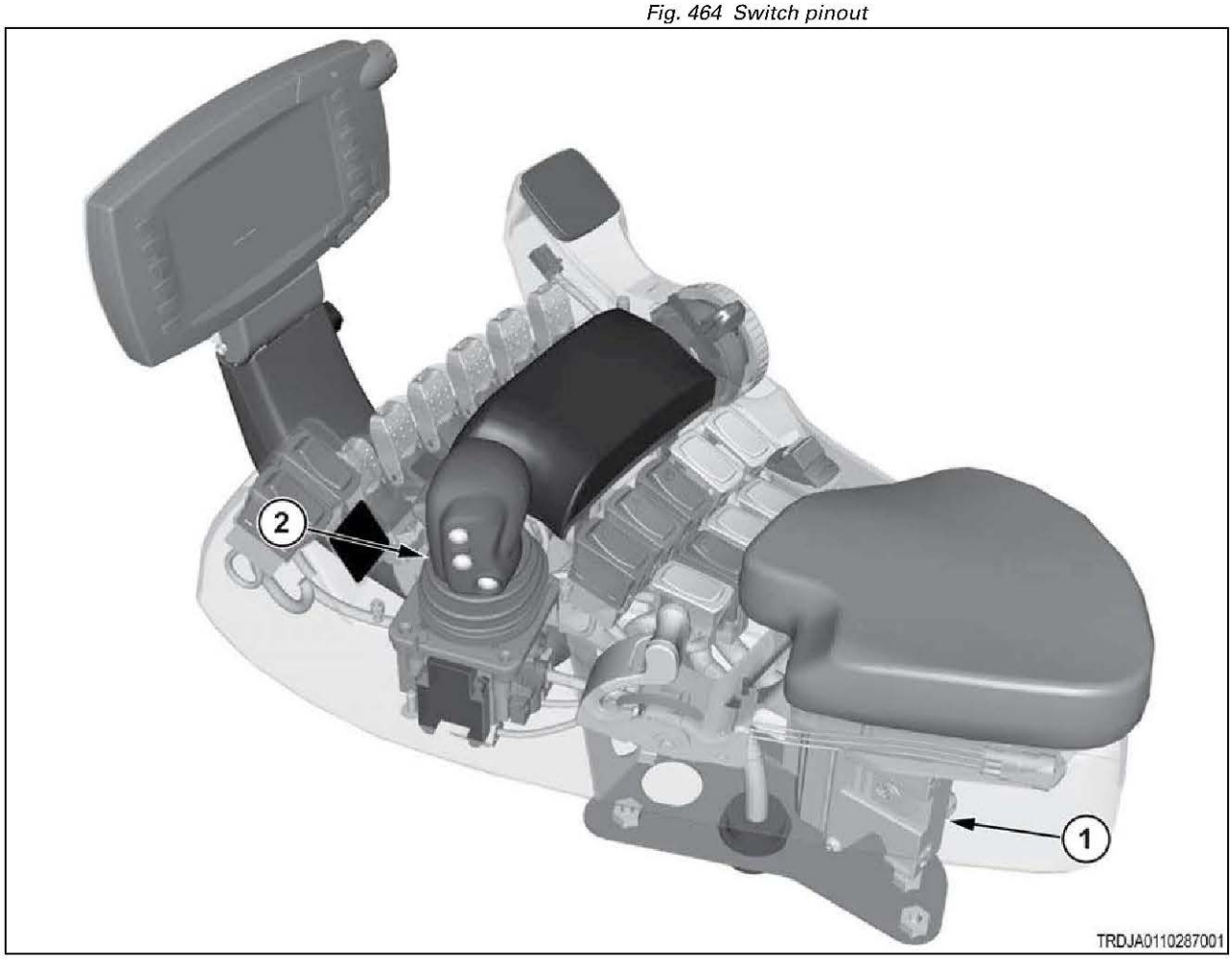

Fig. 465

(1)	Armrest module
(2)	Transmission control lever

10.7.78 Code SA 05 SPN 3652 FMI 02

The upshift switch signal is erratic, intermittent, or incorrect.

The switch is a single-pole, double-throw (SPDT) type switch, except the "common" terminal is the data output instead of a power source. The 2 other contacts are connected to 3.33-volt power and 1.66-volt power. Operating the switch selects one of these voltages for the signal output. These 2 power circuits are shared by several other function switches on the armrest. This knowledge can aid in diagnosing the fault.

Diagnosis and solution

1. Check the function of downstream switches that share power circuits.

This will help isolate whether the problem is in the power or signal circuit.

a) Turn the key start switch to the on position.
b) Operate the engine A/B speed switch in both directions.
c) Check for additional error codes.

Result

- SA 05 SPN 2970 FMI 02 or SA 05 SPN 2971 FMI 02 (engine speed) errors are reported.

  Focus further examination on the power circuits between the transmission control lever and the armrest controller.

  See step 2 to check for loose connections.
- No additional error codes are reported.

  The power circuits are not suspect.

  Focus further examination on the switch signal output.

  See step 2 to check for loose connections.

2. Inspect all harness and switch connections.

a) Turn the key start switch to the off position.
b) Turn the battery disconnect switch to the off position.
c) Open the top of the armrest console.
d) Inspect and clean all connectors and connector contacts:

- Look for bent or worn pins.
- Look for deformed or oversized sockets.
- Look for corrosion on the pins and sockets. Corrosion is a sign of a loose connection.
- Look for signs of overheating. Overheating is a sign of a poor connection, and can further loosen the pin or socket mount. The whole connector body should be replaced.

e) Make sure to inspect the circuits identified in step 1 as they pass through the following connector locations:

- Switch signal at the armrest ECU C24-15.
- All contacts at the upshift switch.
- The 1.66V and 3.33V power signals at the Armrest ECU C24-8 (3.33V) and C24-10 (1.66V)

f) Repair or replace any connector or harness found faulty.

Result

- No faulty contacts were found.

  See step 3 to check the switch function.
- Faulty contacts were found and repaired.

  See step 4 to validate the repair.

3. Check the switch function.

a) Disconnect the upshift switch.

b) Check resistance between contacts 2 & 3 and 2 & 4, as you operate the switch from on and off.

- In the on-position, contacts 2 and 3 should have continuity.
- In the off-position, contacts 2 and 4 should have continuity.

Result

- Continuity checks are correct.

  See step 4 to check if the error persists.
- Continuity checks are incorrect.

  Replace the switch.

  See step 4 to validate the repair.

4. Check if the fault code remains.

a) Inspect and clean the harness connector contacts.
b) Connect all the connectors.
c) Turn the battery disconnect switch to the on position.
d) Turn the key start switch to the on position.
e) Operate the machine at low idle.
f) Check if the fault code remains.

Result

- SPN 3652 FMI 02 is not active.

  Stop.
- SPN 3652 FMI 02 is active.

  Failure of the armrest module is possible but not common. Exit the procedure and do the procedure again. If the fault code remains active, replace the armrest module.

  Stop.

10.7.78.1 Transmission control lever electrical schematic

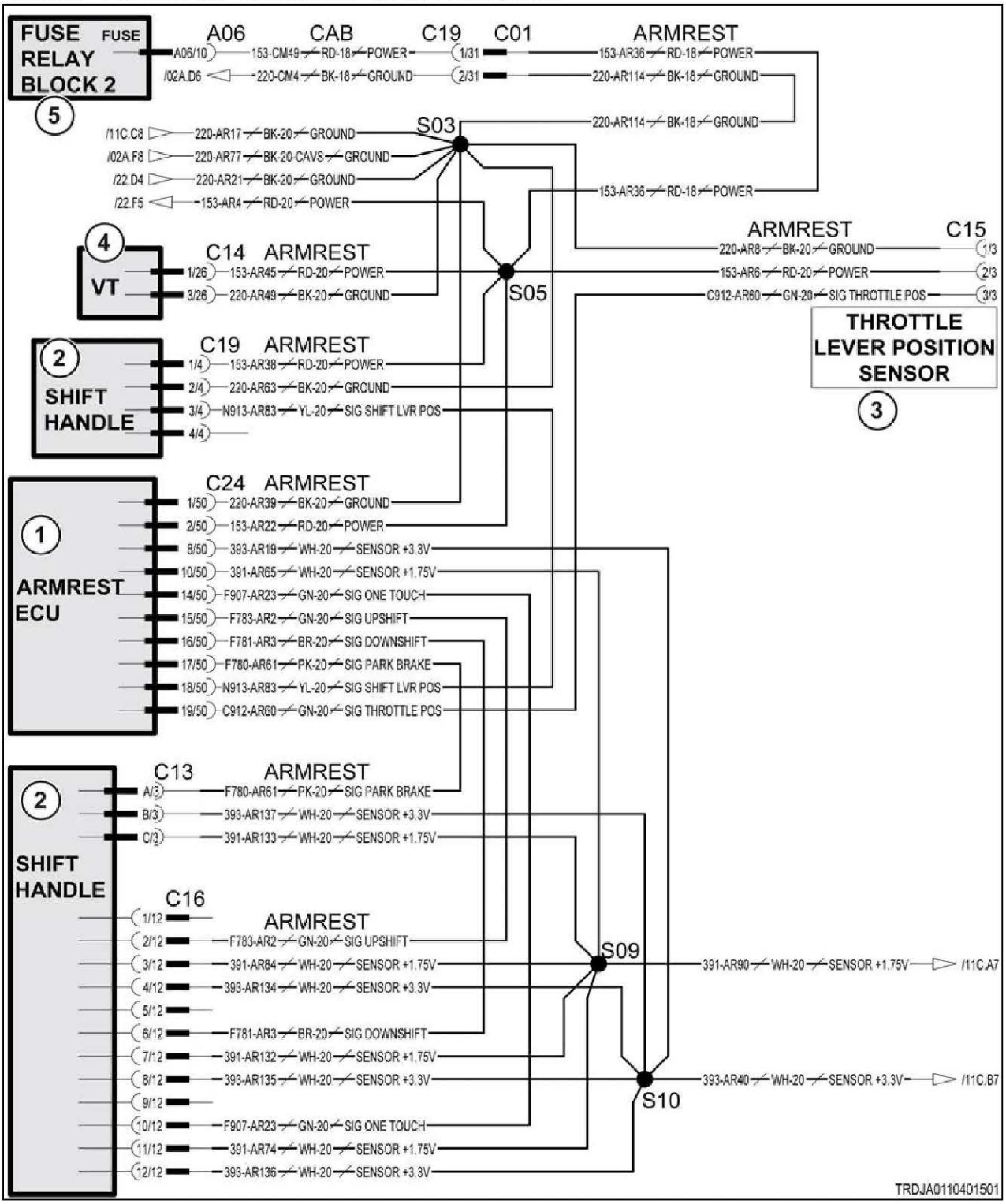

Fig. 466

Schematic legend		
Item	**Schematic term**	**Description**
1	ARMREST ECU	Armrest module
2	SHIFT HANDLE	Transmission control lever
3	THROTTLE LEVER POSITION SENSOR	Throttle lever position sensor
4	VT	Virtual terminal
5	FUSE RELAY BLOCK 2	Fuse relay block 2
--	SIG THROTTLE POS	Signal throttle position
--	SIG UPSHIFT	Signal upshift
--	SIG DOWNSHIFT	Signal downshift
--	SIG ONE TOUCH	Signal one touch
--	SIG PARK BRAKE	Signal park brake
--	SIG SHIFT LVR POSITION	Signal transmission control lever

1.7v and 3.3v schematics

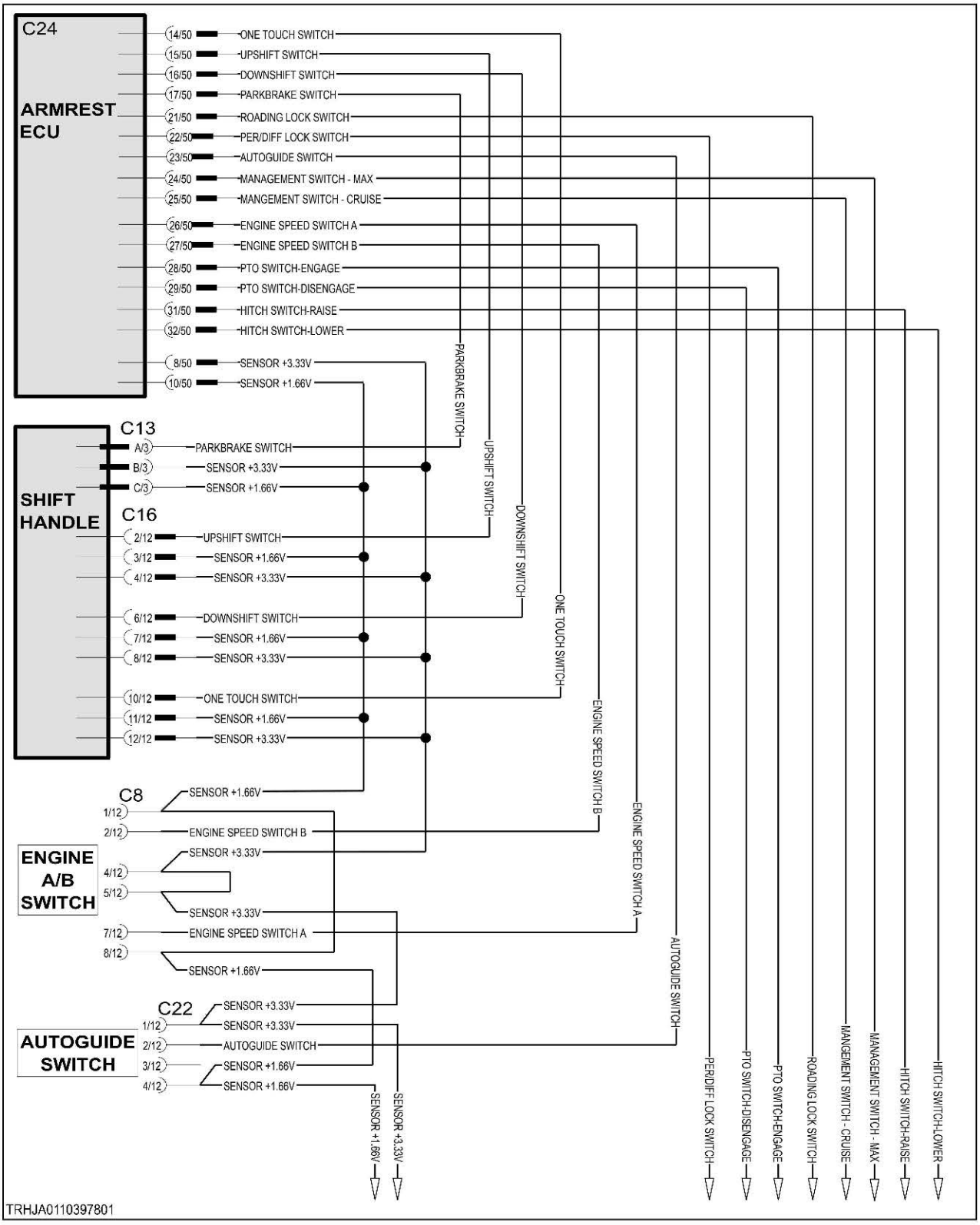

Fig. 467

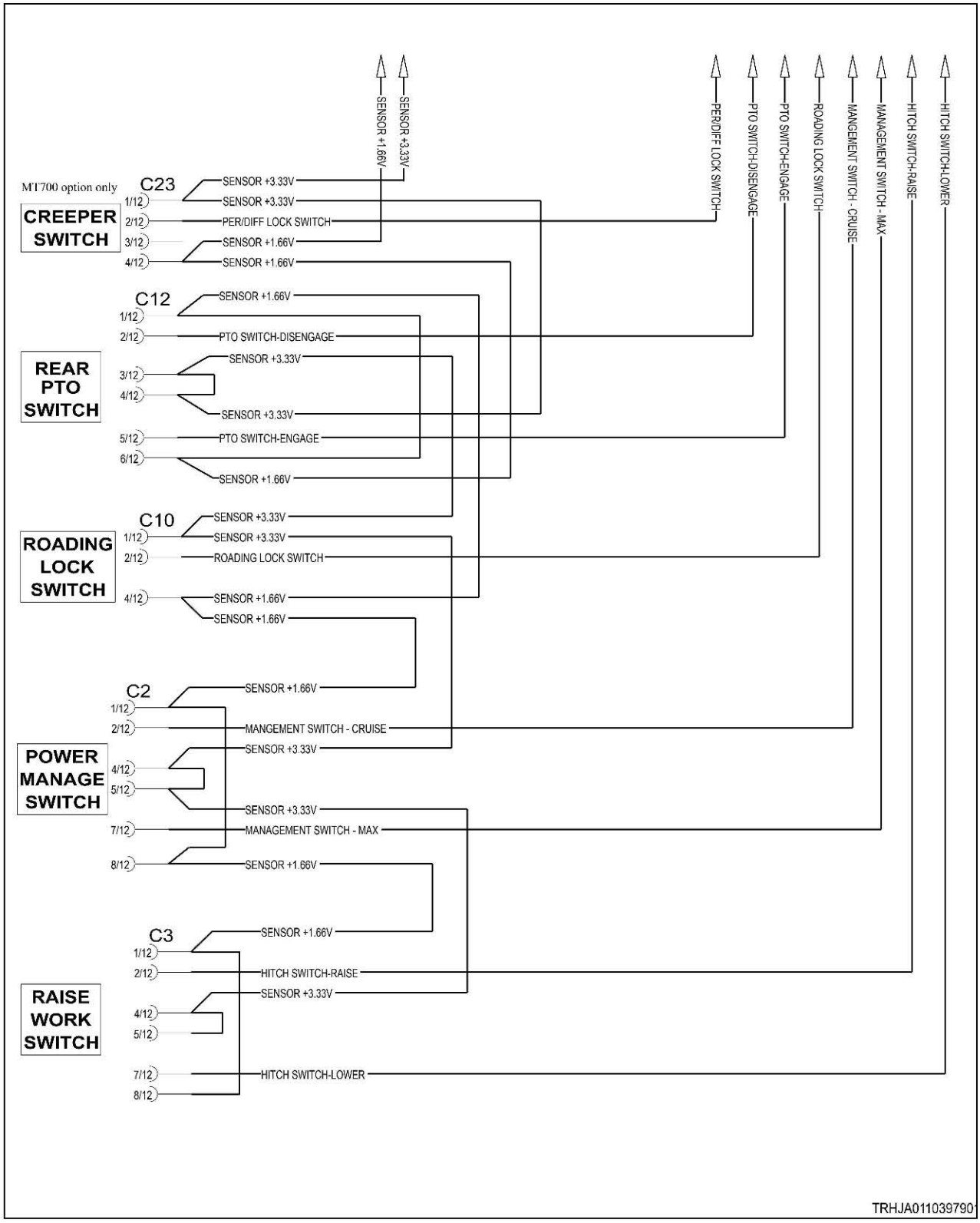
SENSOR +1.66V
SENSOR +3.33V
PER/DIFF LOCK SWITCH
PTO SWITCH-DISENGAGE
PTO SWITCH-ENGAGE
ROADING LOCK SWITCH
MANGEMENT SWITCH - CRUISE
MANAGEMENT SWITCH - MAX
HITCH SWITCH-RAISE
HITCH SWITCH-LOWER
MT700 option only
CREEPER SWITCH
C23
1/12 SENSOR +3.33V
SENSOR +3.33V
2/12 PER/DIFF LOCK SWITCH
3/12 SENSOR +1.66V
4/12 SENSOR +1.66V
C12
1/12 SENSOR +1.66V
2/12 PTO SWITCH-DISENGAGE
REAR PTO SWITCH
3/12 SENSOR +3.33V
4/12
SENSOR +3.33V
5/12 PTO SWITCH-ENGAGE
6/12
SENSOR +1.66V
C10
ROADING LOCK SWITCH
1/12 SENSOR +3.33V
SENSOR +3.33V
2/12 ROADING LOCK SWITCH
4/12 SENSOR +1.66V
SENSOR +1.66V
C2
1/12 SENSOR +1.66V
2/12 MANGEMENT SWITCH - CRUISE
POWER MANAGE SWITCH
SENSOR +3.33V
4/12
5/12
SENSOR +3.33V
7/12 MANAGEMENT SWITCH - MAX
8/12 SENSOR +1.66V
C3
SENSOR +1.66V
1/12
2/12 HITCH SWITCH-RAISE
SENSOR +3.33V
RAISE WORK SWITCH
4/12
5/12
7/12 HITCH SWITCH-LOWER
8/12
TRHJA011039790

Fig. 468

10.7.78.2 Upshift switch



Fig. 469 Switch pinout

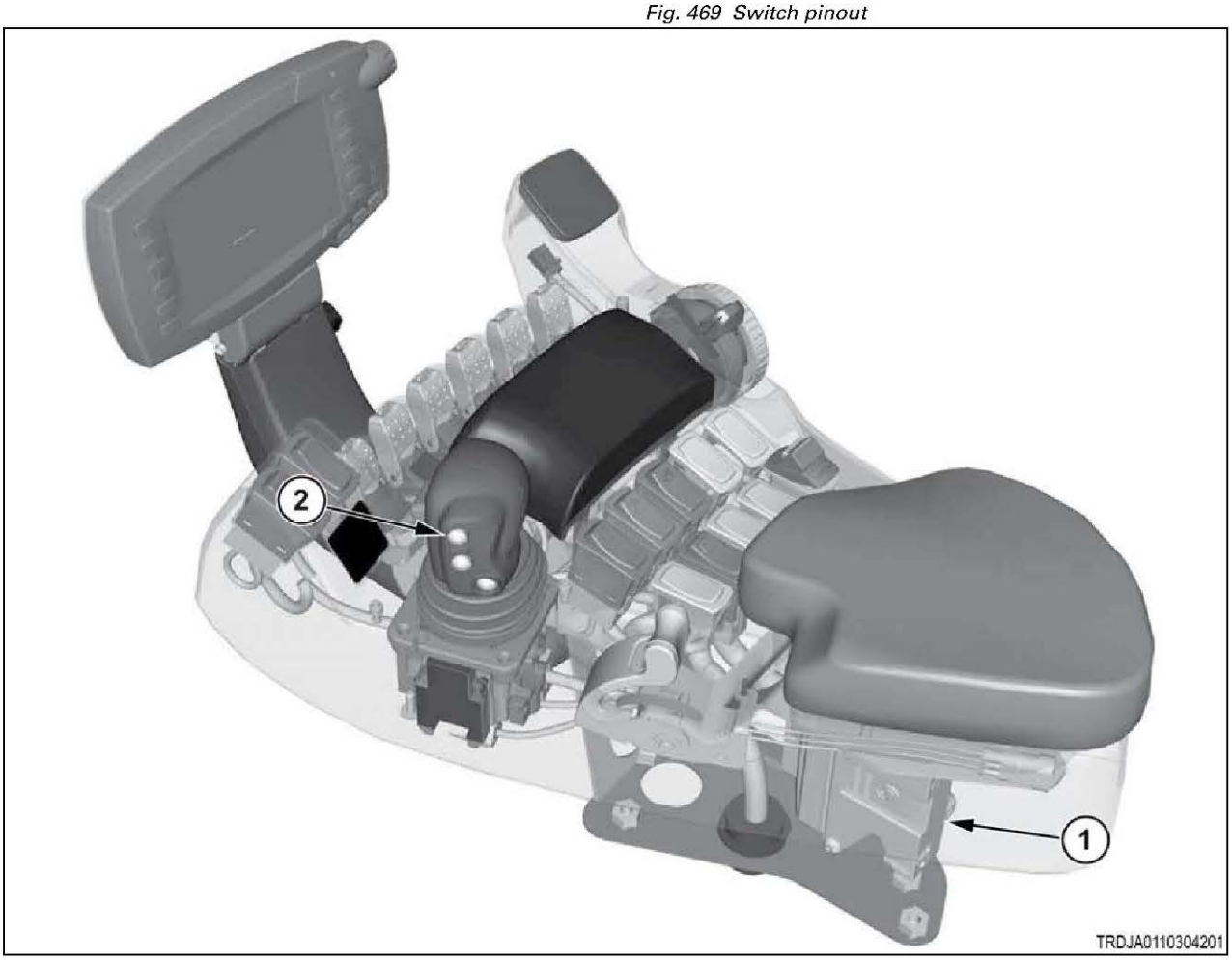

Fig. 470

(1)	Armrest module
(2)	Upshift switch

10.7.79 Code SA 05 SPN 3652 FMI 03

The upshift switch signal voltage is above normal.

The signal voltage is higher than the 3.33-volt supply. The most likely cause is a short circuit to a higher voltage circuit.

The switch is a single-pole, double-throw (SPDT) type switch, except the "common" terminal is the data output instead of a power source. The 2 other contacts are connected to 3.33-volt power and 1.66-volt power. Operating the switch selects one of these voltages for the signal output. This error will likely be accompanied by a power supply error too. This information can be used to isolate the cause.

Diagnosis and solution

1. Determine when this error is reported.

a) Turn the key start switch to the on position.

b) Check for this error code (SA 05 SPN 3652 FMI 03) as you operate the switch between on and off states.

Note that power supply errors will likely also be reported, as noted below.

Result

- The error is reported only when the switch is in the off position.

  Error code SA 05 SPN 3511 FMI 03 (3.33V power) is likely also reported.

  Diagnose the power supply error code first.

  Stop.
- The error is reported only when the switch is in the on position.

  Error code SA 05 SPN 3510 FMI 03 (1.66V power) is likely also reported.

  Diagnose the power supply error code first.

  Stop.
- The error is reported regardless of switch position.

  The signal wire is shorted to some voltage source.

  Repair or replace the harness.

  See step 2 to validate the repair.

2. Check if the fault code remains.

a) Inspect and clean the harness connector contacts.

b) Connect all the connectors.

c) Turn the battery disconnect switch to the on position.

d) Turn the key start switch to the on position.

e) Operate the machine at low idle.

f) Check if the fault code remains.

Result

- SPN 3652 FMI 03 is not active.

  Stop.
- SPN 3652 FMI 03 is active.

  Failure of the armrest module is possible but not common. Exit the procedure and do the procedure again. If the fault code remains active, replace the armrest module.

  Stop.

10.7.79.1 Transmission control lever electrical schematic

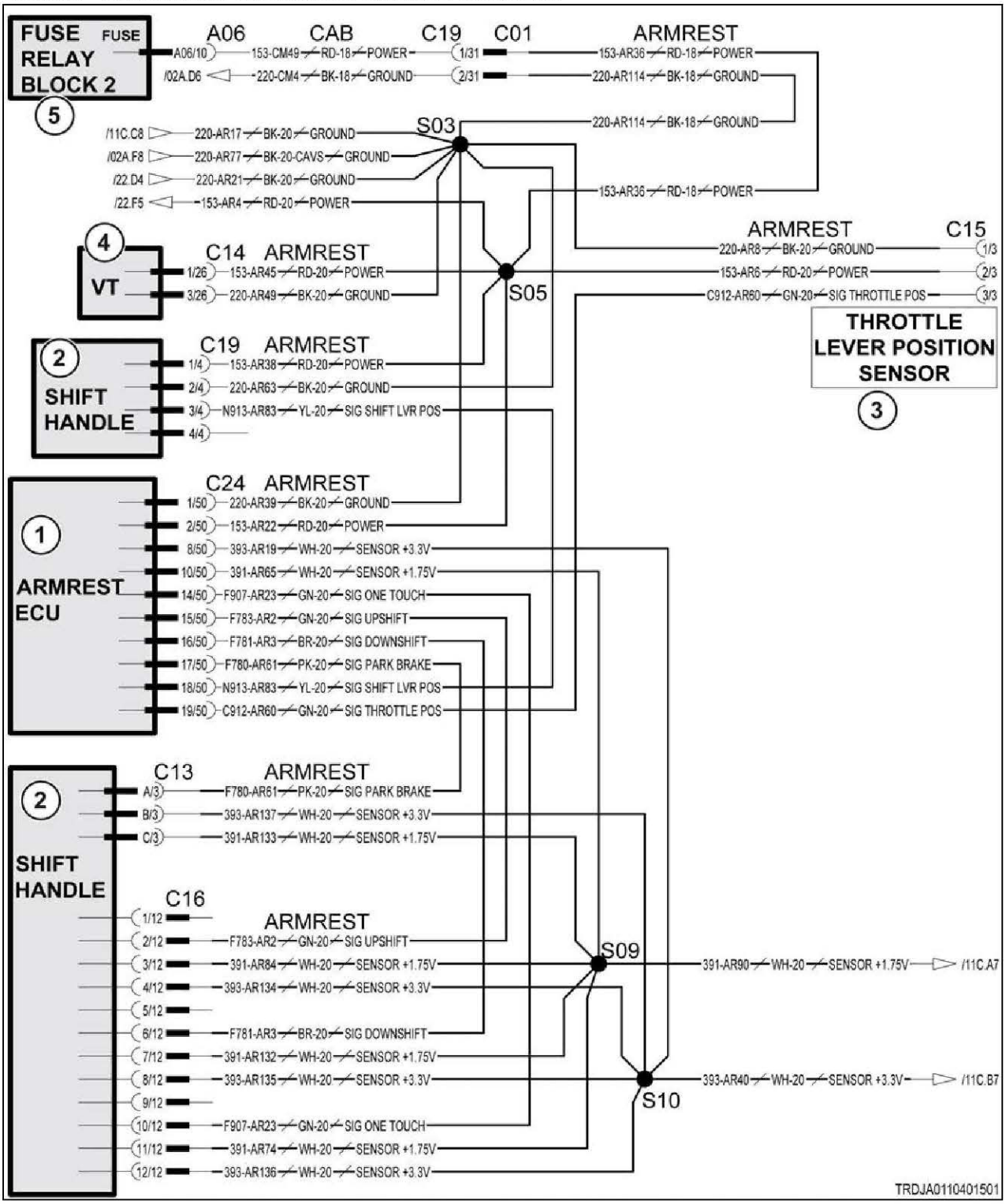

Fig. 471

Schematic legend		
Item	**Schematic term**	**Description**
1	ARMREST ECU	Armrest module
2	SHIFT HANDLE	Transmission control lever
3	THROTTLE LEVER POSITION SENSOR	Throttle lever position sensor
4	VT	Virtual terminal
5	FUSE RELAY BLOCK 2	Fuse relay block 2
--	SIG THROTTLE POS	Signal throttle position
--	SIG UPSHIFT	Signal upshift
--	SIG DOWNSHIFT	Signal downshift
--	SIG ONE TOUCH	Signal one touch
--	SIG PARK BRAKE	Signal park brake
--	SIG SHIFT LVR POSITION	Signal transmission control lever

1.7v and 3.3v schematics

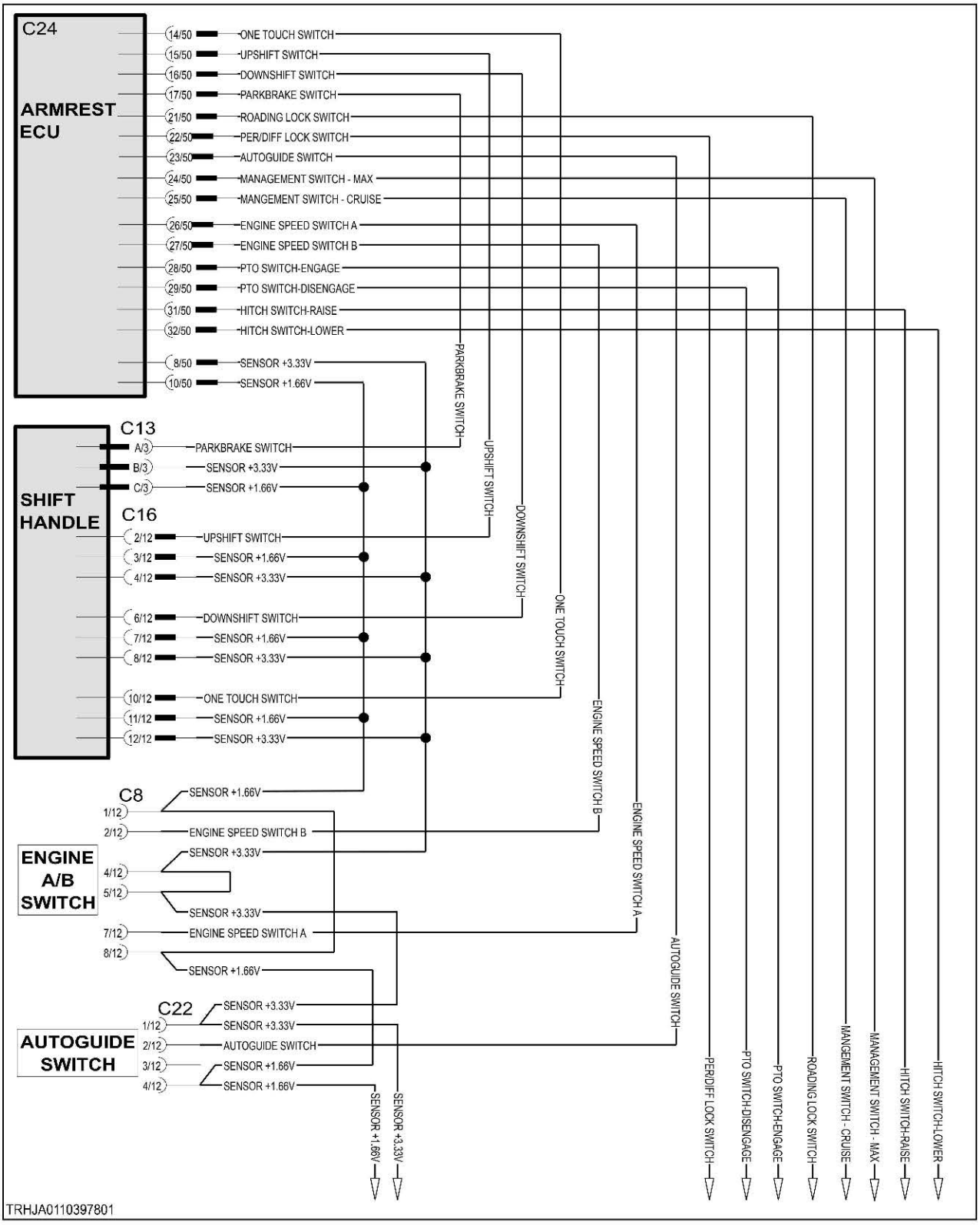

Fig. 472

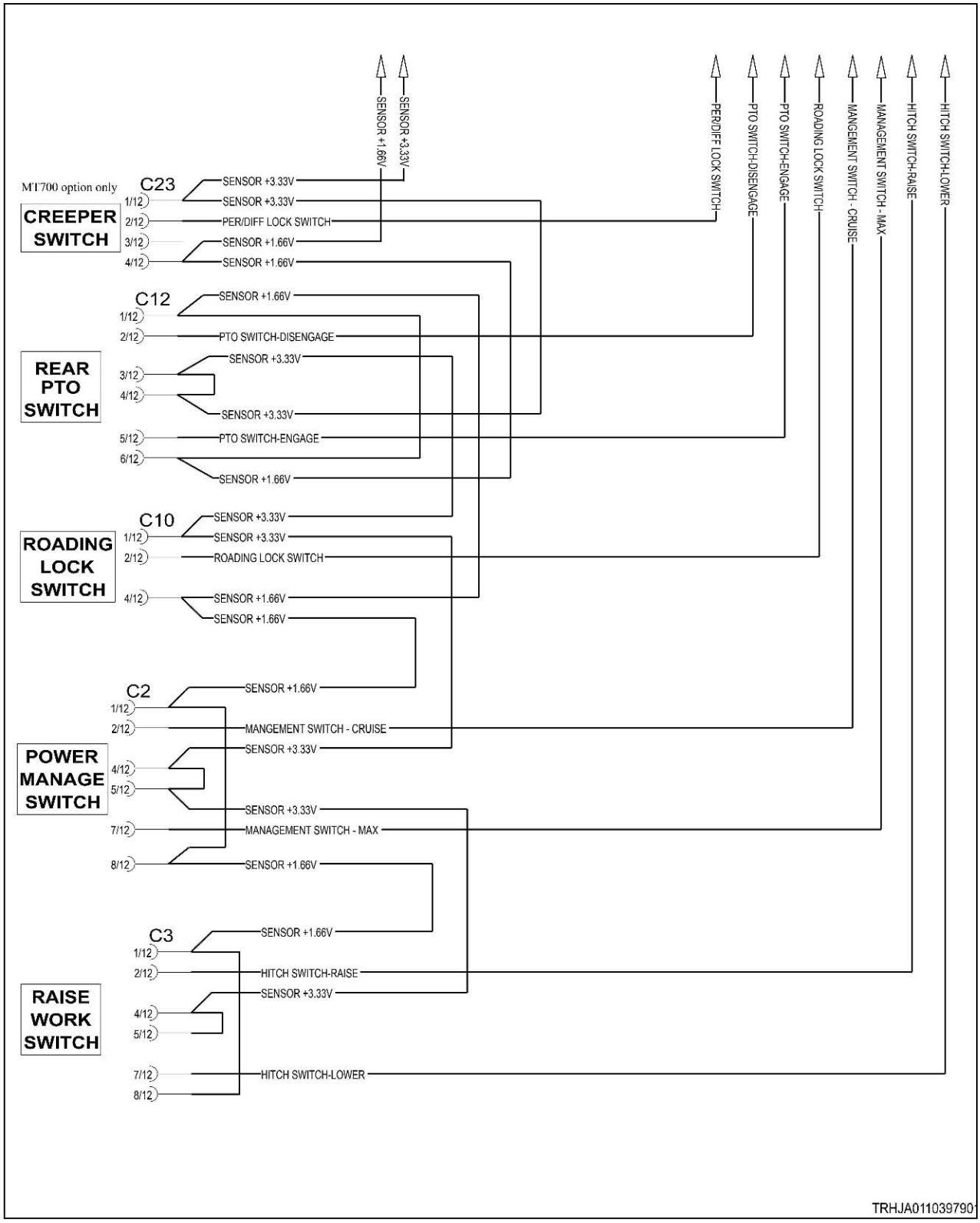
SENSOR +1.66V
SENSOR +3.33V
PER/DIFF LOCK SWITCH
PTO SWITCH-DISENGAGE
PTO SWITCH-ENGAGE
ROADING LOCK SWITCH
MANGEMENT SWITCH - CRUISE
MANAGEMENT SWITCH - MAX
HITCH SWITCH-RAISE
HITCH SWITCH-LOWER
MT700 option only
CREEPER SWITCH
C23
1/12 SENSOR +3.33V
SENSOR +3.33V
2/12 PER/DIFF LOCK SWITCH
3/12 SENSOR +1.66V
4/12 SENSOR +1.66V
C12
1/12 SENSOR +1.66V
2/12 PTO SWITCH-DISENGAGE
REAR PTO SWITCH
3/12 SENSOR +3.33V
4/12
SENSOR +3.33V
5/12 PTO SWITCH-ENGAGE
6/12
SENSOR +1.66V
C10
ROADING LOCK SWITCH
1/12 SENSOR +3.33V
SENSOR +3.33V
2/12 ROADING LOCK SWITCH
4/12 SENSOR +1.66V
SENSOR +1.66V
C2
1/12 SENSOR +1.66V
2/12 MANGEMENT SWITCH - CRUISE
POWER MANAGE SWITCH
SENSOR +3.33V
4/12
5/12
SENSOR +3.33V
7/12 MANAGEMENT SWITCH - MAX
8/12 SENSOR +1.66V
C3
SENSOR +1.66V
1/12
2/12 HITCH SWITCH-RAISE
SENSOR +3.33V
RAISE WORK SWITCH
4/12
5/12
7/12 HITCH SWITCH-LOWER
8/12
TRHJA011039790

Fig. 473

10.7.79.2 Upshift switch



Fig. 474 Switch pinout

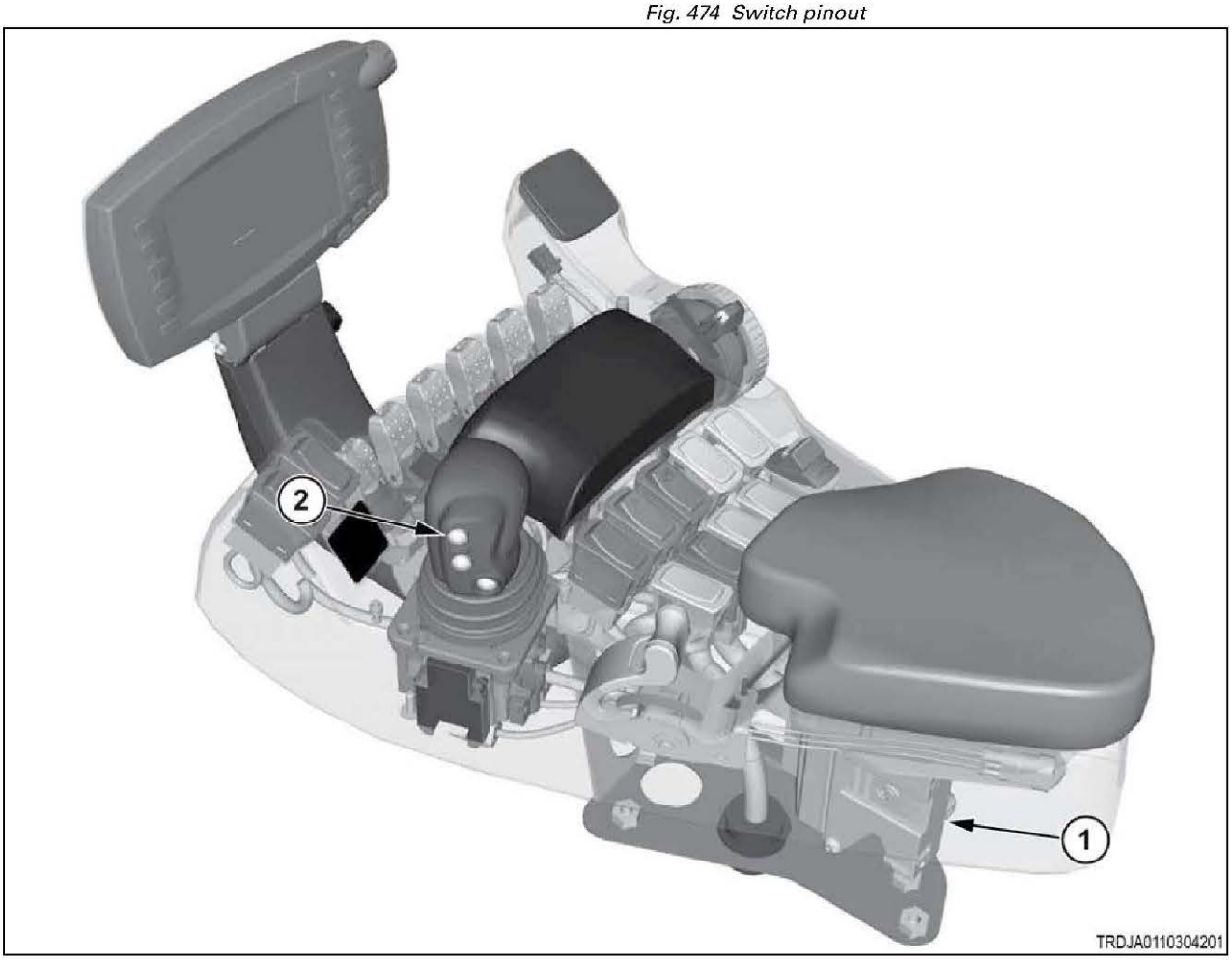

Fig. 475

(1)	Armrest module
(2)	Upshift switch

10.7.80 Code SA 05 SPN 3652 FMI 04

The upshift switch signal voltage is below normal.

The signal voltage is lower than the 1.66-volt supply. The most likely cause is a short circuit to ground.

The switch is a single-pole, double-throw (SPDT) type switch, except the "common" terminal is the data output instead of a power source. The 2 other contacts are connected to 3.33-volt power and 1.66-volt power. Operating the switch selects one of these voltages for the signal output. This error will likely be accompanied by a power supply error too. This information can be used to isolate the cause.

Diagnosis and solution

1. Determine when this error is reported.

a) Turn the key start switch to the on position.

b) Check for this error code (SA 05 SPN 3652 FMI 04) as you operate the switch between on and off states.

Note that power supply errors will likely also be reported, as noted below.

Result

- The error is reported only when the switch is in the off position.

  Error code SA 05 SPN 3511 FMI 04 (3.33V power) is likely also reported.

  Diagnose the power supply error code first.

  Stop.
- The error is reported only when the switch is in the on position.

  Error code SA 05 SPN 3510 FMI 04 (1.66V power) is likely also reported.

  Diagnose the power supply error code first.

  Stop.
- The error is reported regardless of switch position.

  The signal wire is shorted to ground.

  Repair or replace the harness.

  See step 2 to validate the repair.

2. Check if the fault code remains.

a) Inspect and clean the harness connector contacts.

b) Connect all the connectors.

c) Turn the battery disconnect switch to the on position.

d) Turn the key start switch to the on position.

e) Operate the machine at low idle.

f) Check if the fault code remains.

Result

- SPN 3652 FMI 04 is not active.

  Stop.
- SPN 3652 FMI 04 is active.

  Failure of the armrest module is possible but not common. Exit the procedure and do the procedure again. If the fault code remains active, replace the armrest module.

  Stop.

10.7.80.1 Transmission control lever electrical schematic

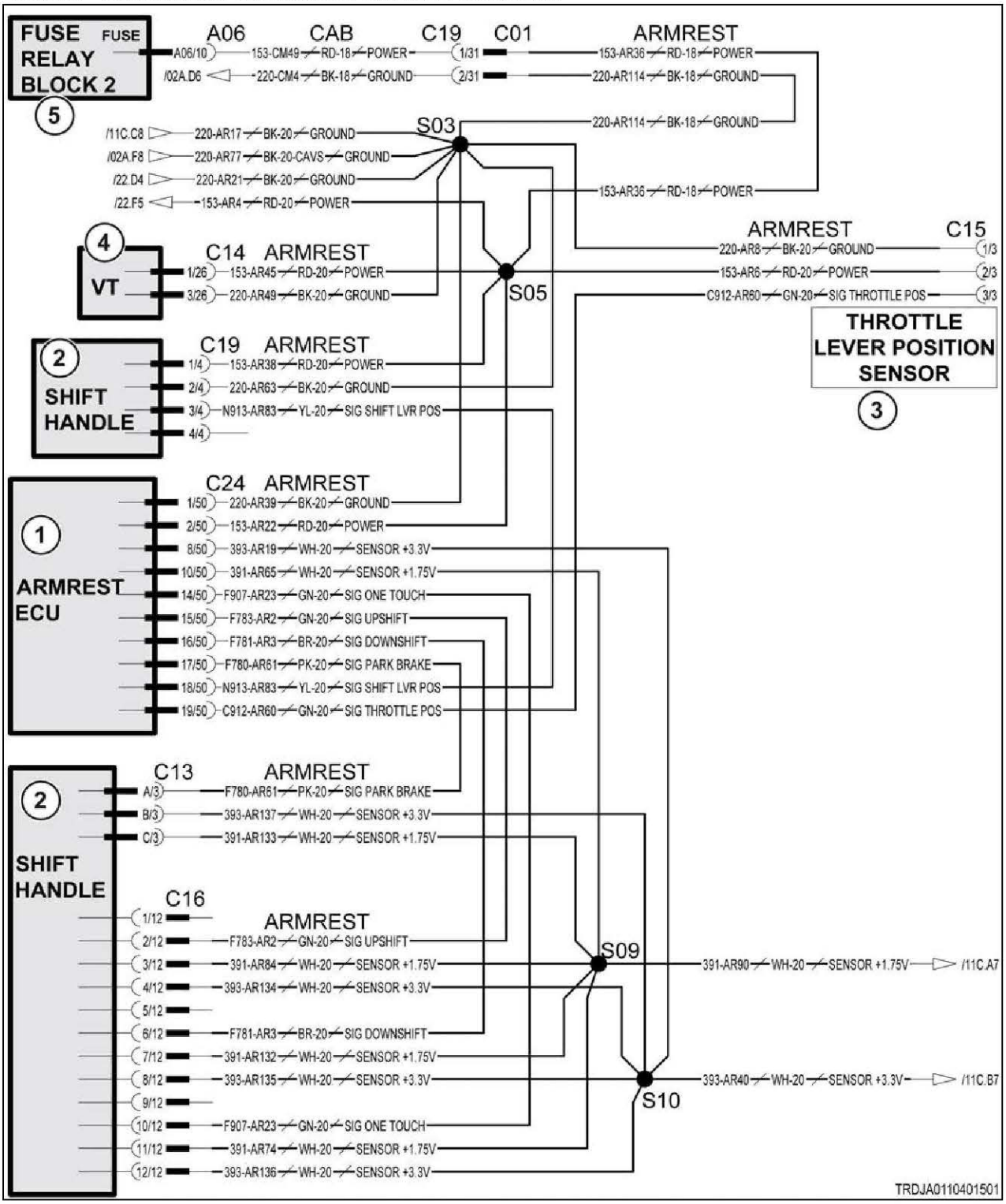

Fig. 476

Schematic legend		
Item	**Schematic term**	**Description**
1	ARMREST ECU	Armrest module
2	SHIFT HANDLE	Transmission control lever
3	THROTTLE LEVER POSITION SENSOR	Throttle lever position sensor
4	VT	Virtual terminal
5	FUSE RELAY BLOCK 2	Fuse relay block 2
--	SIG THROTTLE POS	Signal throttle position
--	SIG UPSHIFT	Signal upshift
--	SIG DOWNSHIFT	Signal downshift
--	SIG ONE TOUCH	Signal one touch
--	SIG PARK BRAKE	Signal park brake
--	SIG SHIFT LVR POSITION	Signal transmission control lever

1.7v and 3.3v schematics

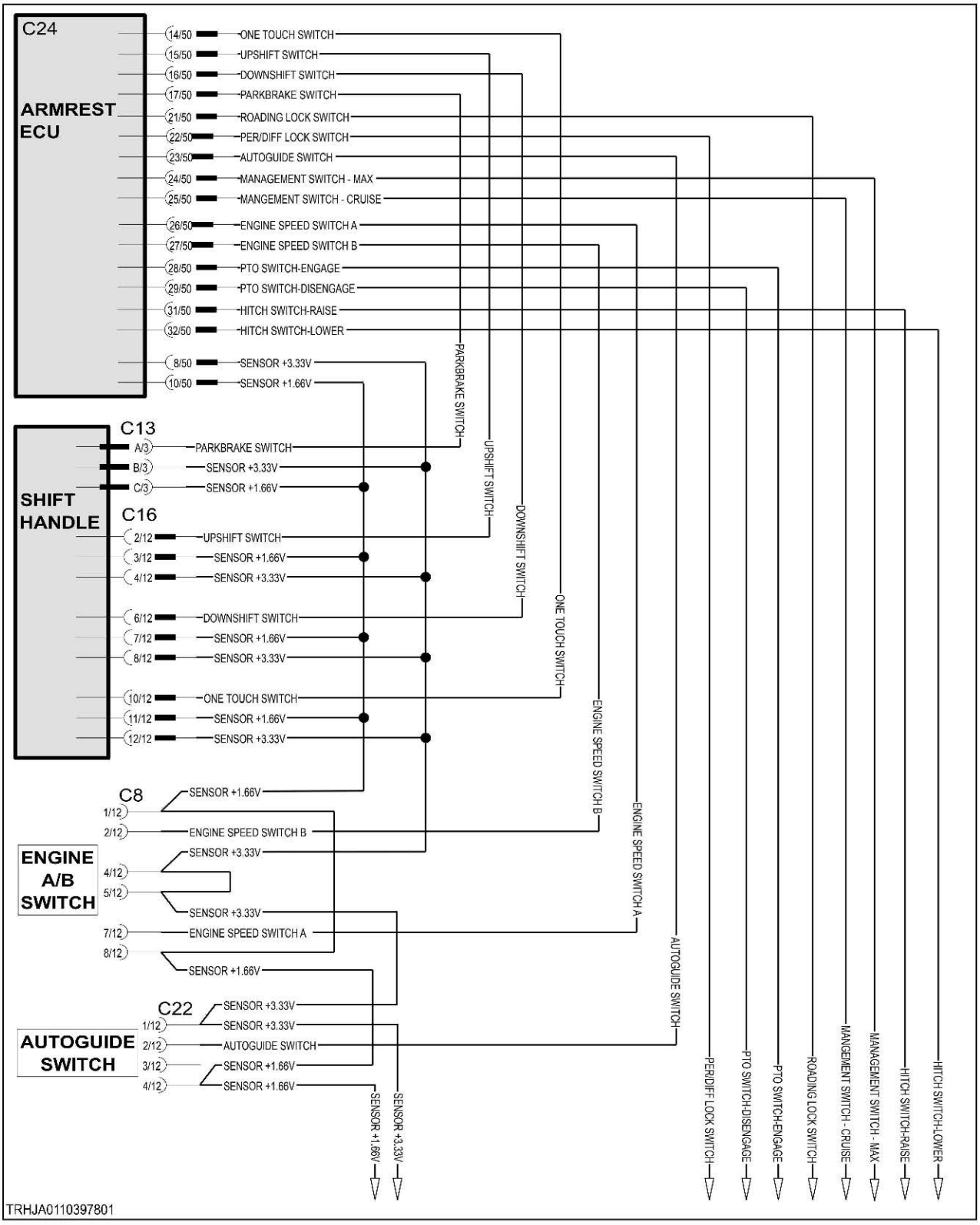

Fig. 477

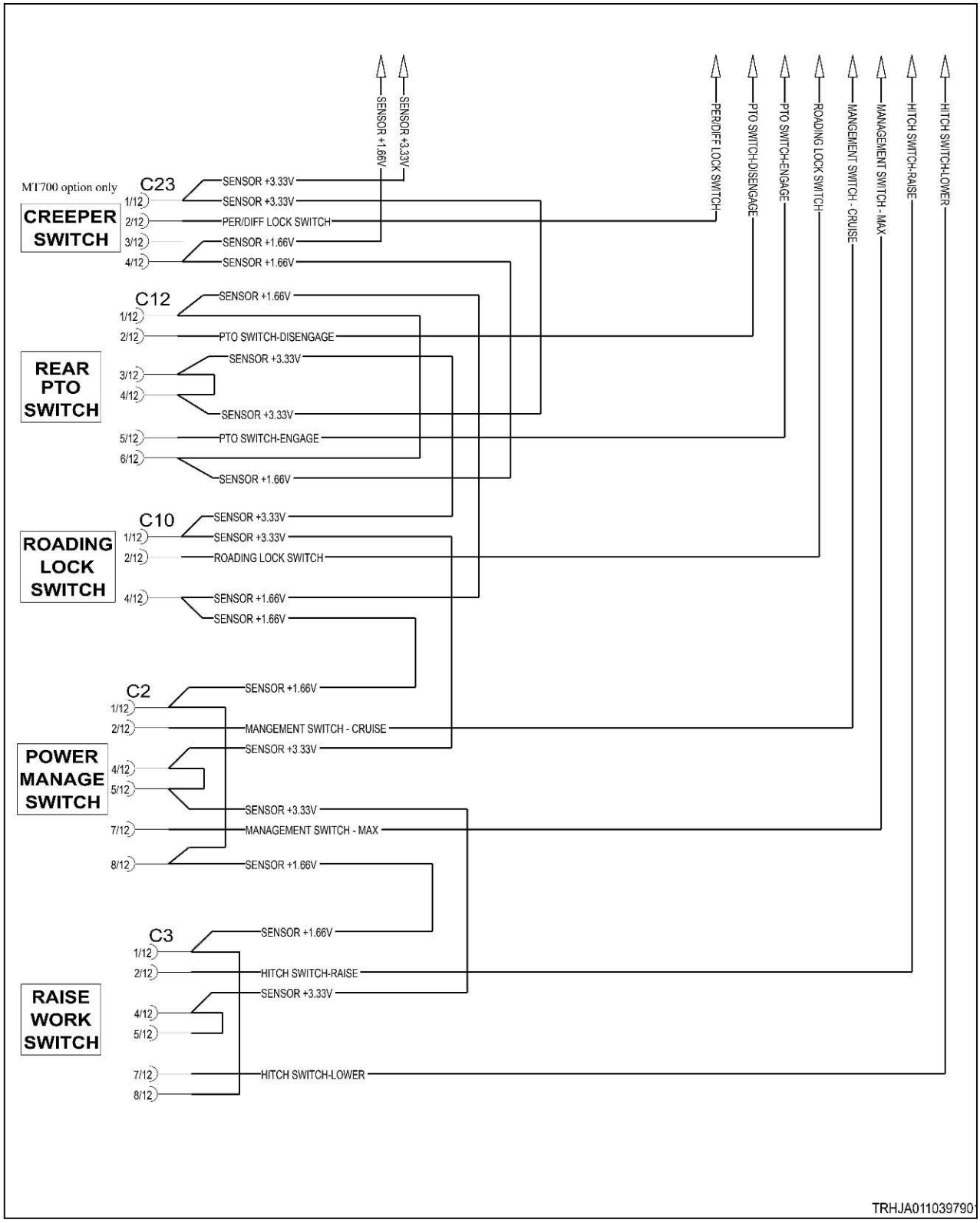
SENSOR +1.66V
SENSOR +3.33V
PER/DIFF LOCK SWITCH
PTO SWITCH-DISENGAGE
PTO SWITCH-ENGAGE
ROADING LOCK SWITCH
MANGEMENT SWITCH - CRUISE
MANAGEMENT SWITCH - MAX
HITCH SWITCH-RAISE
HITCH SWITCH-LOWER
MT700 option only
CREEPER SWITCH
C23
1/12 SENSOR +3.33V
2/12 SENSOR +3.33V
3/12 PER/DIFF LOCK SWITCH
4/12 SENSOR +1.66V
SENSOR +1.66V
REAR PTO SWITCH
C12
1/12 SENSOR +1.66V
2/12 PTO SWITCH-DISENGAGE
3/12 SENSOR +3.33V
4/12
SENSOR +3.33V
5/12 PTO SWITCH-ENGAGE
6/12
SENSOR +1.66V
ROADING LOCK SWITCH
C10
1/12 SENSOR +3.33V
SENSOR +3.33V
2/12 ROADING LOCK SWITCH
4/12 SENSOR +1.66V
SENSOR +1.66V
POWER MANAGE SWITCH
C2
1/12 SENSOR +1.66V
2/12 MANGEMENT SWITCH - CRUISE
SENSOR +3.33V
4/12
5/12
SENSOR +3.33V
7/12 MANAGEMENT SWITCH - MAX
8/12 SENSOR +1.66V
RAISE WORK SWITCH
C3
1/12 SENSOR +1.66V
2/12 HITCH SWITCH-RAISE
SENSOR +3.33V
4/12
5/12
7/12 HITCH SWITCH-LOWER
8/12
TRHJA011039790

Fig. 478

10.7.80.2 Upshift switch



Fig. 479 Switch pinout

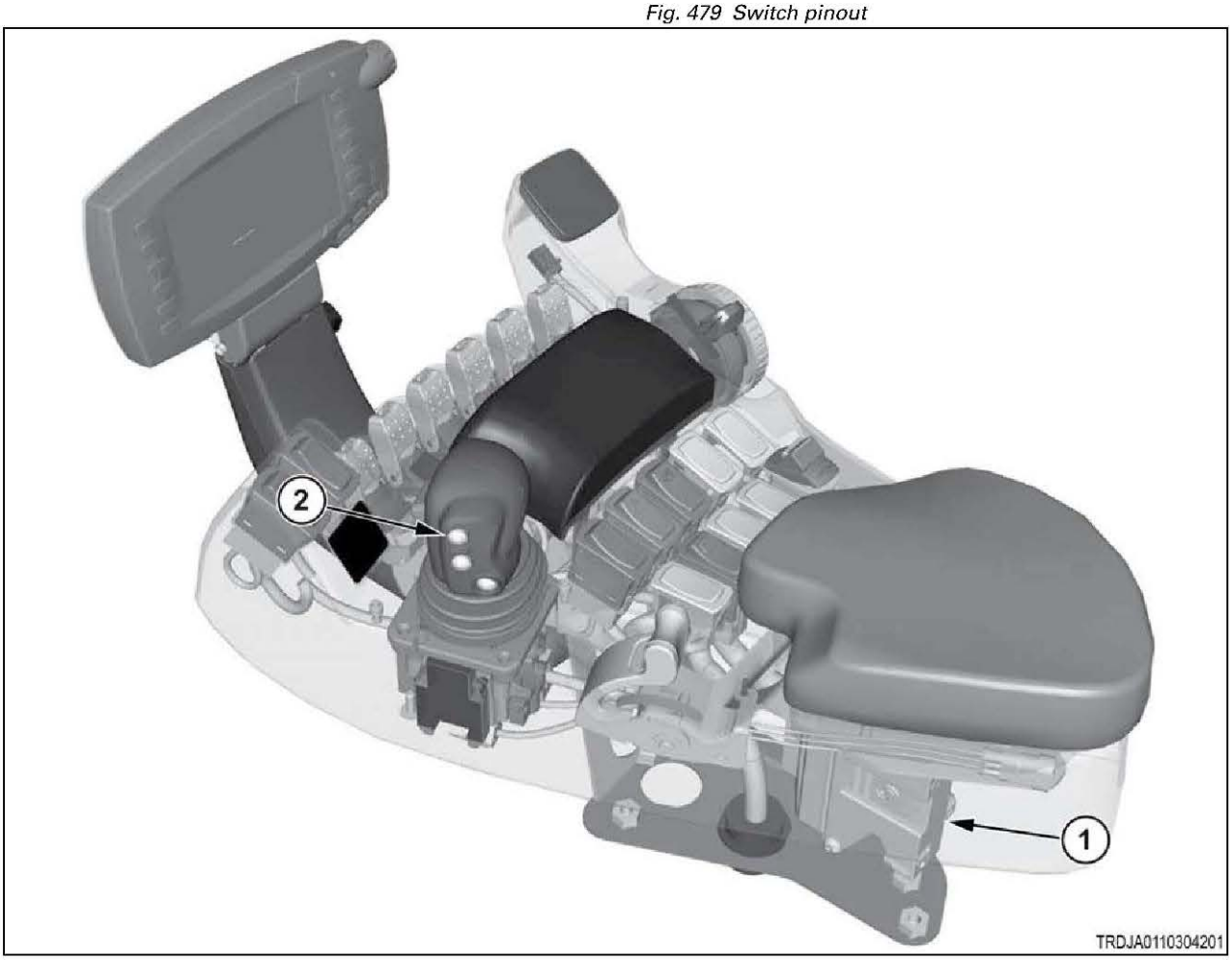

Fig. 480

(1)	Armrest module
(2)	Upshift switch

10.7.81 Code SA 05 SPN 3652 FMI 05

Open circuit in the transmission control lever, upshift switch circuit.

The switch is a single-pole, double-throw (SPDT) type switch, except the "common" terminal is the data output instead of a power source. The 2 other contacts are connected to 3.33-volt power and 1.66-volt power. Operating the switch selects one of these voltages for the signal output. These 2 power circuits are shared by several other function switches on the armrest. This knowledge can aid in diagnosing the fault.

Diagnosis and solution

1. Determine when this error is reported.

a) Turn the key start switch to the on position.

b) Check whether the error code is reported as you operate the switch between on and off states.

Result

- The error is reported only when the switch is in the off position.

  The open circuit is in the 3.33V power circuit.

  See step 2 to isolate the location.
- The error is reported only when the switch is in the on position.

  The open circuit is in the 1.66V power circuit.

  See step 2 to isolate the location.
- The error is reported regardless of switch position.

  The open circuit is in the signal circuit.

  Repair or replace the armrest harness.

  See step 3 to validate the repair.

2. Isolate the power circuit open circuit.

a) Operate all other shift lever switches, and at least one downstream armrest switches, according to the list below, from their off to on positions.

Electrical sequence of switches, starting from the armrest module.

1. Shift Handle (3 pushbuttons)
2. Engine A/B switch
3. Autoguide switch
4. Creeper switch
5. Rear PTO
6. Roading Lock switch
7. Power management (cruise/full) switch
8. Hitch Raise/Work switch

b) Observe which other switches (if any) exhibit similar open circuit error codes.

Result

- At least one upstream switch reported a similar error.

  The open circuit lies at, or just upstream from, that switch.

  Repair or replace the armrest harness.

  See step 3 to validate the repair.

- Only downstream switches reported similar errors.

  The harness is open circuited at this switch location.

  Repair or replace the harness.

  See step 3 to validate the repair.
- No other switches reported similar errors.

  The switch is at fault.

  Replace the switch.

  See step 3 to validate the repair.

3. Check if the fault code remains.

a) Inspect and clean the harness connector contacts.
b) Connect all the connectors.
c) Turn the battery disconnect switch to the on position.
d) Turn the key start switch to the on position.
e) Operate the machine at low idle.
f) Check if the fault code remains.

Result

- SPN 3652 FMI 05 is not active.

  Stop.
- SPN 3652 FMI 05 is active.

  Failure of the armrest module is possible but not common. Exit the procedure and do the procedure again. If the fault code remains active, replace the armrest module.

  Stop.

10.7.81.1 Transmission control lever electrical schematic

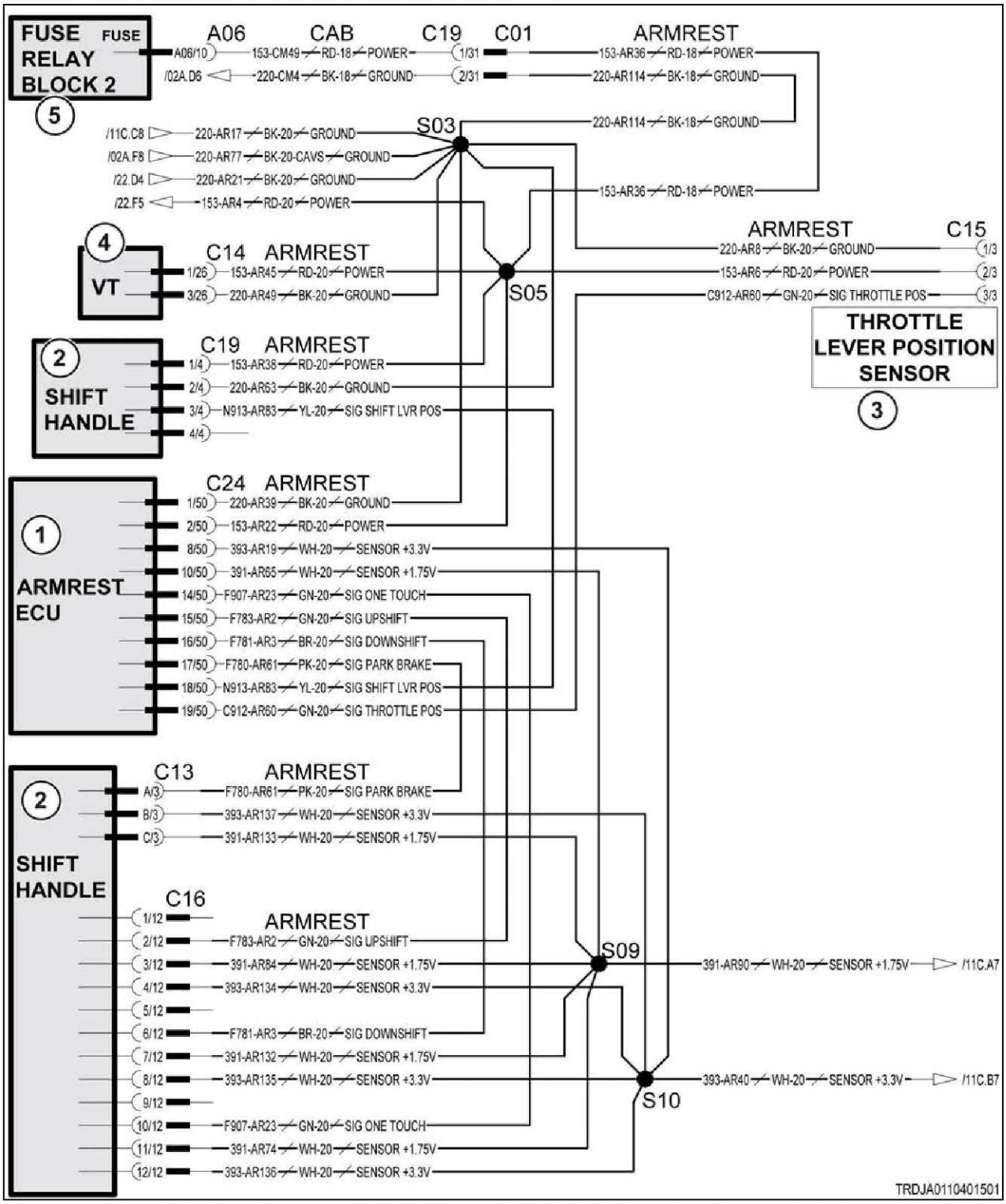

Fig. 481

Schematic legend		
Item	**Schematic term**	**Description**
1	ARMREST ECU	Armrest module
2	SHIFT HANDLE	Transmission control lever
3	THROTTLE LEVER POSITION SENSOR	Throttle lever position sensor
4	VT	Virtual terminal
5	FUSE RELAY BLOCK 2	Fuse relay block 2
--	SIG THROTTLE POS	Signal throttle position
--	SIG UPSHIFT	Signal upshift
--	SIG DOWNSHIFT	Signal downshift
--	SIG ONE TOUCH	Signal one touch
--	SIG PARK BRAKE	Signal park brake
--	SIG SHIFT LVR POSITION	Signal transmission control lever

1.7v and 3.3v schematics

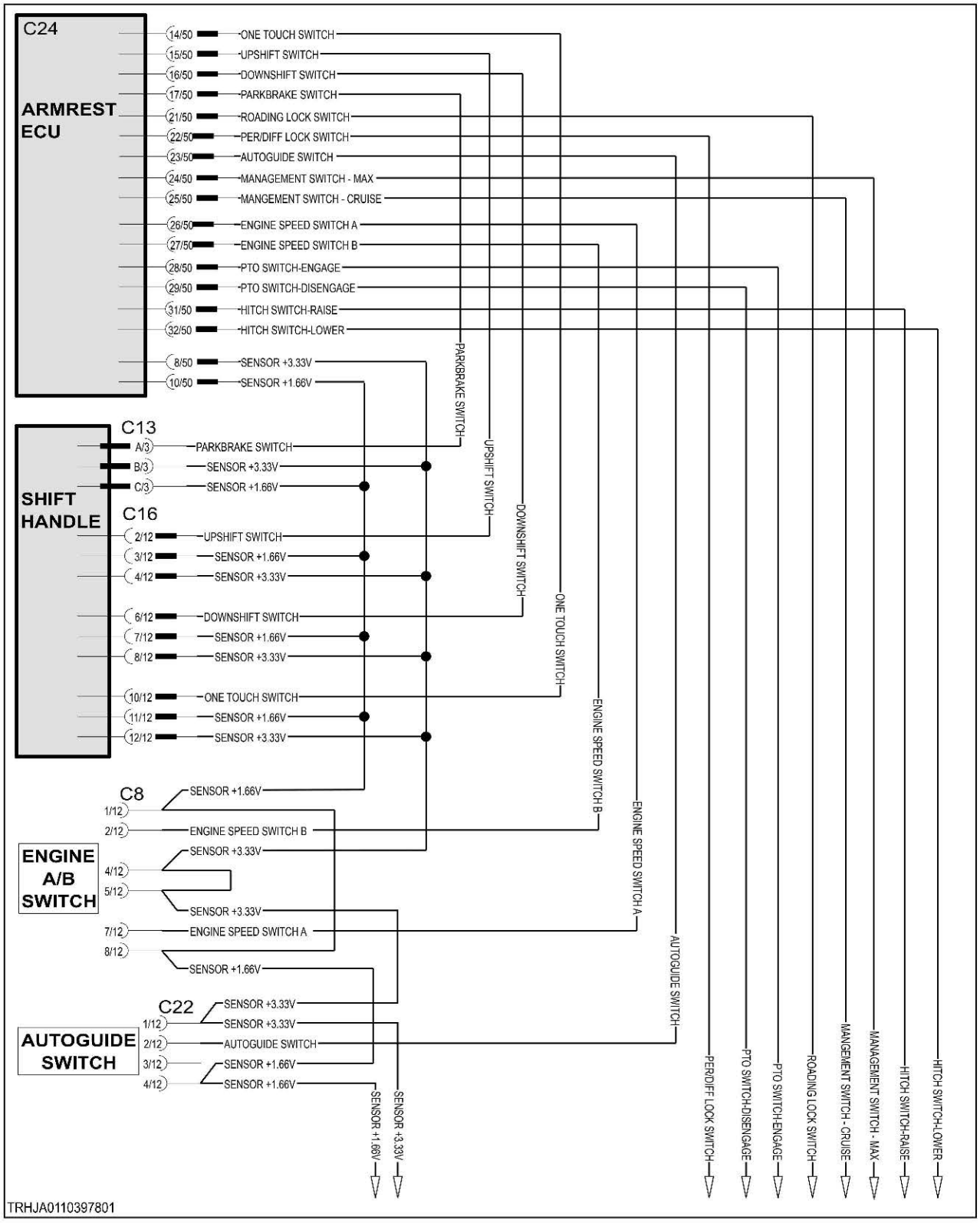

Fig. 482

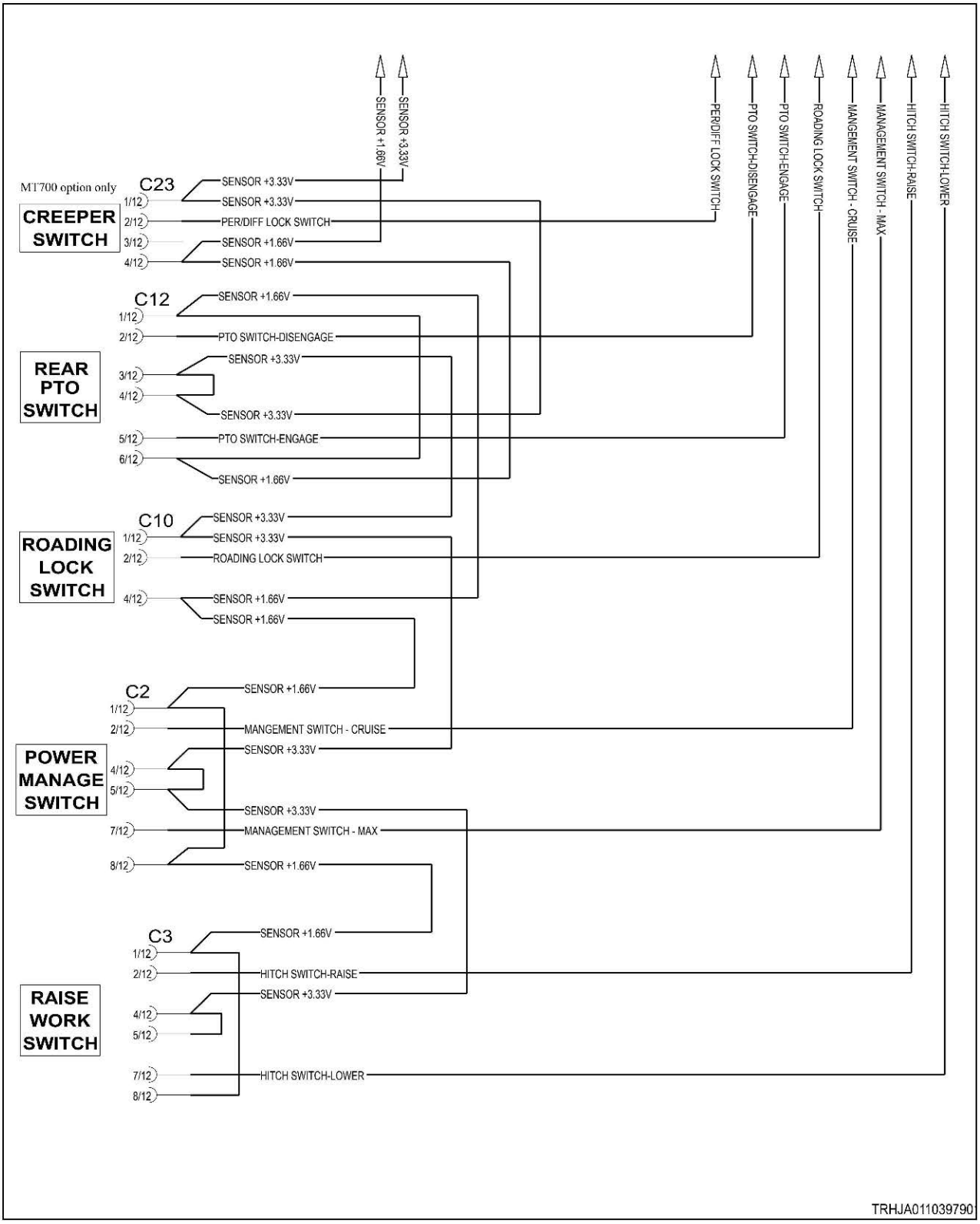
SENSOR +1.66V
SENSOR +3.33V
PER/DIFF LOCK SWITCH
PTO SWITCH-DISENGAGE
PTO SWITCH-ENGAGE
ROADING LOCK SWITCH
MANGEMENT SWITCH - CRUISE
MANAGEMENT SWITCH - MAX
HITCH SWITCH-RAISE
HITCH SWITCH-LOWER
MT700 option only
CREEPER SWITCH
C23
1/12 SENSOR +3.33V
2/12 SENSOR +3.33V
3/12 PER/DIFF LOCK SWITCH
4/12 SENSOR +1.66V
SENSOR +1.66V
C12
1/12 SENSOR +1.66V
2/12 PTO SWITCH-DISENGAGE
REAR PTO SWITCH
3/12 SENSOR +3.33V
4/12 SENSOR +3.33V
5/12 PTO SWITCH-ENGAGE
6/12 SENSOR +1.66V
C10
ROADING LOCK SWITCH
1/12 SENSOR +3.33V
SENSOR +3.33V
2/12 ROADING LOCK SWITCH
4/12 SENSOR +1.66V
SENSOR +1.66V
C2
1/12 SENSOR +1.66V
2/12 MANGEMENT SWITCH - CRUISE
POWER MANAGE SWITCH
SENSOR +3.33V
4/12
5/12
SENSOR +3.33V
7/12 MANAGEMENT SWITCH - MAX
8/12 SENSOR +1.66V
C3
SENSOR +1.66V
1/12
2/12 HITCH SWITCH-RAISE
SENSOR +3.33V
RAISE WORK SWITCH
4/12
5/12
7/12 HITCH SWITCH-LOWER
8/12
TRHJA011039790

Fig. 483

10.7.81.2 Upshift switch



Fig. 484 Switch pinout

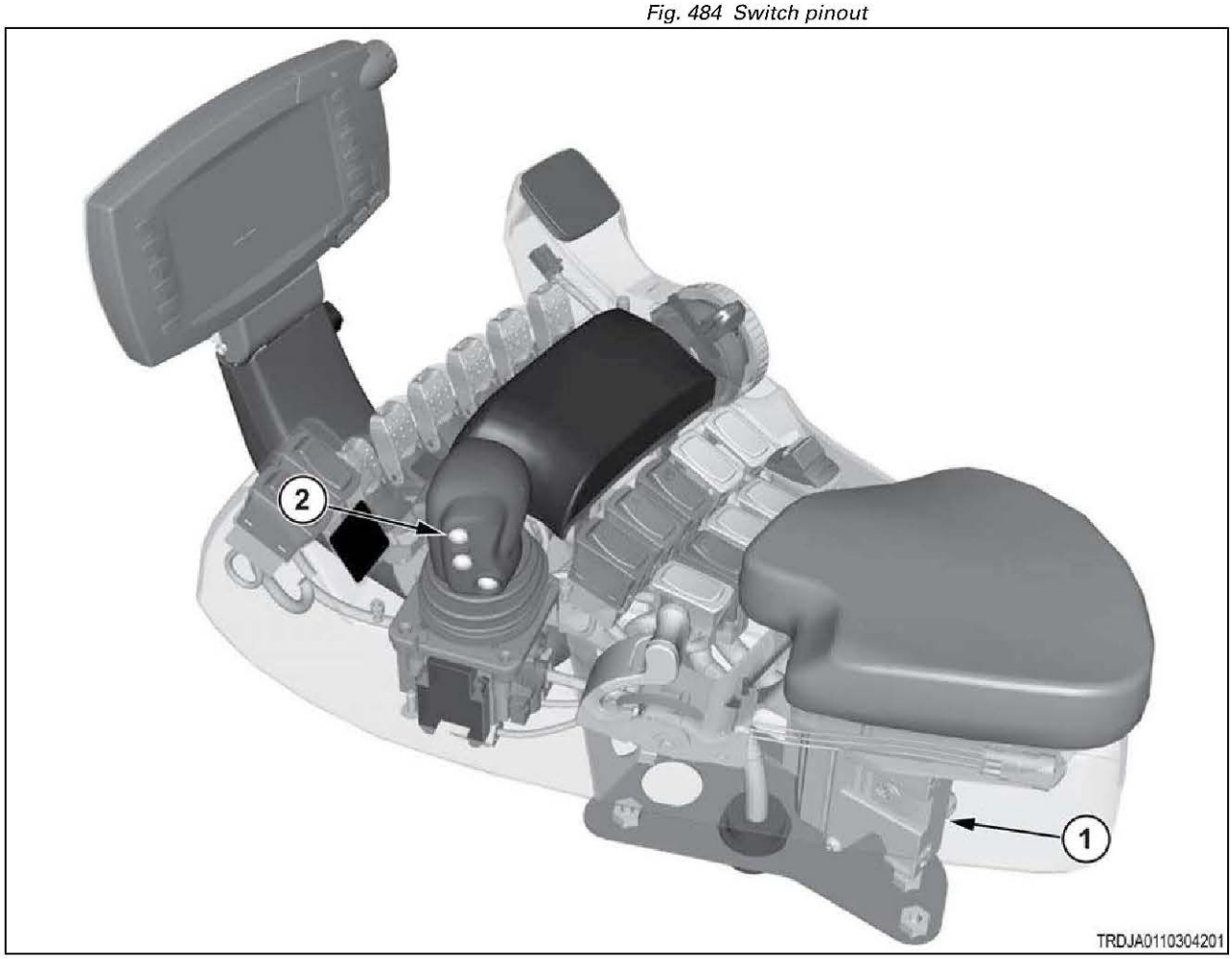

Fig. 485

(1)	Armrest module
(2)	Upshift switch

10.7.82 Code SA 05 SPN 3653 FMI 02

The downshift switch signal is erratic, intermittent, or incorrect.

The switch is a single-pole, double-throw (SPDT) type switch, except the "common" terminal is the data output instead of a power source. The 2 other contacts are connected to 3.33-volt power and 1.66-volt power. Operating the switch selects one of these voltages for the signal output. These 2 power circuits are shared by several other function switches on the armrest. This knowledge can aid in diagnosing the fault.

Diagnosis and solution

1. Check the function of downstream switches that share power circuits.

This will help isolate whether the problem is in the power or signal circuit.

a) Turn the key start switch to the on position.
b) Operate the engine A/B speed switch in both directions.
c) Check for additional error codes.

Result

- SA 05 SPN 2970 FMI 02 or SA 05 SPN 2971 FMI 02 (engine speed) errors are reported.

  Focus further examination on the power circuits between the transmission control lever and the armrest controller.

  See step 2 to check for loose connections.
- No additional error codes are reported.

  The power circuits are not suspect.

  Focus further examination on the switch signal output.

  See step 2 to check for loose connections.

2. Inspect all harness and switch connections.

a) Turn the key start switch to the off position.
b) Turn the battery disconnect switch to the off position.
c) Open the top of the armrest console.
d) Inspect and clean all connectors and connector contacts:

- Look for bent or worn pins.
- Look for deformed or oversized sockets.
- Look for corrosion on the pins and sockets. Corrosion is a sign of a loose connection.
- Look for signs of overheating. Overheating is a sign of a poor connection, and can further loosen the pin or socket mount. The whole connector body should be replaced.

e) Make sure to inspect the circuits identified in step 1 as they pass through the following connector locations:

- Switch signal at the armrest ECU C24-16.
- All contacts at the downshift switch.
- The 1.66V and 3.33V power signals at the Armrest ECU C24-8 (3.33V) and C24-10 (1.66V)

f) Repair or replace any connector or harness found faulty.

Result

- No faulty contacts were found.

  See step 3 to check the switch function.
- Faulty contacts were found and repaired.

  See step 4 to validate the repair.

3. Check the switch function.

a) Disconnect the downshift switch.

b) Check resistance between contacts 6 & 7 and 6 & 8, as you operate the switch from on and off.

- In the on-position, contacts 6 and 7 should have continuity.
- In the off-position, contacts 6 and 8 should have continuity.

Result

- Continuity checks are correct.

  See step 4 to check if the error persists.
- Continuity checks are incorrect.

  Replace the switch.

  See step 4 to validate the repair.

4. Check if the fault code remains.

a) Inspect and clean the harness connector contacts.
b) Connect all the connectors.
c) Turn the battery disconnect switch to the on position.
d) Turn the key start switch to the on position.
e) Operate the machine at low idle.
f) Check if the fault code remains.

Result

- SPN 3653 FMI 02 is not active.

  Stop.
- SPN 3653 FMI 02 is active.

  Failure of the armrest module is possible but not common. Exit the procedure and do the procedure again. If the fault code remains active, replace the armrest module.

  Stop.

10.7.82.1 Transmission control lever electrical schematic

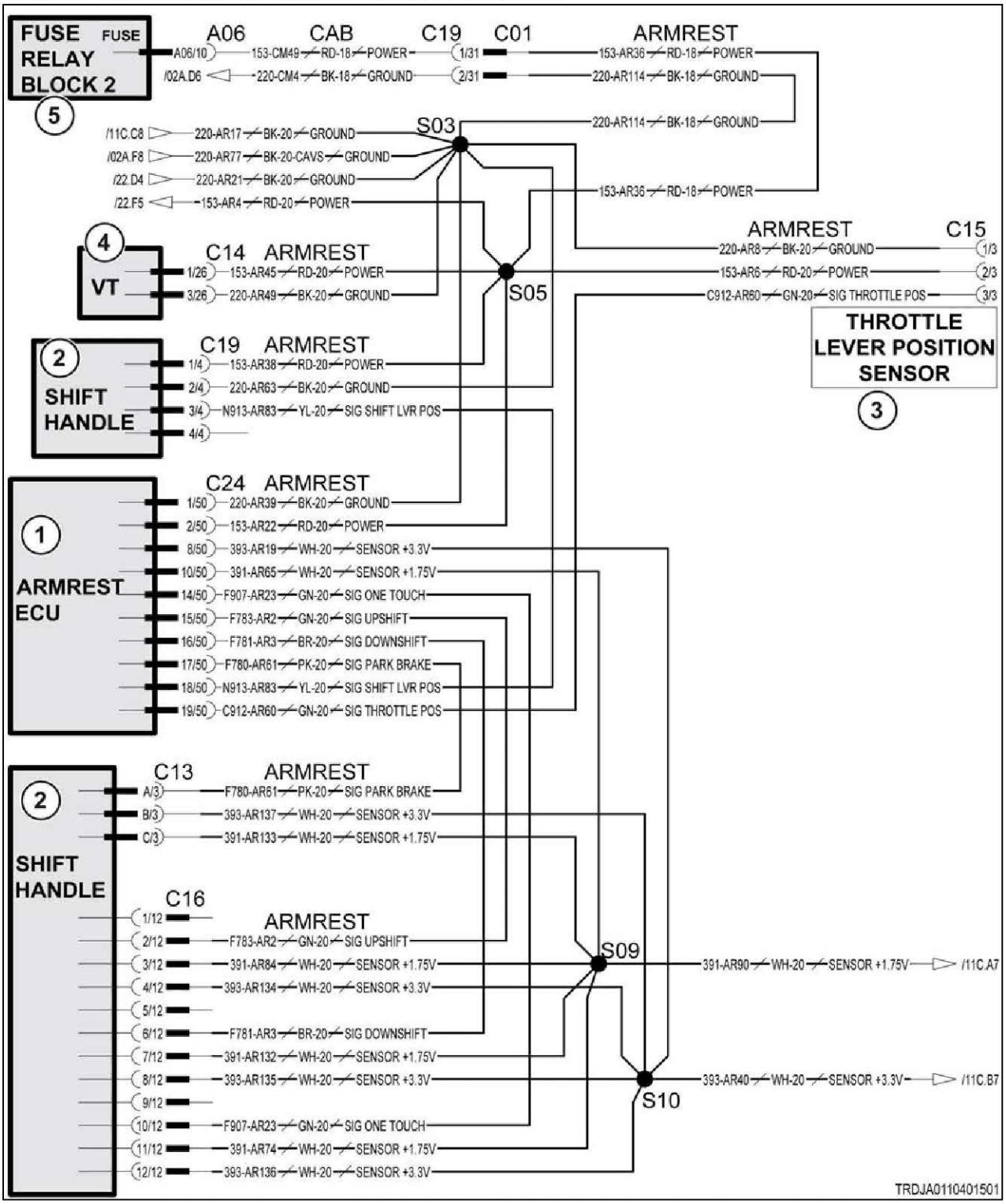

Fig. 486

Schematic legend		
Item	**Schematic term**	**Description**
1	ARMREST ECU	Armrest module
2	SHIFT HANDLE	Transmission control lever
3	THROTTLE LEVER POSITION SENSOR	Throttle lever position sensor
4	VT	Virtual terminal
5	FUSE RELAY BLOCK 2	Fuse relay block 2
--	SIG THROTTLE POS	Signal throttle position
--	SIG UPSHIFT	Signal upshift
--	SIG DOWNSHIFT	Signal downshift
--	SIG ONE TOUCH	Signal one touch
--	SIG PARK BRAKE	Signal park brake
--	SIG SHIFT LVR POSITION	Signal transmission control lever

1.7v and 3.3v schematics

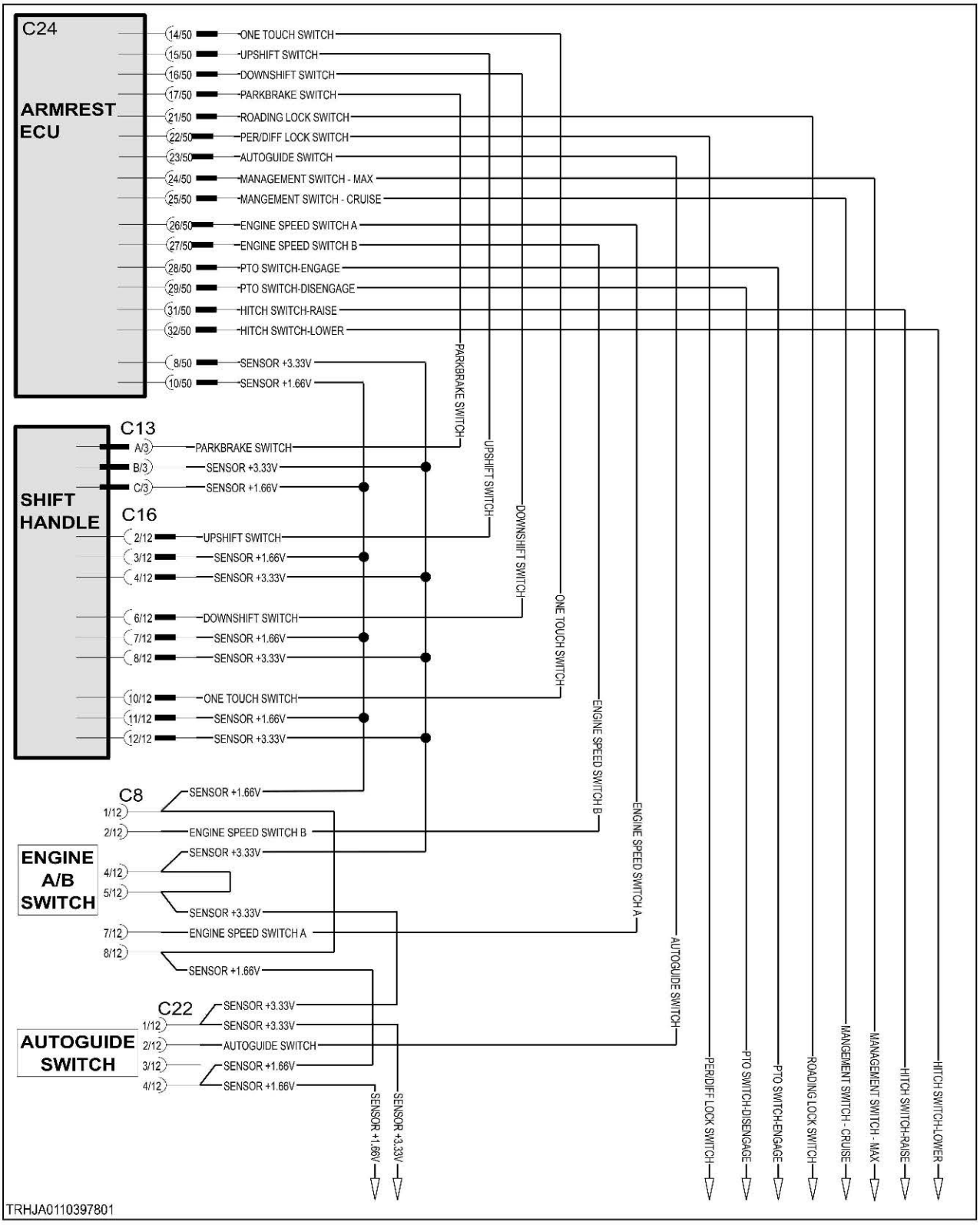

Fig. 487

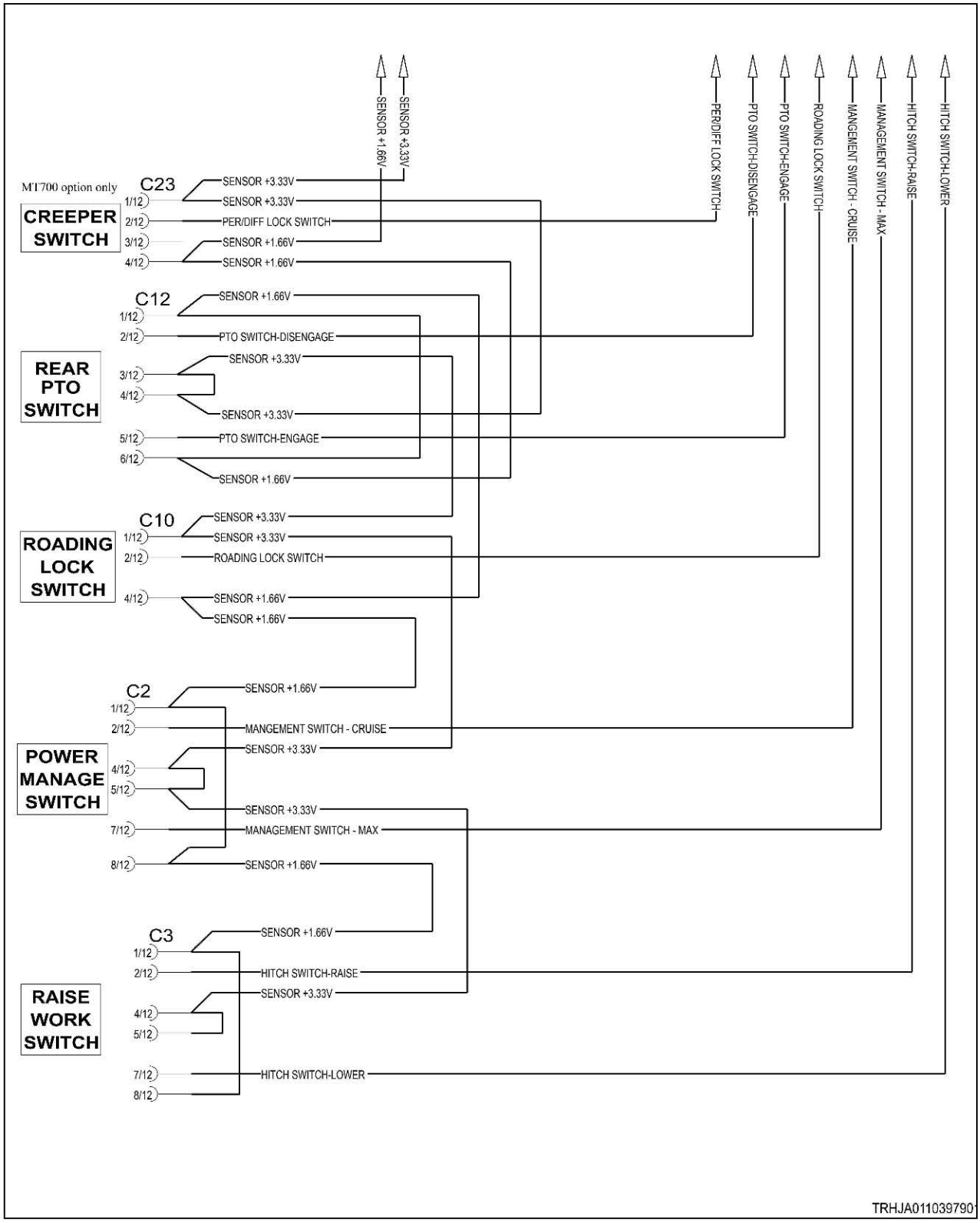
SENSOR +1.66V
SENSOR +3.33V
PER/DIFF LOCK SWITCH
PTO SWITCH-DISENGAGE
PTO SWITCH-ENGAGE
ROADING LOCK SWITCH
MANGEMENT SWITCH - CRUISE
MANAGEMENT SWITCH - MAX
HITCH SWITCH-RAISE
HITCH SWITCH-LOWER
MT700 option only
CREEPER SWITCH
C23
1/12 SENSOR +3.33V
SENSOR +3.33V
2/12 PER/DIFF LOCK SWITCH
3/12 SENSOR +1.66V
4/12 SENSOR +1.66V
C12
1/12 SENSOR +1.66V
2/12 PTO SWITCH-DISENGAGE
REAR PTO SWITCH
3/12 SENSOR +3.33V
4/12
SENSOR +3.33V
5/12 PTO SWITCH-ENGAGE
6/12
SENSOR +1.66V
C10
ROADING LOCK SWITCH
1/12 SENSOR +3.33V
SENSOR +3.33V
2/12 ROADING LOCK SWITCH
4/12 SENSOR +1.66V
SENSOR +1.66V
C2
1/12 SENSOR +1.66V
2/12 MANGEMENT SWITCH - CRUISE
POWER MANAGE SWITCH
SENSOR +3.33V
4/12
5/12
SENSOR +3.33V
7/12 MANAGEMENT SWITCH - MAX
8/12 SENSOR +1.66V
C3
SENSOR +1.66V
1/12
2/12 HITCH SWITCH-RAISE
SENSOR +3.33V
RAISE WORK SWITCH
4/12
5/12
7/12 HITCH SWITCH-LOWER
8/12
TRHJA011039790

Fig. 488

10.7.82.2 Downshift switch



Fig. 489 Switch pinout

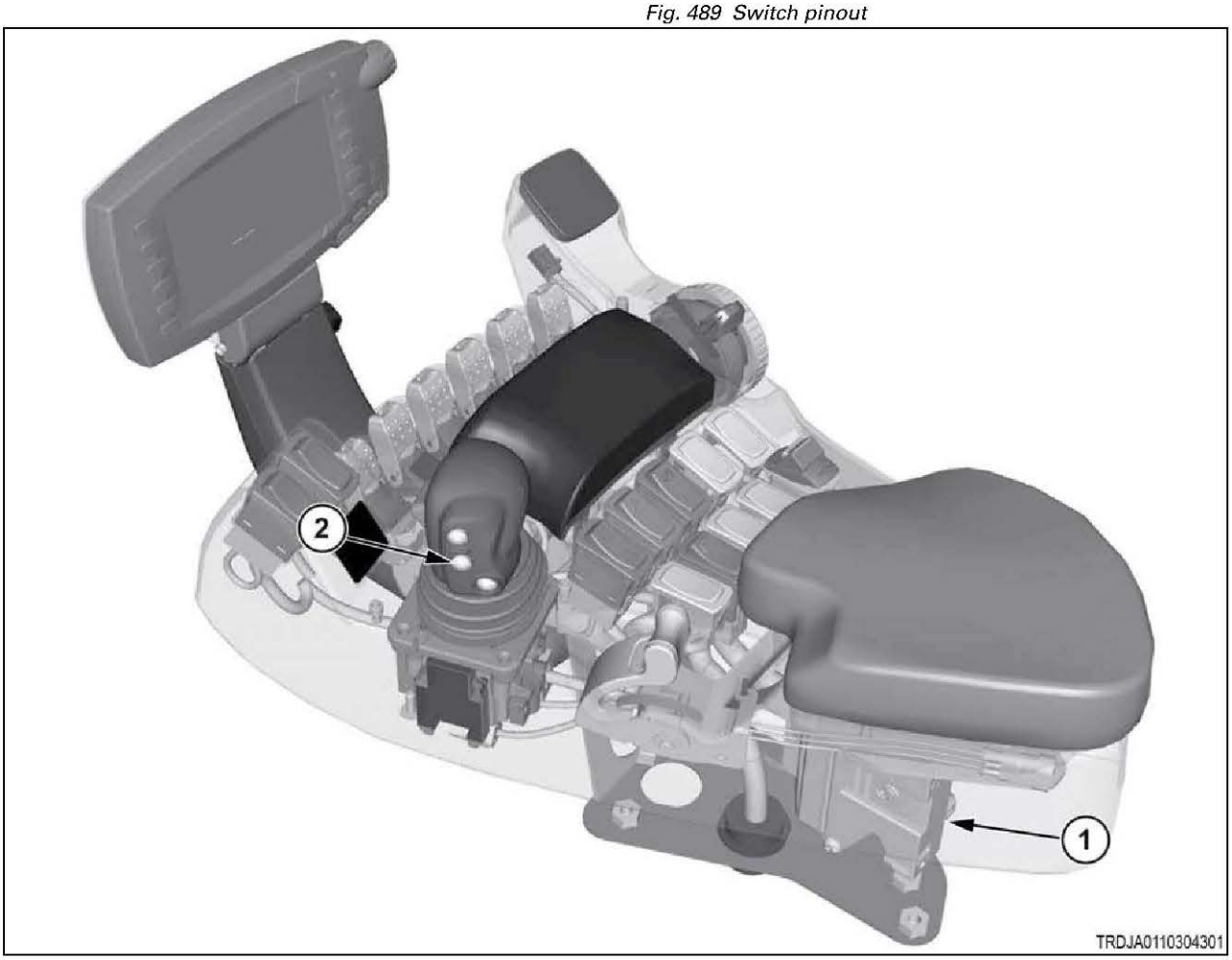

Fig. 490

(1)	Armrest module
(2)	Downshift switch

10.7.83 Code SA 05 SPN 3653 FMI 03

The downshift switch signal is above normal.

The signal voltage is higher than the 3.33-volt supply. The most likely cause is a short circuit to a higher voltage circuit.

The switch is a single-pole, double-throw (SPDT) type switch, except the "common" terminal is the data output instead of a power source. The 2 other contacts are connected to 3.33-volt power and 1.66-volt power. Operating the switch selects one of these voltages for the signal output. This error will likely be accompanied by a power supply error too. This information can be used to isolate the cause.

Diagnosis and solution

1. Determine when this error is reported.

a) Turn the key start switch to the on position.

b) Check for this error code (SA 05 SPN 3653 FMI 03) as you operate the switch between on and off states.

Note that power supply errors will likely also be reported, as noted below.

Result

- The error is reported only when the switch is in the off position.

  Error code SA 05 SPN 3511 FMI 03 (3.33V power) is likely also reported.

  Diagnose the power supply error code first.

  Stop.
- The error is reported only when the switch is in the on position.

  Error code SA 05 SPN 3510 FMI 03 (1.66V power) is likely also reported.

  Diagnose the power supply error code first.

  Stop.
- The error is reported regardless of switch position.

  The signal wire is shorted to some voltage source.

  Repair or replace the harness.

  See step 2 to validate the repair.

2. Check if the fault code remains.

a) Inspect and clean the harness connector contacts.

b) Connect all the connectors.

c) Turn the battery disconnect switch to the on position.

d) Turn the key start switch to the on position.

e) Operate the machine at low idle.

f) Check if the fault code remains.

Result

- SPN 3653 FMI 03 is not active.

  Stop.
- SPN 3653 FMI 03 is active.

  Failure of the armrest module is possible but not common. Exit the procedure and do the procedure again. If the fault code remains active, replace the armrest module.

  Stop.

10.7.83.1 Transmission control lever electrical schematic

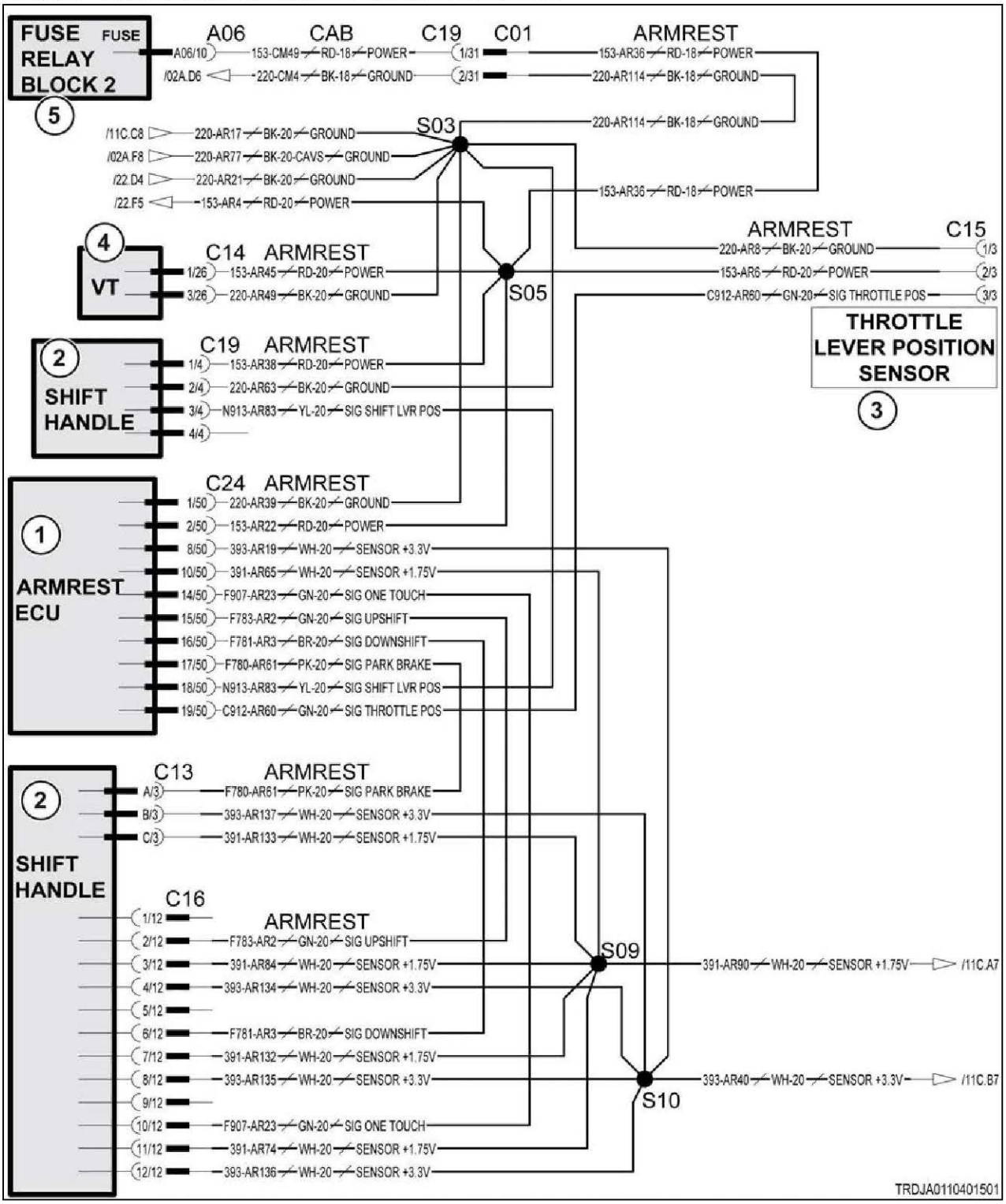

Fig. 491

Schematic legend		
Item	**Schematic term**	**Description**
1	ARMREST ECU	Armrest module
2	SHIFT HANDLE	Transmission control lever
3	THROTTLE LEVER POSITION SENSOR	Throttle lever position sensor
4	VT	Virtual terminal
5	FUSE RELAY BLOCK 2	Fuse relay block 2
--	SIG THROTTLE POS	Signal throttle position
--	SIG UPSHIFT	Signal upshift
--	SIG DOWNSHIFT	Signal downshift
--	SIG ONE TOUCH	Signal one touch
--	SIG PARK BRAKE	Signal park brake
--	SIG SHIFT LVR POSITION	Signal transmission control lever

1.7v and 3.3v schematics

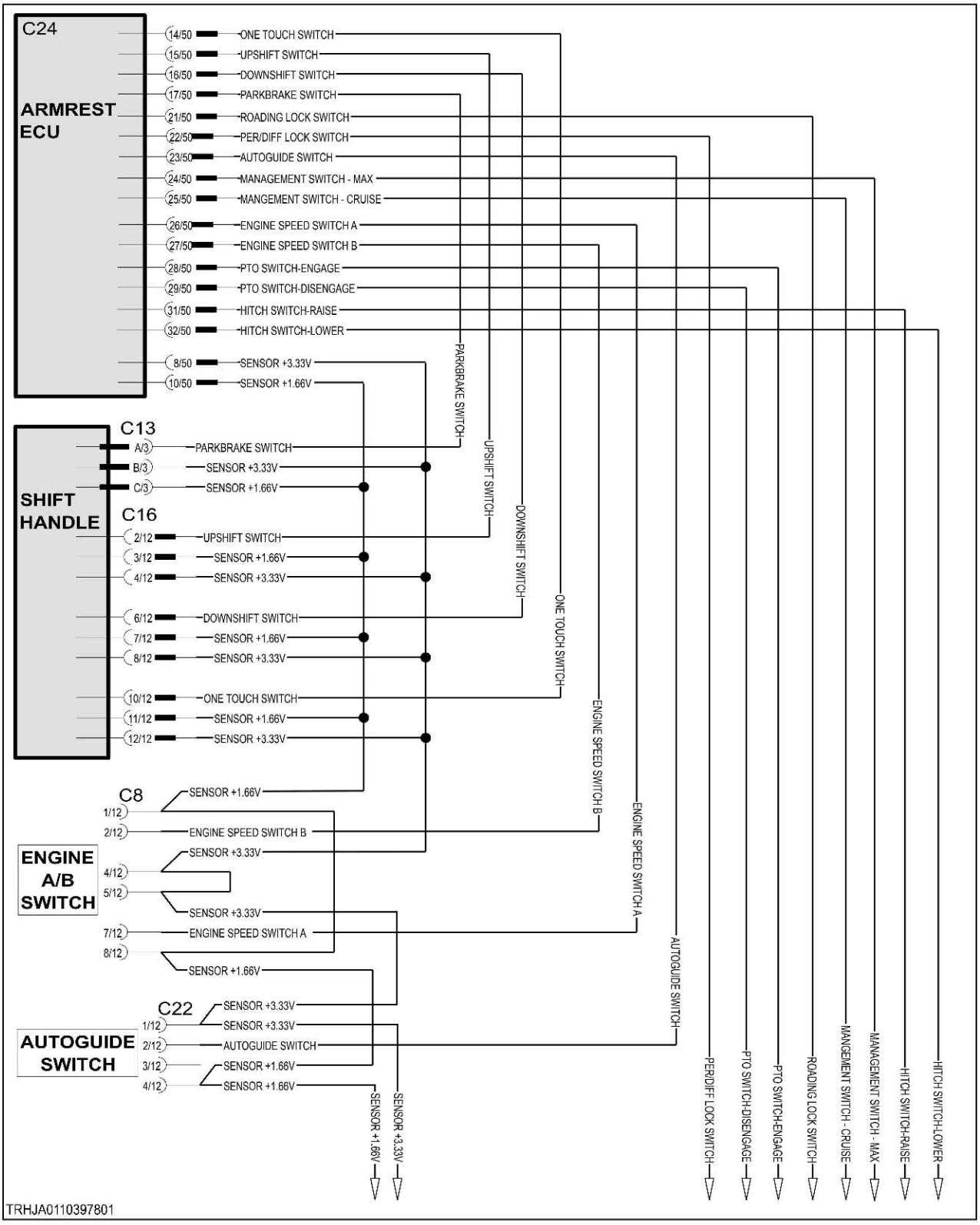

Fig. 492

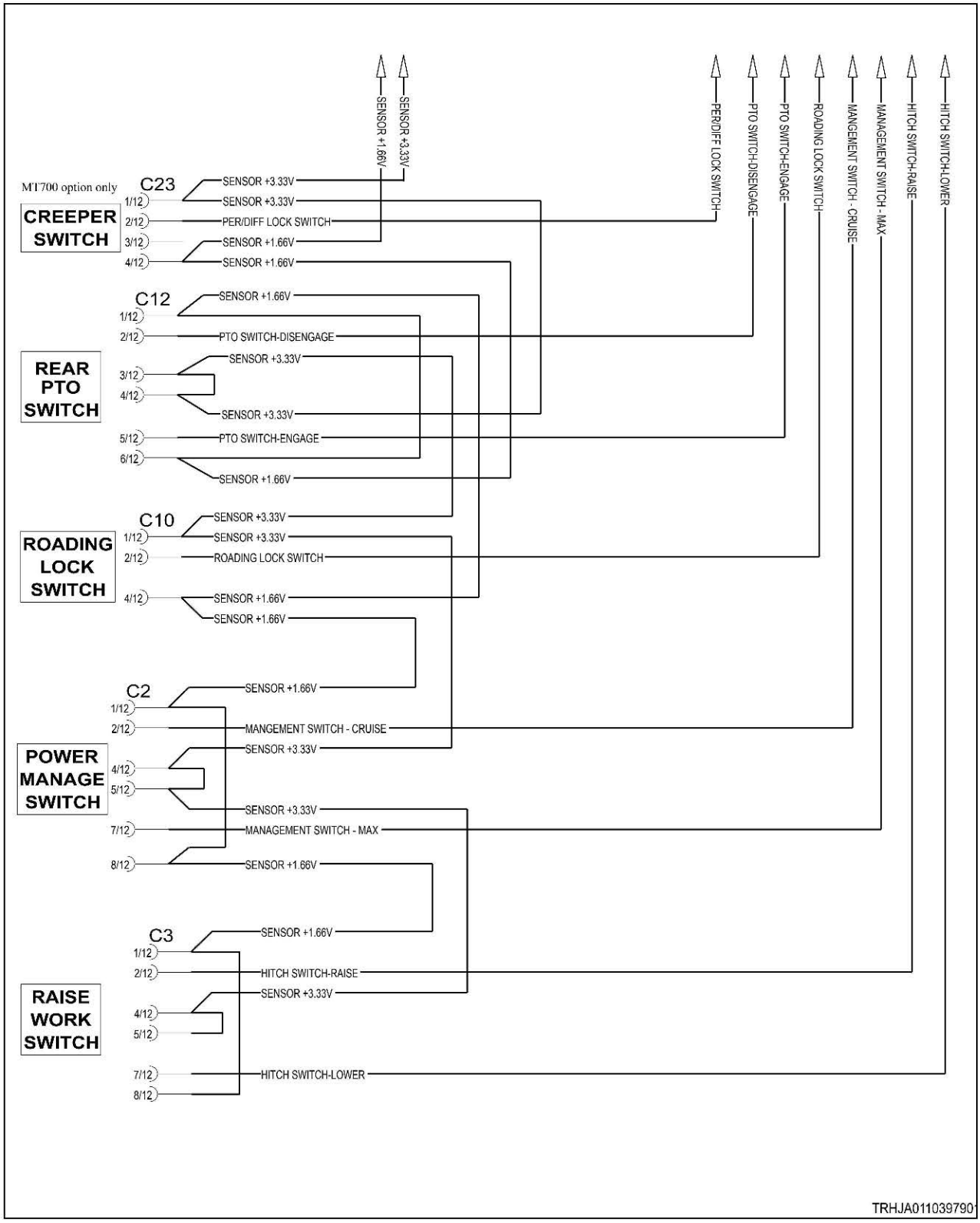
SENSOR +1.66V
SENSOR +3.33V
PER/DIFF LOCK SWITCH
PTO SWITCH-DISENGAGE
PTO SWITCH-ENGAGE
ROADING LOCK SWITCH
MANGEMENT SWITCH - CRUISE
MANAGEMENT SWITCH - MAX
HITCH SWITCH-RAISE
HITCH SWITCH-LOWER
MT700 option only
CREEPER SWITCH
C23
1/12 SENSOR +3.33V
2/12 PER/DIFF LOCK SWITCH
3/12 SENSOR +1.66V
4/12 SENSOR +1.66V
REAR PTO SWITCH
C12
1/12 SENSOR +1.66V
2/12 PTO SWITCH-DISENGAGE
3/12 SENSOR +3.33V
4/12
SENSOR +3.33V
5/12 PTO SWITCH-ENGAGE
6/12
SENSOR +1.66V
ROADING LOCK SWITCH
C10
1/12 SENSOR +3.33V
SENSOR +3.33V
2/12 ROADING LOCK SWITCH
4/12 SENSOR +1.66V
SENSOR +1.66V
POWER MANAGE SWITCH
C2
1/12 SENSOR +1.66V
2/12 MANGEMENT SWITCH - CRUISE
SENSOR +3.33V
4/12
5/12
SENSOR +3.33V
7/12 MANAGEMENT SWITCH - MAX
8/12 SENSOR +1.66V
RAISE WORK SWITCH
C3
1/12 SENSOR +1.66V
2/12 HITCH SWITCH-RAISE
SENSOR +3.33V
4/12
5/12
7/12 HITCH SWITCH-LOWER
8/12
TRHJA011039790

Fig. 493

10.7.83.2 Downshift switch



Fig. 494 Switch pinout

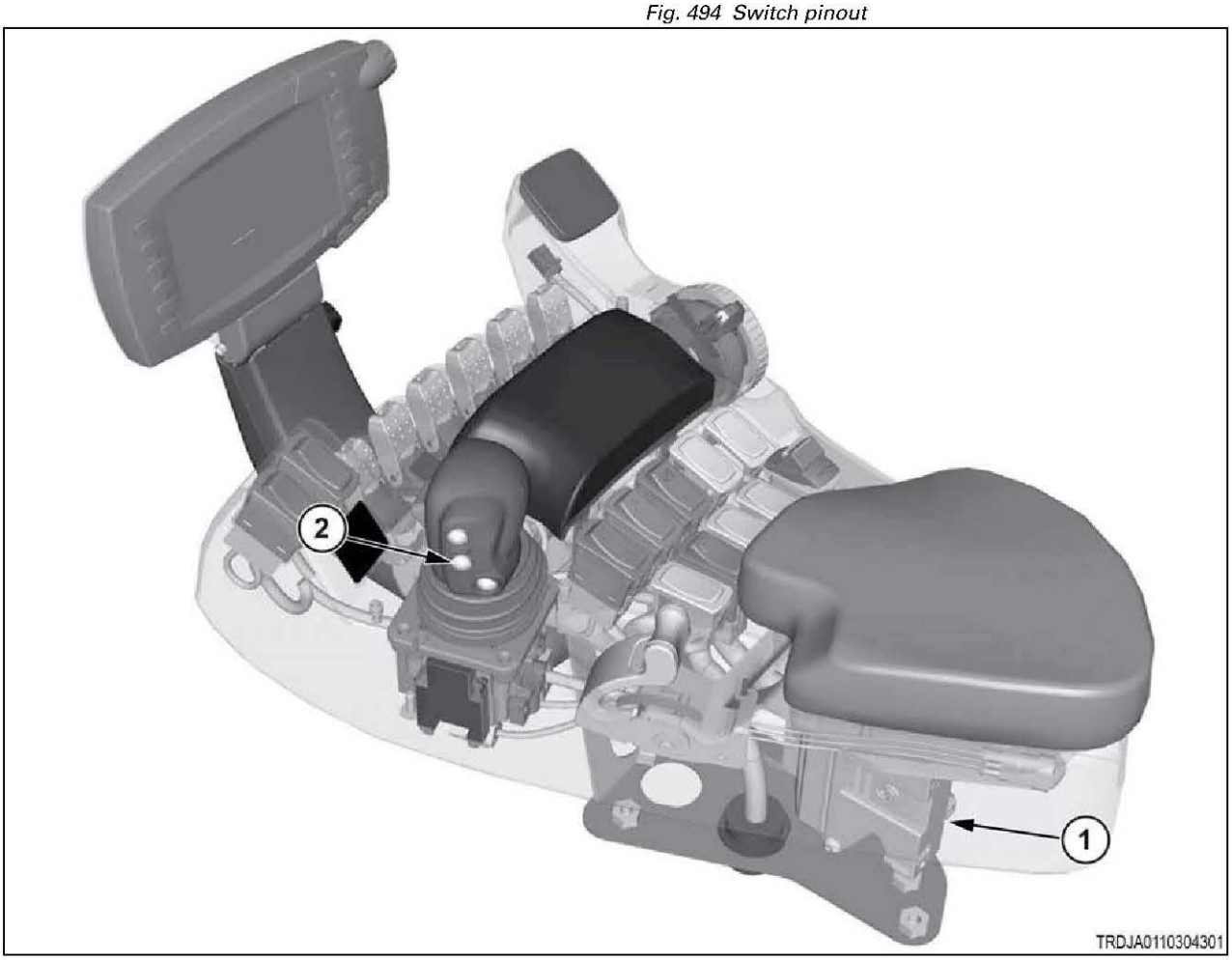

Fig. 495

(1)	Armrest module
(2)	Downshift switch

10.7.84 Code SA 05 SPN 3653 FMI 04

The downshift switch signal is below normal.

The signal voltage is lower than the 1.66-volt supply. The most likely cause is a short circuit to ground.

The switch is a single-pole, double-throw (SPDT) type switch, except the "common" terminal is the data output instead of a power source. The 2 other contacts are connected to 3.33-volt power and 1.66-volt power. Operating the switch selects one of these voltages for the signal output. This error will likely be accompanied by a power supply error too. This information can be used to isolate the cause.

Diagnosis and solution

1. Determine when this error is reported.

a) Turn the key start switch to the on position.

b) Check for this error code (SA 05 SPN 3653 FMI 04) as you operate the switch between on and off states.

Note that power supply errors will likely also be reported, as noted below.

Result

- The error is reported only when the switch is in the off position.

  Error code SA 05 SPN 3511 FMI 04 (3.33V power) is likely also reported.

  Diagnose the power supply error code first.

  Stop.
- The error is reported only when the switch is in the on position.

  Error code SA 05 SPN 3510 FMI 04 (1.66V power) is likely also reported.

  Diagnose the power supply error code first.

  Stop.
- The error is reported regardless of switch position.

  The signal wire is shorted to ground.

  Repair or replace the harness.

  See step 2 to validate the repair.

2. Check if the fault code remains.

a) Inspect and clean the harness connector contacts.

b) Connect all the connectors.

c) Turn the battery disconnect switch to the on position.

d) Turn the key start switch to the on position.

e) Operate the machine at low idle.

f) Check if the fault code remains.

Result

- SPN 3653 FMI 04 is not active.

  Stop.
- SPN 3653 FMI 04 is active.

  Failure of the armrest module is possible but not common. Exit the procedure and do the procedure again. If the fault code remains active, replace the armrest module.

  Stop.

10.7.84.1 Transmission control lever electrical schematic

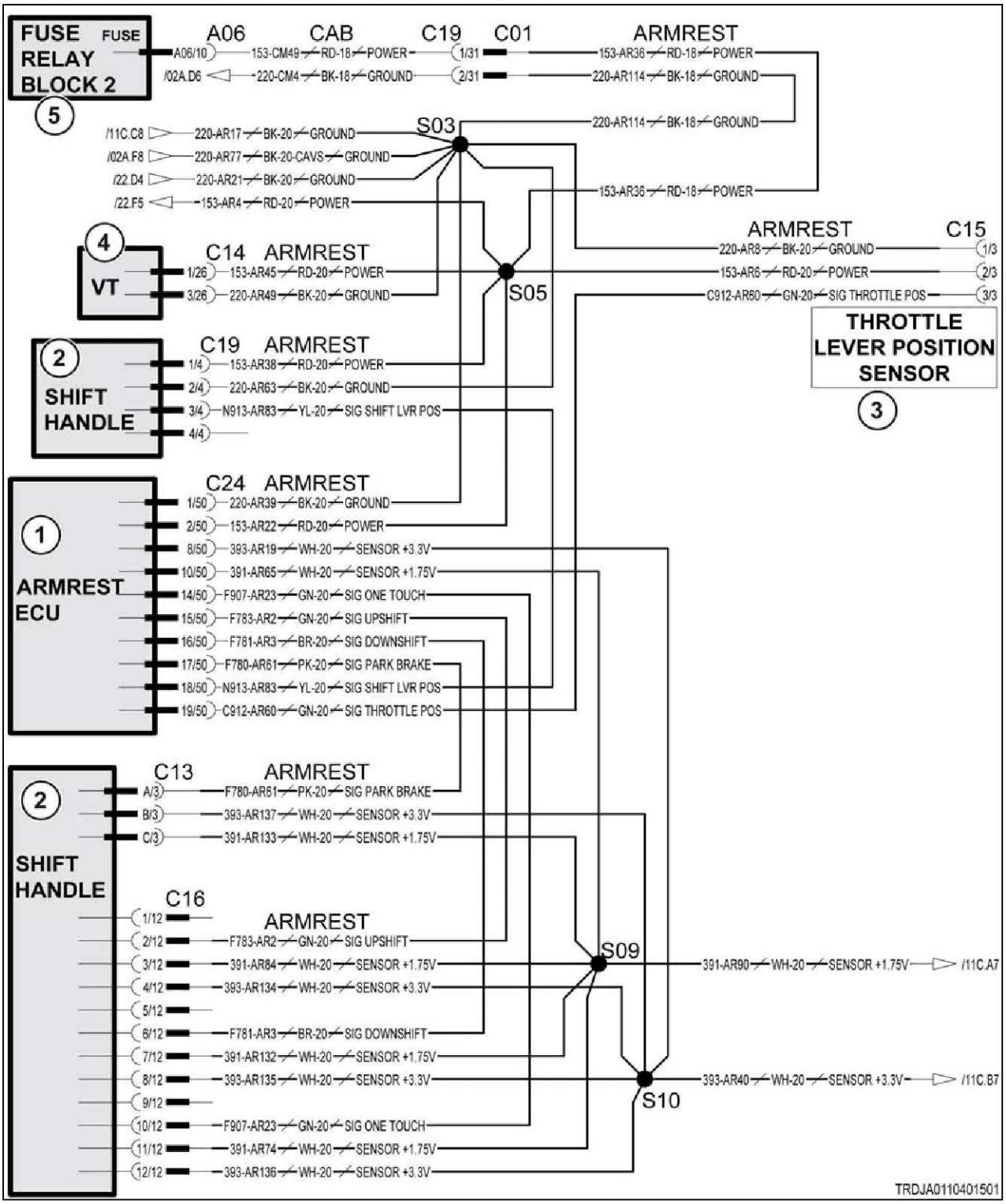

Fig. 496

Schematic legend		
Item	**Schematic term**	**Description**
1	ARMREST ECU	Armrest module
2	SHIFT HANDLE	Transmission control lever
3	THROTTLE LEVER POSITION SENSOR	Throttle lever position sensor
4	VT	Virtual terminal
5	FUSE RELAY BLOCK 2	Fuse relay block 2
--	SIG THROTTLE POS	Signal throttle position
--	SIG UPSHIFT	Signal upshift
--	SIG DOWNSHIFT	Signal downshift
--	SIG ONE TOUCH	Signal one touch
--	SIG PARK BRAKE	Signal park brake
--	SIG SHIFT LVR POSITION	Signal transmission control lever

1.7v and 3.3v schematics

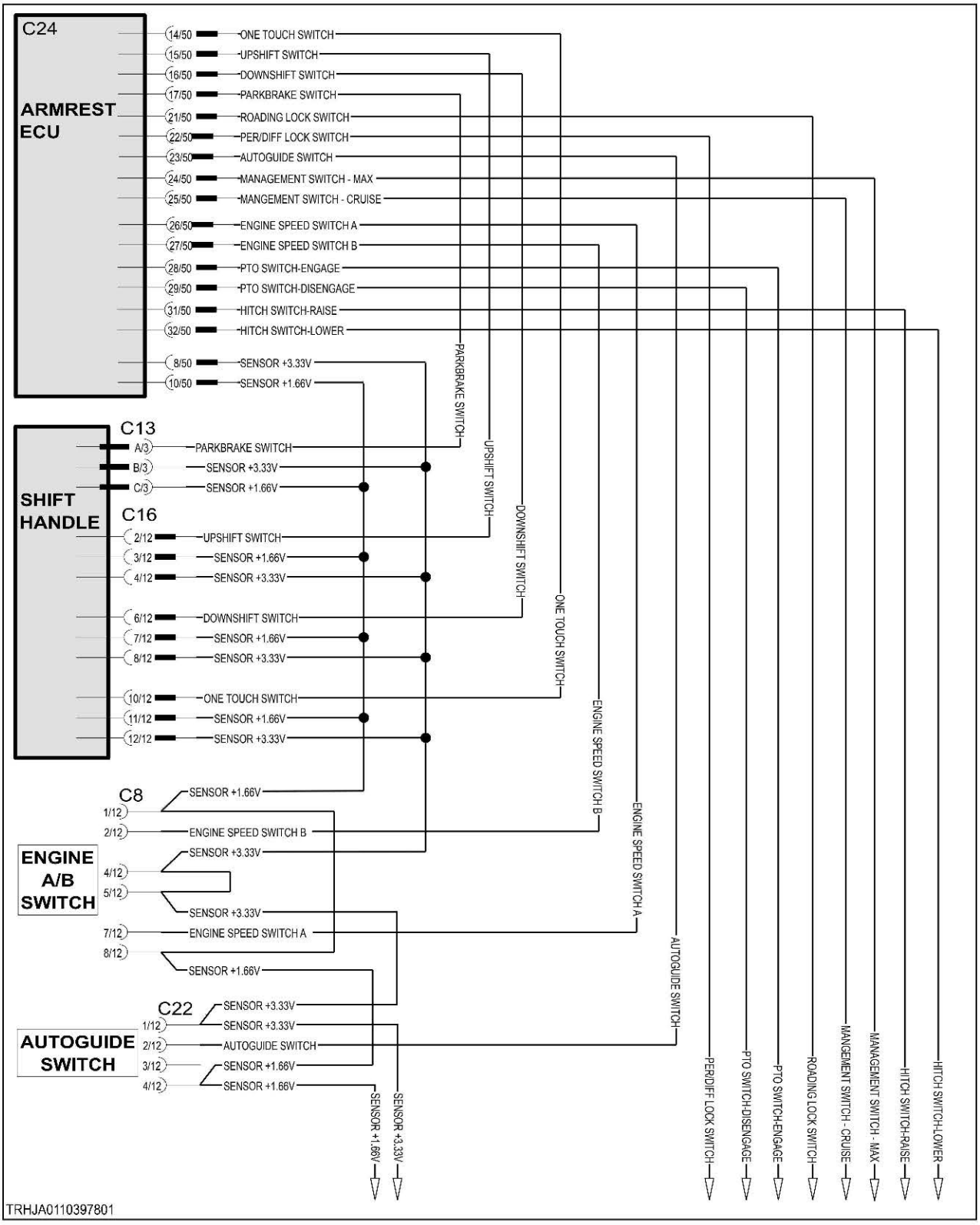

Fig. 497

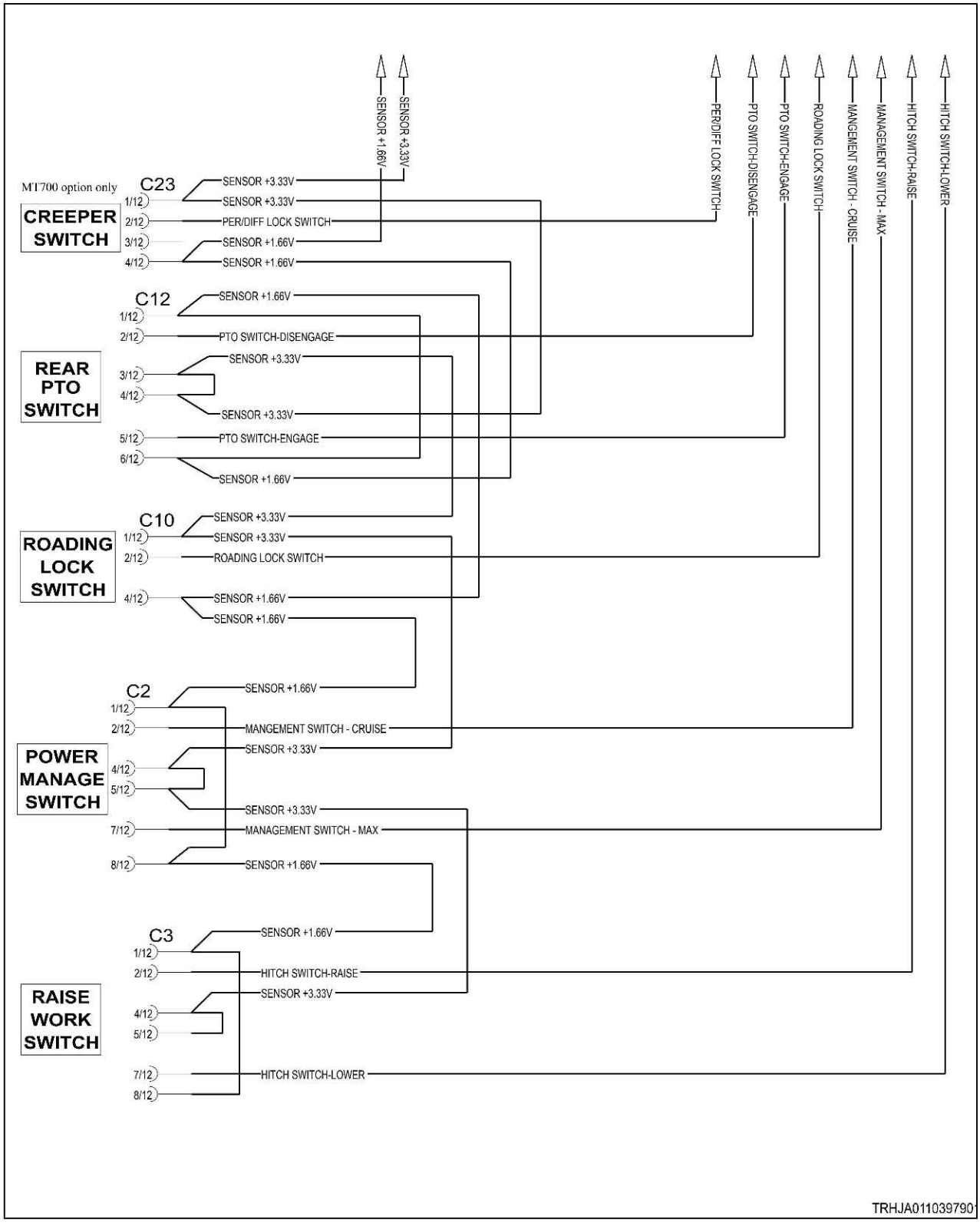
SENSOR +1.66V
SENSOR +3.33V
PER/DIFF LOCK SWITCH
PTO SWITCH-DISENGAGE
PTO SWITCH-ENGAGE
ROADING LOCK SWITCH
MANGEMENT SWITCH - CRUISE
MANAGEMENT SWITCH - MAX
HITCH SWITCH-RAISE
HITCH SWITCH-LOWER
MT700 option only
CREEPER SWITCH
C23
1/12 SENSOR +3.33V
SENSOR +3.33V
2/12 PER/DIFF LOCK SWITCH
3/12 SENSOR +1.66V
4/12 SENSOR +1.66V
C12
1/12 SENSOR +1.66V
2/12 PTO SWITCH-DISENGAGE
REAR PTO SWITCH
3/12 SENSOR +3.33V
4/12
SENSOR +3.33V
5/12 PTO SWITCH-ENGAGE
6/12
SENSOR +1.66V
C10
ROADING LOCK SWITCH
1/12 SENSOR +3.33V
SENSOR +3.33V
2/12 ROADING LOCK SWITCH
4/12 SENSOR +1.66V
SENSOR +1.66V
C2
1/12 SENSOR +1.66V
2/12 MANGEMENT SWITCH - CRUISE
POWER MANAGE SWITCH
SENSOR +3.33V
4/12
5/12
SENSOR +3.33V
7/12 MANAGEMENT SWITCH - MAX
8/12 SENSOR +1.66V
C3
SENSOR +1.66V
1/12
2/12 HITCH SWITCH-RAISE
SENSOR +3.33V
RAISE WORK SWITCH
4/12
5/12
7/12 HITCH SWITCH-LOWER
8/12
TRHJA011039790

Fig. 498

10.7.84.2 Downshift switch



Fig. 499 Switch pinout

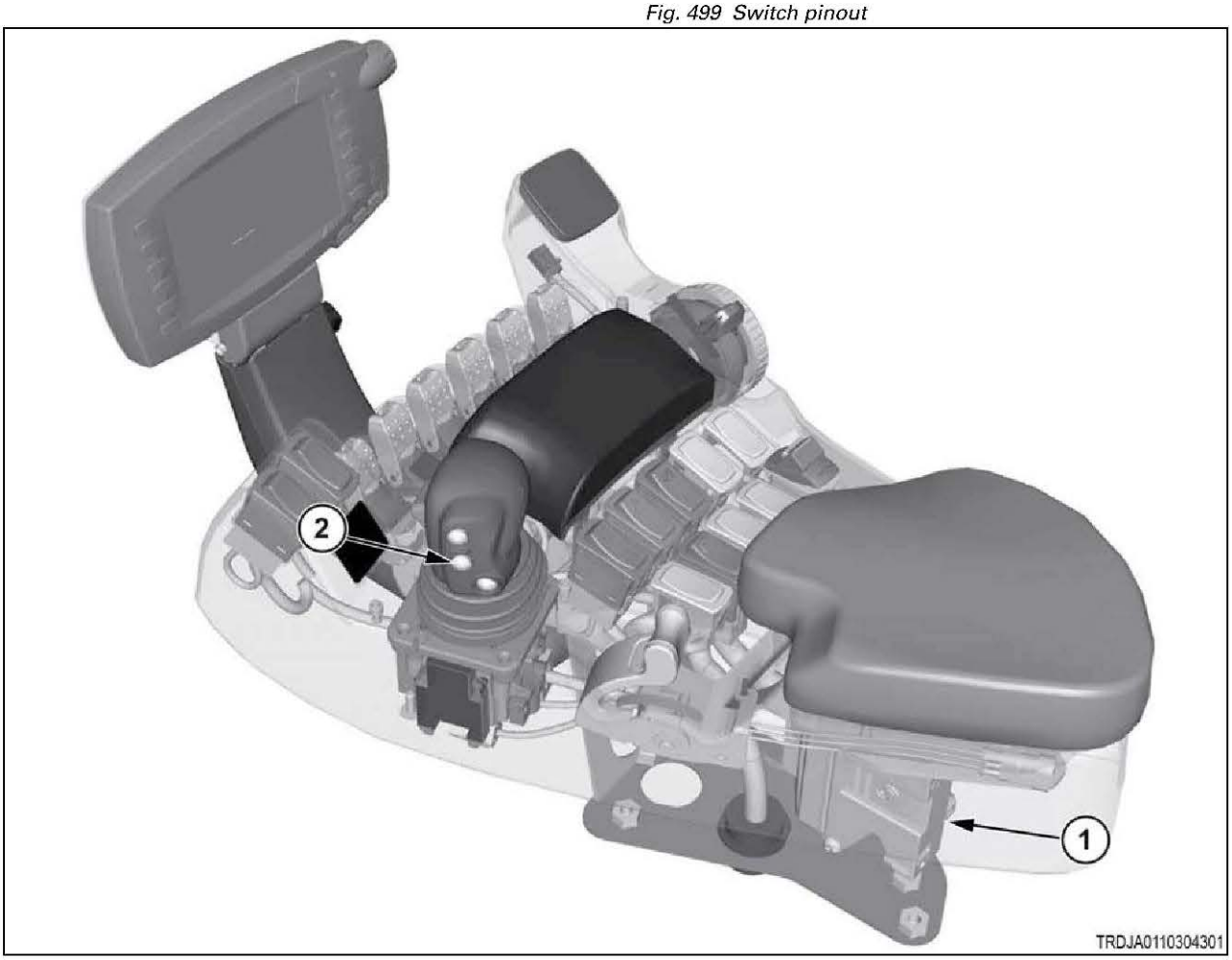

Fig. 500

(1)	Armrest module
(2)	Downshift switch

10.7.85 Code SA 05 SPN 3653 FMI 05

Open circuit in the transmission control lever, downshift switch circuit.

The switch is a single-pole, double-throw (SPDT) type switch, except the "common" terminal is the data output instead of a power source. The 2 other contacts are connected to 3.33-volt power and 1.66-volt power. Operating the switch selects one of these voltages for the signal output. These 2 power circuits are shared by several other function switches on the armrest. This knowledge can aid in diagnosing the fault.

Diagnosis and solution

1. Determine when this error is reported.

a) Turn the key start switch to the on position.

b) Check whether the error code is reported as you operate the switch between on and off states.

Result

- The error is reported only when the switch is in the off position.

  The open circuit is in the 3.33V power circuit.

  See step 2 to isolate the location.
- The error is reported only when the switch is in the on position.

  The open circuit is in the 1.66V power circuit.

  See step 2 to isolate the location.
- The error is reported regardless of switch position.

  The open circuit is in the signal circuit.

  Repair or replace the armrest harness.

  See step 3 to validate the repair.

2. Isolate the power circuit open circuit.

a) Operate all other shift lever switches, and at least one downstream armrest switches, according to the list below, from their off to on positions.

Electrical sequence of switches, starting from the armrest module.

1. Shift Handle (3 pushbuttons)
2. Engine A/B switch
3. Autoguide switch
4. Creeper switch
5. Rear PTO
6. Roading Lock switch
7. Power management (cruise/full) switch
8. Hitch Raise/Work switch

b) Observe which other switches (if any) exhibit similar open circuit error codes.

Result

- At least one upstream switch reported a similar error.

  The open circuit lies at, or just upstream from, that switch.

  Repair or replace the armrest harness.

  See step 3 to validate the repair.

- Only downstream switches reported similar errors.

  The harness is open circuited at this switch location.

  Repair or replace the harness.

  See step 3 to validate the repair.
- No other switches reported similar errors.

  The switch is at fault.

  Replace the switch.

  See step 3 to validate the repair.

3. Check if the fault code remains.

a) Inspect and clean the harness connector contacts.
b) Connect all the connectors.
c) Turn the battery disconnect switch to the on position.
d) Turn the key start switch to the on position.
e) Operate the machine at low idle.
f) Check if the fault code remains.

Result

- SPN 3653 FMI 05 is not active.

  Stop.
- SPN 3653 FMI 05 is active.

  Failure of the armrest module is possible but not common. Exit the procedure and do the procedure again. If the fault code remains active, replace the armrest module.

  Stop.

10.7.85.1 Transmission control lever electrical schematic

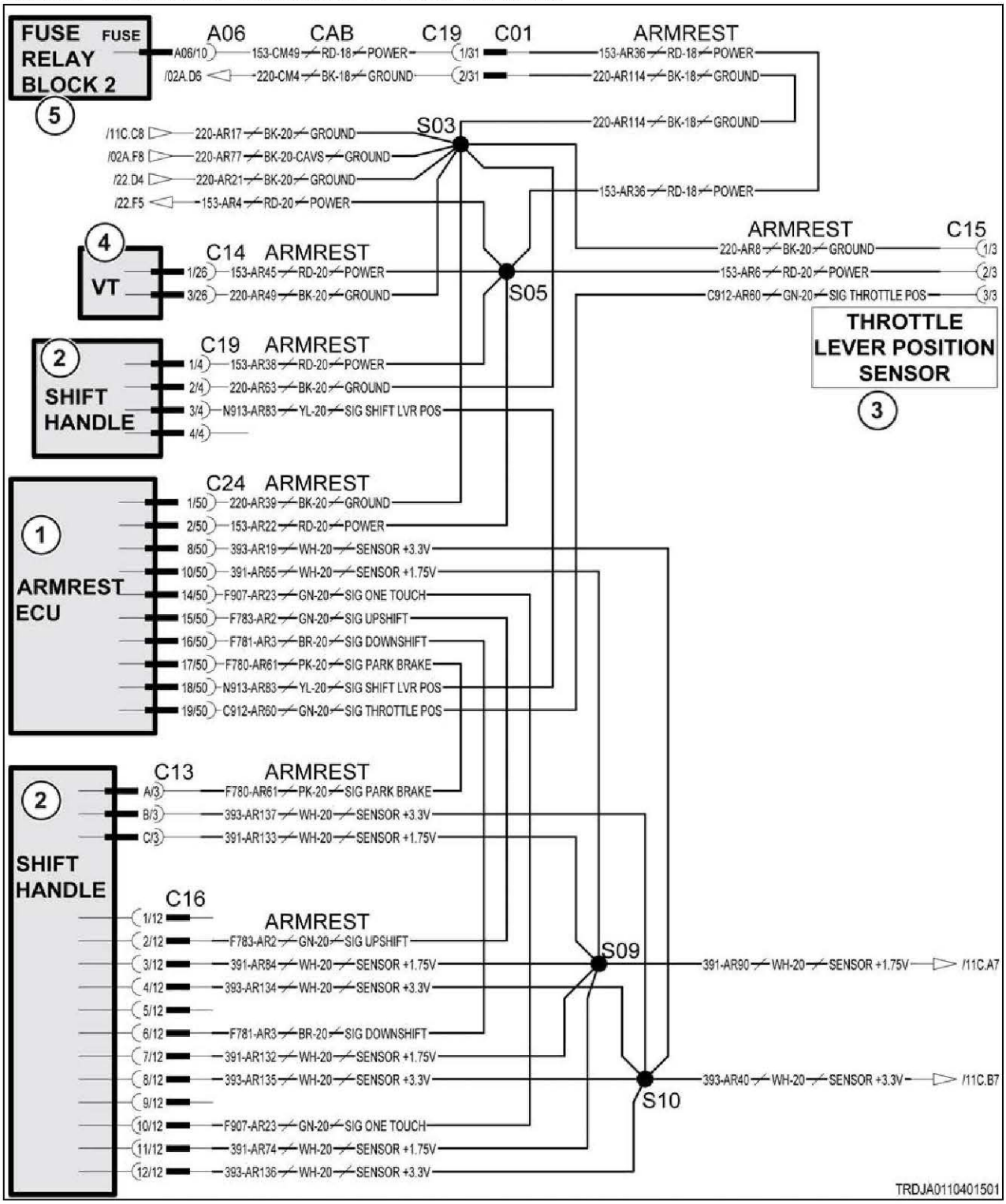

Fig. 501

Schematic legend		
Item	**Schematic term**	**Description**
1	ARMREST ECU	Armrest module
2	SHIFT HANDLE	Transmission control lever
3	THROTTLE LEVER POSITION SENSOR	Throttle lever position sensor
4	VT	Virtual terminal
5	FUSE RELAY BLOCK 2	Fuse relay block 2
--	SIG THROTTLE POS	Signal throttle position
--	SIG UPSHIFT	Signal upshift
--	SIG DOWNSHIFT	Signal downshift
--	SIG ONE TOUCH	Signal one touch
--	SIG PARK BRAKE	Signal park brake
--	SIG SHIFT LVR POSITION	Signal transmission control lever

1.7v and 3.3v schematics

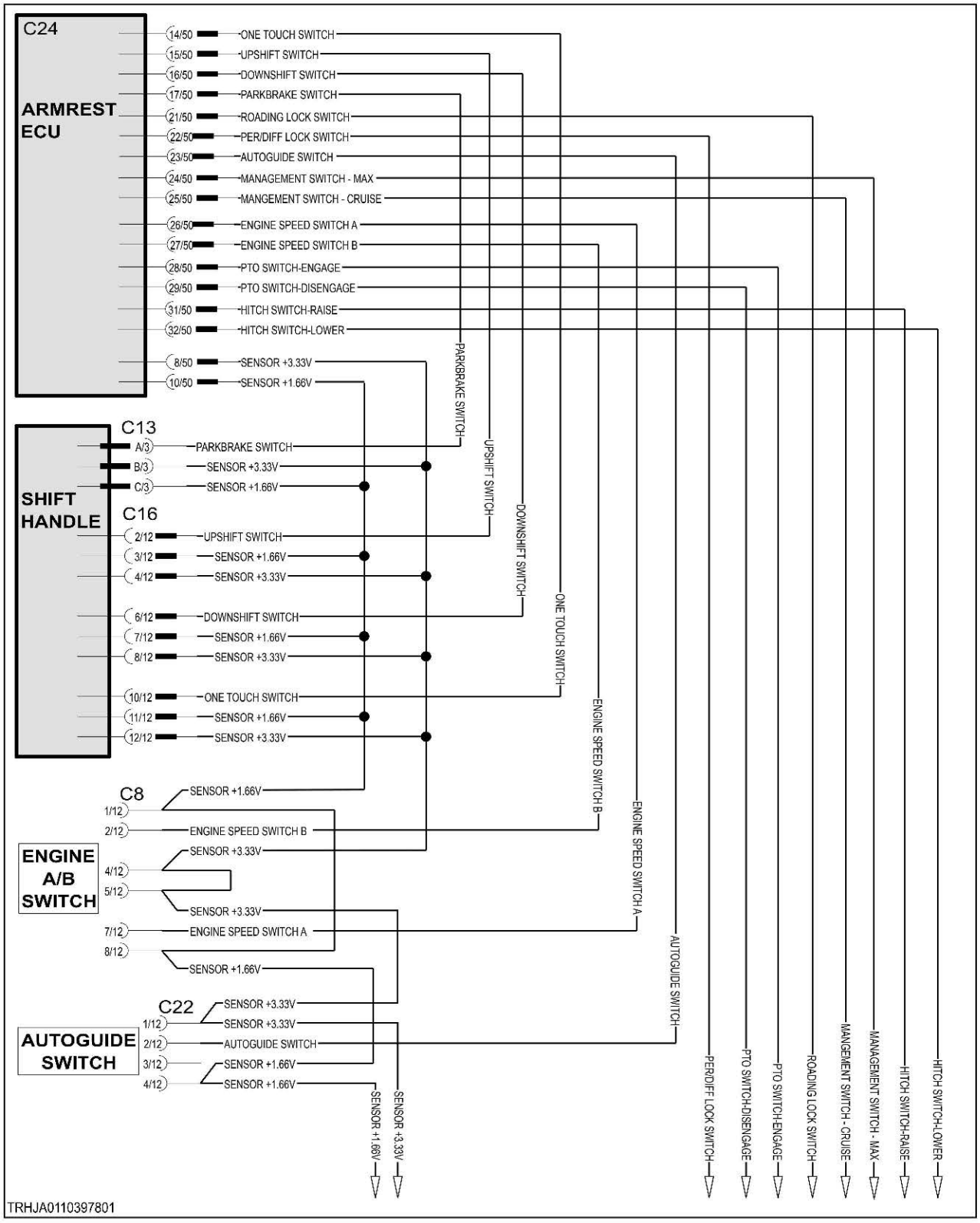

Fig. 502

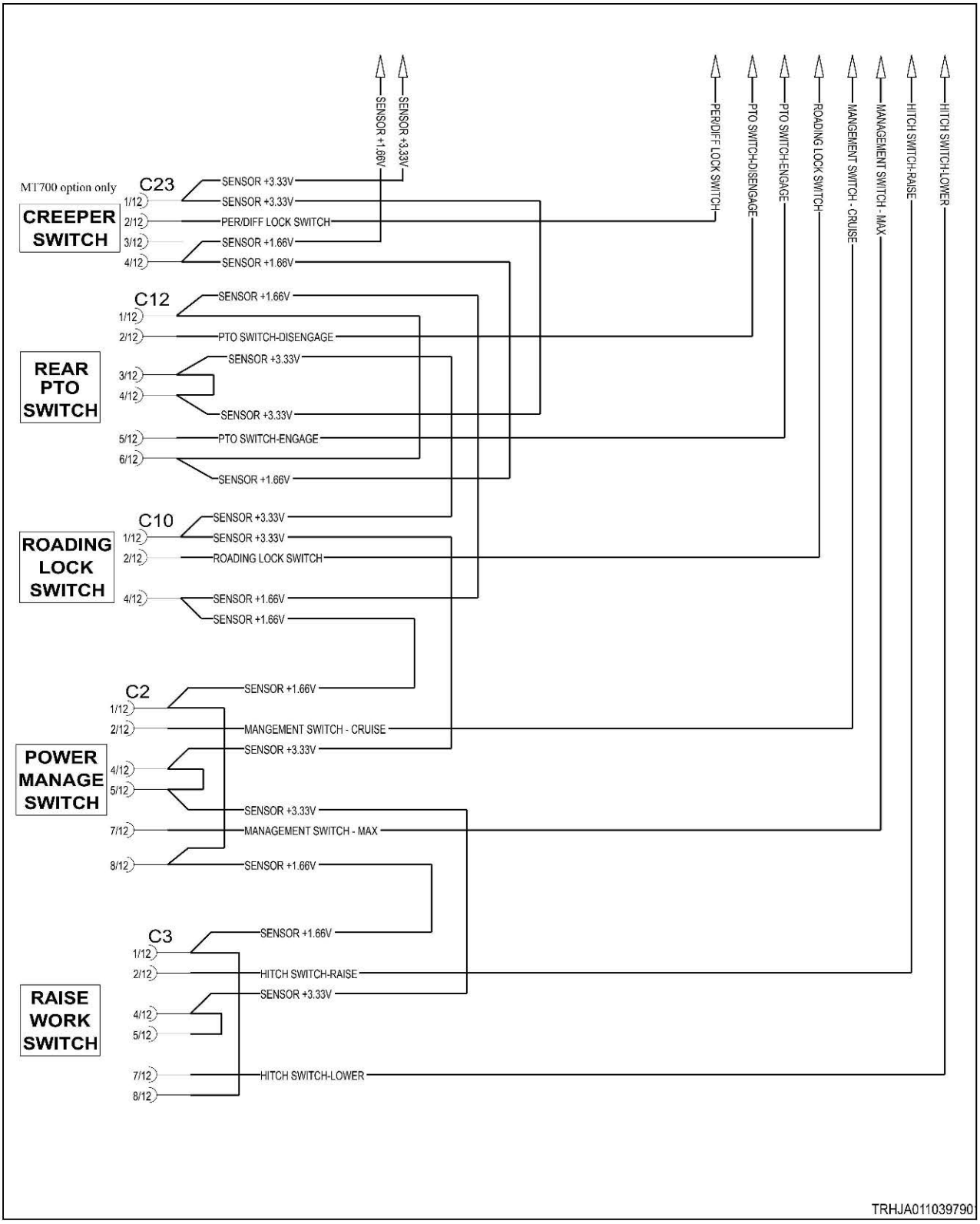
SENSOR +1.66V
SENSOR +3.33V
PER/DIFF LOCK SWITCH
PTO SWITCH-DISENGAGE
PTO SWITCH-ENGAGE
ROADING LOCK SWITCH
MANGEMENT SWITCH - CRUISE
MANAGEMENT SWITCH - MAX
HITCH SWITCH-RAISE
HITCH SWITCH-LOWER
MT700 option only
CREEPER SWITCH
C23
1/12 SENSOR +3.33V
2/12 SENSOR +3.33V
3/12 PER/DIFF LOCK SWITCH
4/12 SENSOR +1.66V
SENSOR +1.66V
REAR PTO SWITCH
C12
1/12 SENSOR +1.66V
2/12 PTO SWITCH-DISENGAGE
3/12 SENSOR +3.33V
4/12
SENSOR +3.33V
5/12 PTO SWITCH-ENGAGE
6/12
SENSOR +1.66V
ROADING LOCK SWITCH
C10
1/12 SENSOR +3.33V
SENSOR +3.33V
2/12 ROADING LOCK SWITCH
4/12 SENSOR +1.66V
SENSOR +1.66V
POWER MANAGE SWITCH
C2
1/12 SENSOR +1.66V
2/12 MANGEMENT SWITCH - CRUISE
SENSOR +3.33V
4/12
5/12
SENSOR +3.33V
7/12 MANAGEMENT SWITCH - MAX
8/12 SENSOR +1.66V
RAISE WORK SWITCH
C3
1/12 SENSOR +1.66V
2/12 HITCH SWITCH-RAISE
SENSOR +3.33V
4/12
5/12
7/12 HITCH SWITCH-LOWER
8/12
TRHJA011039790

Fig. 503

10.7.85.2 Downshift switch



Fig. 504 Switch pinout

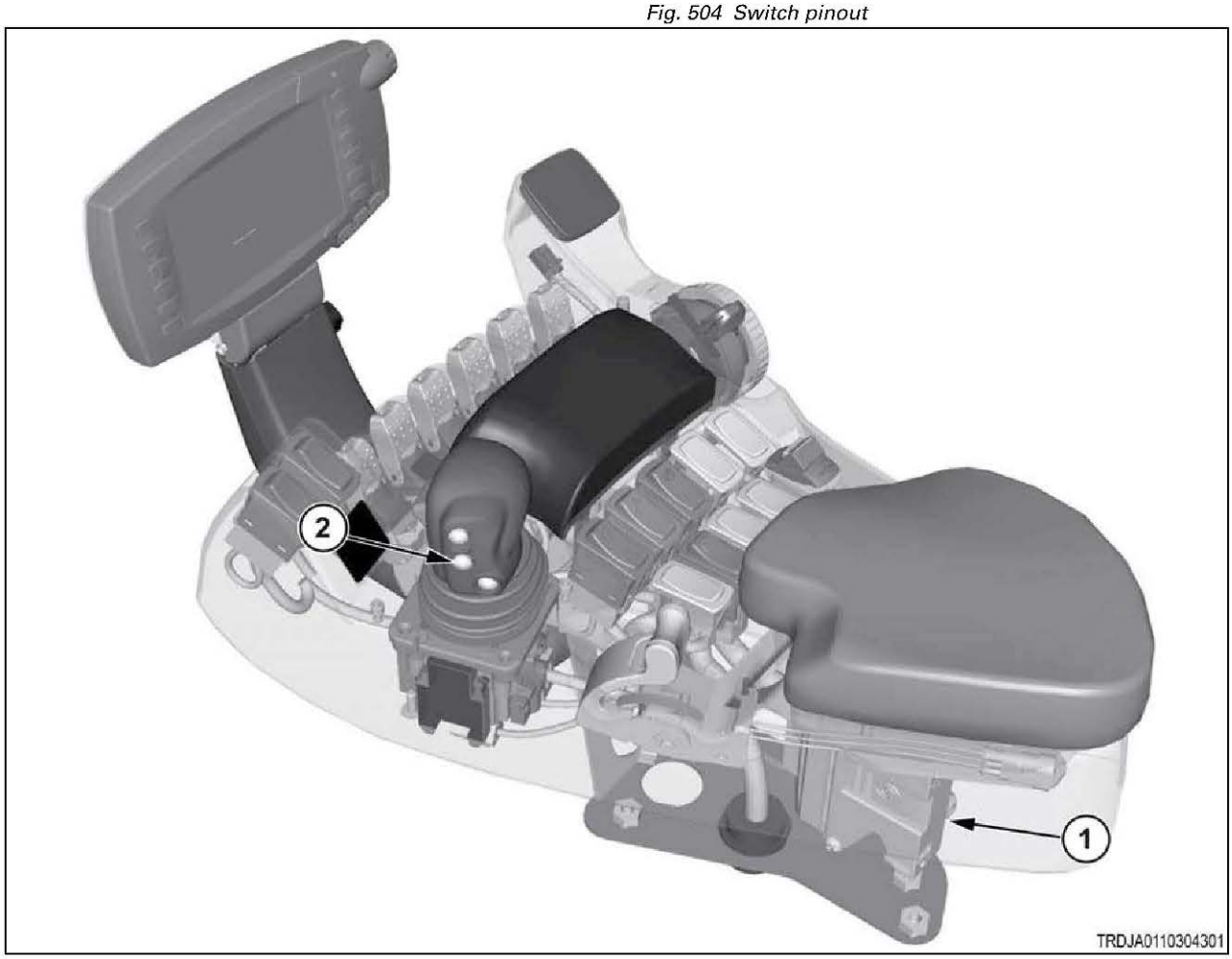

Fig. 505

(1)	Armrest module
(2)	Downshift switch

10.7.86 Code SA 05 SPN 520193 FMI 02

The one touch switch signal is erratic, intermittent, or incorrect.

The switch is a single-pole, double-throw (SPDT) type switch, except the "common" terminal is the data output instead of a power source. The 2 other contacts are connected to 3.33-volt power and 1.66-volt power. Operating the switch selects one of these voltages for the signal output. These 2 power circuits are shared by several other function switches on the armrest. This knowledge can aid in diagnosing the fault.

Diagnosis and solution

1. Check the function of downstream switches that share power circuits.

This will help isolate whether the problem is in the power or signal circuit.

a) Turn the key start switch to the on position.
b) Operate the engine A/B speed switch in both directions.
c) Check for additional error codes.

Result

- SA 05 SPN 2970 FMI 02 or SA 05 SPN 2971 FMI 02 (engine speed) errors are reported.

  Focus further examination on the power circuits between the transmission control lever and the armrest controller.

  See step 2 to check for loose connections.
- No additional error codes are reported.

  The power circuits are not suspect.

  Focus further examination on the switch signal output.

  See step 2 to check for loose connections.

2. Inspect all harness and switch connections.

a) Turn the key start switch to the off position.
b) Turn the battery disconnect switch to the off position.
c) Open the top of the armrest console.
d) Inspect and clean all connectors and connector contacts:

- Look for bent or worn pins.
- Look for deformed or oversized sockets.
- Look for corrosion on the pins and sockets. Corrosion is a sign of a loose connection.
- Look for signs of overheating. Overheating is a sign of a poor connection, and can further loosen the pin or socket mount. The whole connector body should be replaced.

e) Make sure to inspect the circuits identified in step 1 as they pass through the following connector locations:

- Switch signal at the armrest ECU C24-14.
- All contacts at the one touch switch.
- The 1.66V and 3.33V power signals at the Armrest ECU C24-8 (3.33V) and C24-10 (1.66V)

f) Repair or replace any connector or harness found faulty.

Result

- No faulty contacts were found.

  See step 3 to check the switch function.
- Faulty contacts were found and repaired.

  See step 4 to validate the repair.

3. Check the switch function.

a) Disconnect the one touch switch.

b) Check resistance between contacts 10 & 11 and 10 & 12, as you operate the switch from on and off.

- In the on-position, contacts 10 and 11 should have continuity.
- In the off-position, contacts 10 and 12 should have continuity.

Result

- Continuity checks are correct.

  See step 4 to check if the error persists.
- Continuity checks are incorrect.

  Replace the switch.

  See step 4 to validate the repair.

4. Check if the fault code remains.

a) Inspect and clean the harness connector contacts.
b) Connect all the connectors.
c) Turn the battery disconnect switch to the on position.
d) Turn the key start switch to the on position.
e) Operate the machine at low idle.
f) Check if the fault code remains.

Result

- SPN 250193 FMI 02 is not active.

  Stop.
- SPN 520193 FMI 02 is active.

  Failure of the armrest module is possible but not common. Exit the procedure and do the procedure again. If the fault code remains active, replace the armrest module.

  Stop.

10.7.86.1 Transmission control lever electrical schematic

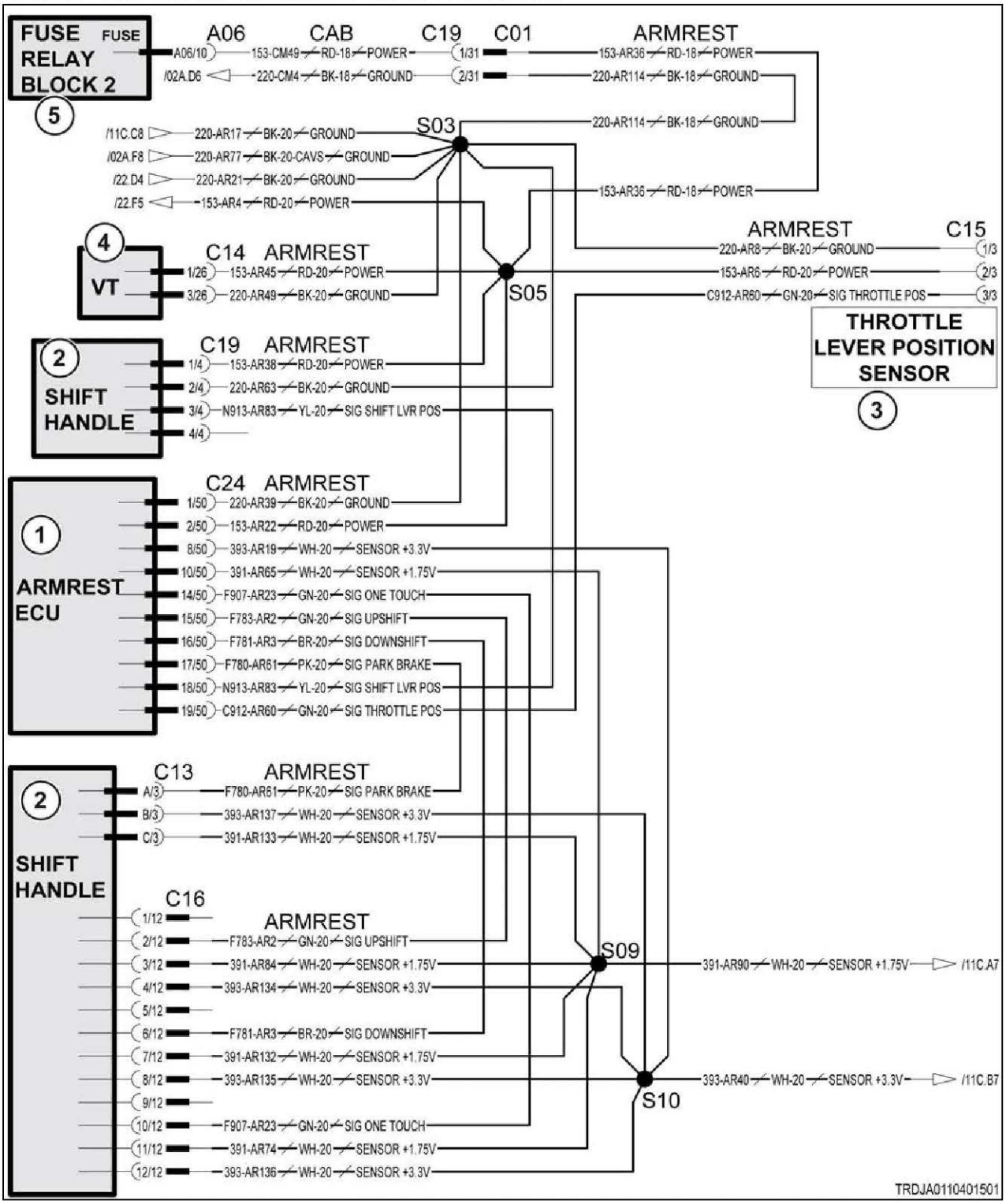

Fig. 506

Schematic legend		
Item	**Schematic term**	**Description**
1	ARMREST ECU	Armrest module
2	SHIFT HANDLE	Transmission control lever
3	THROTTLE LEVER POSITION SENSOR	Throttle lever position sensor
4	VT	Virtual terminal
5	FUSE RELAY BLOCK 2	Fuse relay block 2
--	SIG THROTTLE POS	Signal throttle position
--	SIG UPSHIFT	Signal upshift
--	SIG DOWNSHIFT	Signal downshift
--	SIG ONE TOUCH	Signal one touch
--	SIG PARK BRAKE	Signal park brake
--	SIG SHIFT LVR POSITION	Signal transmission control lever

1.7v and 3.3v schematics

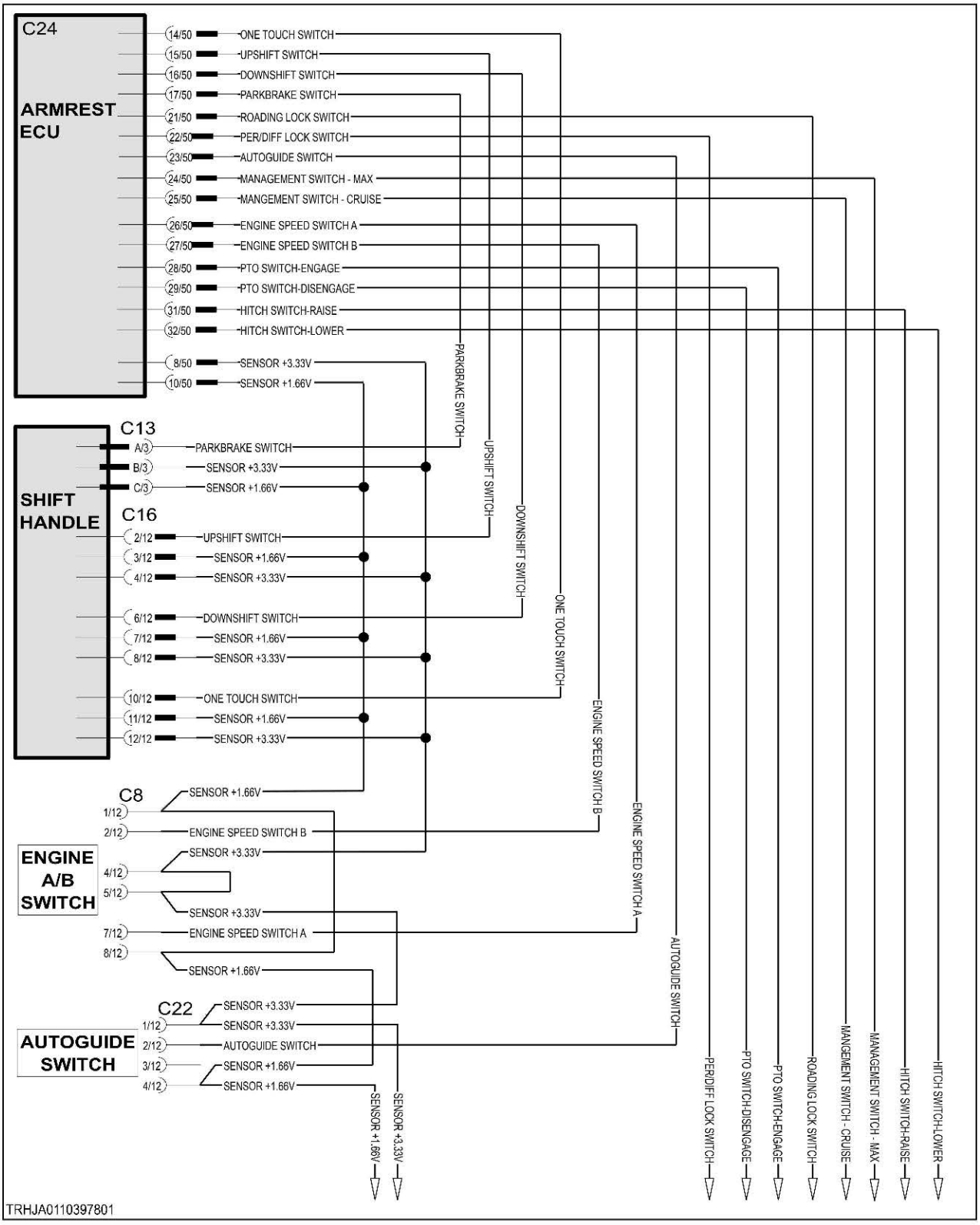

Fig. 507

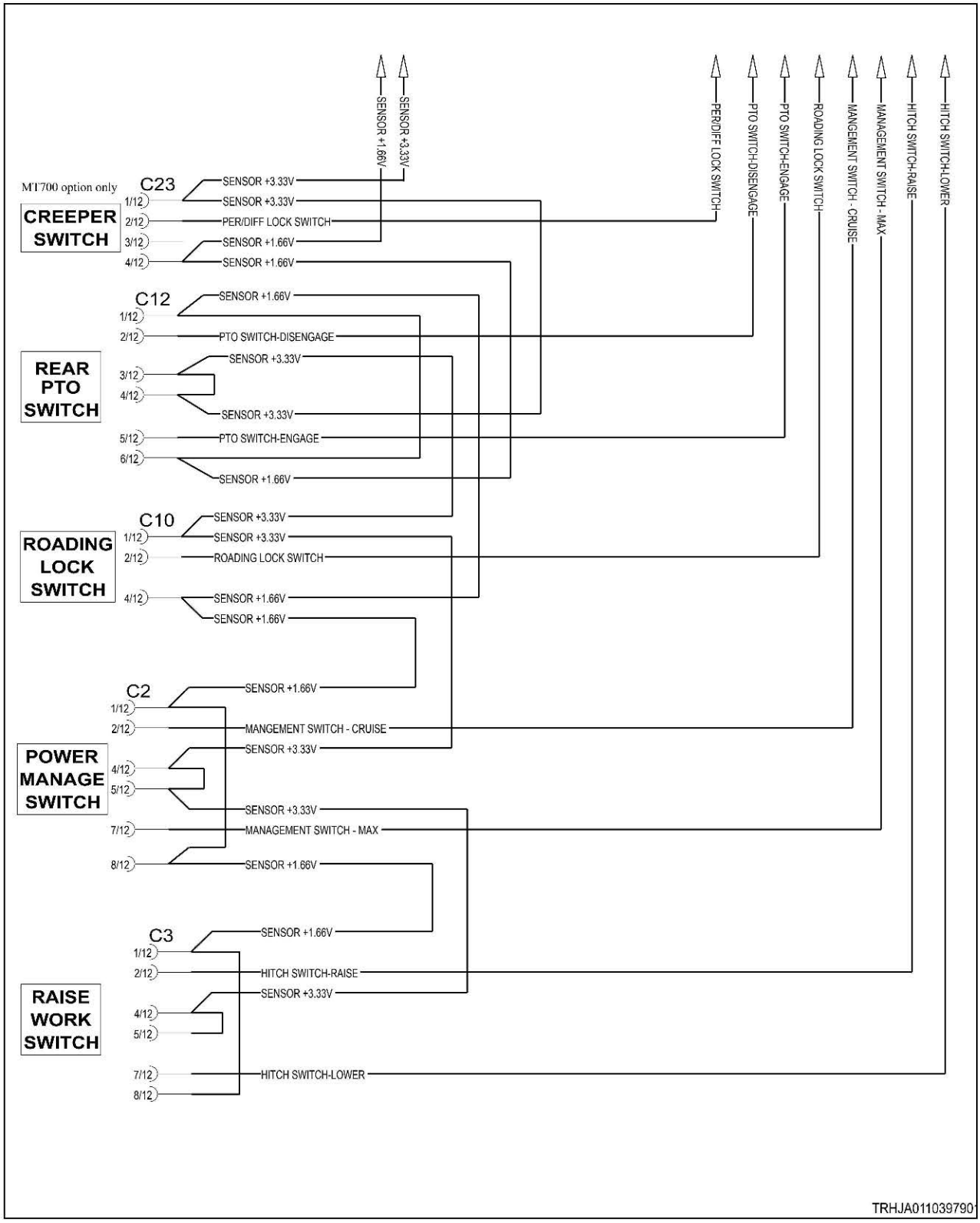
SENSOR +1.66V
SENSOR +3.33V
PER/DIFF LOCK SWITCH
PTO SWITCH-DISENGAGE
PTO SWITCH-ENGAGE
ROADING LOCK SWITCH
MANGEMENT SWITCH - CRUISE
MANAGEMENT SWITCH - MAX
HITCH SWITCH-RAISE
HITCH SWITCH-LOWER
MT700 option only
CREEPER SWITCH
C23
1/12 SENSOR +3.33V
SENSOR +3.33V
2/12 PER/DIFF LOCK SWITCH
3/12 SENSOR +1.66V
4/12 SENSOR +1.66V
C12
1/12 SENSOR +1.66V
2/12 PTO SWITCH-DISENGAGE
REAR PTO SWITCH
3/12 SENSOR +3.33V
4/12
SENSOR +3.33V
5/12 PTO SWITCH-ENGAGE
6/12
SENSOR +1.66V
C10
1/12 SENSOR +3.33V
ROADING LOCK SWITCH
SENSOR +3.33V
2/12 ROADING LOCK SWITCH
4/12 SENSOR +1.66V
SENSOR +1.66V
C2
1/12 SENSOR +1.66V
2/12 MANGEMENT SWITCH - CRUISE
POWER MANAGE SWITCH
SENSOR +3.33V
4/12
5/12
SENSOR +3.33V
7/12 MANAGEMENT SWITCH - MAX
8/12 SENSOR +1.66V
C3
SENSOR +1.66V
1/12
2/12 HITCH SWITCH-RAISE
SENSOR +3.33V
RAISE WORK SWITCH
4/12
5/12
7/12 HITCH SWITCH-LOWER
8/12
TRHJA011039790

Fig. 508

10.7.86.2 One touch switch



Fig. 509 Switch pinout

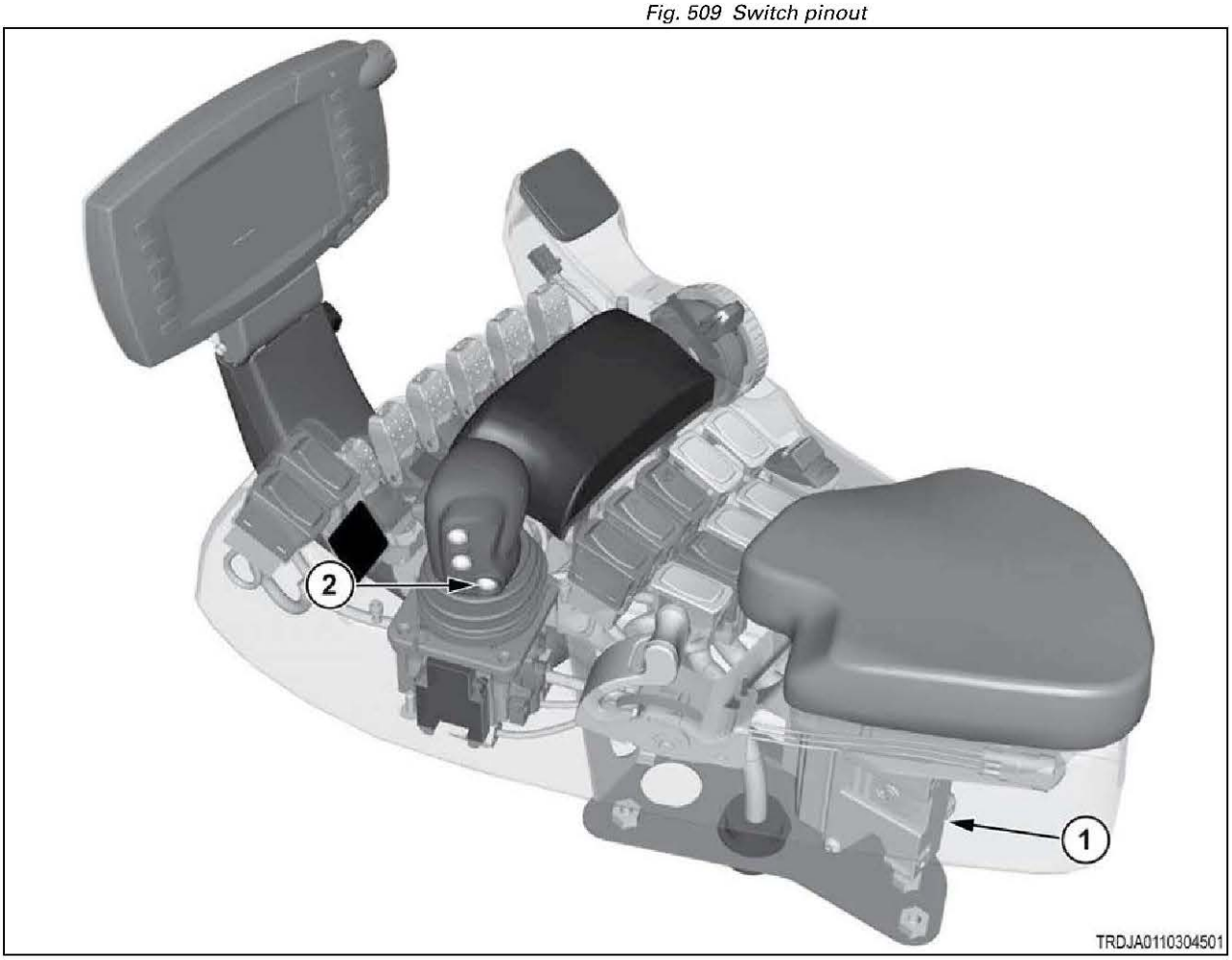

Fig. 510

(1)	Armrest module
(2)	One touch switch

10.7.87 Code SA 05 SPN 520193 FMI 03

The one touch switch signal voltage is above normal.

The signal voltage is higher than the 3.33-volt supply. The most likely cause is a short circuit to a higher voltage circuit.

The switch is a single-pole, double-throw (SPDT) type switch, except the "common" terminal is the data output instead of a power source. The 2 other contacts are connected to 3.33-volt power and 1.66-volt power. Operating the switch selects one of these voltages for the signal output. This error will likely be accompanied by a power supply error too. This information can be used to isolate the cause.

Diagnosis and solution

1. Determine when this error is reported.

a) Turn the key start switch to the on position.

b) Check for this error code (SA 05 SPN 520193 FMI 03) as you operate the switch between on and off states.

Note that power supply errors will likely also be reported, as noted below.

Result

- The error is reported only when the switch is in the off position.

  Error code SA 05 SPN 3511 FMI 03 (3.33V power) is likely also reported.

  Diagnose the power supply error code first.

  Stop.
- The error is reported only when the switch is in the on position.

  Error code SA 05 SPN 3510 FMI 03 (1.66V power) is likely also reported.

  Diagnose the power supply error code first.

  Stop.
- The error is reported regardless of switch position.

  The signal wire is shorted to some voltage source.

  Repair or replace the harness.

  See step 2 to validate the repair.

2. Check if the fault code remains.

a) Inspect and clean the harness connector contacts.

b) Connect all the connectors.

c) Turn the battery disconnect switch to the on position.

d) Turn the key start switch to the on position.

e) Operate the machine at low idle.

f) Check if the fault code remains.

Result

- SPN 520193 FMI 03 is not active.

  Stop.
- SPN 520193 FMI 03 is active.

  Failure of the armrest module is possible but not common. Exit the procedure and do the procedure again. If the fault code remains active, replace the armrest module.

  Stop.

10.7.87.1 Transmission control lever electrical schematic

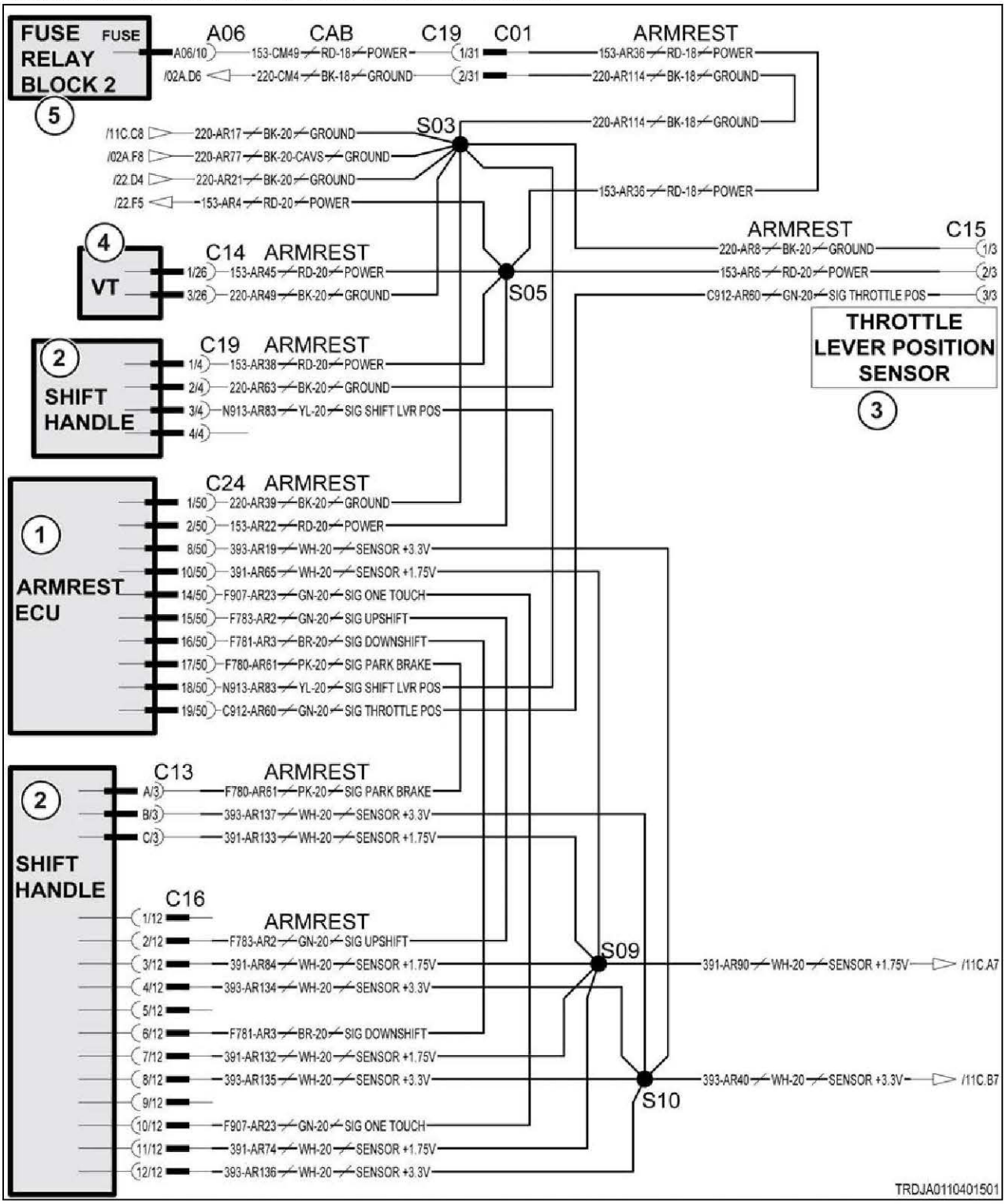

Fig. 511

Schematic legend		
Item	**Schematic term**	**Description**
1	ARMREST ECU	Armrest module
2	SHIFT HANDLE	Transmission control lever
3	THROTTLE LEVER POSITION SENSOR	Throttle lever position sensor
4	VT	Virtual terminal
5	FUSE RELAY BLOCK 2	Fuse relay block 2
--	SIG THROTTLE POS	Signal throttle position
--	SIG UPSHIFT	Signal upshift
--	SIG DOWNSHIFT	Signal downshift
--	SIG ONE TOUCH	Signal one touch
--	SIG PARK BRAKE	Signal park brake
--	SIG SHIFT LVR POSITION	Signal transmission control lever

1.7v and 3.3v schematics

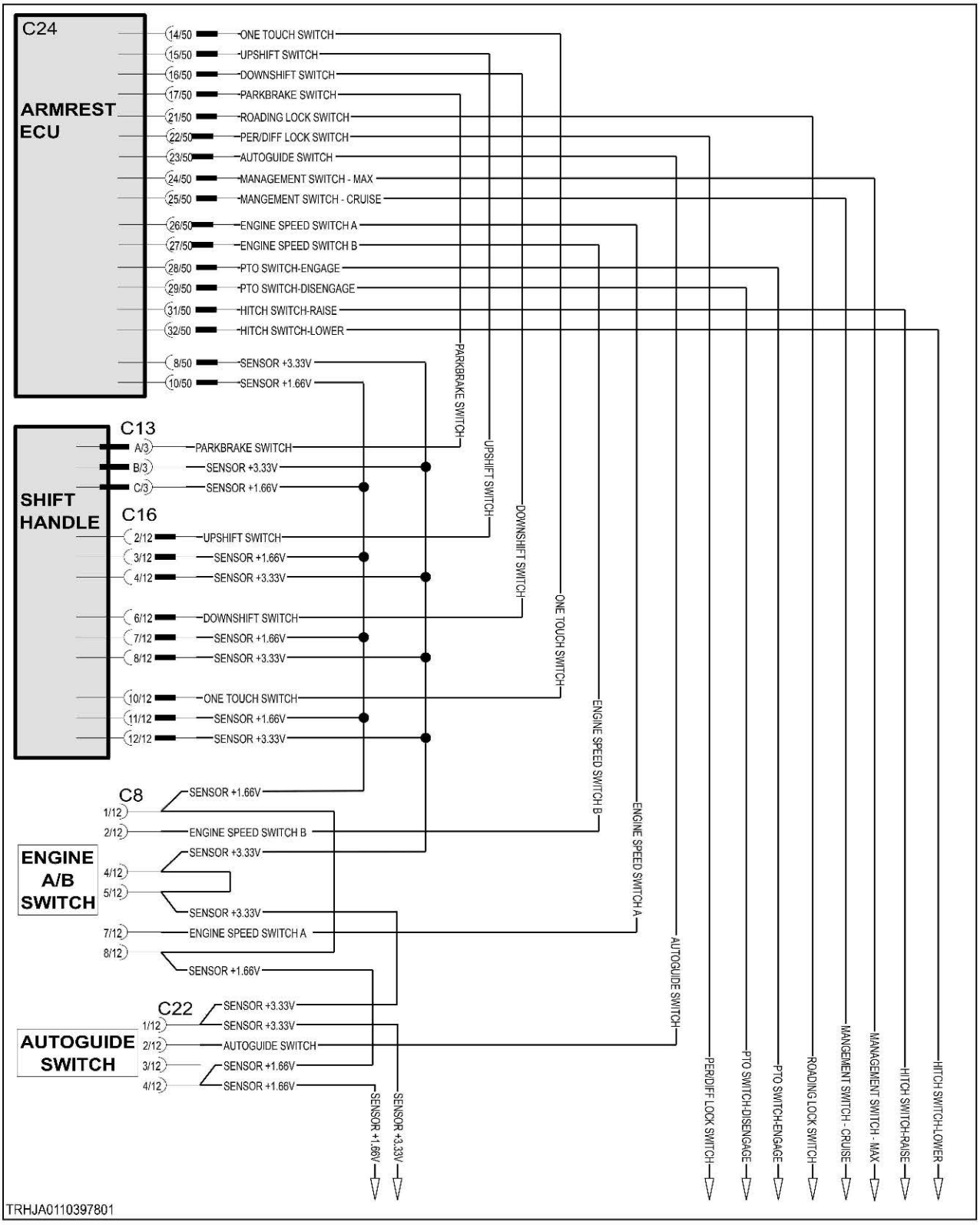

Fig. 512

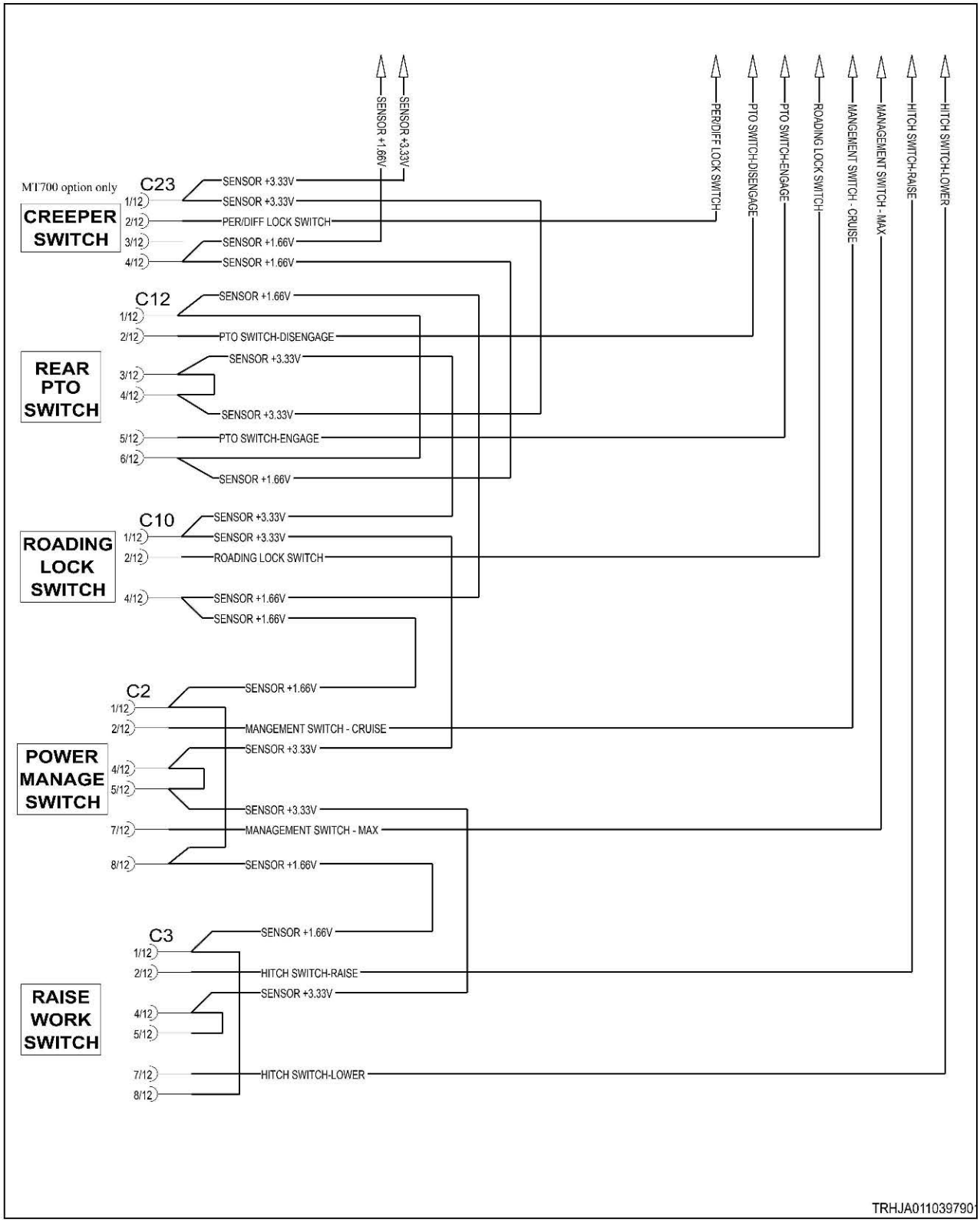
SENSOR +1.66V
SENSOR +3.33V
PER/DIFF LOCK SWITCH
PTO SWITCH-DISENGAGE
PTO SWITCH-ENGAGE
ROADING LOCK SWITCH
MANGEMENT SWITCH - CRUISE
MANAGEMENT SWITCH - MAX
HITCH SWITCH-RAISE
HITCH SWITCH-LOWER
MT700 option only
CREEPER SWITCH
C23
1/12 SENSOR +3.33V
2/12 SENSOR +3.33V
3/12 PER/DIFF LOCK SWITCH
4/12 SENSOR +1.66V
SENSOR +1.66V
REAR PTO SWITCH
C12
1/12 SENSOR +1.66V
2/12 PTO SWITCH-DISENGAGE
3/12 SENSOR +3.33V
4/12
SENSOR +3.33V
5/12 PTO SWITCH-ENGAGE
6/12
SENSOR +1.66V
ROADING LOCK SWITCH
C10
1/12 SENSOR +3.33V
SENSOR +3.33V
2/12 ROADING LOCK SWITCH
4/12 SENSOR +1.66V
SENSOR +1.66V
POWER MANAGE SWITCH
C2
1/12 SENSOR +1.66V
2/12 MANGEMENT SWITCH - CRUISE
SENSOR +3.33V
4/12
5/12
SENSOR +3.33V
7/12 MANAGEMENT SWITCH - MAX
8/12 SENSOR +1.66V
RAISE WORK SWITCH
C3
1/12 SENSOR +1.66V
2/12 HITCH SWITCH-RAISE
SENSOR +3.33V
4/12
5/12
7/12 HITCH SWITCH-LOWER
8/12
TRHJA011039790

Fig. 513

10.7.87.2 One touch switch



Fig. 514 Switch pinout

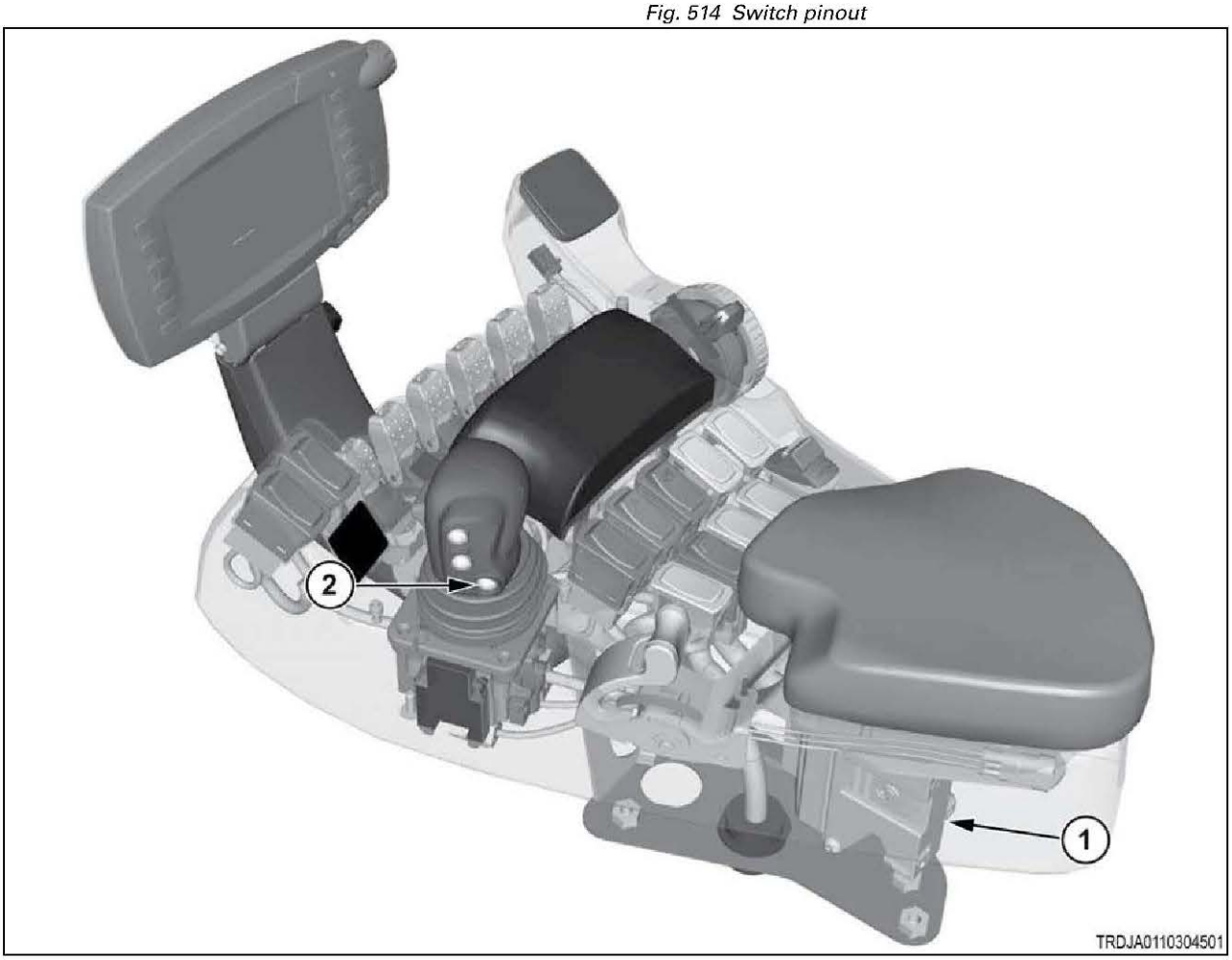

Fig. 515

(1)	Armrest module
(2)	One touch switch

10.7.88 Code SA 05 SPN 520193 FMI 04

The one touch switch signal voltage is below normal.

The signal voltage is lower than the 1.66-volt supply. The most likely cause is a short circuit to ground.

The switch is a single-pole, double-throw (SPDT) type switch, except the "common" terminal is the data output instead of a power source. The 2 other contacts are connected to 3.33-volt power and 1.66-volt power. Operating the switch selects one of these voltages for the signal output. This error will likely be accompanied by a power supply error too. This information can be used to isolate the cause.

Diagnosis and solution

1. Determine when this error is reported.

a) Turn the key start switch to the on position.

b) Check for this error code (SA 05 SPN 520193 FMI 04) as you operate the switch between on and off states.

Note that power supply errors will likely also be reported, as noted below.

Result

- The error is reported only when the switch is in the off position.

  Error code SA 05 SPN 3511 FMI 04 (3.33V power) is likely also reported.

  Diagnose the power supply error code first.

  Stop.
- The error is reported only when the switch is in the on position.

  Error code SA 05 SPN 3510 FMI 04 (1.66V power) is likely also reported.

  Diagnose the power supply error code first.

  Stop.
- The error is reported regardless of switch position.

  The signal wire is shorted to ground.

  Repair or replace the harness.

  See step 2 to validate the repair.

2. Check if the fault code remains.

a) Inspect and clean the harness connector contacts.

b) Connect all the connectors.

c) Turn the battery disconnect switch to the on position.

d) Turn the key start switch to the on position.

e) Operate the machine at low idle.

f) Check if the fault code remains.

Result

- SPN 520193 FMI 04 is not active.

  Stop.
- SPN 520193 FMI 04 is active.

  Failure of the armrest module is possible but not common. Exit the procedure and do the procedure again. If the fault code remains active, replace the armrest module.

  Stop.

10.7.88.1 Transmission control lever electrical schematic

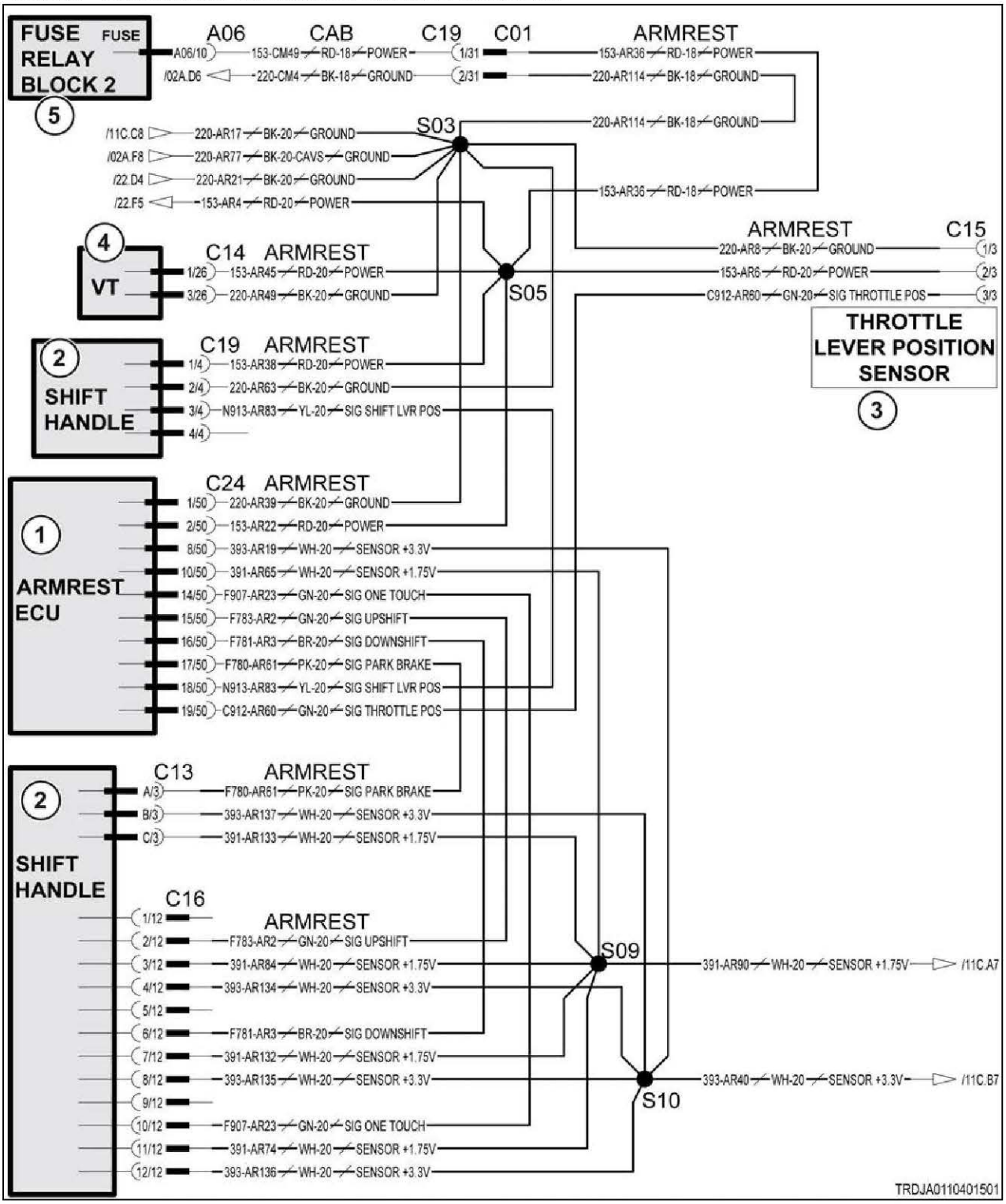

Fig. 516

Schematic legend		
Item	**Schematic term**	**Description**
1	ARMREST ECU	Armrest module
2	SHIFT HANDLE	Transmission control lever
3	THROTTLE LEVER POSITION SENSOR	Throttle lever position sensor
4	VT	Virtual terminal
5	FUSE RELAY BLOCK 2	Fuse relay block 2
--	SIG THROTTLE POS	Signal throttle position
--	SIG UPSHIFT	Signal upshift
--	SIG DOWNSHIFT	Signal downshift
--	SIG ONE TOUCH	Signal one touch
--	SIG PARK BRAKE	Signal park brake
--	SIG SHIFT LVR POSITION	Signal transmission control lever

1.7v and 3.3v schematics

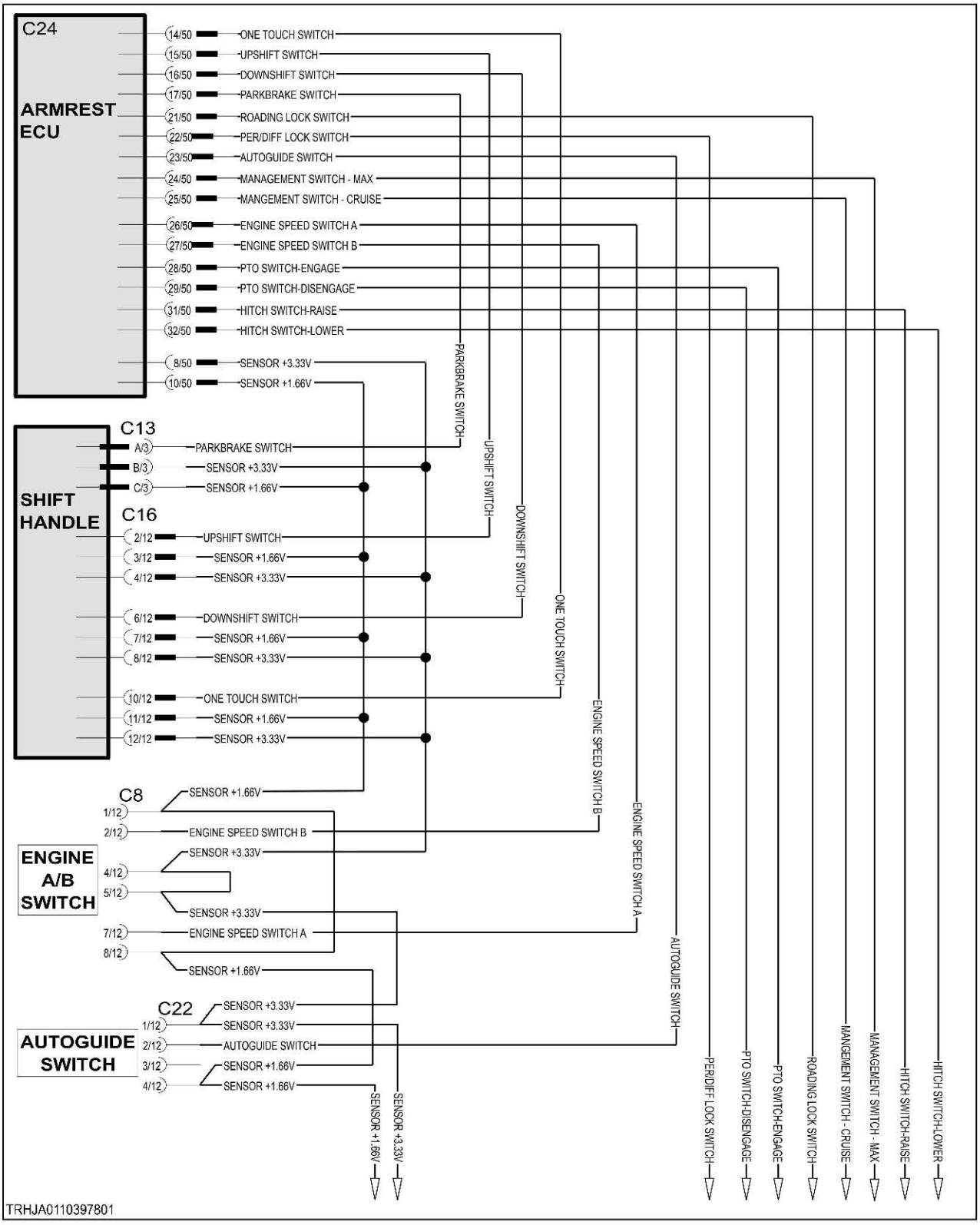

Fig. 517

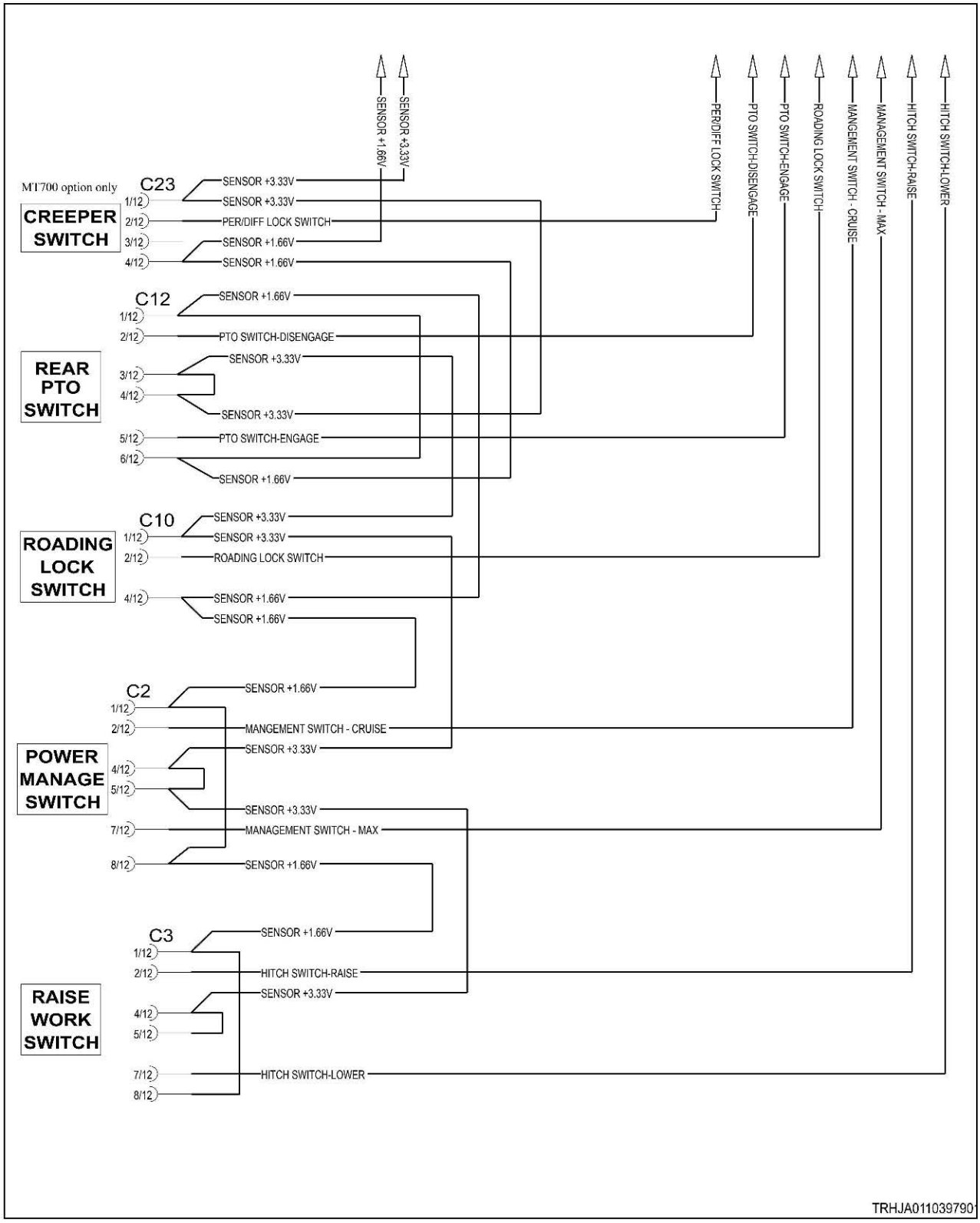
SENSOR +1.66V
SENSOR +3.33V
PER/DIFF LOCK SWITCH
PTO SWITCH-DISENGAGE
PTO SWITCH-ENGAGE
ROADING LOCK SWITCH
MANGEMENT SWITCH - CRUISE
MANAGEMENT SWITCH - MAX
HITCH SWITCH-RAISE
HITCH SWITCH-LOWER
MT700 option only
CREEPER SWITCH
C23
1/12 SENSOR +3.33V
SENSOR +3.33V
2/12 PER/DIFF LOCK SWITCH
3/12 SENSOR +1.66V
4/12 SENSOR +1.66V
C12
1/12 SENSOR +1.66V
2/12 PTO SWITCH-DISENGAGE
REAR PTO SWITCH
3/12 SENSOR +3.33V
4/12
SENSOR +3.33V
5/12 PTO SWITCH-ENGAGE
6/12
SENSOR +1.66V
C10
ROADING LOCK SWITCH
1/12 SENSOR +3.33V
SENSOR +3.33V
2/12 ROADING LOCK SWITCH
4/12 SENSOR +1.66V
SENSOR +1.66V
C2
1/12 SENSOR +1.66V
2/12 MANGEMENT SWITCH - CRUISE
POWER MANAGE SWITCH
SENSOR +3.33V
4/12
5/12
SENSOR +3.33V
7/12 MANAGEMENT SWITCH - MAX
8/12 SENSOR +1.66V
C3
SENSOR +1.66V
1/12
2/12 HITCH SWITCH-RAISE
SENSOR +3.33V
RAISE WORK SWITCH
4/12
5/12
7/12 HITCH SWITCH-LOWER
8/12
TRHJA011039790

Fig. 518

10.7.88.2 One touch switch



Fig. 519 Switch pinout

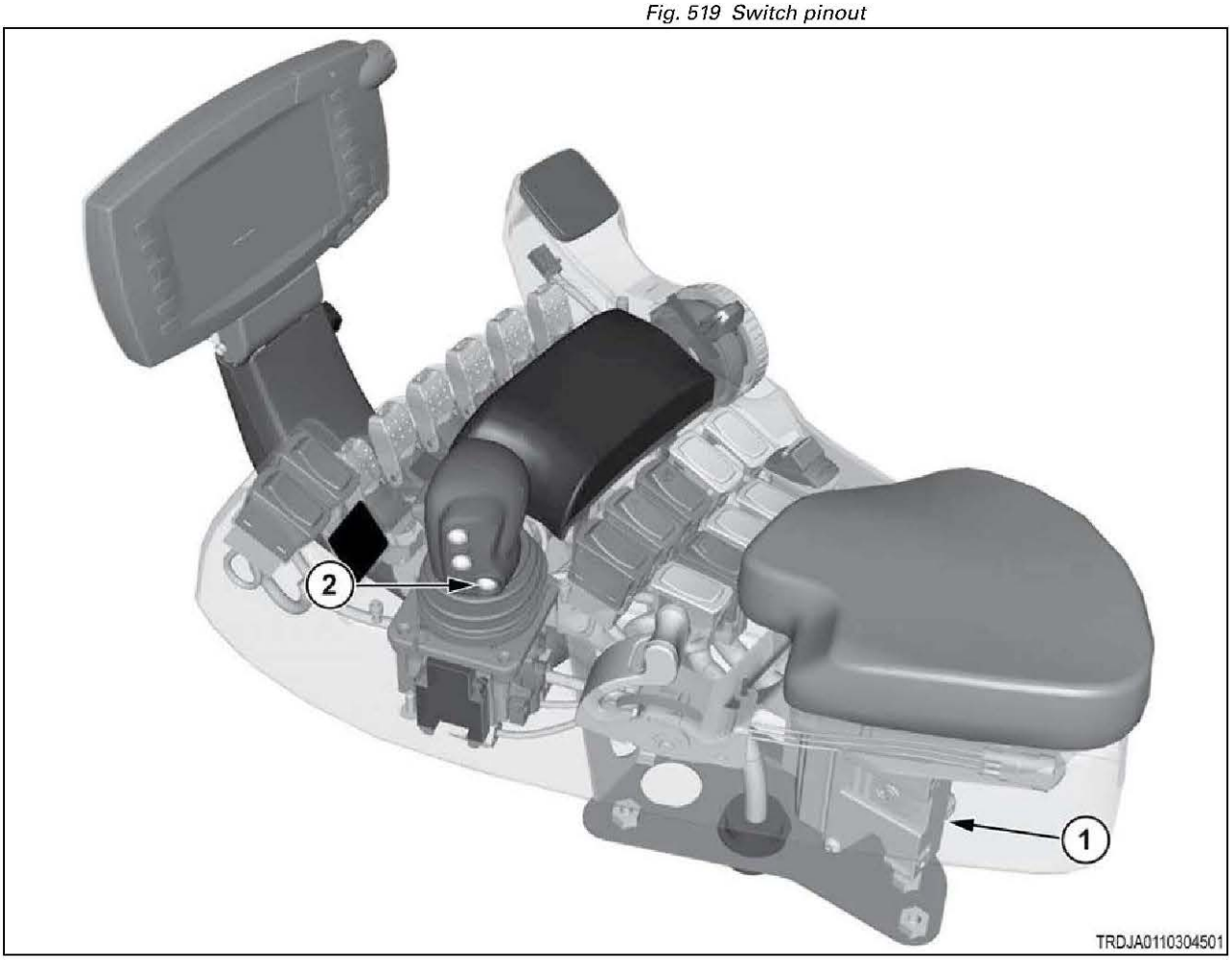

Fig. 520

(1)	Armrest module
(2)	One touch switch

10.7.89 Code SA 05 SPN 520193 FMI 05

Open circuit in the transmission control lever, one touch switch circuit.

The switch is a single-pole, double-throw (SPDT) type switch, except the "common" terminal is the data output instead of a power source. The 2 other contacts are connected to 3.33-volt power and 1.66-volt power. Operating the switch selects one of these voltages for the signal output. These 2 power circuits are shared by several other function switches on the armrest. This knowledge can aid in diagnosing the fault.

Diagnosis and solution

1. Determine when this error is reported.

a) Turn the key start switch to the on position.

b) Check whether the error code is reported as you operate the switch between on and off states.

Result

- The error is reported only when the switch is in the off position.

  The open circuit is in the 3.33V power circuit.

  See step 2 to isolate the location.
- The error is reported only when the switch is in the on position.

  The open circuit is in the 1.66V power circuit.

  See step 2 to isolate the location.
- The error is reported regardless of switch position.

  The open circuit is in the signal circuit.

  Repair or replace the armrest harness.

  See step 3 to validate the repair.

2. Isolate the power circuit open circuit.

a) Operate all other shift lever switches, and at least one downstream armrest switches, according to the list below, from their off to on positions.

Electrical sequence of switches, starting from the armrest module.

1. Shift Handle (3 pushbuttons)
2. Engine A/B switch
3. Autoguide switch
4. Creeper switch
5. Rear PTO
6. Roading Lock switch
7. Power management (cruise/full) switch
8. Hitch Raise/Work switch

b) Observe which other switches (if any) exhibit similar open circuit error codes.

Result

- At least one upstream switch reported a similar error.

  The open circuit lies at, or just upstream from, that switch.

  Repair or replace the armrest harness.

  See step 3 to validate the repair.

- Only downstream switches reported similar errors.

  The harness is open circuited at this switch location.

  Repair or replace the harness.

  See step 3 to validate the repair.
- No other switches reported similar errors.

  The switch is at fault.

  Replace the switch.

  See step 3 to validate the repair.

3. Check if the fault code remains.

a) Inspect and clean the harness connector contacts.
b) Connect all the connectors.
c) Turn the battery disconnect switch to the on position.
d) Turn the key start switch to the on position.
e) Operate the machine at low idle.
f) Check if the fault code remains.

Result

- SPN 520193 FMI 05 is not active.

  Stop.
- SPN 250193 FMI 05 is active.

  Failure of the armrest module is possible but not common. Exit the procedure and do the procedure again. If the fault code remains active, replace the armrest module.

  Stop.

10.7.89.1 Transmission control lever electrical schematic

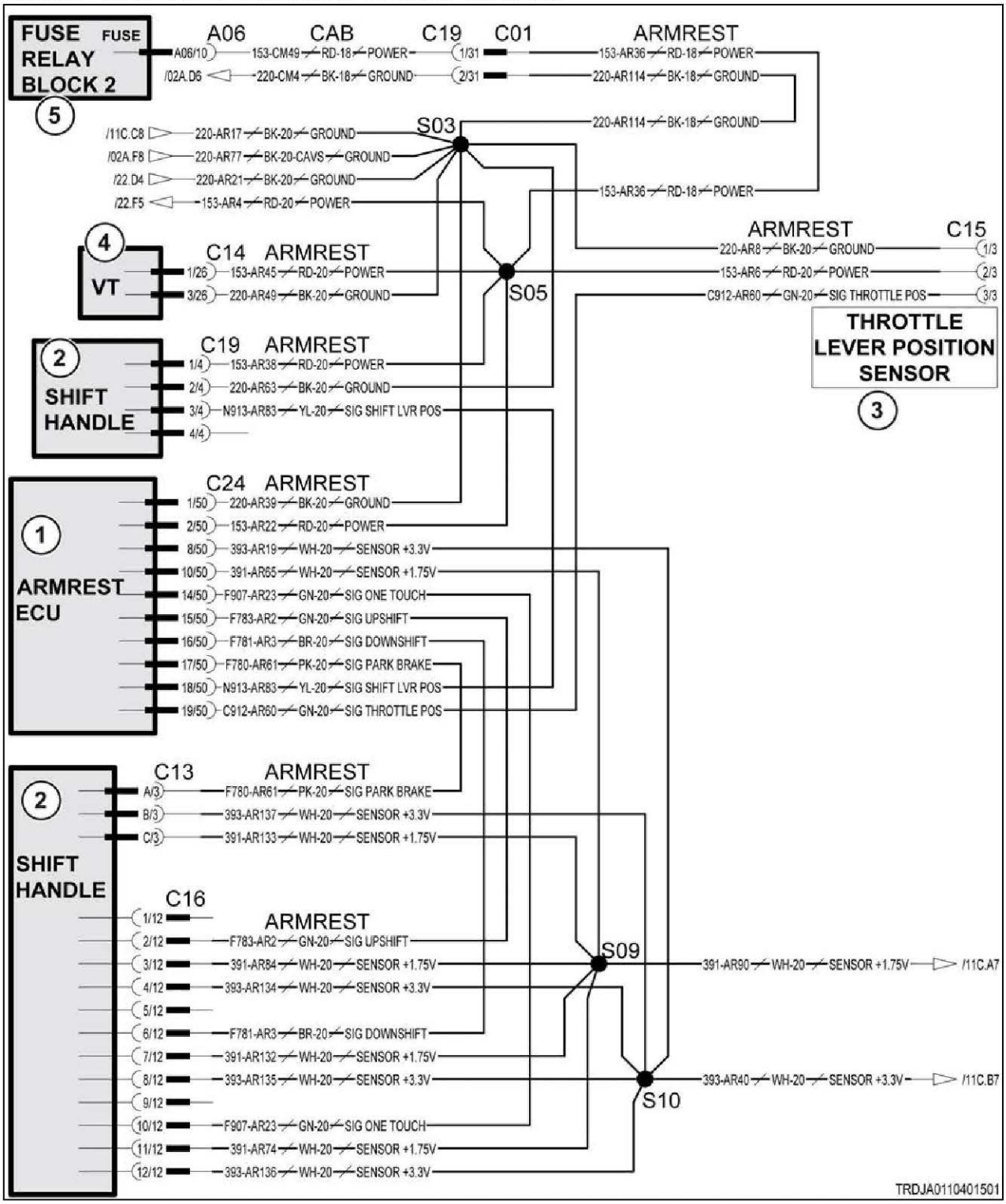

Fig. 521

Schematic legend		
Item	**Schematic term**	**Description**
1	ARMREST ECU	Armrest module
2	SHIFT HANDLE	Transmission control lever
3	THROTTLE LEVER POSITION SENSOR	Throttle lever position sensor
4	VT	Virtual terminal
5	FUSE RELAY BLOCK 2	Fuse relay block 2
--	SIG THROTTLE POS	Signal throttle position
--	SIG UPSHIFT	Signal upshift
--	SIG DOWNSHIFT	Signal downshift
--	SIG ONE TOUCH	Signal one touch
--	SIG PARK BRAKE	Signal park brake
--	SIG SHIFT LVR POSITION	Signal transmission control lever

1.7v and 3.3v schematics

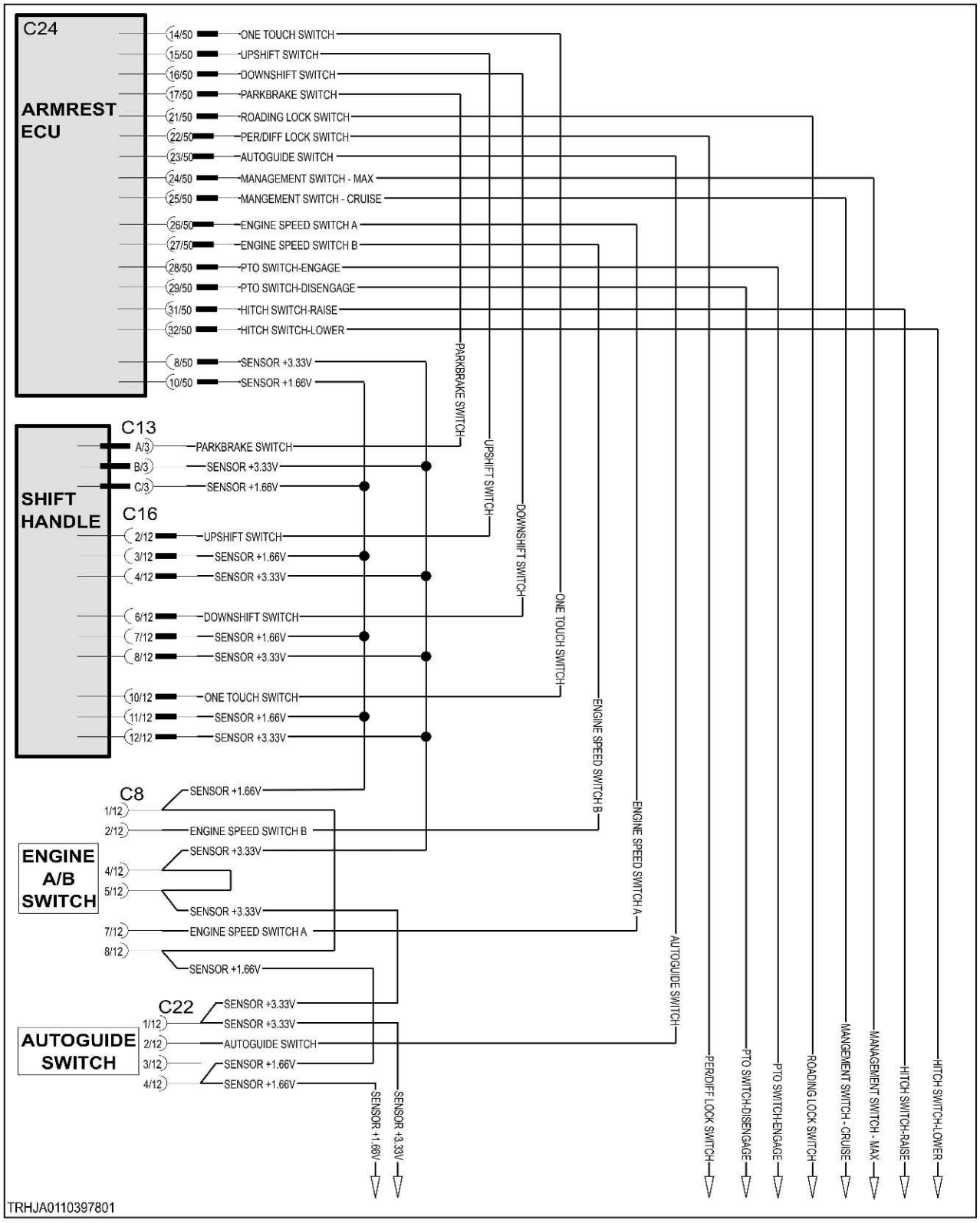

Fig. 522

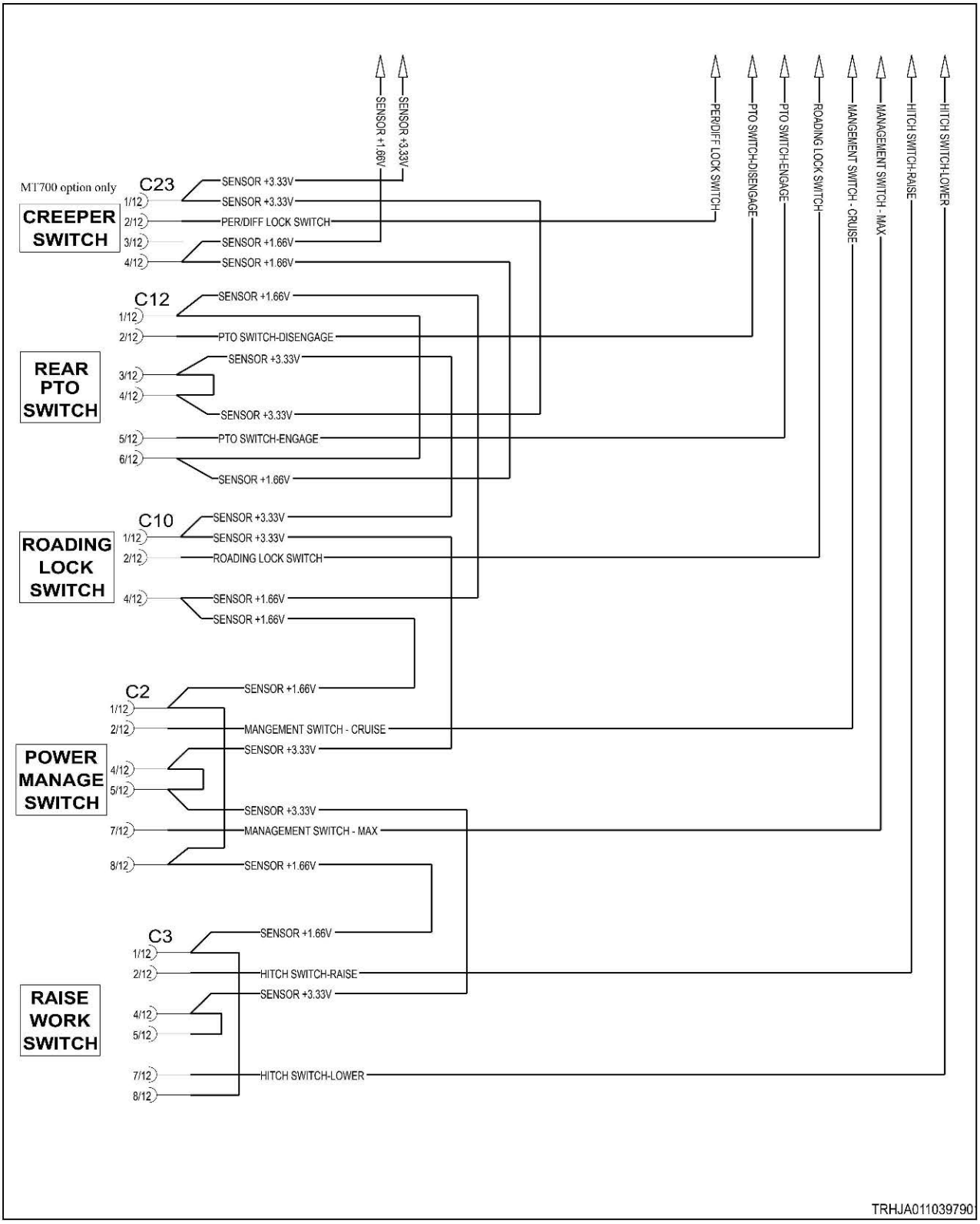
SENSOR +1.66V
SENSOR +3.33V
PER/DIFF LOCK SWITCH
PTO SWITCH-DISENGAGE
PTO SWITCH-ENGAGE
ROADING LOCK SWITCH
MANGEMENT SWITCH - CRUISE
MANAGEMENT SWITCH - MAX
HITCH SWITCH-RAISE
HITCH SWITCH-LOWER
MT700 option only
CREEPER SWITCH
C23
1/12 SENSOR +3.33V
2/12 SENSOR +3.33V
3/12 PER/DIFF LOCK SWITCH
4/12 SENSOR +1.66V
SENSOR +1.66V
REAR PTO SWITCH
C12
1/12 SENSOR +1.66V
2/12 PTO SWITCH-DISENGAGE
3/12 SENSOR +3.33V
4/12
SENSOR +3.33V
5/12 PTO SWITCH-ENGAGE
6/12
SENSOR +1.66V
ROADING LOCK SWITCH
C10
1/12 SENSOR +3.33V
SENSOR +3.33V
2/12 ROADING LOCK SWITCH
4/12 SENSOR +1.66V
SENSOR +1.66V
POWER MANAGE SWITCH
C2
1/12 SENSOR +1.66V
2/12 MANGEMENT SWITCH - CRUISE
SENSOR +3.33V
4/12
5/12
SENSOR +3.33V
7/12 MANAGEMENT SWITCH - MAX
8/12 SENSOR +1.66V
RAISE WORK SWITCH
C3
1/12 SENSOR +1.66V
2/12 HITCH SWITCH-RAISE
SENSOR +3.33V
4/12
5/12
7/12 HITCH SWITCH-LOWER
8/12
TRHJA011039790

Fig. 523

10.7.89.2 One touch switch



Fig. 524 Switch pinout

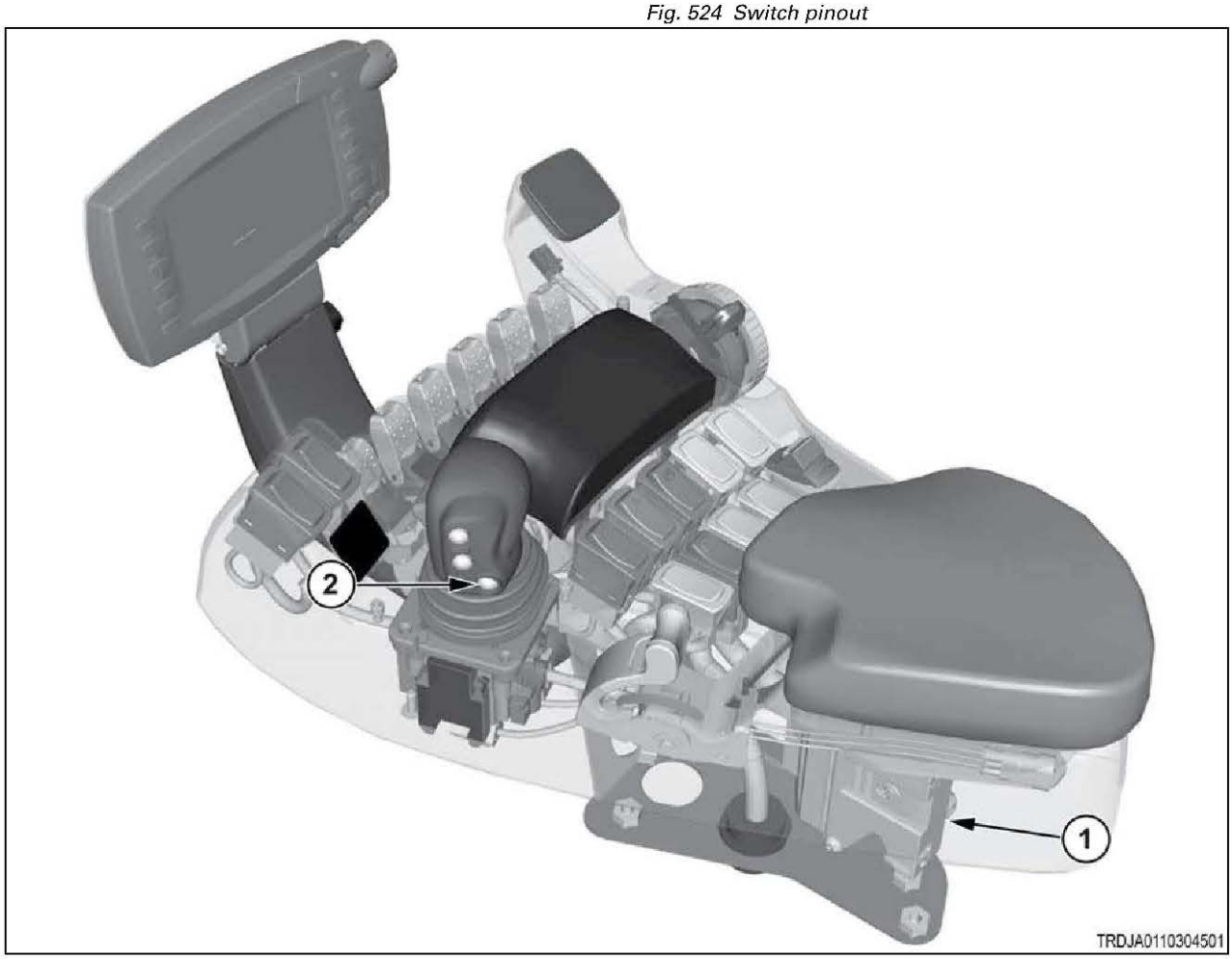

Fig. 525

(1)	Armrest module
(2)	One touch switch

10.7.90 Code SA 05 SPN 520194 FMI 02

The roading lockout switch signal is erratic, intermittent, or incorrect.

The switch is a single-pole, double-throw (SPDT) type switch, except the "common" terminal is the data output instead of a power source. The 2 other contacts are connected to 3.33-volt power and 1.66-volt power. Operating the switch selects one of these voltages for the signal output. These 2 power circuits are shared by several other function switches on the armrest. This knowledge can aid in diagnosing the fault.

Diagnosis and solution

1. Check the function of upstream and downstream switches that share power circuits.

a) Turn the key start switch to the on position.
b) Operate the rear PTO switch in both directions.
c) Operate the power management switch in both directions.
d) Check for additional error codes.

Result

- SA 05 SPN 1894 FMI 02 (PTO) is reported.

  Focus further examination on the power circuits between the PTO switch and the armrest controller.

  See step 2 to check for loose connections.
- SA 05 SPN 601 FMI 02 (power management) is reported, but not a PTO error.

  Focus further examination on the power circuits between the roading lockout switch and the rear PTO switch.

  See step 2 to check for loose connections.
- No additional error codes are reported.

  The power circuits are not suspect.

  Focus further examination on the switch signal output.

  See step 2 to check for loose connections.

2. Inspect all harness and switch connections.

a) Turn the key start switch to the off position.
b) Turn the battery disconnect switch to the off position.
c) Open the top of the armrest console.
d) Inspect and clean all connectors and connector contacts:

- Look for bent or worn pins.
- Look for deformed or oversized sockets.
- Look for corrosion on the pins and sockets. Corrosion is a sign of a loose connection.
- Look for signs of overheating. Overheating is a sign of a poor connection, and can further loosen the pin or socket mount. The whole connector body should be replaced.

e) Make sure to inspect the circuits identified in step 1 as they pass through the following connector locations:

- Switch signal at the armrest ECU C24-21.
- All contacts at the roading lockout switch.

- The 1.66V and 3.33V power signals as they pass through the following switches:

  Roading lockout switch

  Rear PTO switch

  Creeper switch

  Auto Guide switch

  Engine A/B switch

  Shift Handle

  Armrest ECU C24-8 (3.33V) and C24-10 (1.66V)

f) Repair or replace any connector or harness found faulty.

Result

- No faulty contacts were found.

  See step 3 to check the switch function.
- Faulty contacts were found and repaired.

  See step 4 to validate the repair.

3. Check the switch function.

a) Disconnect the roading lockout switch.

b) Check resistance between contacts 2 & 1 and 2 & 4, as you operate the switch from on and off.

- In the on-position, contacts 2 and 4 should have continuity.
- In the off-position, contacts 2 and 1 should have continuity.

Result

- Continuity checks are correct.

  See step 4 to check if the error persists.
- Continuity checks are incorrect.

  Replace the switch.

  See step 4 to validate the repair.

4. Check if the fault code remains.

a) Inspect and clean the harness connector contacts.

b) Connect all the connectors.

c) Turn the battery disconnect switch to the on position.

d) Turn the key start switch to the on position.

e) Operate the machine at low idle.

f) Check if the fault code remains.

Result

- SPN 520194 FMI 02 is not active.

  Stop.
- SPN 520194 FMI 02 is active.

  Failure of the armrest module is possible but not common. Exit the procedure and do the procedure again. If the fault code remains active, replace the armrest module.

  Stop.

10.7.90.1 Auto-Guide™ switch electrical schematic

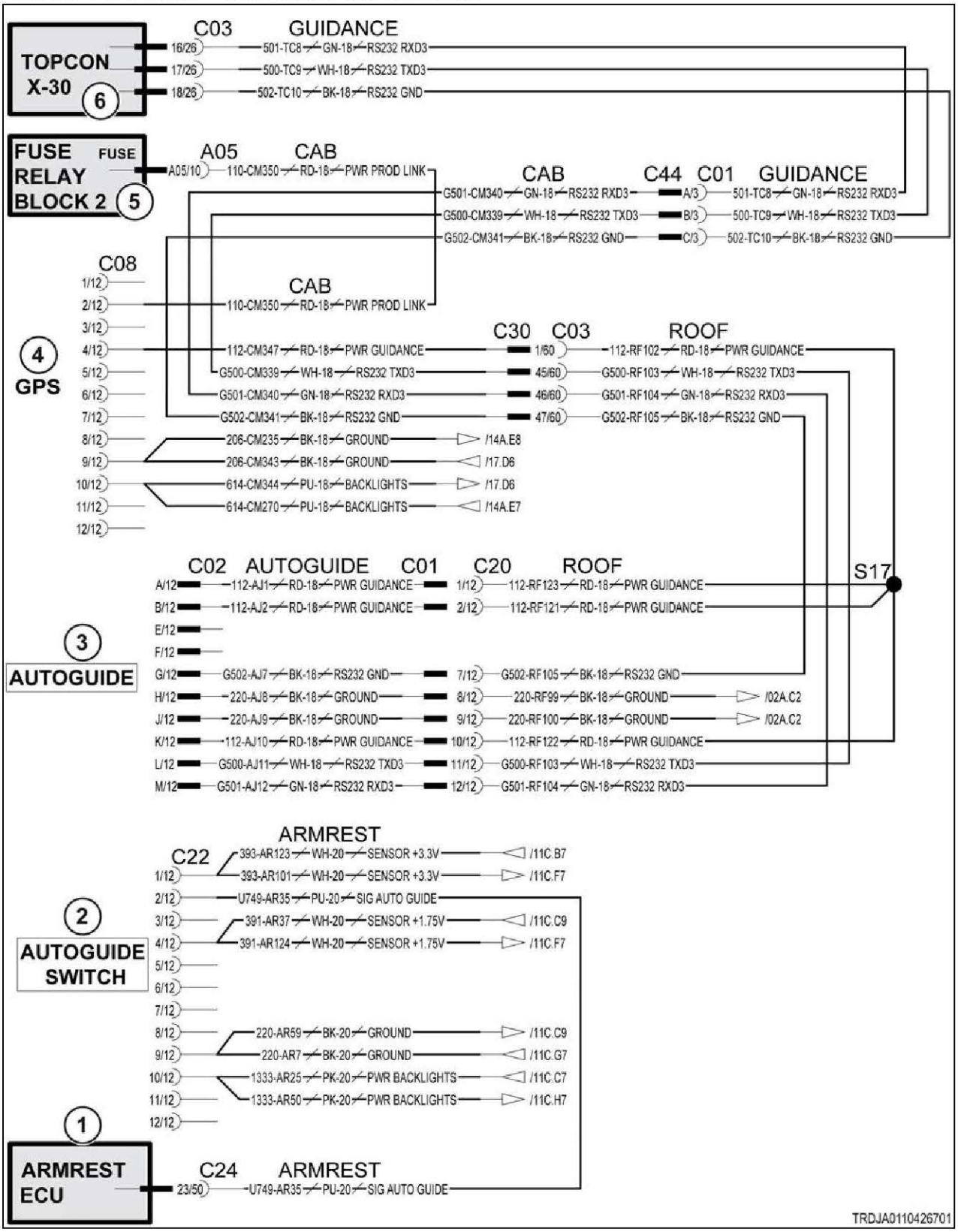

Fig. 526

Schematic legend		
Item	**Schematic term**	**Description**
1	ARMREST ECU	Armrest module
2	AUTOGUIDE SWITCH	Auto-Guide™ switch
3	AUTOGUIDE	Auto-Guide™
4	GPS	Global positioning system
5	FUSE RELAY BLOCK 2	Fuse relay block 2
6	TOPCON X-30	Topcon
--	PWR BACKLIGHTS	Power to rear lamps
--	PWR GUIDANCE	Power to guidance
--	PWR PROD LINK	Power to product link
--	SIG AUTOGUIDE	Signal Auto-Guide™

1.7v and 3.3v schematics

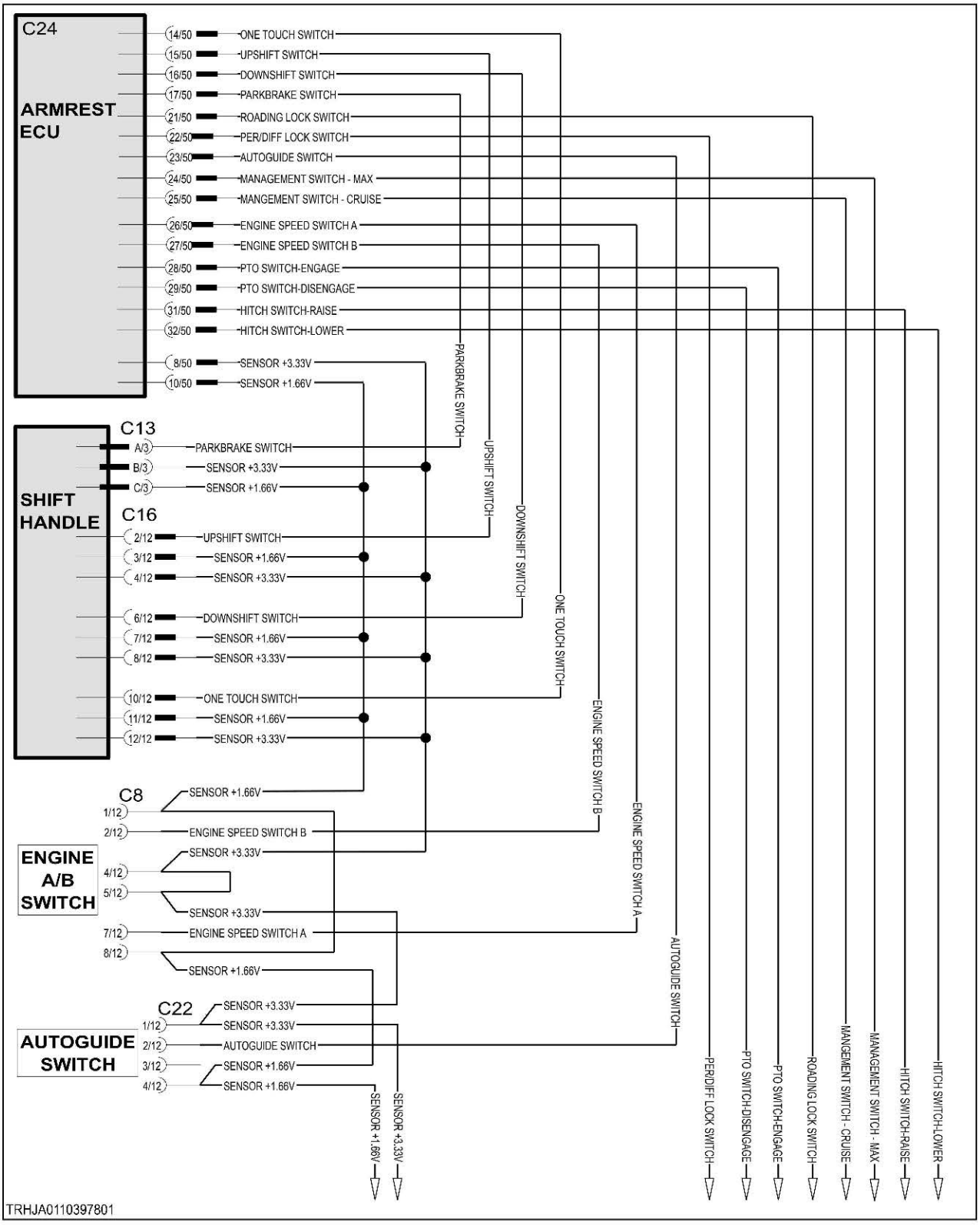

Fig. 527

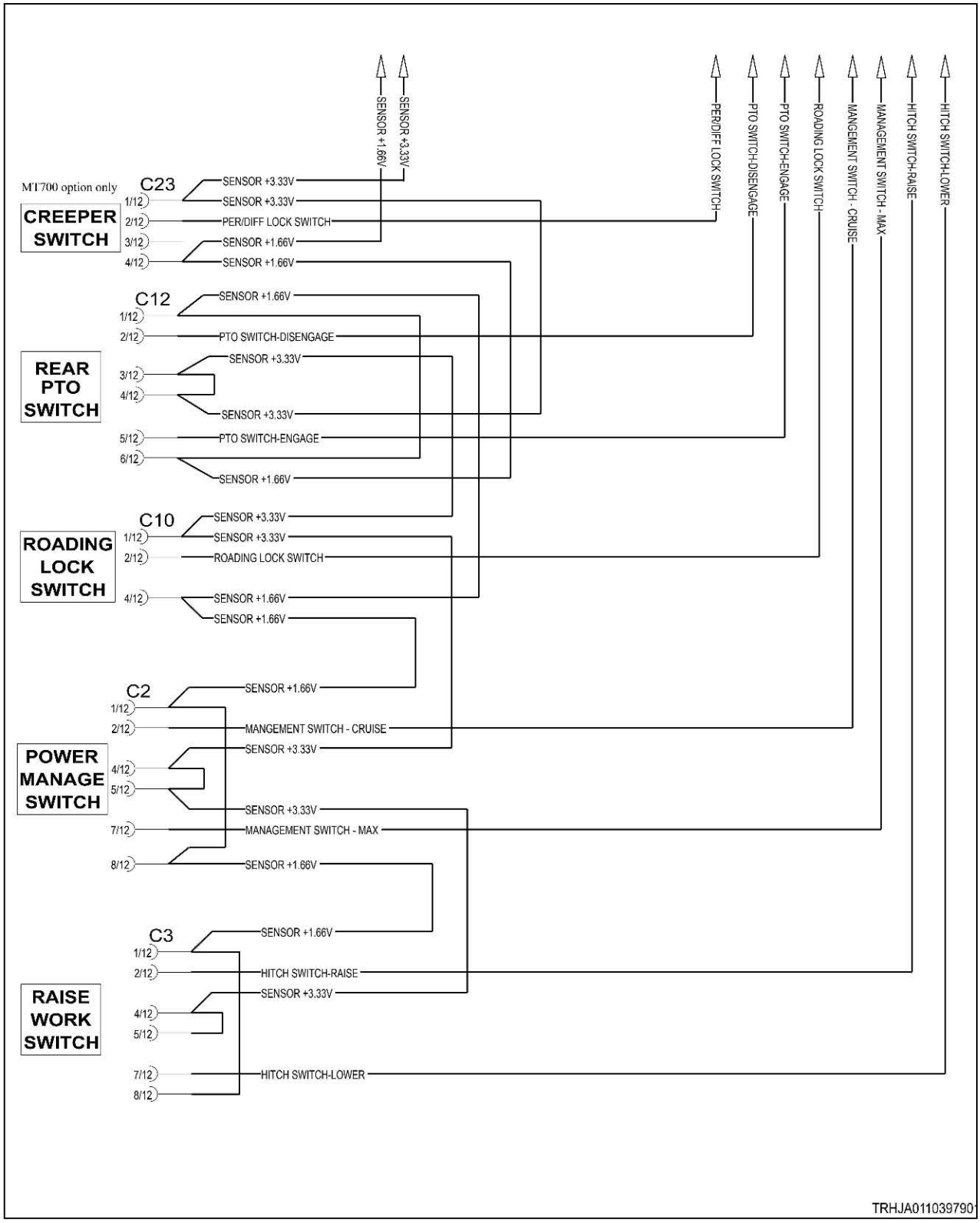
SENSOR +1.66V
SENSOR +3.33V
PER/DIFF LOCK SWITCH
PTO SWITCH-DISENGAGE
PTO SWITCH-ENGAGE
ROADING LOCK SWITCH
MANGEMENT SWITCH - CRUISE
MANAGEMENT SWITCH - MAX
HITCH SWITCH-RAISE
HITCH SWITCH-LOWER
MT700 option only
CREEPER SWITCH
C23
1/12 SENSOR +3.33V
2/12 SENSOR +3.33V
3/12 PER/DIFF LOCK SWITCH
4/12 SENSOR +1.66V
SENSOR +1.66V
REAR PTO SWITCH
C12
1/12 SENSOR +1.66V
2/12 PTO SWITCH-DISENGAGE
3/12 SENSOR +3.33V
4/12
SENSOR +3.33V
5/12 PTO SWITCH-ENGAGE
6/12
SENSOR +1.66V
ROADING LOCK SWITCH
C10
1/12 SENSOR +3.33V
SENSOR +3.33V
2/12 ROADING LOCK SWITCH
4/12 SENSOR +1.66V
SENSOR +1.66V
POWER MANAGE SWITCH
C2
1/12 SENSOR +1.66V
2/12 MANGEMENT SWITCH - CRUISE
SENSOR +3.33V
4/12
5/12
SENSOR +3.33V
7/12 MANAGEMENT SWITCH - MAX
8/12 SENSOR +1.66V
RAISE WORK SWITCH
C3
1/12 SENSOR +1.66V
2/12 HITCH SWITCH-RAISE
SENSOR +3.33V
4/12
5/12
7/12 HITCH SWITCH-LOWER
8/12
TRHJA011039790

Fig. 528

10.7.90.2 Roading lockout switch



Fig. 529 Switch pinout

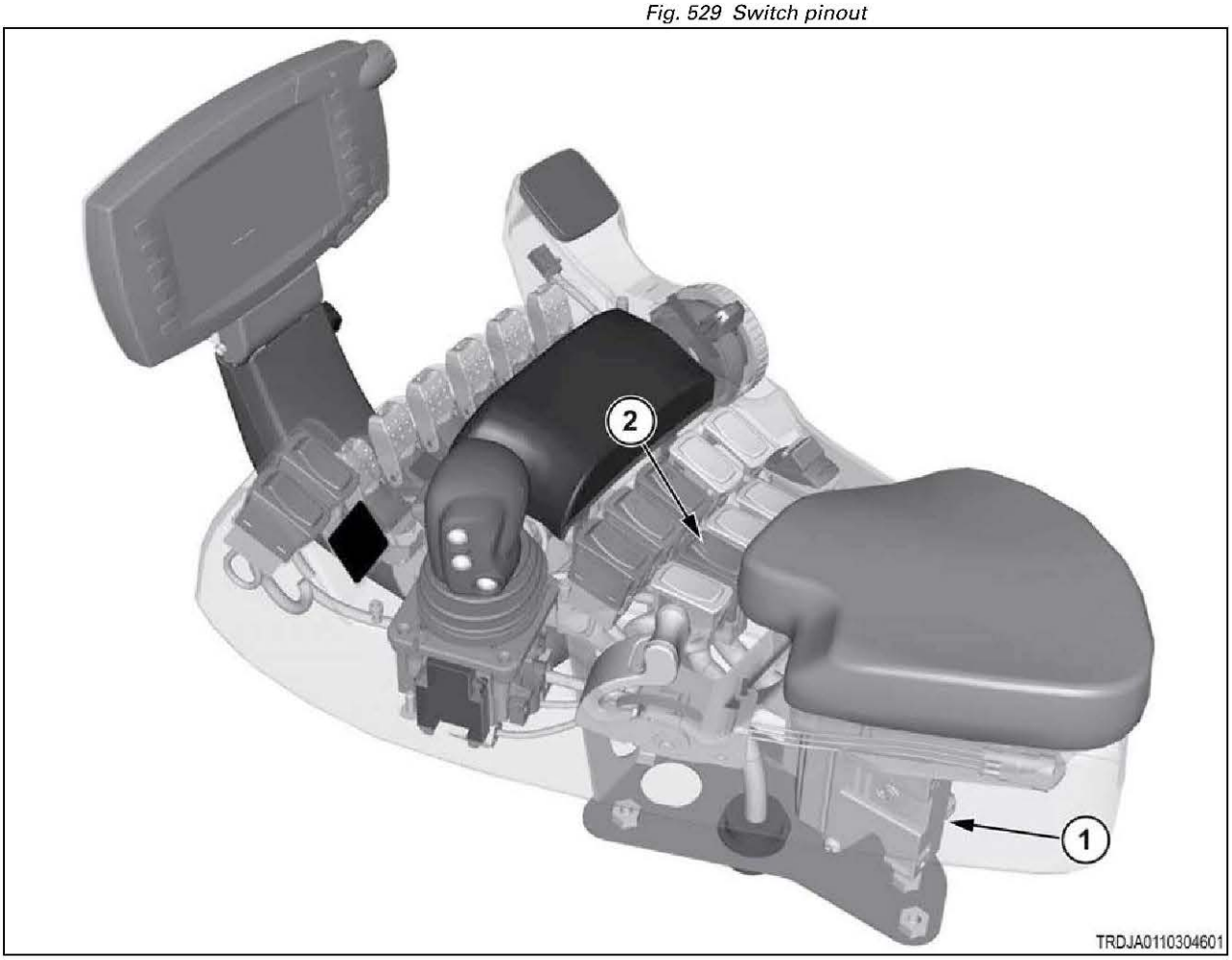

Fig. 530

(1)	Armrest module
(2)	Roading lockout switch

10.7.91 Code SA 05 SPN 520194 FMI 03

The roading lockout switch signal voltage is above normal.

The signal voltage is higher than the 3.33-volt supply. The most likely cause is a short circuit to a higher voltage circuit.

The switch is a single-pole, double-throw (SPDT) type switch, except the "common" terminal is the data output instead of a power source. The 2 other contacts are connected to 3.33-volt power and 1.66-volt power. Operating the switch selects one of these voltages for the signal output. This error will likely be accompanied by a power supply error too. This information can be used to isolate the cause.

Diagnosis and solution

1. Determine when this error is reported.

a) Turn the key start switch to the on position.

b) Check for this error code (SA 05 SPN 520194 FMI 03) as you operate the switch between on and off states.

Note that power supply errors will likely also be reported, as noted below.

Result

- The error is reported only when the switch is in the off position.

  Error code SA 05 SPN 3511 FMI 03 (3.33V power) is likely also reported.

  Diagnose the power supply error code first.

  Stop.
- The error is reported only when the switch is in the on position.

  Error code SA 05 SPN 3510 FMI 03 (1.66V power) is likely also reported.

  Diagnose the power supply error code first.

  Stop.
- The error is reported regardless of switch position.

  The signal wire is shorted to some voltage source.

  Repair or replace the harness.

  See step 2 to validate the repair.

2. Check if the fault code remains.

a) Inspect and clean the harness connector contacts.

b) Connect all the connectors.

c) Turn the battery disconnect switch to the on position.

d) Turn the key start switch to the on position.

e) Operate the machine at low idle.

f) Check if the fault code remains.

Result

- SPN 520194 FMI 03 is not active.

  Stop.
- SPN 520194 FMI 03 is active.

  Failure of the armrest module is possible but not common. Exit the procedure and do the procedure again. If the fault code remains active, replace the armrest module.

  Stop.

10.7.91.1 Auto-Guide™ switch electrical schematic

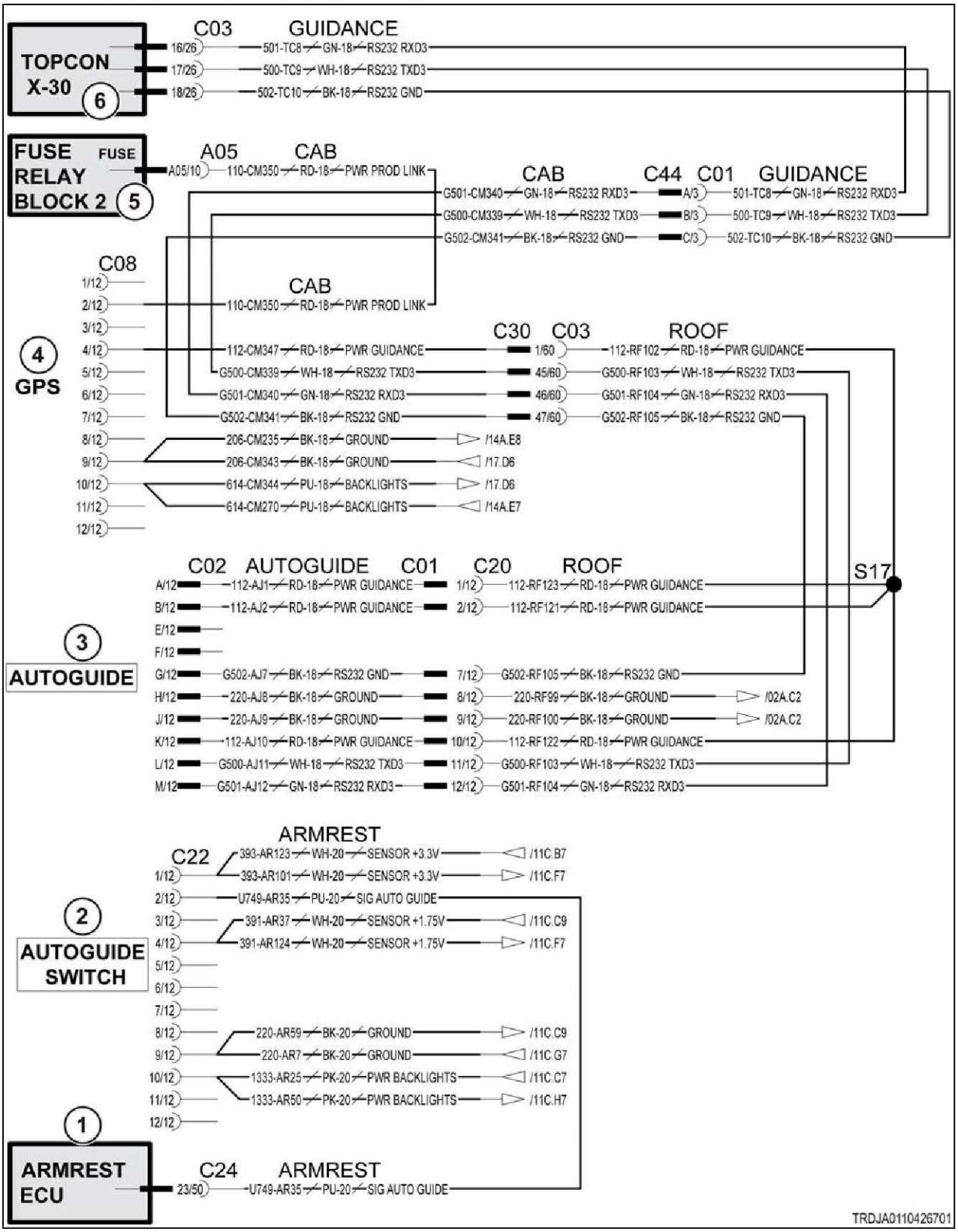

Fig. 531

Schematic legend		
Item	**Schematic term**	**Description**
1	ARMREST ECU	Armrest module
2	AUTOGUIDE SWITCH	Auto-Guide™ switch
3	AUTOGUIDE	Auto-Guide™
4	GPS	Global positioning system
5	FUSE RELAY BLOCK 2	Fuse relay block 2
6	TOPCON X-30	Topcon
--	PWR BACKLIGHTS	Power to rear lamps
--	PWR GUIDANCE	Power to guidance
--	PWR PROD LINK	Power to product link
--	SIG AUTOGUIDE	Signal Auto-Guide™

1.7v and 3.3v schematics

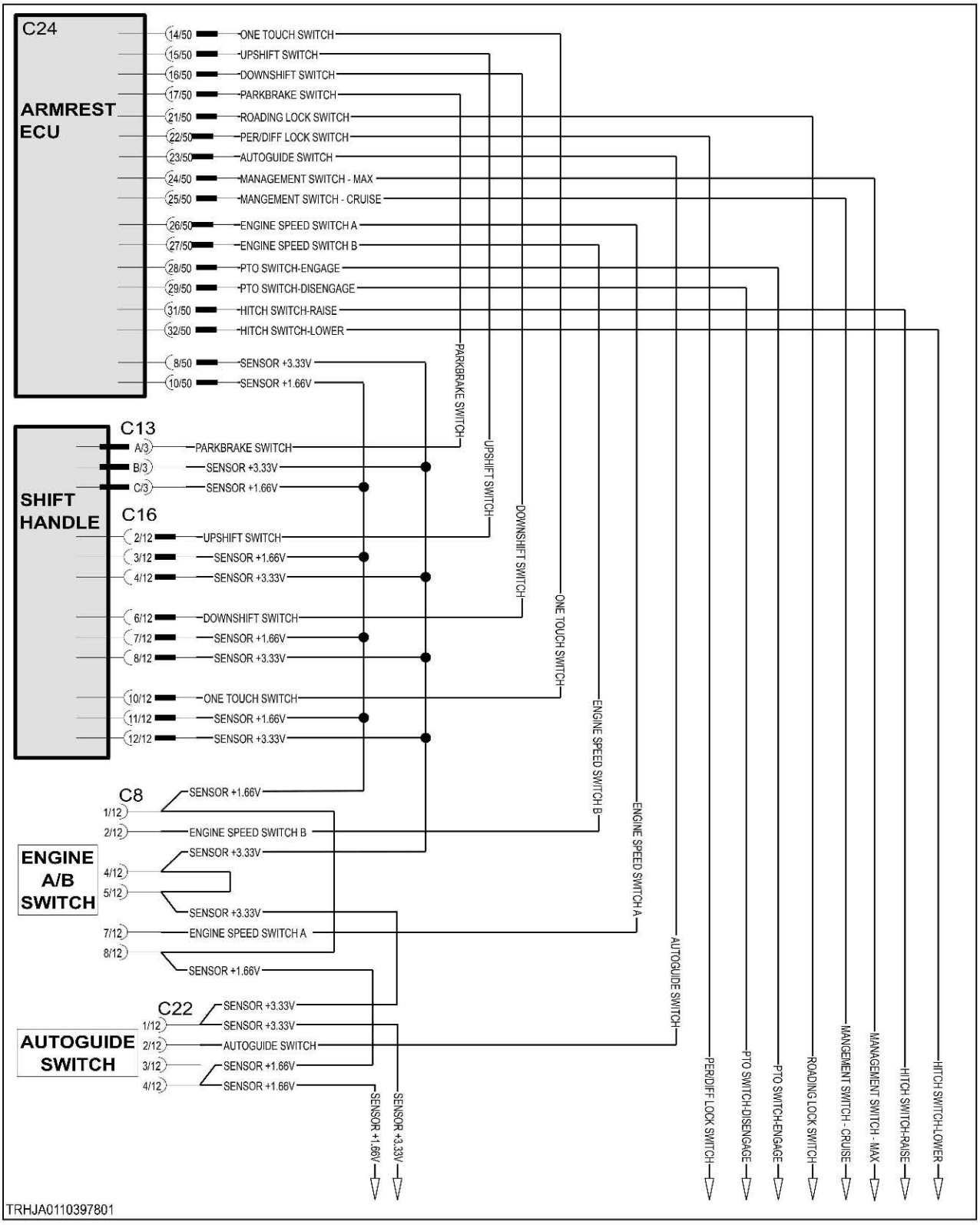

Fig. 532

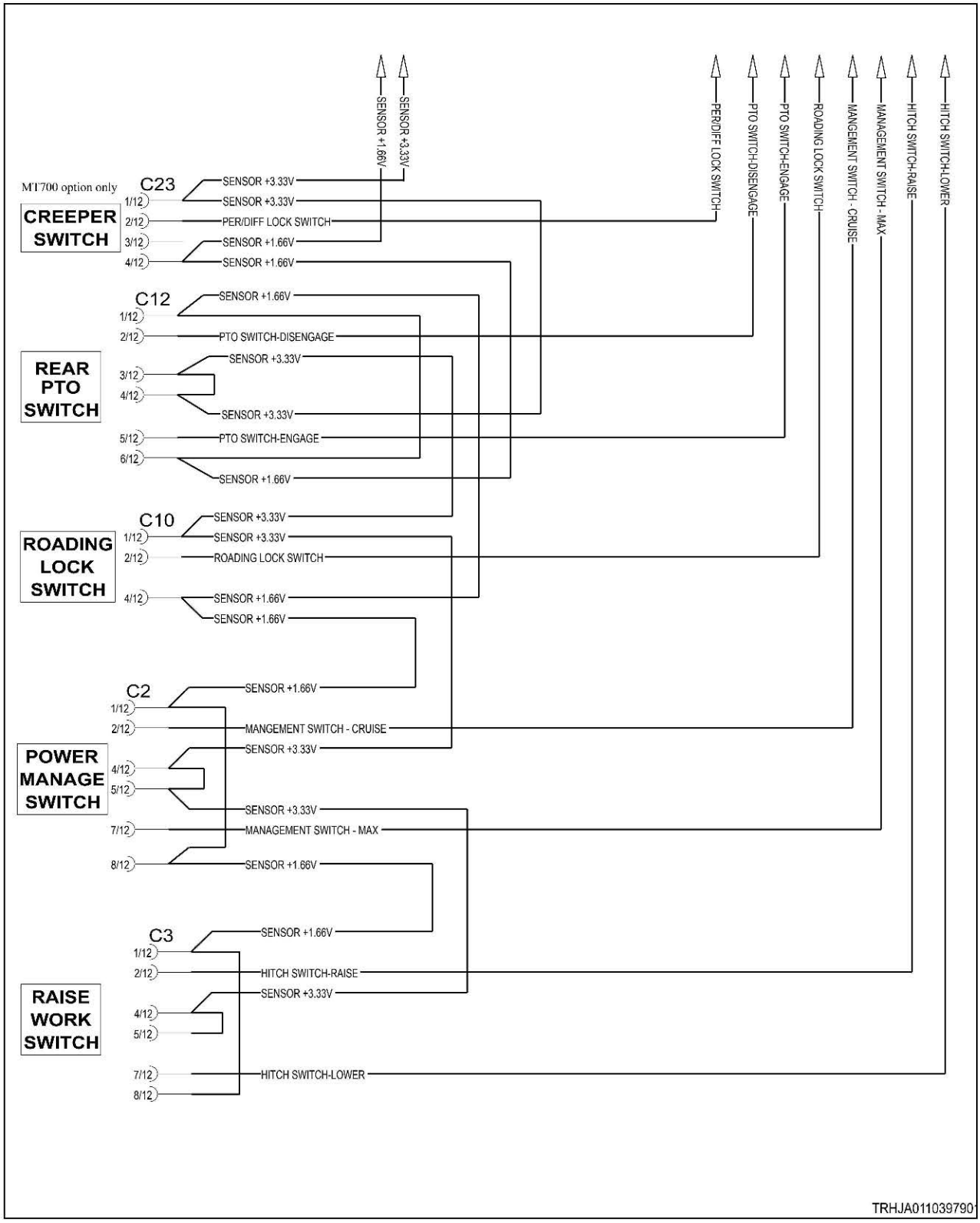
SENSOR +1.66V
SENSOR +3.33V
PER/DIFF LOCK SWITCH
PTO SWITCH-DISENGAGE
PTO SWITCH-ENGAGE
ROADING LOCK SWITCH
MANGEMENT SWITCH - CRUISE
MANAGEMENT SWITCH - MAX
HITCH SWITCH-RAISE
HITCH SWITCH-LOWER
MT700 option only
CREEPER SWITCH
C23
1/12 SENSOR +3.33V
SENSOR +3.33V
2/12 PER/DIFF LOCK SWITCH
3/12 SENSOR +1.66V
4/12 SENSOR +1.66V
C12
1/12 SENSOR +1.66V
2/12 PTO SWITCH-DISENGAGE
REAR PTO SWITCH
3/12 SENSOR +3.33V
4/12
SENSOR +3.33V
5/12 PTO SWITCH-ENGAGE
6/12
SENSOR +1.66V
C10
1/12 SENSOR +3.33V
ROADING LOCK SWITCH
SENSOR +3.33V
2/12 ROADING LOCK SWITCH
4/12 SENSOR +1.66V
SENSOR +1.66V
C2
1/12 SENSOR +1.66V
2/12 MANGEMENT SWITCH - CRUISE
POWER MANAGE SWITCH
SENSOR +3.33V
4/12
5/12
SENSOR +3.33V
7/12 MANAGEMENT SWITCH - MAX
8/12 SENSOR +1.66V
C3
SENSOR +1.66V
1/12
2/12 HITCH SWITCH-RAISE
SENSOR +3.33V
RAISE WORK SWITCH
4/12
5/12
7/12 HITCH SWITCH-LOWER
8/12
TRHJA011039790

Fig. 533

10.7.91.2 Roading lockout switch



Fig. 534 Switch pinout

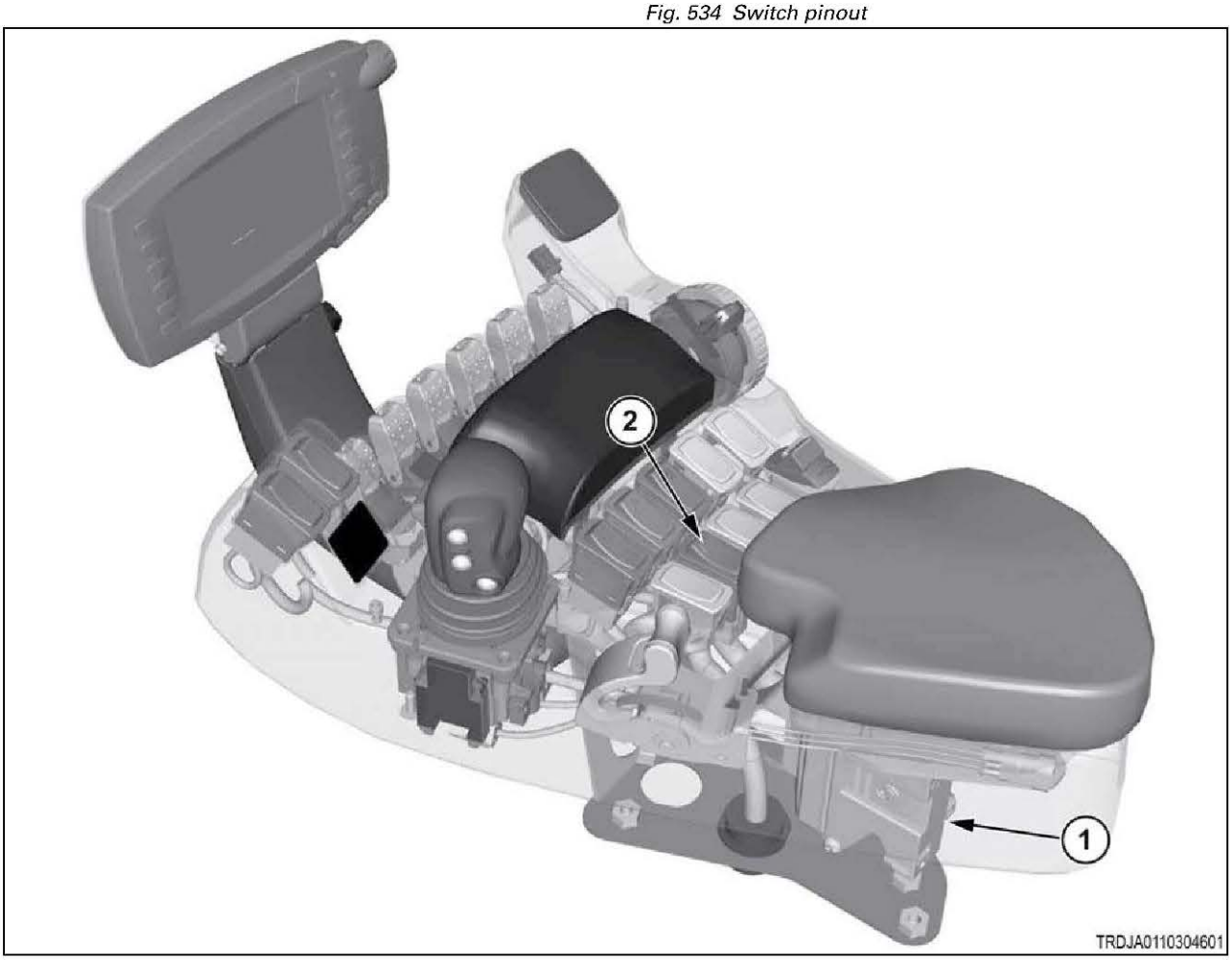

Fig. 535

(1)	Armrest module
(2)	Roading lockout switch

10.7.92 Code SA 05 SPN 520194 FMI 04

The roading lockout switch signal voltage is below normal.

The signal voltage is lower than the 1.66-volt supply. The most likely cause is a short circuit to ground.

The switch is a single-pole, double-throw (SPDT) type switch, except the "common" terminal is the data output instead of a power source. The 2 other contacts are connected to 3.33-volt power and 1.66-volt power. Operating the switch selects one of these voltages for the signal output. This error will likely be accompanied by a power supply error too. This information can be used to isolate the cause.

Diagnosis and solution

1. Determine when this error is reported.

a) Turn the key start switch to the on position.

b) Check for this error code (SA 05 SPN 520194 FMI 04) as you operate the switch between on and off states.

Note that power supply errors will likely also be reported, as noted below.

Result

- The error is reported only when the switch is in the off position.

  Error code SA 05 SPN 3511 FMI 04 (3.33V power) is likely also reported.

  Diagnose the power supply error code first.

  Stop.
- The error is reported only when the switch is in the on position.

  Error code SA 05 SPN 3510 FMI 04 (1.66V power) is likely also reported.

  Diagnose the power supply error code first.

  Stop.
- The error is reported regardless of switch position.

  The signal wire is shorted to ground.

  Repair or replace the harness.

  See step 2 to validate the repair.

2. Check if the fault code remains.

a) Inspect and clean the harness connector contacts.

b) Connect all the connectors.

c) Turn the battery disconnect switch to the on position.

d) Turn the key start switch to the on position.

e) Operate the machine at low idle.

f) Check if the fault code remains.

Result

- SPN 520194 FMI 04 is not active.

  Stop.
- SPN 520194 FMI 04 is active.

  Failure of the armrest module is possible but not common. Exit the procedure and do the procedure again. If the fault code remains active, replace the armrest module.

  Stop.

10.7.92.1 Auto-Guide™ switch electrical schematic

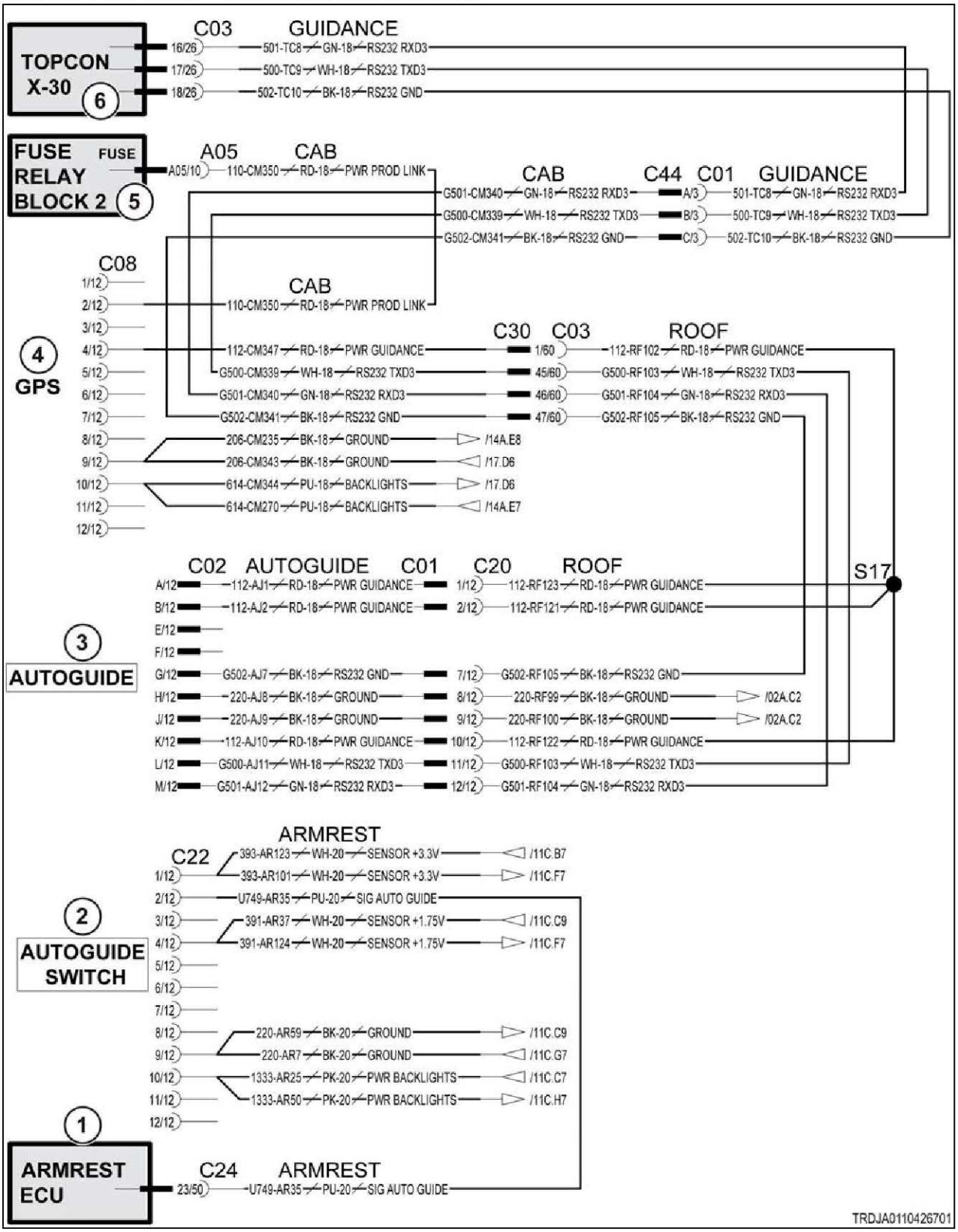

Fig. 536

Schematic legend		
Item	**Schematic term**	**Description**
1	ARMREST ECU	Armrest module
2	AUTOGUIDE SWITCH	Auto-Guide™ switch
3	AUTOGUIDE	Auto-Guide™
4	GPS	Global positioning system
5	FUSE RELAY BLOCK 2	Fuse relay block 2
6	TOPCON X-30	Topcon
--	PWR BACKLIGHTS	Power to rear lamps
--	PWR GUIDANCE	Power to guidance
--	PWR PROD LINK	Power to product link
--	SIG AUTOGUIDE	Signal Auto-Guide™

1.7v and 3.3v schematics

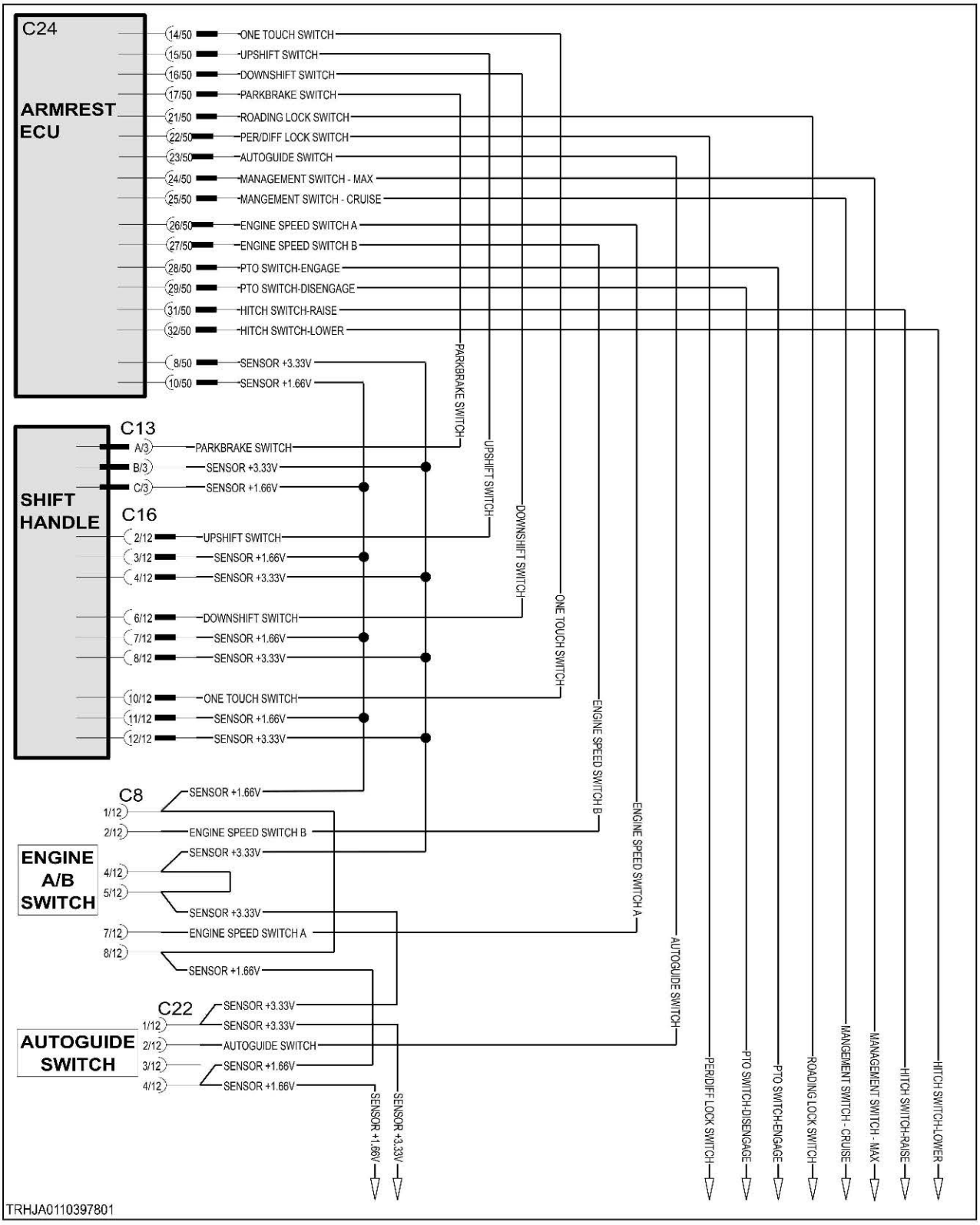

Fig. 537

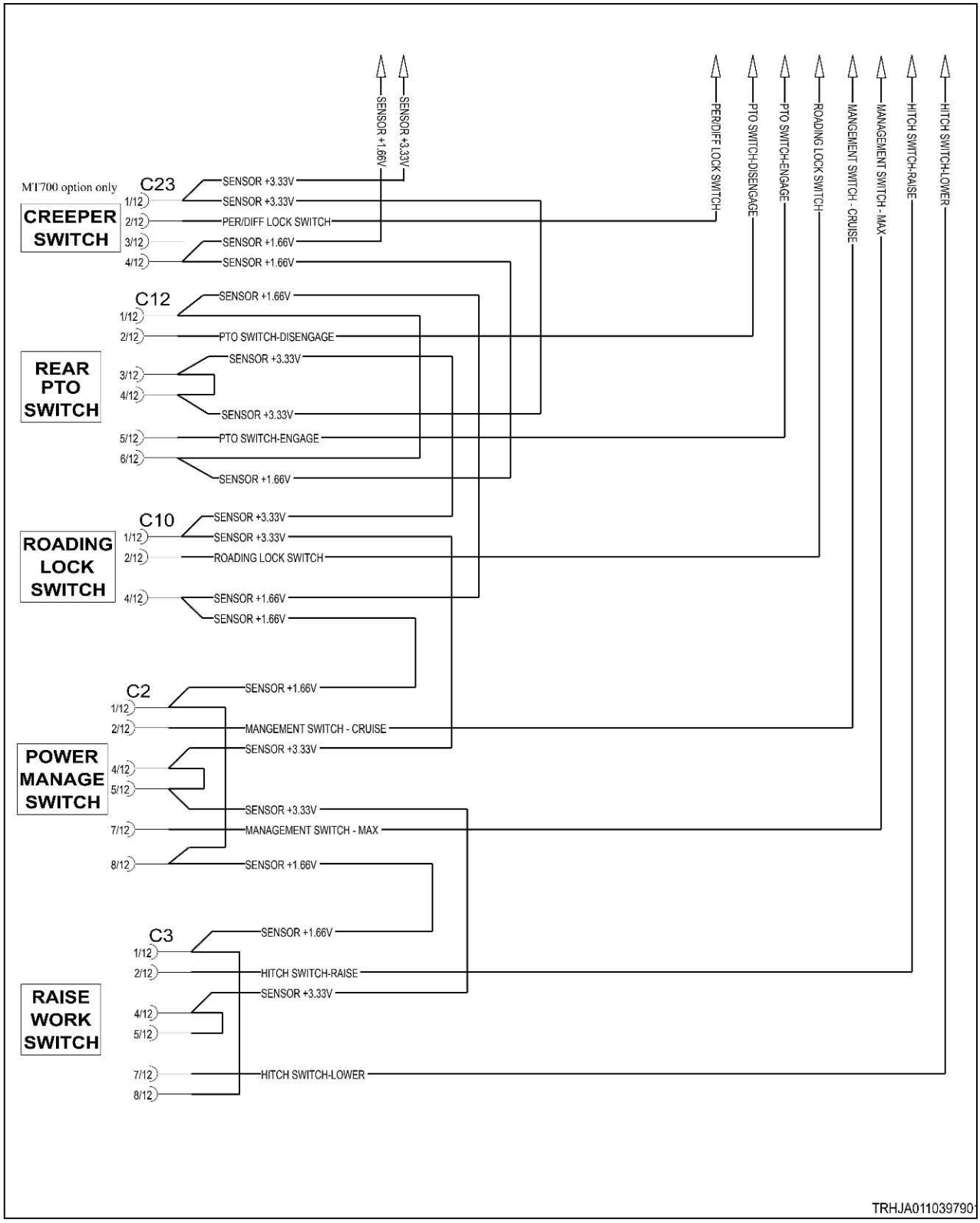
SENSOR +1.66V
SENSOR +3.33V
PER/DIFF LOCK SWITCH
PTO SWITCH-DISENGAGE
PTO SWITCH-ENGAGE
ROADING LOCK SWITCH
MANGEMENT SWITCH - CRUISE
MANAGEMENT SWITCH - MAX
HITCH SWITCH-RAISE
HITCH SWITCH-LOWER
MT700 option only
CREEPER SWITCH
C23
1/12 SENSOR +3.33V
2/12 PER/DIFF LOCK SWITCH
3/12 SENSOR +1.66V
4/12 SENSOR +1.66V
REAR PTO SWITCH
C12
1/12 SENSOR +1.66V
2/12 PTO SWITCH-DISENGAGE
3/12 SENSOR +3.33V
4/12
SENSOR +3.33V
5/12 PTO SWITCH-ENGAGE
6/12
SENSOR +1.66V
ROADING LOCK SWITCH
C10
1/12 SENSOR +3.33V
SENSOR +3.33V
2/12 ROADING LOCK SWITCH
4/12 SENSOR +1.66V
SENSOR +1.66V
POWER MANAGE SWITCH
C2
1/12 SENSOR +1.66V
2/12 MANGEMENT SWITCH - CRUISE
SENSOR +3.33V
4/12
5/12
SENSOR +3.33V
7/12 MANAGEMENT SWITCH - MAX
8/12 SENSOR +1.66V
RAISE WORK SWITCH
C3
1/12 SENSOR +1.66V
2/12 HITCH SWITCH-RAISE
SENSOR +3.33V
4/12
5/12
7/12 HITCH SWITCH-LOWER
8/12
TRHJA011039790

Fig. 538

10.7.92.2 Roading lockout switch



Fig. 539 Switch pinout

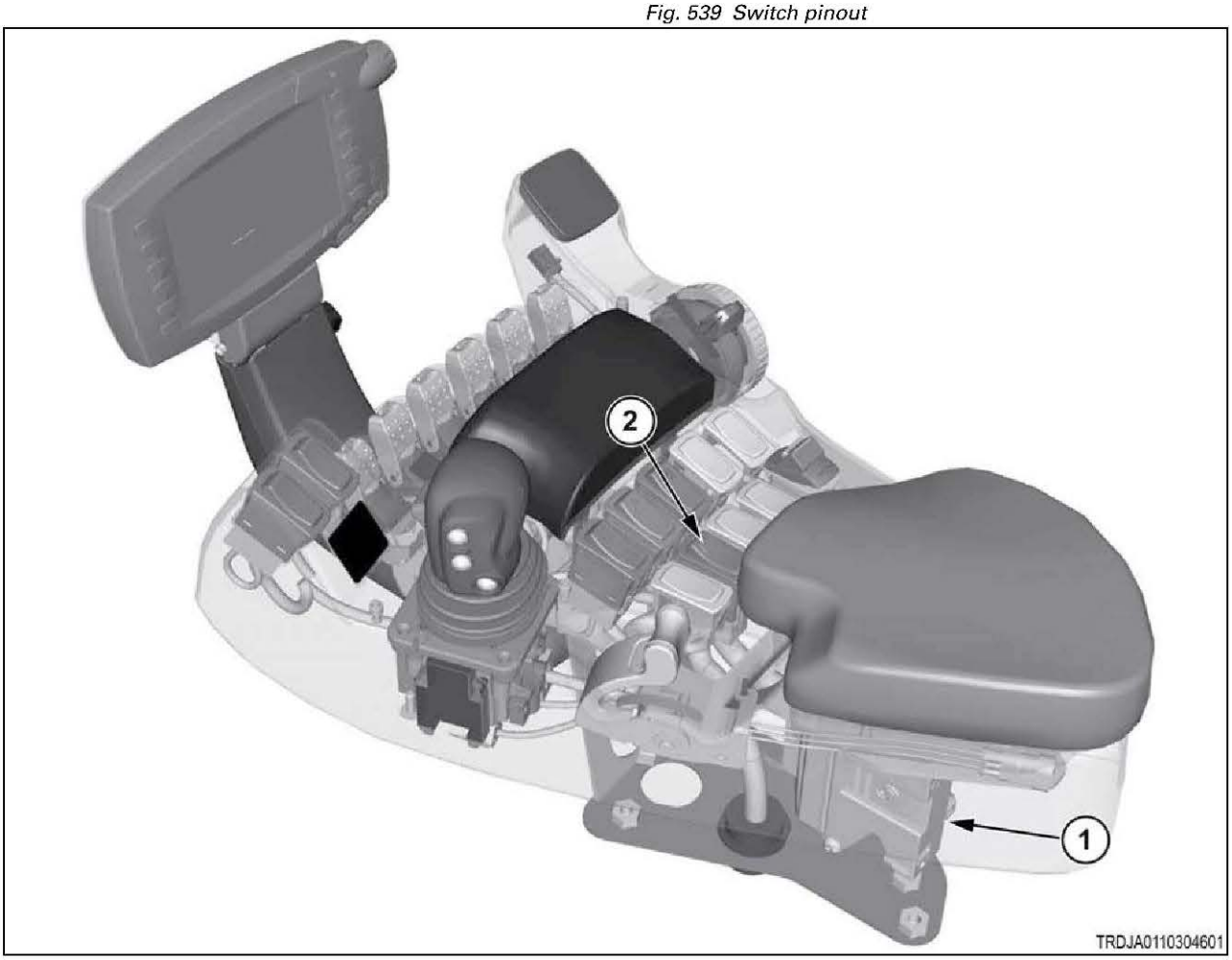

Fig. 540

(1)	Armrest module
(2)	Roading lockout switch

10.7.93 Code SA 05 SPN 520194 FMI 05

Open circuit in the roading lockout switch circuit.

The switch is a single-pole, double-throw (SPDT) type switch, except the "common" terminal is the data output instead of a power source. The 2 other contacts are connected to 3.33-volt power and 1.66-volt power. Operating the switch selects one of these voltages for the signal output. These 2 power circuits are shared by several other function switches on the armrest. This knowledge can aid in diagnosing the fault.

Diagnosis and solution

1. Determine when this error is reported.

a) Turn the key start switch to the on position.

b) Check whether the error code is reported as you operate the switch between on and off states.

Result

- The error is reported only when the switch is in the off position.

  The open circuit is in the 3.33V power circuit.

  See step 2 to isolate the location.
- The error is reported only when the switch is in the on position.

  The open circuit is in the 1.66V power circuit.

  See step 2 to isolate the location.
- The error is reported regardless of switch position.

  The open circuit is in the signal circuit.

  Repair or replace the armrest harness.

  See step 3 to validate the repair.

2. Isolate the power circuit open circuit.

a) Operate all upstream (and at least one downstream) armrest switches, according to the list below, from their off to on positions.

Electrical sequence of switches, starting from the armrest module.

1. Shift Handle (3 pushbuttons)
2. Engine A/B switch
3. Autoguide switch
4. Creeper switch
5. Rear PTO
6. Roading Lock switch
7. Power management (cruise/full) switch
8. Hitch Raise/Work switch

b) Observe which other switches (if any) exhibit similar open circuit error codes.

Result

- At least one upstream switch reported a similar error.

  The open circuit lies at, or just upstream from, that switch.

  Repair or replace the armrest harness.

  See step 3 to validate the repair.

- Only downstream switches reported similar errors.

  The harness is open circuited at this switch location.

  Repair or replace the harness.

  See step 3 to validate the repair.
- No other switches reported similar errors.

  The switch is at fault.

  Replace the switch.

  See step 3 to validate the repair.

3. Check if the fault code remains.

a) Inspect and clean the harness connector contacts.
b) Connect all the connectors.
c) Turn the battery disconnect switch to the on position.
d) Turn the key start switch to the on position.
e) Operate the machine at low idle.
f) Check if the fault code remains.

Result

- SPN 520194 FMI 05 is not active.

  Stop.
- SPN 520194 FMI 05 is active.

  Failure of the armrest module is possible but not common. Exit the procedure and do the procedure again. If the fault code remains active, replace the armrest module.

  Stop.

10.7.93.1 Auto-Guide™ switch electrical schematic

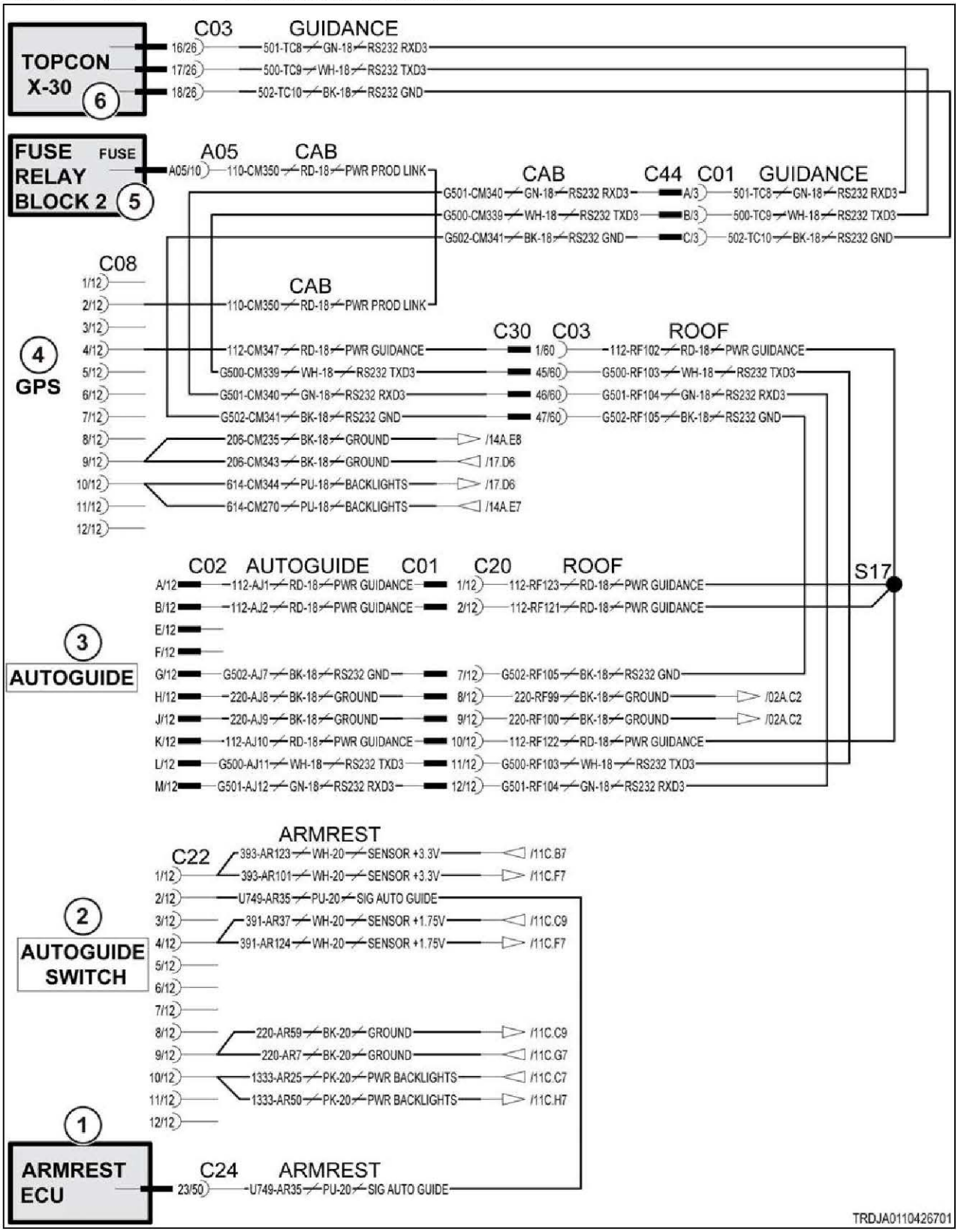

Fig. 541

Schematic legend		
Item	**Schematic term**	**Description**
1	ARMREST ECU	Armrest module
2	AUTOGUIDE SWITCH	Auto-Guide™ switch
3	AUTOGUIDE	Auto-Guide™
4	GPS	Global positioning system
5	FUSE RELAY BLOCK 2	Fuse relay block 2
6	TOPCON X-30	Topcon
--	PWR BACKLIGHTS	Power to rear lamps
--	PWR GUIDANCE	Power to guidance
--	PWR PROD LINK	Power to product link
--	SIG AUTOGUIDE	Signal Auto-Guide™

1.7v and 3.3v schematics

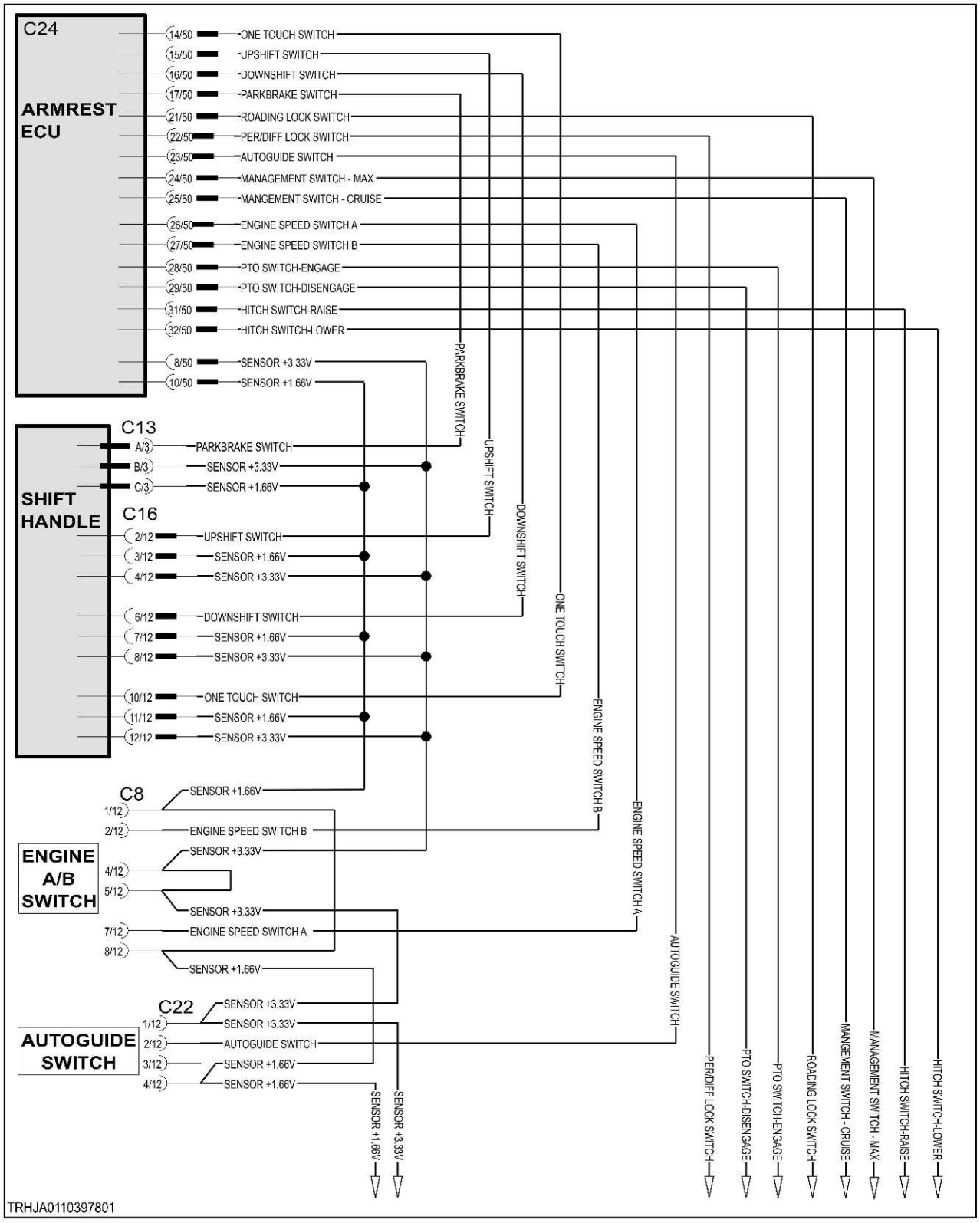

Fig. 542

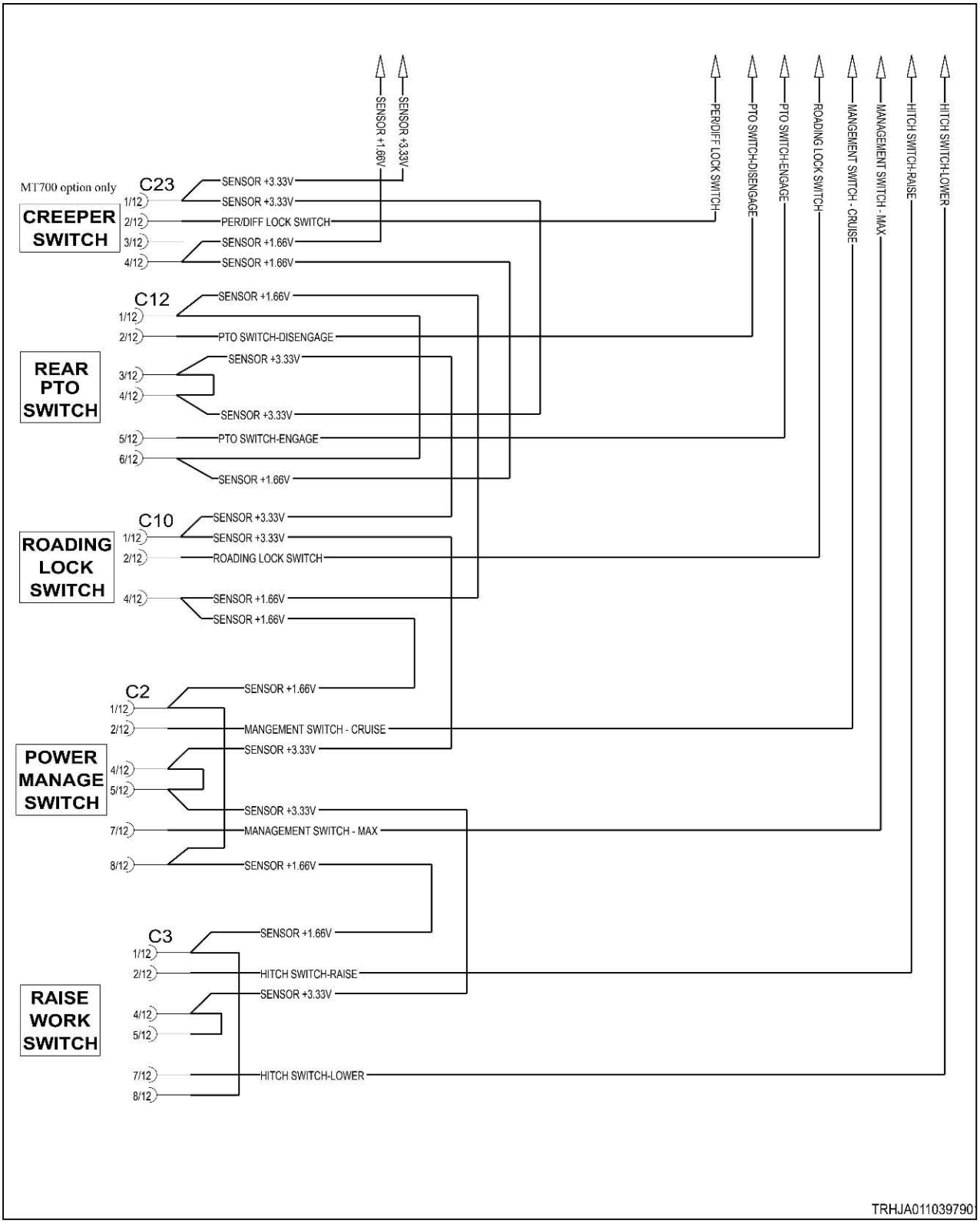
SENSOR +1.66V
SENSOR +3.33V
PER/DIFF LOCK SWITCH
PTO SWITCH-DISENGAGE
PTO SWITCH-ENGAGE
ROADING LOCK SWITCH
MANGEMENT SWITCH - CRUISE
MANAGEMENT SWITCH - MAX
HITCH SWITCH-RAISE
HITCH SWITCH-LOWER
MT700 option only
CREEPER SWITCH
C23
1/12 SENSOR +3.33V
2/12 SENSOR +3.33V
3/12 PER/DIFF LOCK SWITCH
4/12 SENSOR +1.66V
SENSOR +1.66V
C12
1/12 SENSOR +1.66V
2/12 PTO SWITCH-DISENGAGE
REAR PTO SWITCH
3/12 SENSOR +3.33V
4/12
SENSOR +3.33V
5/12 PTO SWITCH-ENGAGE
6/12
SENSOR +1.66V
C10
ROADING LOCK SWITCH
1/12 SENSOR +3.33V
SENSOR +3.33V
2/12 ROADING LOCK SWITCH
4/12 SENSOR +1.66V
SENSOR +1.66V
C2
1/12 SENSOR +1.66V
2/12 MANGEMENT SWITCH - CRUISE
POWER MANAGE SWITCH
SENSOR +3.33V
4/12
5/12
SENSOR +3.33V
7/12 MANAGEMENT SWITCH - MAX
8/12 SENSOR +1.66V
C3
SENSOR +1.66V
1/12
2/12 HITCH SWITCH-RAISE
SENSOR +3.33V
RAISE WORK SWITCH
4/12
5/12
7/12 HITCH SWITCH-LOWER
8/12
TRHJA011039790

Fig. 543

10.7.93.2 Roading lockout switch



Fig. 544 Switch pinout

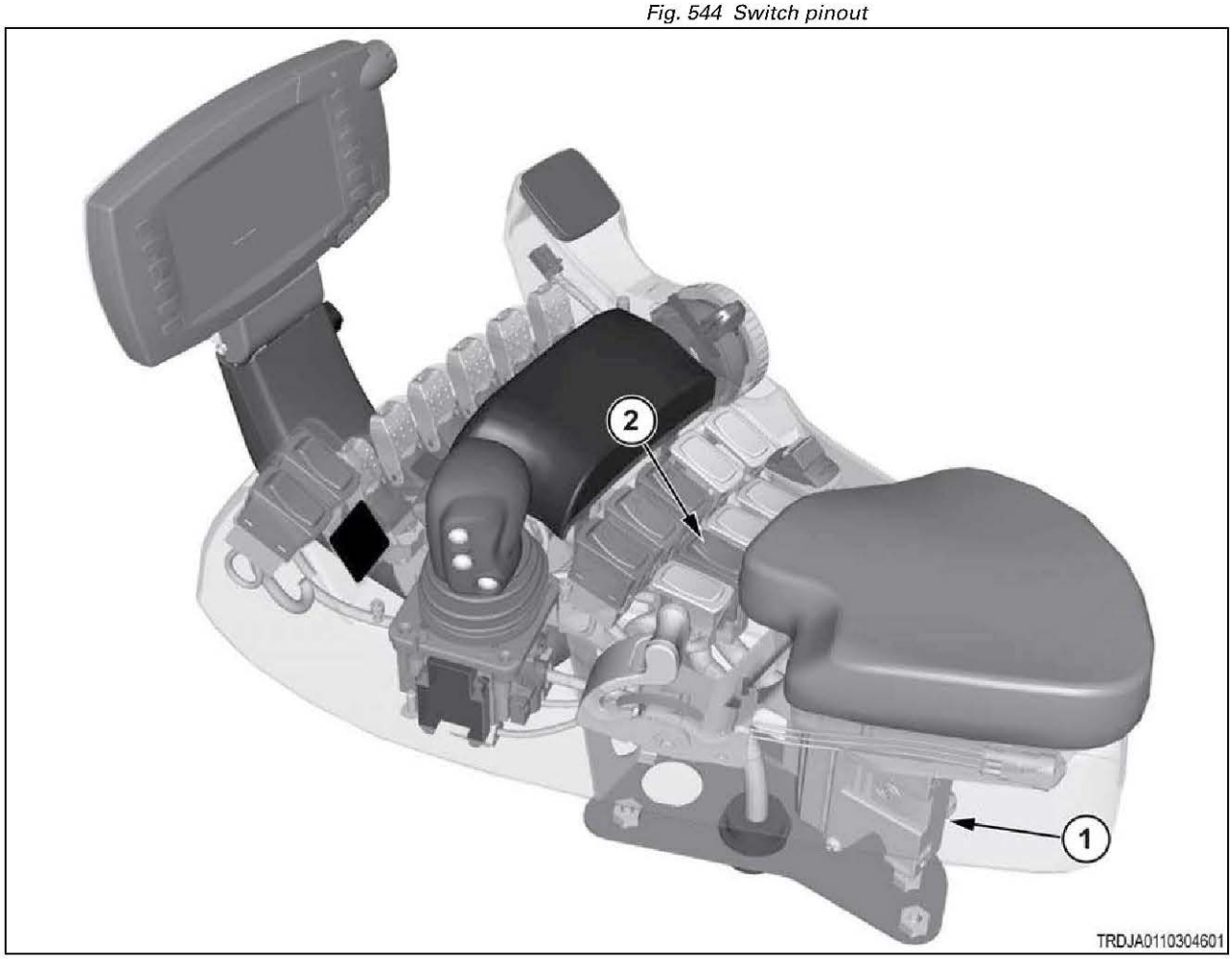

Fig. 545

(1)	Armrest module
(2)	Roading lockout switch

10.7.94 Code SA 05 SPN 520196 FMI 31

There is high track to ground slip while the machine is operating.

Diagnosis and solution

Make sure the machine configuration is correct.

See the operator manual for the radar calibration procedure.

- Make sure the slip alarm set point is correct for machine application.
- Decrease the working load on the machine.

10.7.95 Code SA 05 SPN 520197 FMI 02

The Auto-Guide™ switch signal is erratic, intermittent, or incorrect.

The switch is a single-pole, double-throw (SPDT) type switch, except the "common" terminal is the data output instead of a power source. The 2 other contacts are connected to 3.33-volt power and 1.66-volt power. Operating the switch selects one of these voltages for the signal output. These 2 power circuits are shared by several other function switches on the armrest. This knowledge can aid in diagnosing the fault.

Diagnosis and solution

1. Check the function of upstream and downstream switches that share power circuits.

a) Turn the key start switch to the on position.
b) Operate the engine A/B speed switch in both directions.
c) Operate the creeper switch in both directions.
d) Check for additional error codes.

Result

- SA 05 SPN 2970 FMI 02 or SA 05 SPN 2971 FMI 02 (engine speed) errors are reported.

  Focus further examination on the power circuits between the engine speed switch and the armrest controller.

  See step 2 to check for loose connections.
- SA 05 SPN 69 FMI 02 (creeper) is reported, but not an engine speed error.

  Focus further examination on the power circuits between the auto-guide switch and the engine speed switch.

  See step 2 to check for loose connections.
- No additional error codes are reported.

  The power circuits are not suspect.

  Focus further examination on the switch signal output.

  See step 2 to check for loose connections.

2. Inspect all harness and switch connections.

a) Turn the key start switch to the off position.
b) Turn the battery disconnect switch to the off position.
c) Open the top of the armrest console.
d) Inspect and clean all connectors and connector contacts:

- Look for bent or worn pins.
- Look for deformed or oversized sockets.
- Look for corrosion on the pins and sockets. Corrosion is a sign of a loose connection.
- Look for signs of overheating. Overheating is a sign of a poor connection, and can further loosen the pin or socket mount. The whole connector body should be replaced.

e) Make sure to inspect the circuits identified in step 1 as they pass through the following connector locations:

- Switch signal at the armrest ECU C24-23.
- All contacts at the Auto-Guide™ switch.
- The 1.66V and 3.33V power signals as they pass through the following switches:

  Auto-Guide™ switch

  Engine A/B switch

  Shift Handle

  Armrest ECU C24-8 (3.33V) and C24-10 (1.66V)

f) Repair or replace any connector or harness found faulty.

Result

- No faulty contacts were found.

  See step 3 to check the switch function.
- Faulty contacts were found and repaired.

  See step 4 to validate the repair.

3. Check the switch function.

a) Disconnect the auto-guide switch.

b) Check resistance between contacts 2 & 1 and 2 & 4, as you operate the switch from on and off.

- In the on-position, contacts 2 and 4 should have continuity.
- In the off-position, contacts 2 and 1 should have continuity.

Result

- Continuity checks are correct.

  See step 4 to check if the error persists.
- Continuity checks are incorrect.

  Replace the switch.

  See step 4 to validate the repair.

4. Check if the fault code remains.

a) Inspect and clean the harness connector contacts.

b) Connect all the connectors.

c) Turn the battery disconnect switch to the on position.

d) Turn the key start switch to the on position.

e) Operate the machine at low idle.

f) Check if the fault code remains.

Result

- SPN 520197 FMI 02 is not active.

  Stop.
- SPN 520197 FMI 02 is active.

  Failure of the armrest module is possible but not common. Exit the procedure and do the procedure again. If the fault code remains active, replace the armrest module.

  Stop.

10.7.95.1 Auto-Guide™ switch electrical schematic

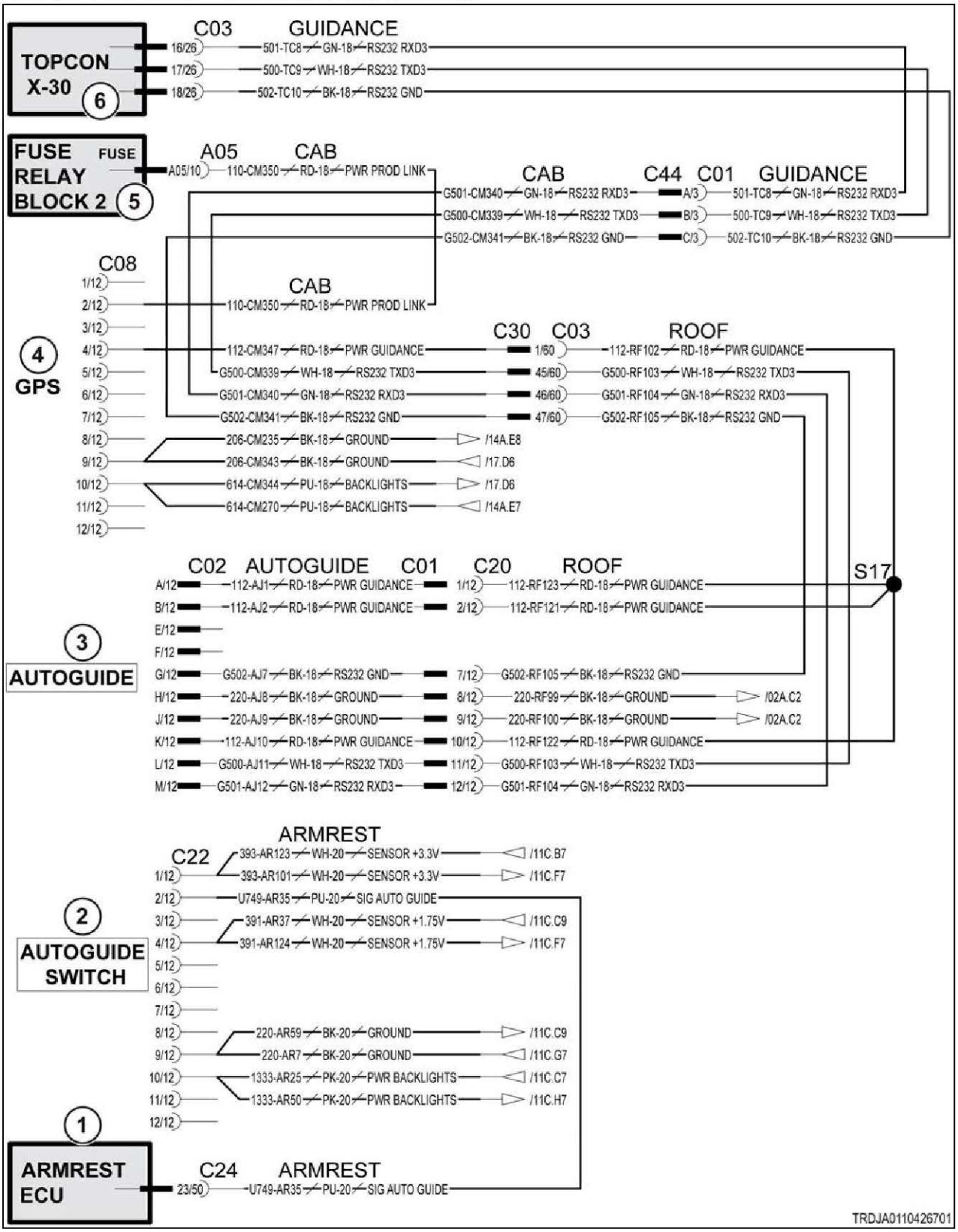

Fig. 546

Schematic legend		
Item	**Schematic term**	**Description**
1	ARMREST ECU	Armrest module
2	AUTOGUIDE SWITCH	Auto-Guide™ switch
3	AUTOGUIDE	Auto-Guide™
4	GPS	Global positioning system
5	FUSE RELAY BLOCK 2	Fuse relay block 2
6	TOPCON X-30	Topcon
--	PWR BACKLIGHTS	Power to rear lamps
--	PWR GUIDANCE	Power to guidance
--	PWR PROD LINK	Power to product link
--	SIG AUTOGUIDE	Signal Auto-Guide

1.7v and 3.3v schematics

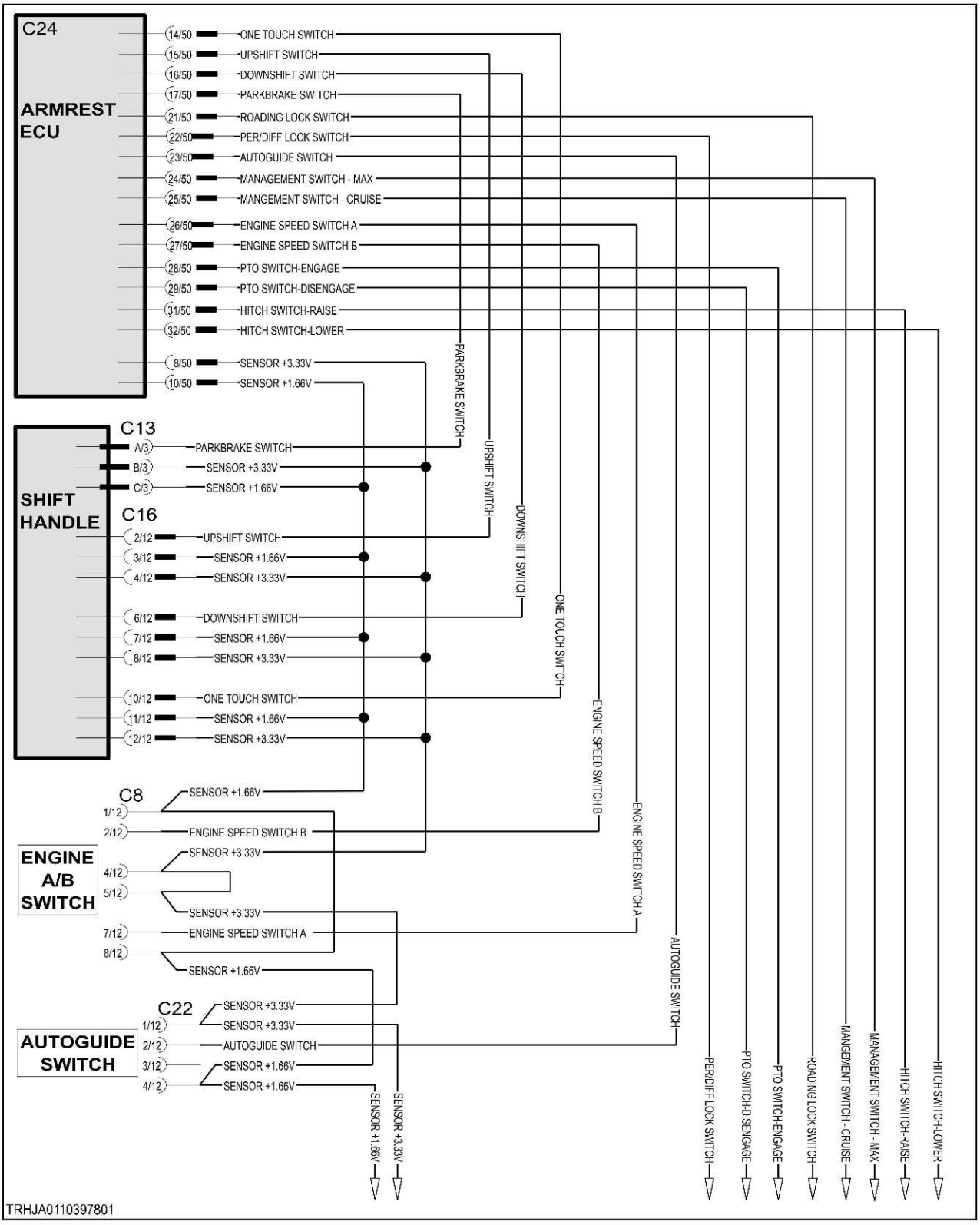

Fig. 547

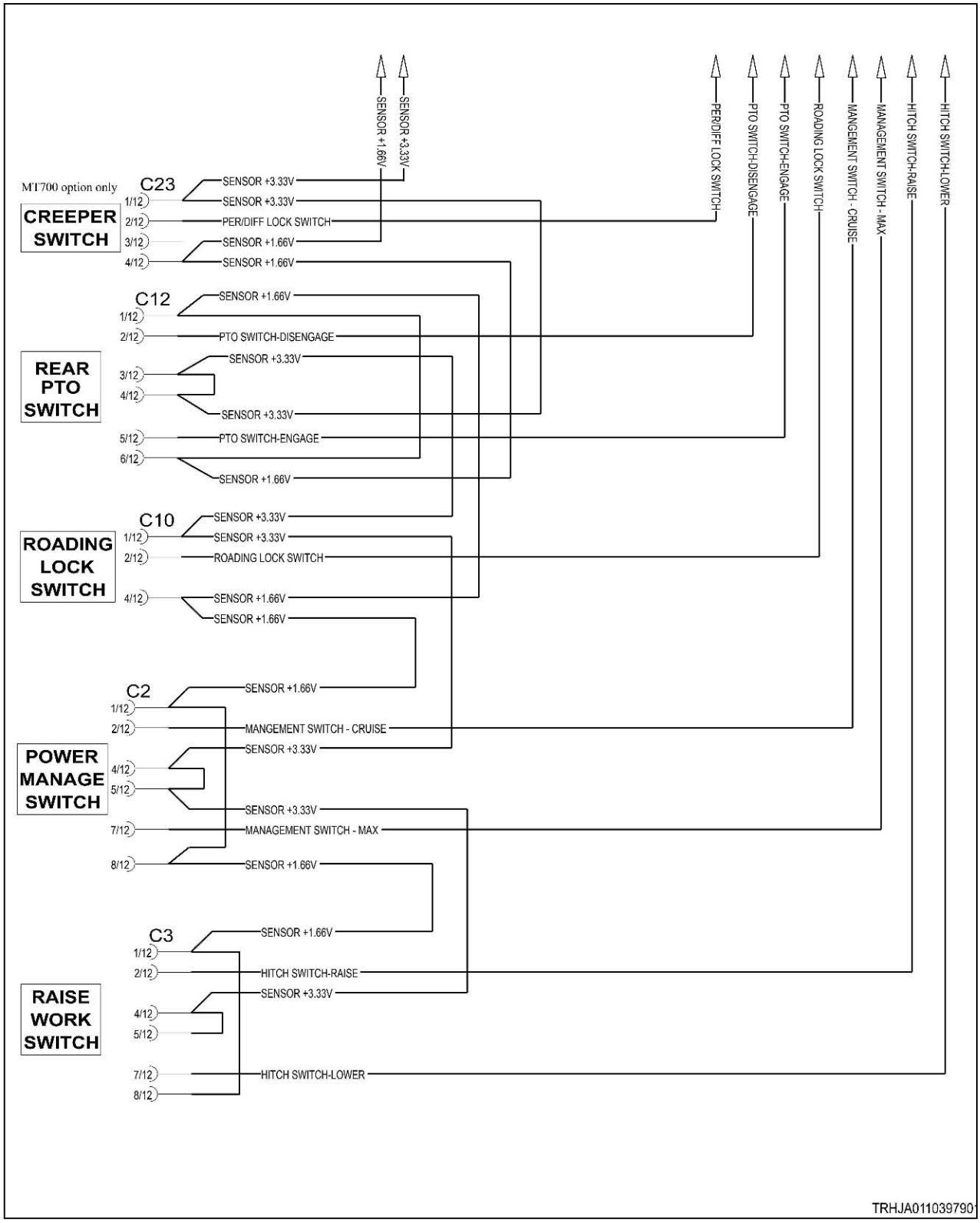
SENSOR +1.66V
SENSOR +3.33V
PER/DIFF LOCK SWITCH
PTO SWITCH-DISENGAGE
PTO SWITCH-ENGAGE
ROADING LOCK SWITCH
MANGEMENT SWITCH - CRUISE
MANAGEMENT SWITCH - MAX
HITCH SWITCH-RAISE
HITCH SWITCH-LOWER
MT700 option only
CREEPER SWITCH
C23
1/12 SENSOR +3.33V
SENSOR +3.33V
2/12 PER/DIFF LOCK SWITCH
3/12 SENSOR +1.66V
4/12 SENSOR +1.66V
C12
1/12 SENSOR +1.66V
2/12 PTO SWITCH-DISENGAGE
REAR PTO SWITCH
3/12 SENSOR +3.33V
4/12
SENSOR +3.33V
5/12 PTO SWITCH-ENGAGE
6/12
SENSOR +1.66V
C10
ROADING LOCK SWITCH
1/12 SENSOR +3.33V
SENSOR +3.33V
2/12 ROADING LOCK SWITCH
4/12 SENSOR +1.66V
SENSOR +1.66V
C2
1/12 SENSOR +1.66V
2/12 MANGEMENT SWITCH - CRUISE
POWER MANAGE SWITCH
SENSOR +3.33V
4/12
5/12
SENSOR +3.33V
7/12 MANAGEMENT SWITCH - MAX
8/12 SENSOR +1.66V
C3
SENSOR +1.66V
1/12
2/12 HITCH SWITCH-RAISE
SENSOR +3.33V
RAISE WORK SWITCH
4/12
5/12
7/12 HITCH SWITCH-LOWER
8/12
TRHJA011039790

Fig. 548

10.7.95.2 Auto-Guide™ engage switch



Fig. 549 Switch pinout

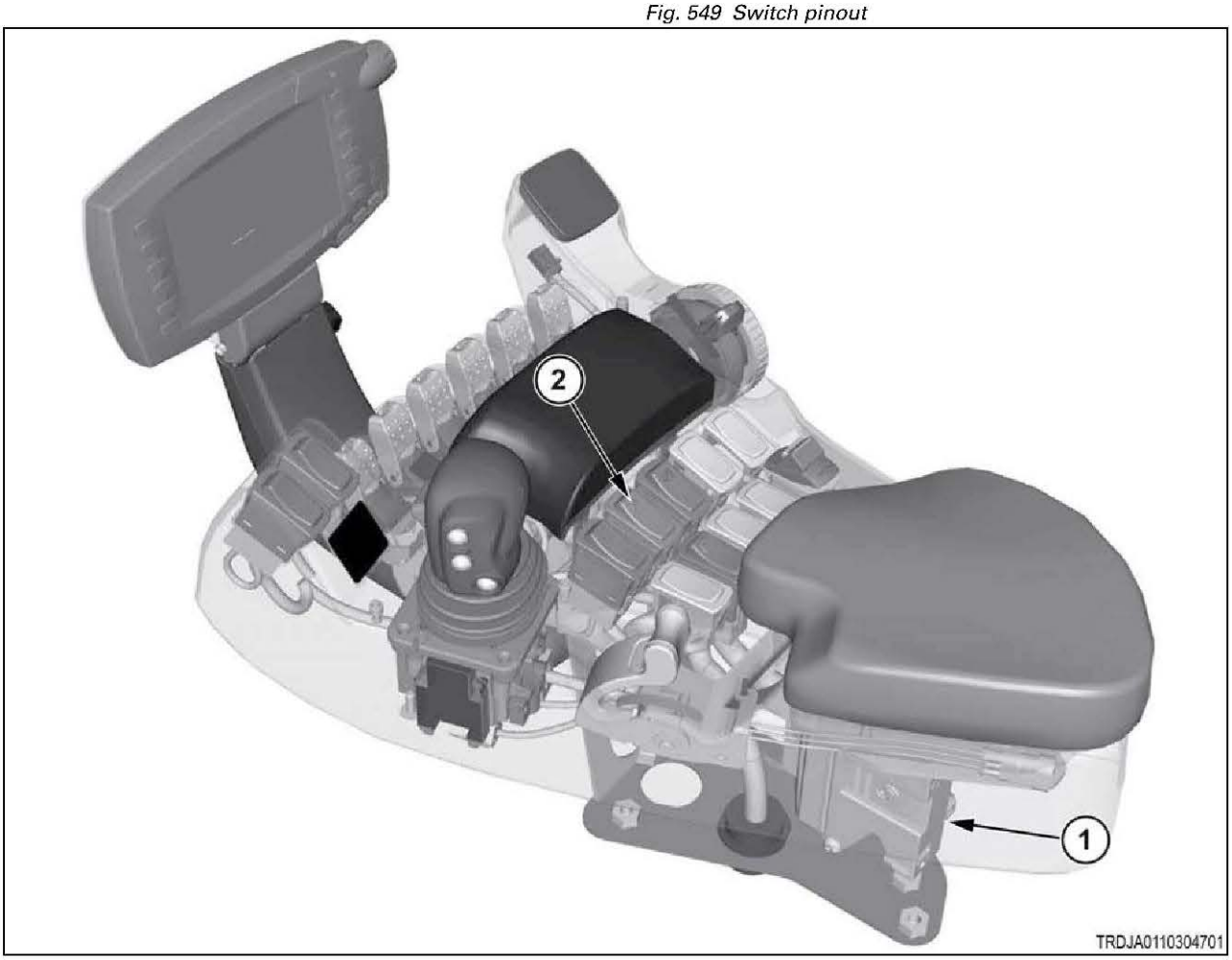

Fig. 550

(1)	Armrest module
(2)	Auto-Guide™ engage switch

10.7.96 Code SA 05 SPN 520197 FMI 03

The Auto-Guide™ engage switch signal voltage is above normal.

The signal voltage is higher than the 3.33-volt supply. The most likely cause is a short circuit to a higher voltage circuit.

The switch is a single-pole, double-throw (SPDT) type switch, except the "common" terminal is the data output instead of a power source. The 2 other contacts are connected to 3.33-volt power and 1.66-volt power. Operating the switch selects one of these voltages for the signal output. This error will likely be accompanied by a power supply error too. This information can be used to isolate the cause.

Diagnosis and solution

1. Determine when this error is reported.

a) Turn the key start switch to the on position.

b) Check for this error code (SA 05 SPN 520197 FMI 03) as you operate the switch between on and off states.

Note that power supply errors will likely also be reported, as noted below.

Result

- The error is reported only when the switch is in the off position.

  Error code SA 05 SPN 3511 FMI 03 (3.33V power) is likely also reported.

  Diagnose the power supply error code first.

  Stop.
- The error is reported only when the switch is in the on position.

  Error code SA 05 SPN 3510 FMI 03 (1.66V power) is likely also reported.

  Diagnose the power supply error code first.

  Stop.
- The error is reported regardless of switch position.

  The signal wire is shorted to some voltage source.

  Repair or replace the harness.

  See step 2 to validate the repair.

2. Check if the fault code remains.

a) Inspect and clean the harness connector contacts.

b) Connect all the connectors.

c) Turn the battery disconnect switch to the on position.

d) Turn the key start switch to the on position.

e) Operate the machine at low idle.

f) Check if the fault code remains.

Result

- SPN 520197 FMI 03 is not active.

  Stop.
- SPN 52197 FMI 03 is active.

  Failure of the armrest module is possible but not common. Exit the procedure and do the procedure again. If the fault code remains active, replace the armrest module.

  Stop.

10.7.96.1 Auto-Guide™ switch electrical schematic

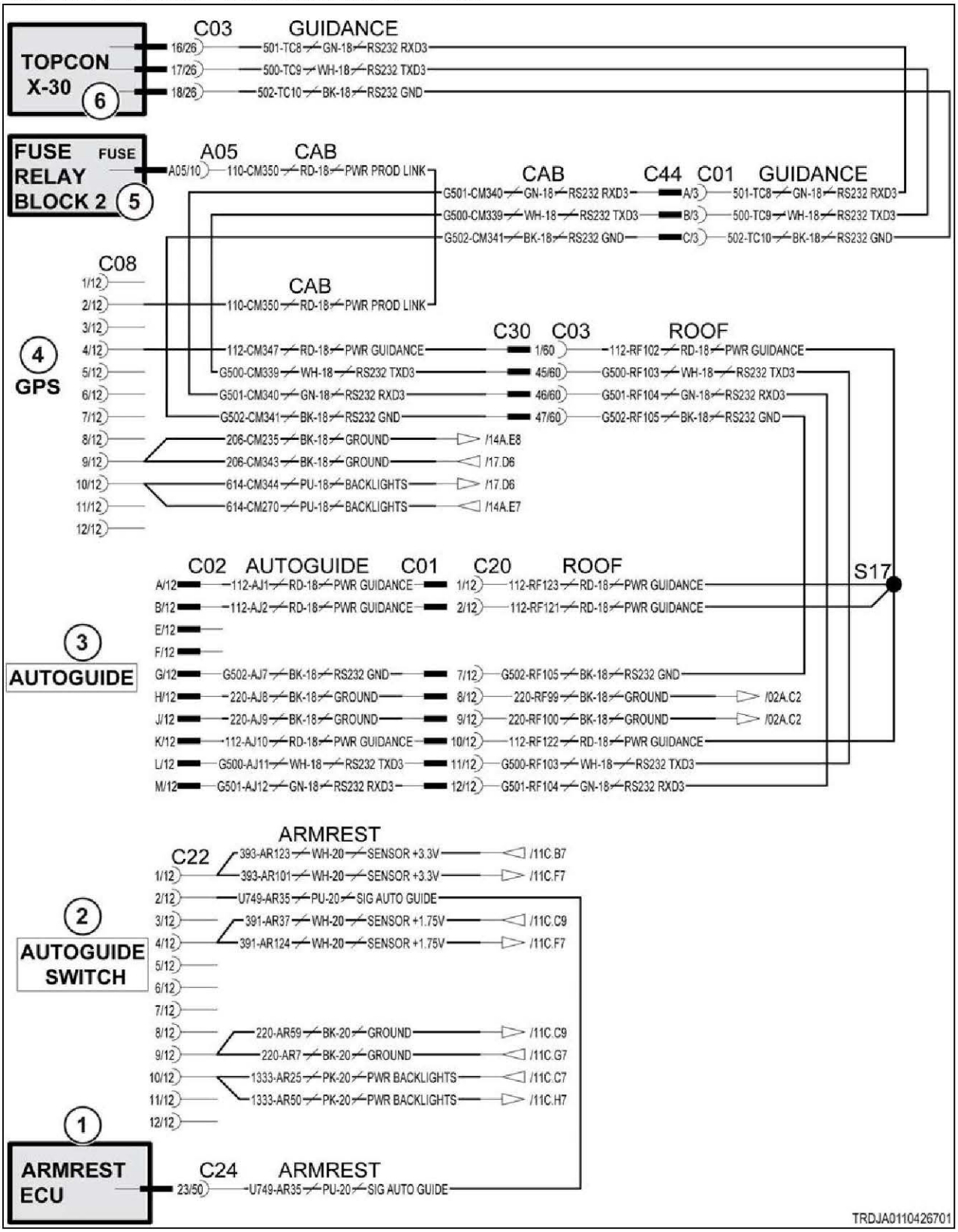

Fig. 551

Schematic legend		
Item	**Schematic term**	**Description**
1	ARMREST ECU	Armrest module
2	AUTOGUIDE SWITCH	Auto-Guide™ switch
3	AUTOGUIDE	Auto-Guide™
4	GPS	Global positioning system
5	FUSE RELAY BLOCK 2	Fuse relay block 2
6	TOPCON X-30	Topcon
--	PWR BACKLIGHTS	Power to rear lamps
--	PWR GUIDANCE	Power to guidance
--	PWR PROD LINK	Power to product link
--	SIG AUTOGUIDE	Signal Auto-Guide

1.7v and 3.3v schematics

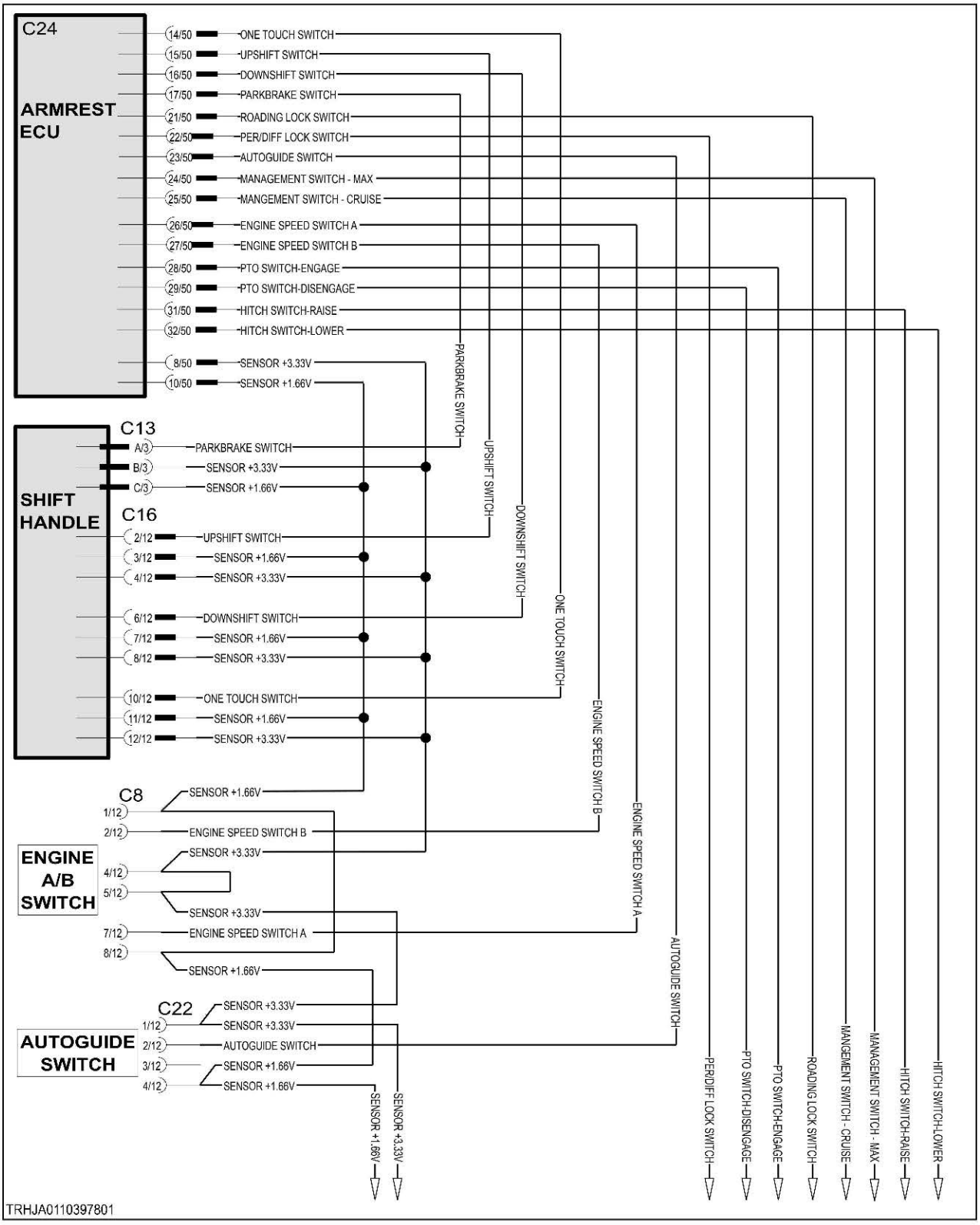

Fig. 552

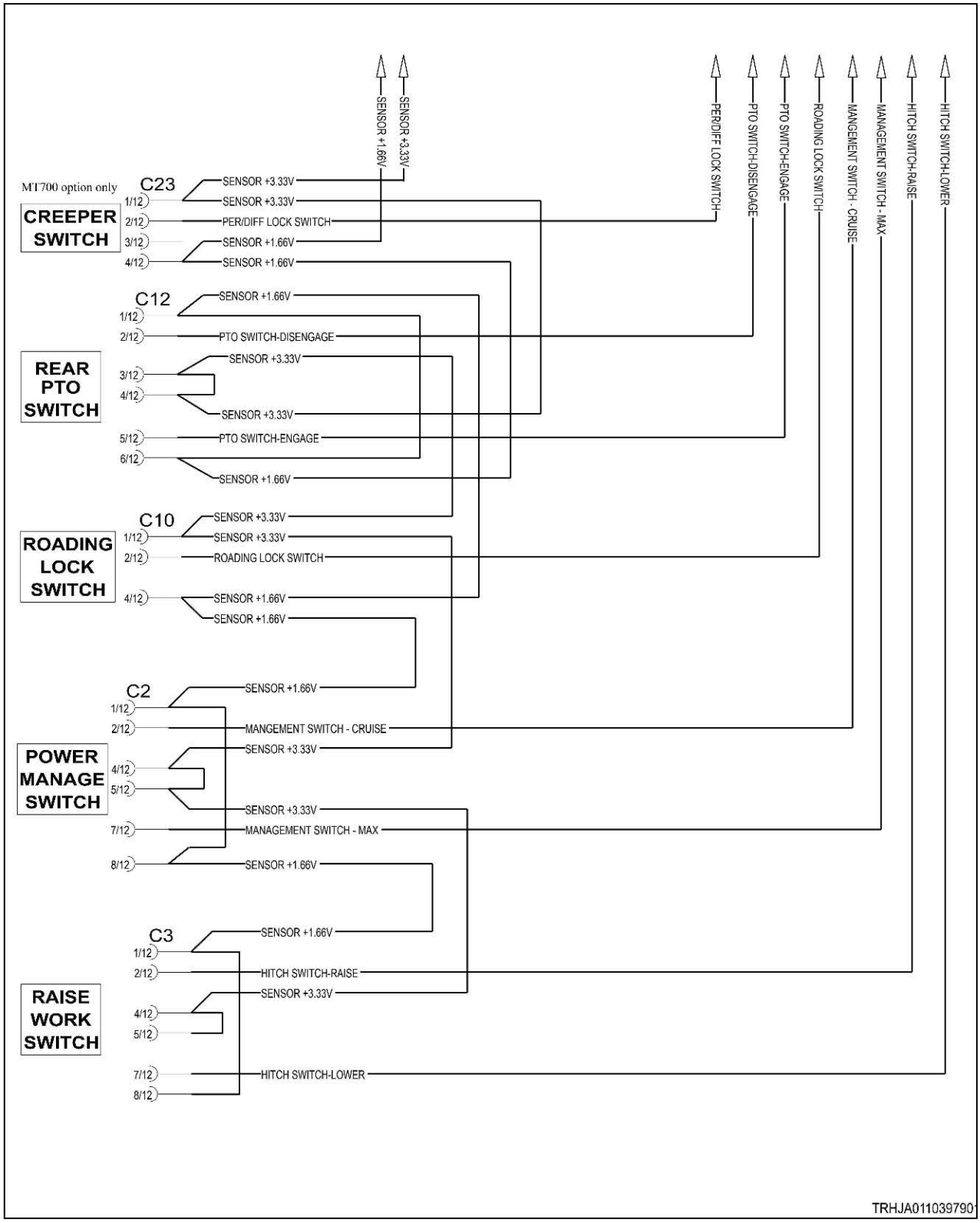
SENSOR +1.66V
SENSOR +3.33V
PER/DIFF LOCK SWITCH
PTO SWITCH-DISENGAGE
PTO SWITCH-ENGAGE
ROADING LOCK SWITCH
MANGEMENT SWITCH - CRUISE
MANAGEMENT SWITCH - MAX
HITCH SWITCH-RAISE
HITCH SWITCH-LOWER
MT700 option only
CREEPER SWITCH
C23
1/12 SENSOR +3.33V
SENSOR +3.33V
2/12 PER/DIFF LOCK SWITCH
3/12 SENSOR +1.66V
4/12 SENSOR +1.66V
C12
1/12 SENSOR +1.66V
2/12 PTO SWITCH-DISENGAGE
REAR PTO SWITCH
3/12 SENSOR +3.33V
4/12
SENSOR +3.33V
5/12 PTO SWITCH-ENGAGE
6/12
SENSOR +1.66V
C10
ROADING LOCK SWITCH
1/12 SENSOR +3.33V
SENSOR +3.33V
2/12 ROADING LOCK SWITCH
4/12 SENSOR +1.66V
SENSOR +1.66V
C2
1/12 SENSOR +1.66V
2/12 MANGEMENT SWITCH - CRUISE
POWER MANAGE SWITCH
SENSOR +3.33V
4/12
5/12
SENSOR +3.33V
7/12 MANAGEMENT SWITCH - MAX
8/12 SENSOR +1.66V
C3
SENSOR +1.66V
1/12
2/12 HITCH SWITCH-RAISE
SENSOR +3.33V
RAISE WORK SWITCH
4/12
5/12
7/12 HITCH SWITCH-LOWER
8/12
TRHJA011039790

Fig. 553

10.7.96.2 Auto-Guide™ engage switch



Fig. 554 Switch pinout

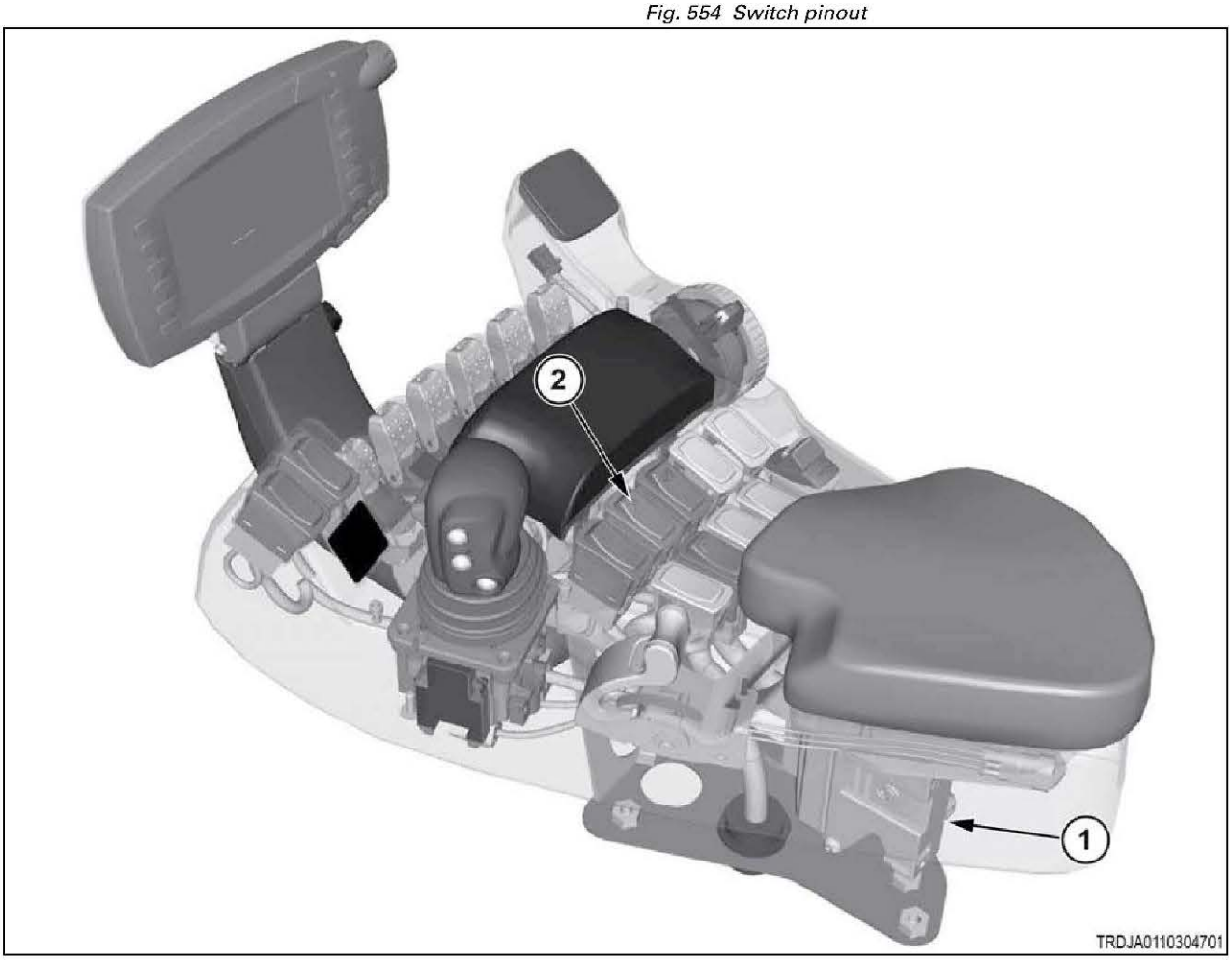

Fig. 555

(1)	Armrest module
(2)	Auto-Guide™ engage switch

10.7.97 Code SA 05 SPN 520197 FMI 04

The Auto-Guide™ engage switch signal voltage is below normal.

The signal voltage is lower than the 1.66-volt supply. The most likely cause is a short circuit to ground.

The switch is a single-pole, double-throw (SPDT) type switch, except the "common" terminal is the data output instead of a power source. The 2 other contacts are connected to 3.33-volt power and 1.66-volt power. Operating the switch selects one of these voltages for the signal output. This error will likely be accompanied by a power supply error too. This information can be used to isolate the cause.

Diagnosis and solution

1. Determine when this error is reported.

a) Turn the key start switch to the on position.

b) Check for this error code (SA 05 SPN 520197 FMI 04) as you operate the switch between on and off states.

Note that power supply errors will likely also be reported, as noted below.

Result

- The error is reported only when the switch is in the off position.

  Error code SA 05 SPN 3511 FMI 04 (3.33V power) is likely also reported.

  Diagnose the power supply error code first.

  Stop.
- The error is reported only when the switch is in the on position.

  Error code SA 05 SPN 3510 FMI 04 (1.66V power) is likely also reported.

  Diagnose the power supply error code first.

  Stop.
- The error is reported regardless of switch position.

  The signal wire is shorted to ground.

  Repair or replace the harness.

  See step 2 to validate the repair.

2. Check if the fault code remains.

a) Inspect and clean the harness connector contacts.

b) Connect all the connectors.

c) Turn the battery disconnect switch to the on position.

d) Turn the key start switch to the on position.

e) Operate the machine at low idle.

f) Check if the fault code remains.

Result

- SPN 520197 FMI 04 is not active.

  Stop.
- SPN 520197 FMI 04 is active.

  Failure of the armrest module is possible but not common. Exit the procedure and do the procedure again. If the fault code remains active, replace the armrest module.

  Stop.

10.7.97.1 Auto-Guide™ switch electrical schematic

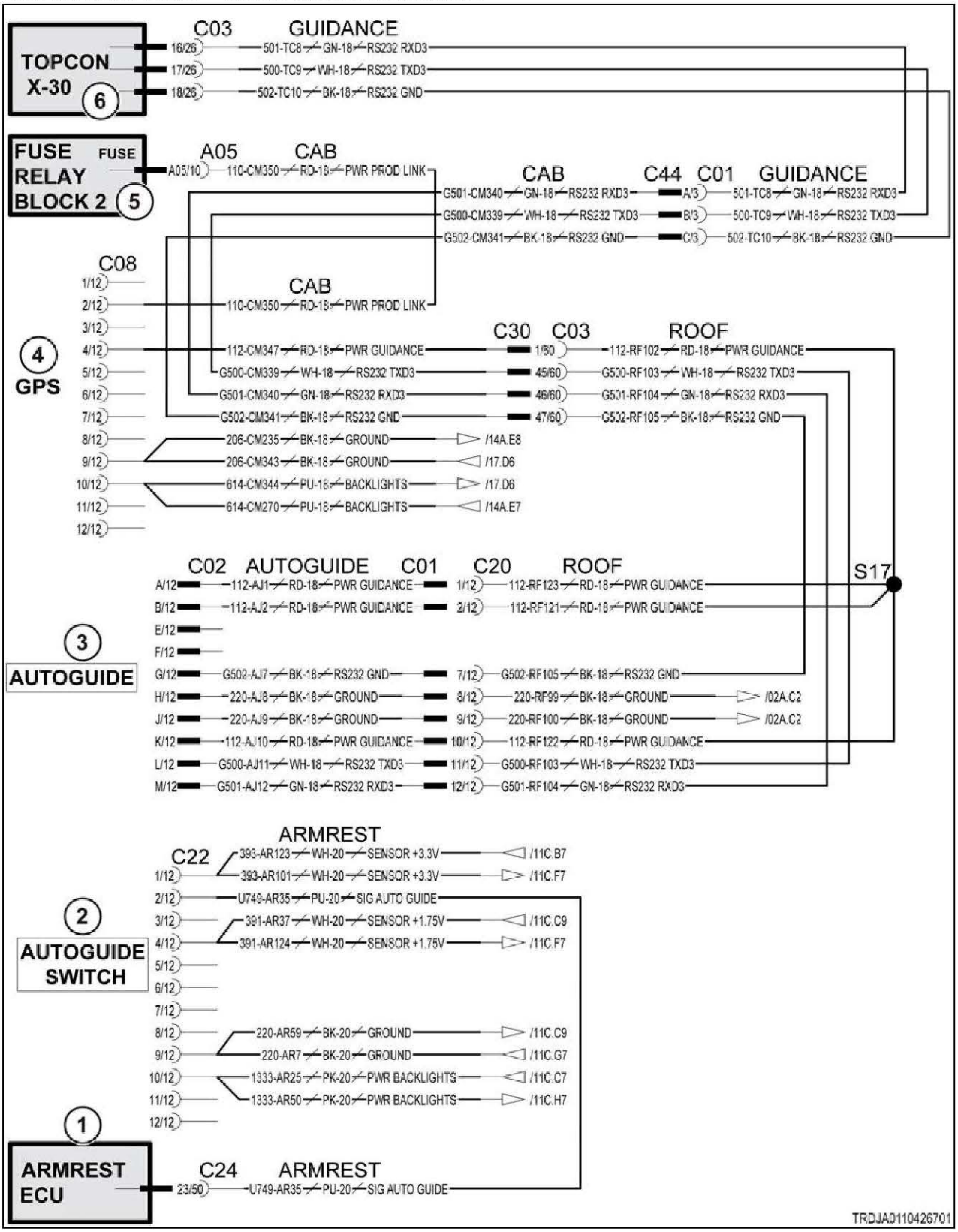

Fig. 556

Schematic legend		
Item	**Schematic term**	**Description**
1	ARMREST ECU	Armrest module
2	AUTOGUIDE SWITCH	Auto-Guide™ switch
3	AUTOGUIDE	Auto-Guide™
4	GPS	Global positioning system
5	FUSE RELAY BLOCK 2	Fuse relay block 2
6	TOPCON X-30	Topcon
--	PWR BACKLIGHTS	Power to rear lamps
--	PWR GUIDANCE	Power to guidance
--	PWR PROD LINK	Power to product link
--	SIG AUTOGUIDE	Signal Auto-Guide

1.7v and 3.3v schematics

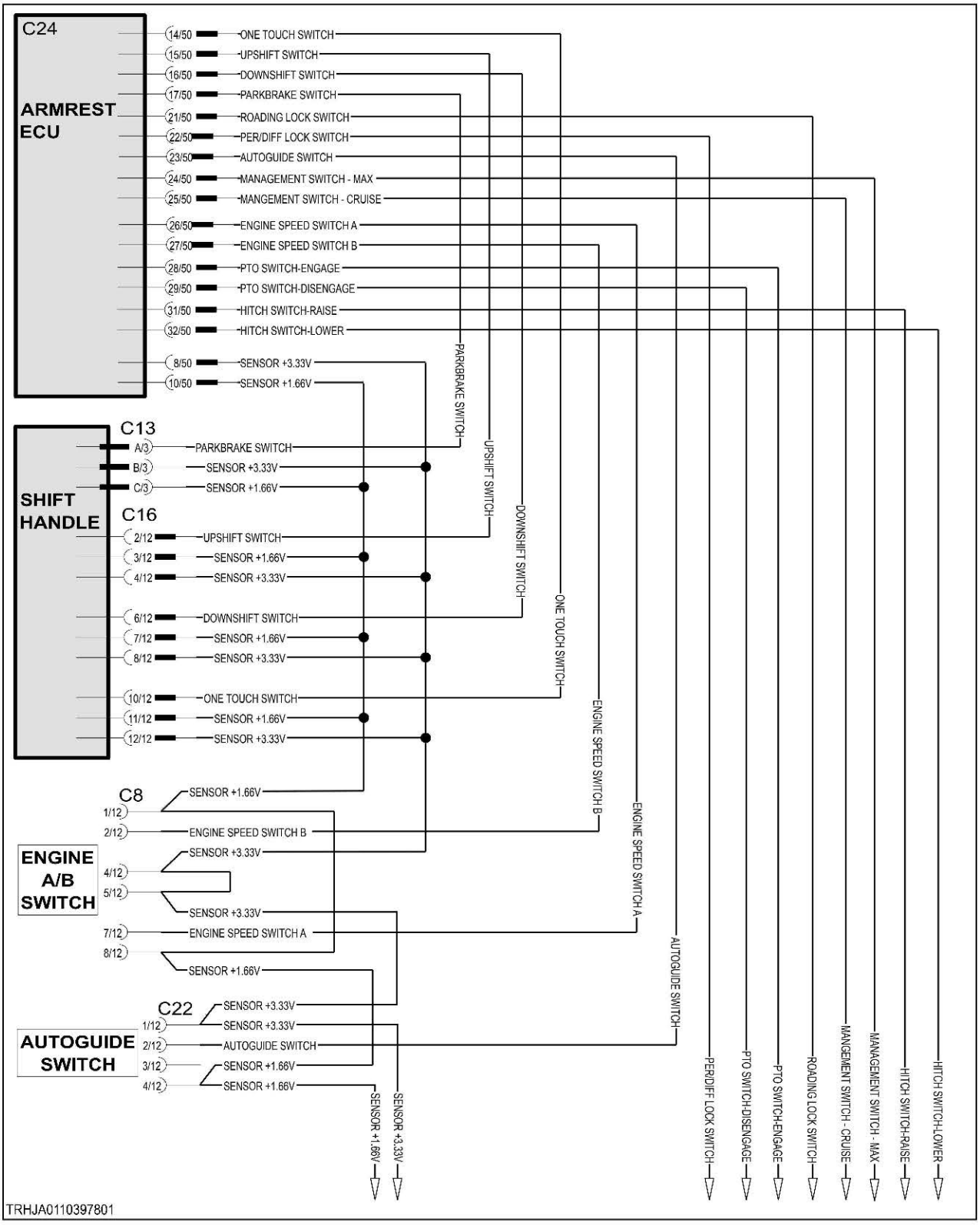

Fig. 557

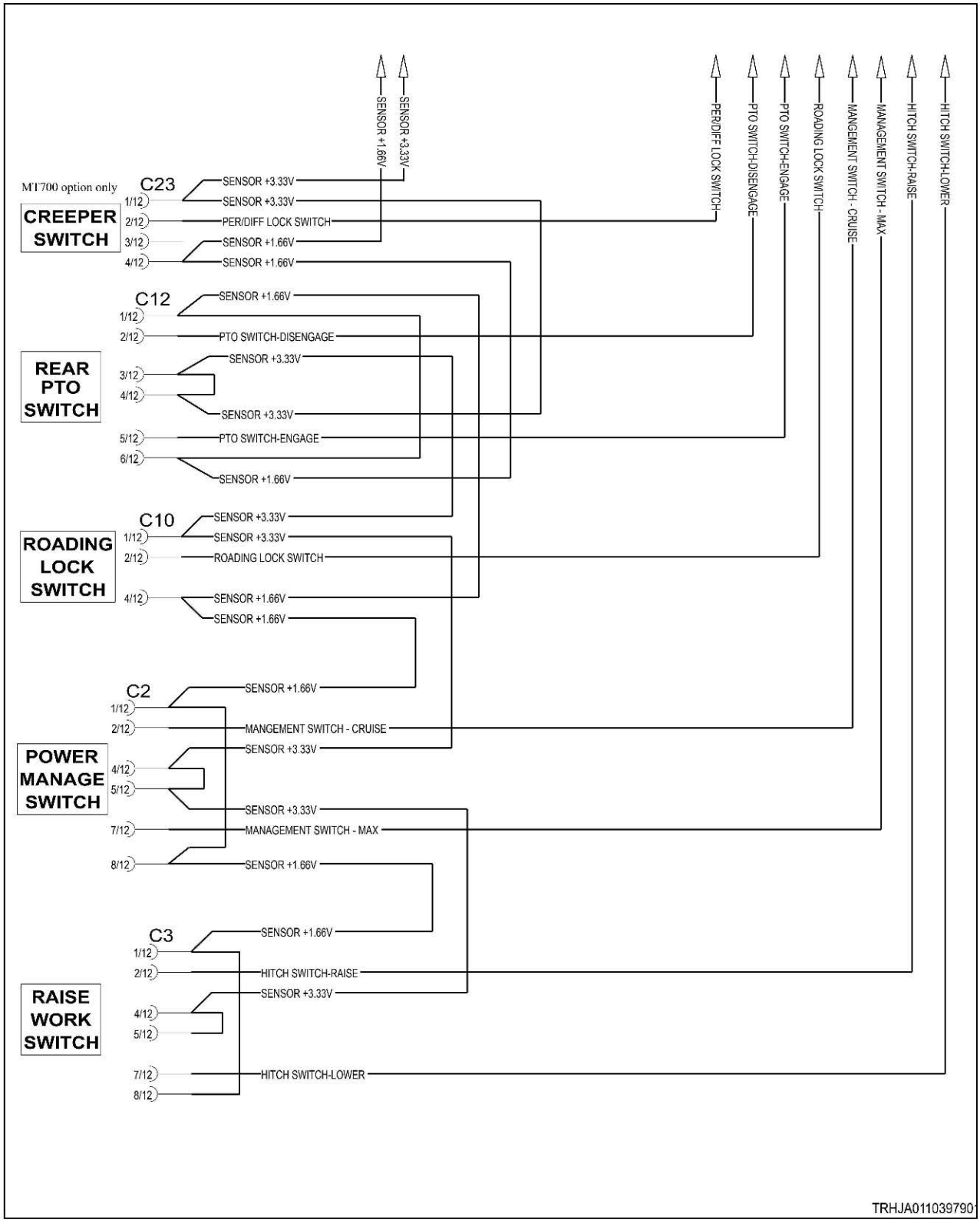
SENSOR +1.66V
SENSOR +3.33V
PER/DIFF LOCK SWITCH
PTO SWITCH-DISENGAGE
PTO SWITCH-ENGAGE
ROADING LOCK SWITCH
MANGEMENT SWITCH - CRUISE
MANAGEMENT SWITCH - MAX
HITCH SWITCH-RAISE
HITCH SWITCH-LOWER
MT700 option only
CREEPER SWITCH
C23
1/12 SENSOR +3.33V
SENSOR +3.33V
2/12 PER/DIFF LOCK SWITCH
3/12 SENSOR +1.66V
4/12 SENSOR +1.66V
C12
1/12 SENSOR +1.66V
2/12 PTO SWITCH-DISENGAGE
REAR PTO SWITCH
3/12 SENSOR +3.33V
4/12
SENSOR +3.33V
5/12 PTO SWITCH-ENGAGE
6/12
SENSOR +1.66V
C10
1/12 SENSOR +3.33V
ROADING LOCK SWITCH
SENSOR +3.33V
2/12 ROADING LOCK SWITCH
4/12 SENSOR +1.66V
SENSOR +1.66V
C2
1/12 SENSOR +1.66V
2/12 MANGEMENT SWITCH - CRUISE
POWER MANAGE SWITCH
SENSOR +3.33V
4/12
5/12
SENSOR +3.33V
7/12 MANAGEMENT SWITCH - MAX
8/12 SENSOR +1.66V
C3
SENSOR +1.66V
1/12
2/12 HITCH SWITCH-RAISE
SENSOR +3.33V
RAISE WORK SWITCH
4/12
5/12
7/12 HITCH SWITCH-LOWER
8/12
TRHJA011039790

Fig. 558

10.7.97.2 Auto-Guide™ engage switch



Fig. 559 Switch pinout

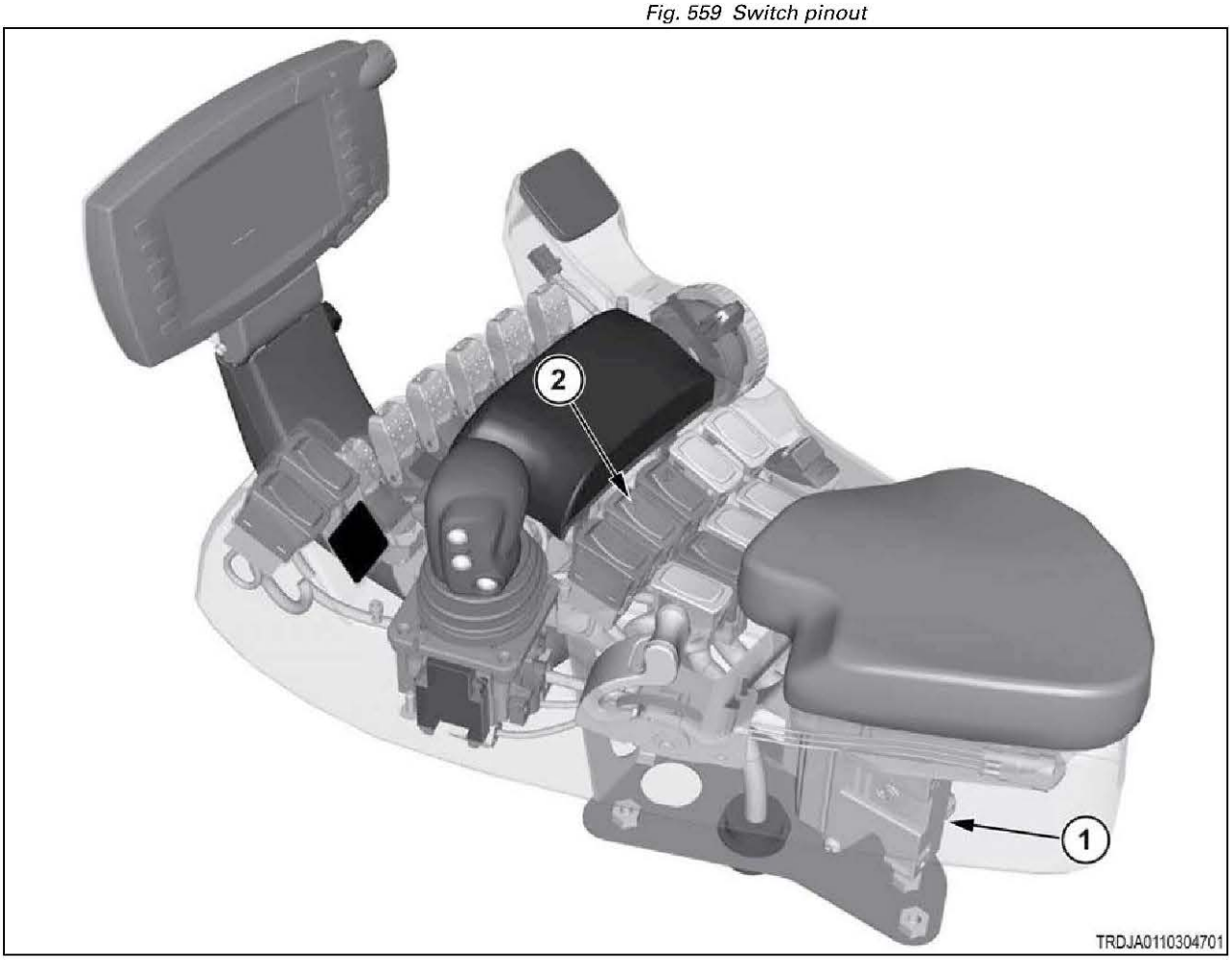

Fig. 560

(1)	Armrest module
(2)	Auto-Guide™ engage switch

10.7.98 Code SA 05 SPN 520197 FMI 05

Open circuit in the Auto-Guide™ engage switch circuit.

The switch is a single-pole, double-throw (SPDT) type switch, except the "common" terminal is the data output instead of a power source. The 2 other contacts are connected to 3.33-volt power and 1.66-volt power. Operating the switch selects one of these voltages for the signal output. These 2 power circuits are shared by several other function switches on the armrest. This knowledge can aid in diagnosing the fault.

Diagnosis and solution

1. Determine when this error is reported.

a) Turn the key start switch to the on position.

b) Check whether the error code is reported as you operate the switch between on and off states.

Result

- The error is reported only when the switch is in the off position.

  The open circuit is in the 3.33V power circuit.

  See step 2 to isolate the location.
- The error is reported only when the switch is in the on position.

  The open circuit is in the 1.66V power circuit.

  See step 2 to isolate the location.
- The error is reported regardless of switch position.

  The open circuit is in the signal circuit.

  Repair or replace the armrest harness.

  See step 3 to validate the repair.

2. Isolate the power circuit open circuit.

a) Operate all upstream (and at least one downstream) armrest switches, according to the list below, from their off to on positions.

Electrical sequence of switches, starting from the armrest module.

1. Shift Handle (3 pushbuttons)
2. Engine A/B switch
3. Auto-Guide™ switch
4. Creeper switch
5. Rear PTO
6. Roading Lock switch
7. Power management (cruise/full) switch
8. Hitch Raise/Work switch

b) Observe which other switches (if any) exhibit similar open circuit error codes.

Result

- At least one upstream switch reported a similar error.

  The open circuit lies at, or just upstream from, that switch.

  Repair or replace the armrest harness.

  See step 3 to validate the repair.

- Only downstream switches reported similar errors.

  The harness is open circuited at this switch location.

  Repair or replace the harness.

  See step 3 to validate the repair.
- No other switches reported similar errors.

  The switch is at fault.

  Replace the switch.

  See step 3 to validate the repair.

3. Check if the fault code remains.

a) Inspect and clean the harness connector contacts.
b) Connect all the connectors.
c) Turn the battery disconnect switch to the on position.
d) Turn the key start switch to the on position.
e) Operate the machine at low idle.
f) Check if the fault code remains.

Result

- SPN 520197 FMI 05 is not active.

  Stop.
- SPN 520197 FMI 05 is active.

  Failure of the armrest module is possible but not common. Exit the procedure and do the procedure again. If the fault code remains active, replace the armrest module.

  Stop.

10.7.98.1 Auto-Guide™ switch electrical schematic

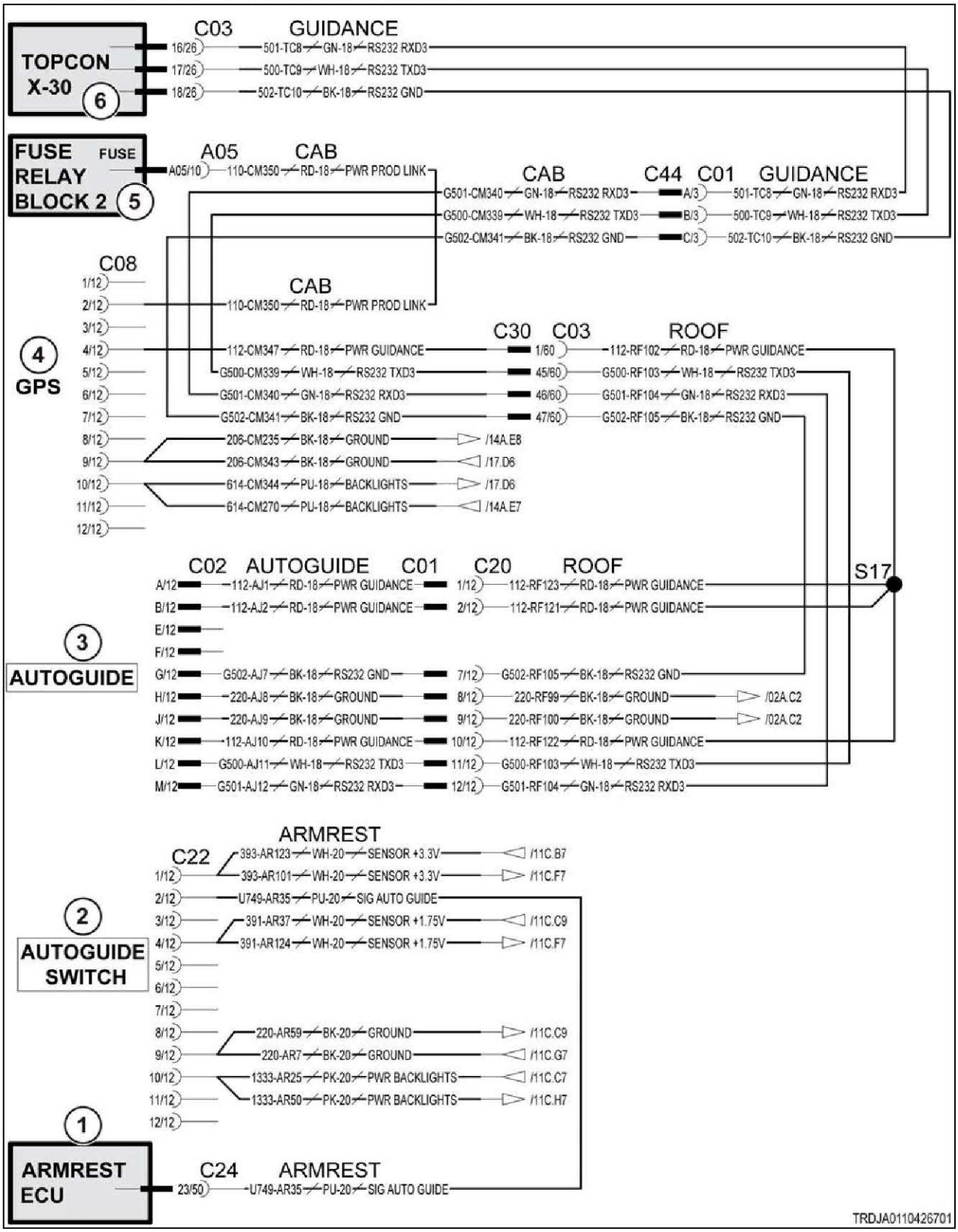

Fig. 561

Schematic legend		
Item	**Schematic term**	**Description**
1	ARMREST ECU	Armrest module
2	AUTOGUIDE SWITCH	Auto-Guide™ switch
3	AUTOGUIDE	Auto-Guide™
4	GPS	Global positioning system
5	FUSE RELAY BLOCK 2	Fuse relay block 2
6	TOPCON X-30	Topcon
--	PWR BACKLIGHTS	Power to rear lamps
--	PWR GUIDANCE	Power to guidance
--	PWR PROD LINK	Power to product link
--	SIG AUTOGUIDE	Signal Auto-Guide

1.7v and 3.3v schematics

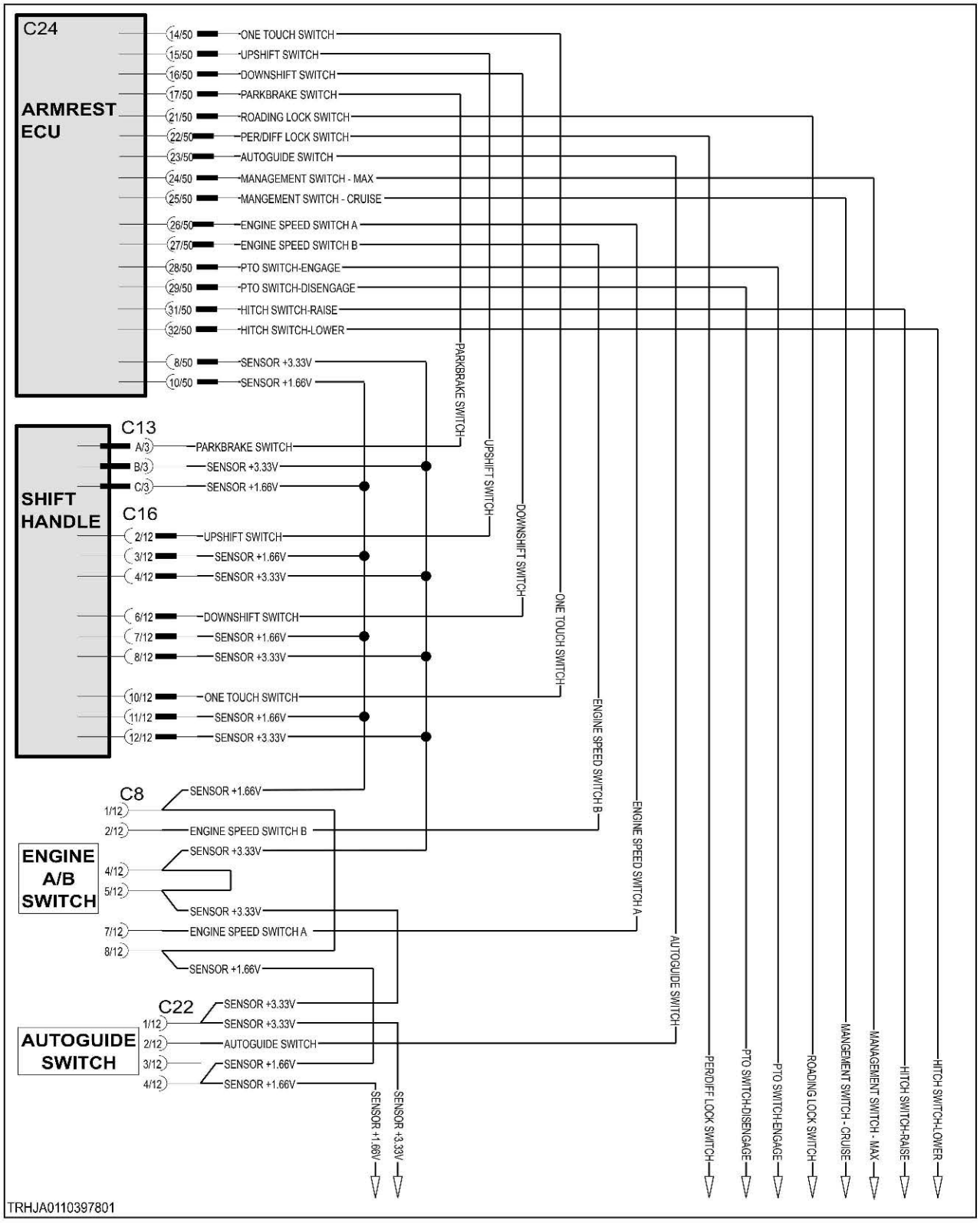

Fig. 562

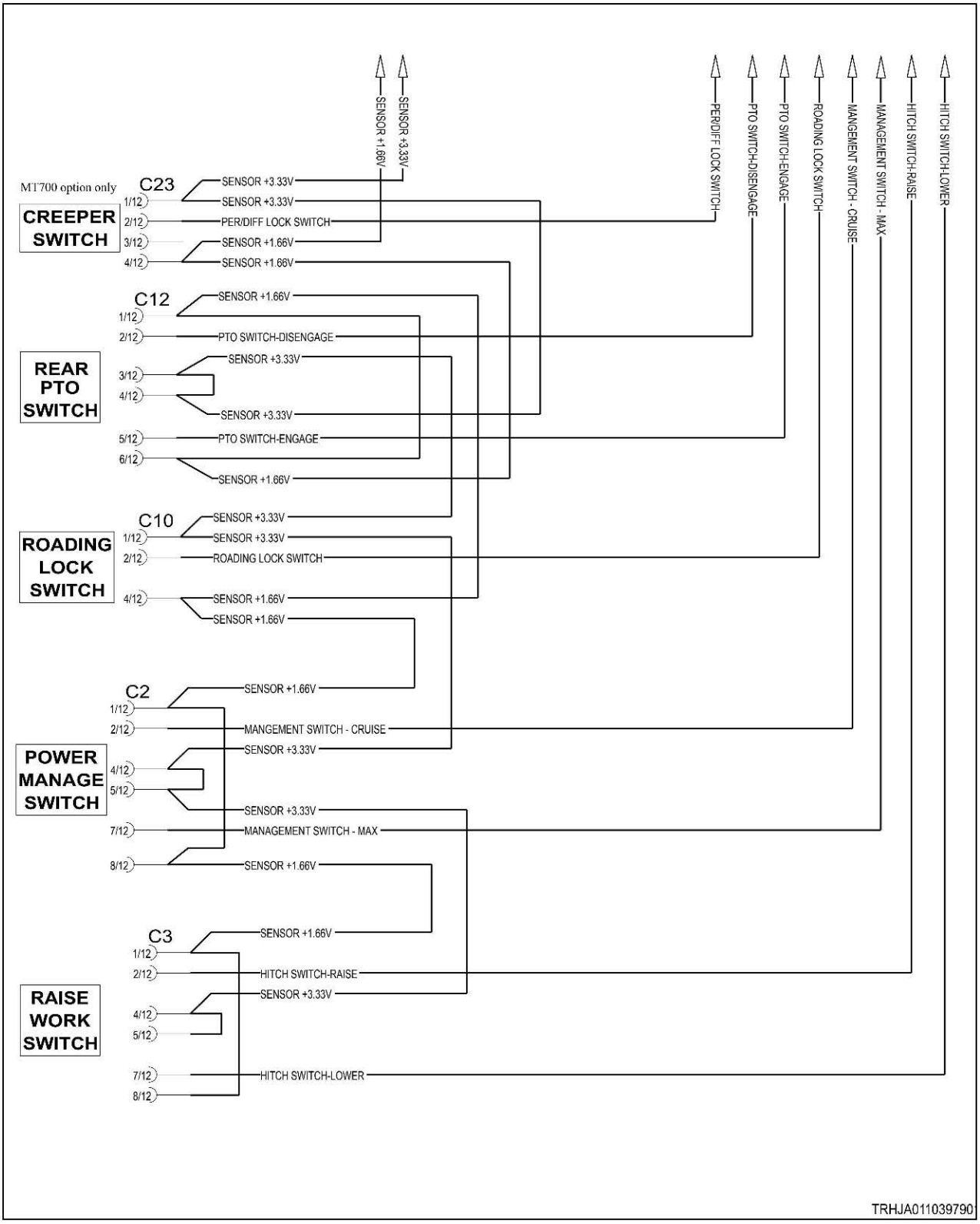
SENSOR +1.66V
SENSOR +3.33V
PER/DIFF LOCK SWITCH
PTO SWITCH-DISENGAGE
PTO SWITCH-ENGAGE
ROADING LOCK SWITCH
MANGEMENT SWITCH - CRUISE
MANAGEMENT SWITCH - MAX
HITCH SWITCH-RAISE
HITCH SWITCH-LOWER
MT700 option only
CREEPER SWITCH
C23
1/12 SENSOR +3.33V
SENSOR +3.33V
2/12 PER/DIFF LOCK SWITCH
3/12 SENSOR +1.66V
4/12 SENSOR +1.66V
C12
1/12 SENSOR +1.66V
2/12 PTO SWITCH-DISENGAGE
REAR PTO SWITCH
3/12 SENSOR +3.33V
4/12
SENSOR +3.33V
5/12 PTO SWITCH-ENGAGE
6/12
SENSOR +1.66V
C10
1/12 SENSOR +3.33V
SENSOR +3.33V
ROADING LOCK SWITCH
2/12 ROADING LOCK SWITCH
4/12 SENSOR +1.66V
SENSOR +1.66V
C2
1/12 SENSOR +1.66V
2/12 MANGEMENT SWITCH - CRUISE
POWER MANAGE SWITCH
SENSOR +3.33V
4/12
5/12
SENSOR +3.33V
7/12 MANAGEMENT SWITCH - MAX
8/12 SENSOR +1.66V
C3
SENSOR +1.66V
1/12
2/12 HITCH SWITCH-RAISE
SENSOR +3.33V
RAISE WORK SWITCH
4/12
5/12
7/12 HITCH SWITCH-LOWER
8/12
TRHJA011039790

Fig. 563

10.7.98.2 Auto-Guide™ engage switch



Fig. 564 Switch pinout

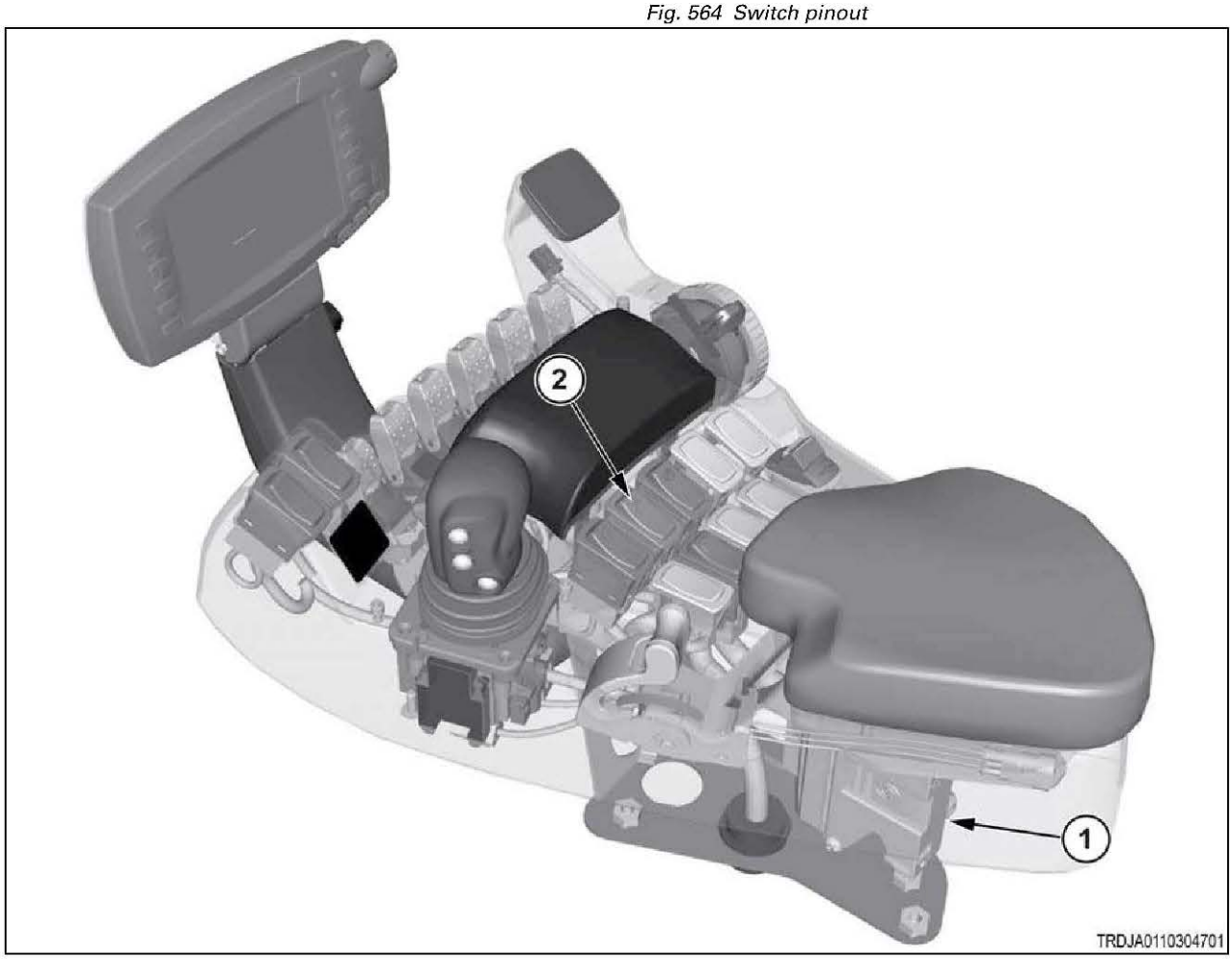

Fig. 565

(1)	Armrest module
(2)	Auto-Guide™ engage switch

10.7.99 Code SA 05 SPN 521474 FMI 02

The rear hitch raise switch signal is erratic, intermittent, or incorrect.

The switch is a momentary double-pole, double-throw (DPDT) type switch, except the "common" terminal is the data output instead of a power source. The 4 other contacts are connected to 3.33-volt power and 1.66-volt power. Operating the switch selects one of these voltages for the signal output. These 2 power circuits are shared by several other function switches on the armrest. This knowledge can aid in diagnosing the fault.

Diagnosis and solution

1. Check the function of upstream switches that share power circuits.

This will help isolate whether the switch power signals are at fault.

a) Turn the key start switch to the on position.
b) Operate the power management switch in both directions.
c) Check for additional error codes.

Result

- SA 05 SPN 601 FMI 02 (power management) is reported.

  Focus further examination on the power circuits between the power management switch and the armrest controller.

  See step 2 to check for loose connections.
- No additional error codes are reported.

  The power circuits are not suspect.

  Focus further examination on the switch signal output.

  See step 2 to check for loose connections.

2. Inspect all harness and switch connections.

a) Turn the key start switch to the off position.
b) Turn the battery disconnect switch to the off position.
c) Open the top of the armrest console.
d) Inspect and clean all connectors and connector contacts:

- Look for bent or worn pins.
- Look for deformed or oversized sockets.
- Look for corrosion on the pins and sockets. Corrosion is a sign of a loose connection.
- Look for signs of overheating. Overheating is a sign of a poor connection, and can further loosen the pin or socket mount. The whole connector body should be replaced.

e) Make sure to inspect the circuits identified in step 1 as they pass through the following connector locations:

- Switch signal at the armrest ECU C24-31 and C24-32.
- All contacts at the raise/work switch.

- The 1.66V and 3.33V power signals as they pass through the following switches:

  Power management switch

  Roading lockout switch

  Rear PTO switch

  Creeper switch

  Auto Guide switch

  Engine A/B switch

  Shift Handle

  Armrest ECU C24-8 (3.33V) and C24-10 (1.66V)

f) Repair or replace any connector or harness found faulty.

Result

- No faulty contacts were found.

  See step 3 to check the switch function.
- Faulty contacts were found and repaired.

  See step 4 to validate the repair.

3. Check the switch function.

a) Disconnect the raise/work switch.

b) Check resistance between contacts 2 & 1 and 2 & 4, as you operate the switch from neutral, raise, and lower.

c) Check resistance between contacts 7 & 5 and 7 & 8, as you operate the switch from neutral, raise, and lower.

- In the neutral-position, contacts 2 & 4 and 7 & 5 should have continuity.
- In the raise-position, contacts 2 & 1 should have continuity.
- In the B-position, contacts 7 & 8 should have continuity.

Result

- Continuity checks are correct.

  See step 4 to check if the error persists.
- Continuity checks are incorrect.

  Replace the switch.

  See step 4 to validate the repair.

4. Check if the fault code remains.

a) Inspect and clean the harness connector contacts.

b) Connect all the connectors.

c) Turn the battery disconnect switch to the on position.

d) Turn the key start switch to the on position.

e) Operate the machine at low idle.

f) Check if the fault code remains.

Result

- SPN 521474 FMI 02 is not active.

  Stop.

- SPN 521474 FMI 02 is active.

  Failure of the armrest module is possible but not common. Exit the procedure and do the procedure again. If the fault code remains active, replace the armrest module.

  Stop.

10.7.99.1 Hitch raise/lower switch electrical schematic

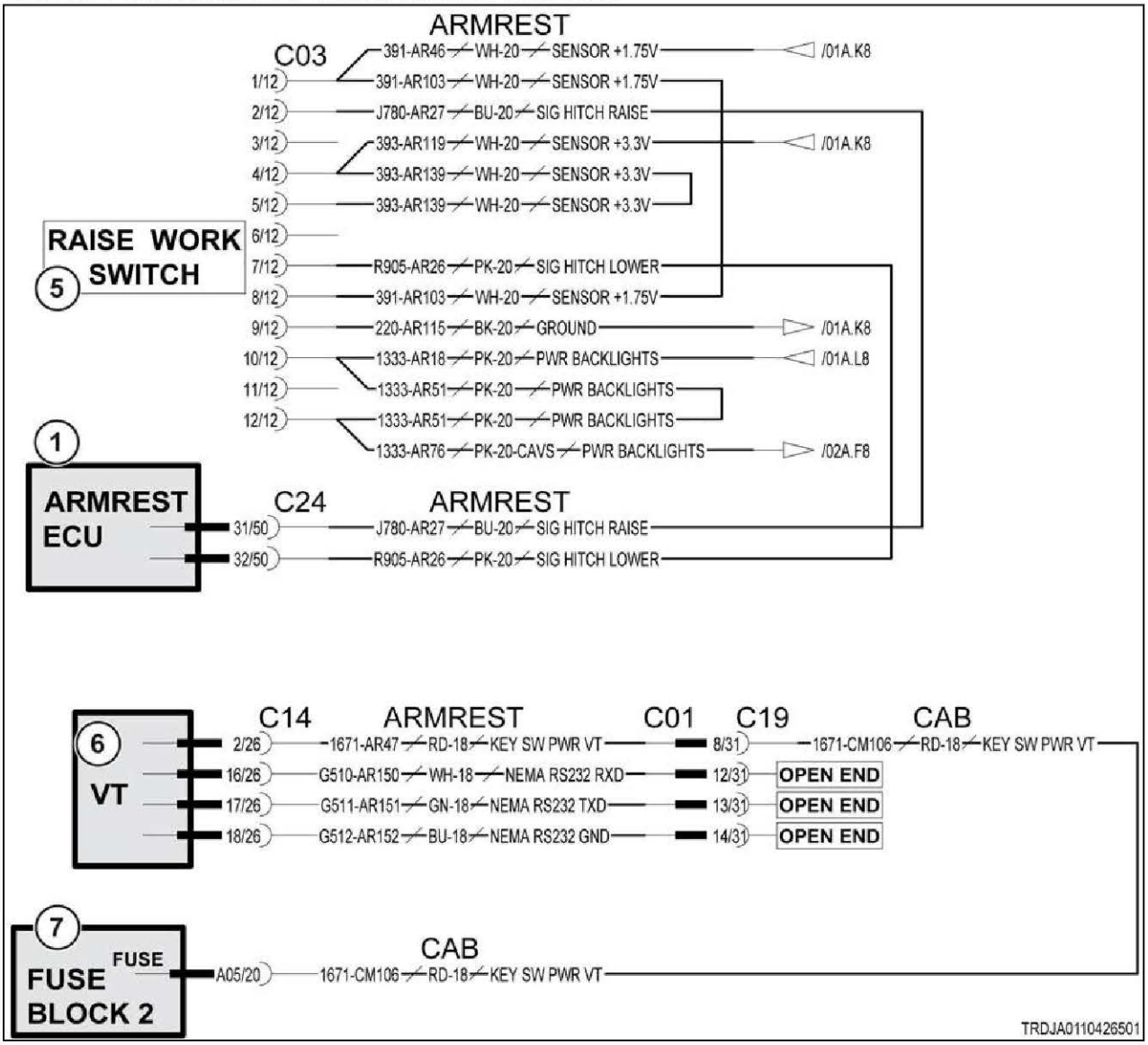

Fig. 566

Schematic legend		
Item	**Schematic term**	**Description**
1	ARMREST ECU	Armrest module
5	RAISE WORK SWITCH	Hitch raise/lower switch
6	VT	Virtual terminal
7	FUSE RELAY BLOCK 2	Fuse relay block 2
--	SIG HITCH RAISE	Signal hitch raise

Schematic legend		
Item	Schematic term	Description
--	SIG HITCH LOWER	Signal hitch lower
--	PWR BACKLIGHTS	Power to rear lamps
--	KEY SW PWR VT	Key switch power to virtual terminal

10.7.99.2 Hitch raise/lower switch



Fig. 567 Switch pinout

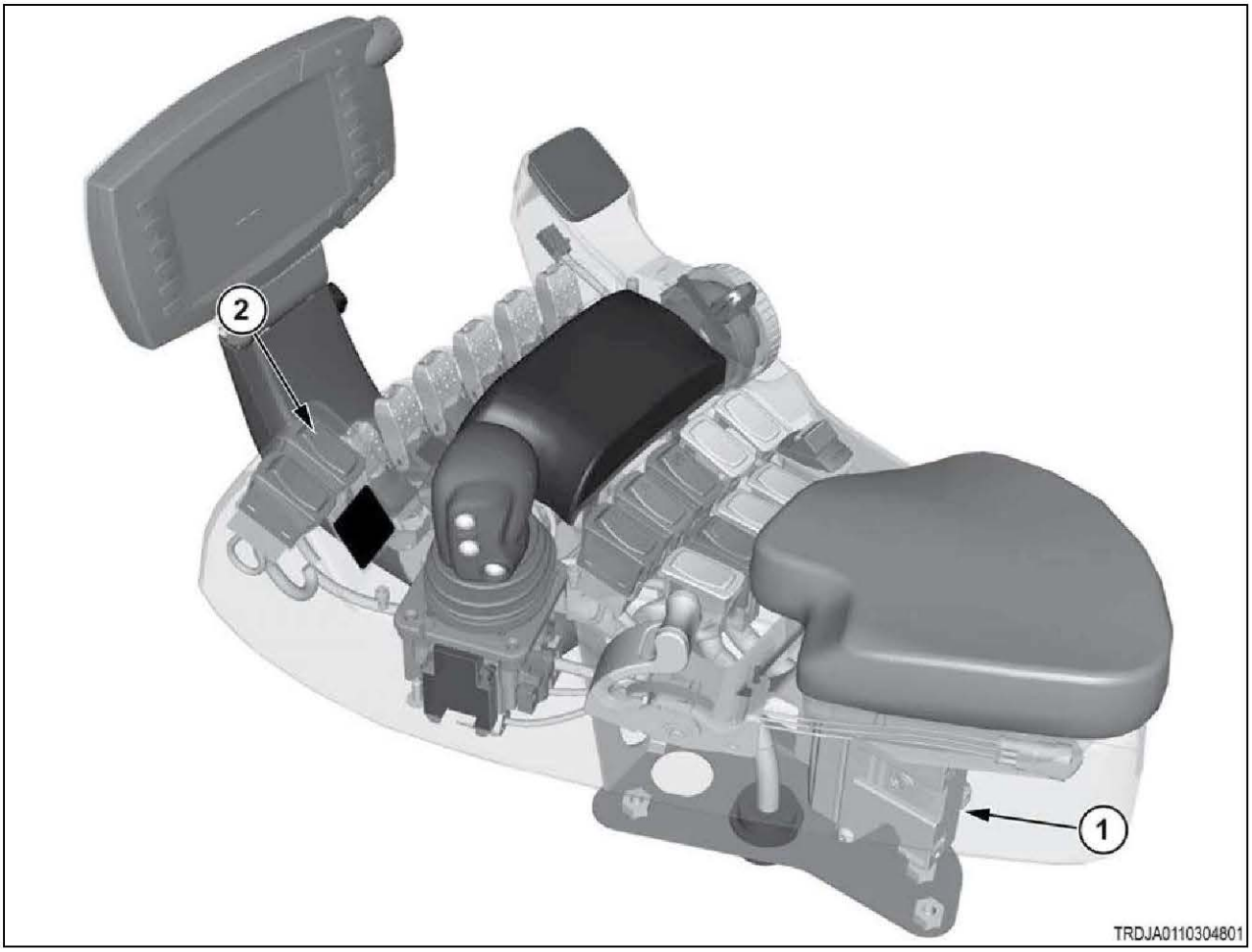

Fig. 568

(1)	Armrest module
(2)	Hitch raise/lower switch

10.7.100 Code SA 05 SPN 521474 FMI 03

The rear hitch raise switch signal voltage is above normal.

The signal voltage is higher than the 3.33-volt supply. The most likely cause is a short circuit to a higher voltage circuit.

The switch is a momentary double-pole, double-throw (DPDT) type switch, except the "common" terminal is the data output instead of a power source. The 4 other contacts are connected to 3.33-volt power and 1.66-volt power. Operating the switch selects one of these voltages for the signal output. One set of contacts for raise and one set for lower. This error will likely be accompanied by a power supply error too. This information can be used to isolate the cause.

Diagnosis and solution

1. Determine when this error is reported.
   a) Turn the key start switch to the on position.
   b) Check for this error code (SA 05 SPN 521474 FMI 03) as you operate the switch between the center position and hitch raise position.

      Note that power supply errors will likely also be reported, as noted below.

Result

- The error is reported only when the switch is in the center position.

  Error code SA 05 SPN 3511 FMI 03 (3.33V power) is likely also reported.

  Diagnose the power supply error code first.

  Stop.
- The error is reported only when the switch is in the on position.

  Error code SA 05 SPN 3510 FMI 03 (1.66V power) is likely also reported.

  Diagnose the power supply error code first.

  Stop.
- The error is reported regardless of switch position.

  The signal wire is shorted to some voltage source.

  Repair or replace the harness.

  See step 2 to validate the repair.

2. Check if the diagnostic code remains.

a) Inspect and clean the harness connector contacts.
b) Connect all the connectors.
c) Turn the battery disconnect switch to the on position.
d) Turn the key start switch to the on position.
e) Operate the machine at low idle.
f) Check if the diagnostic code remains.

Result

- SPN 521474 FMI 03 is not active.

  Stop.
- SPN 521474 FMI 03 is active.

  Failure of the armrest module is possible but not common. Exit the procedure and do the procedure again. If the diagnostic code remains active, replace the module.

  Stop.

10.7.100.1 Hitch raise/lower switch electrical schematic

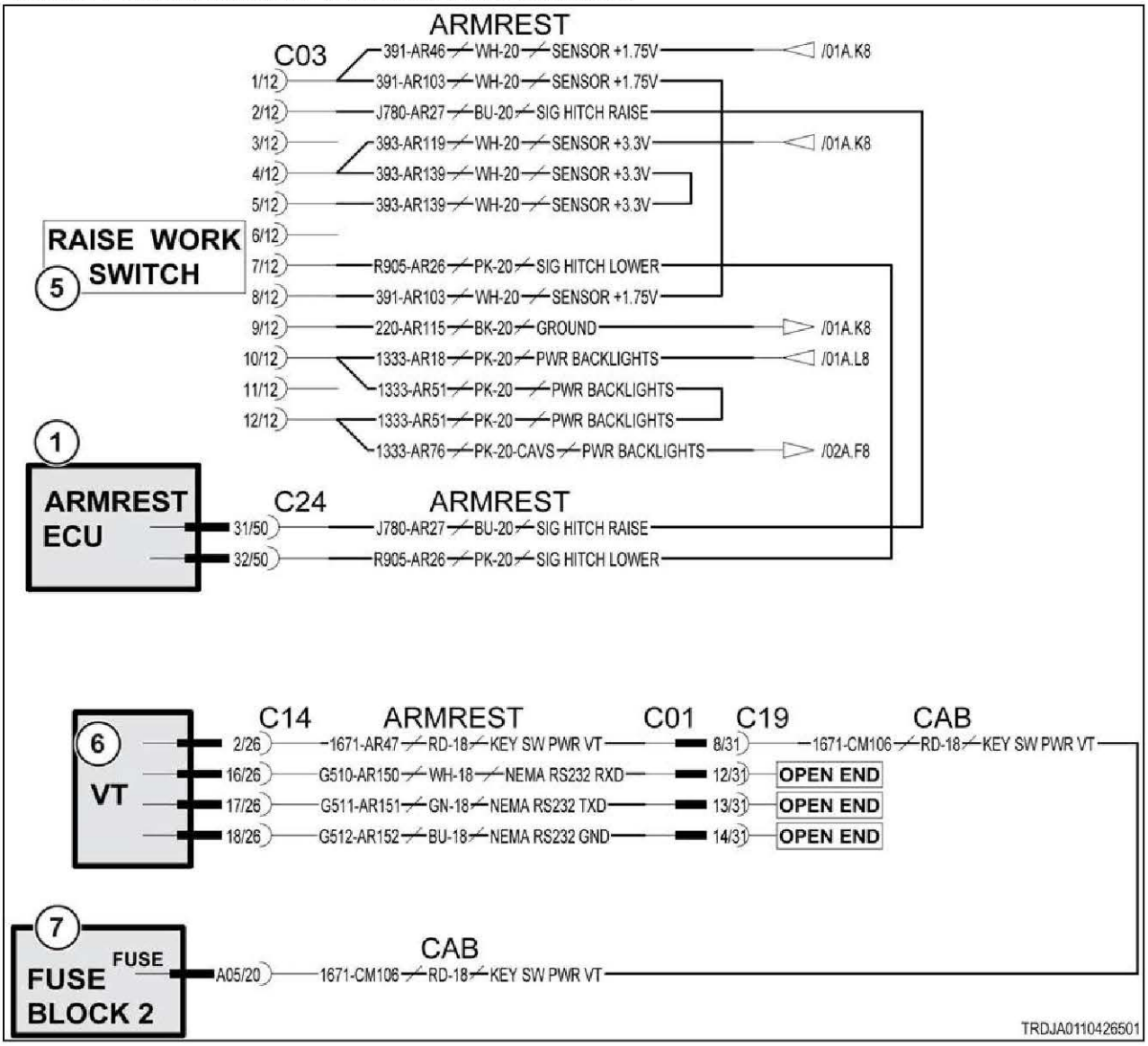

Fig. 569

Schematic legend		
Item	**Schematic term**	**Description**
1	ARMREST ECU	Armrest module
5	RAISE WORK SWITCH	Hitch raise/lower switch
6	VT	Virtual terminal
7	FUSE RELAY BLOCK 2	Fuse relay block 2
--	SIG HITCH RAISE	Signal hitch raise
--	SIG HITCH LOWER	Signal hitch lower
--	PWR BACKLIGHTS	Power to rear lamps
--	KEY SW PWR VT	Key switch power to virtual terminal

10.7.100.2 Hitch raise/lower switch



Fig. 570 Switch pinout

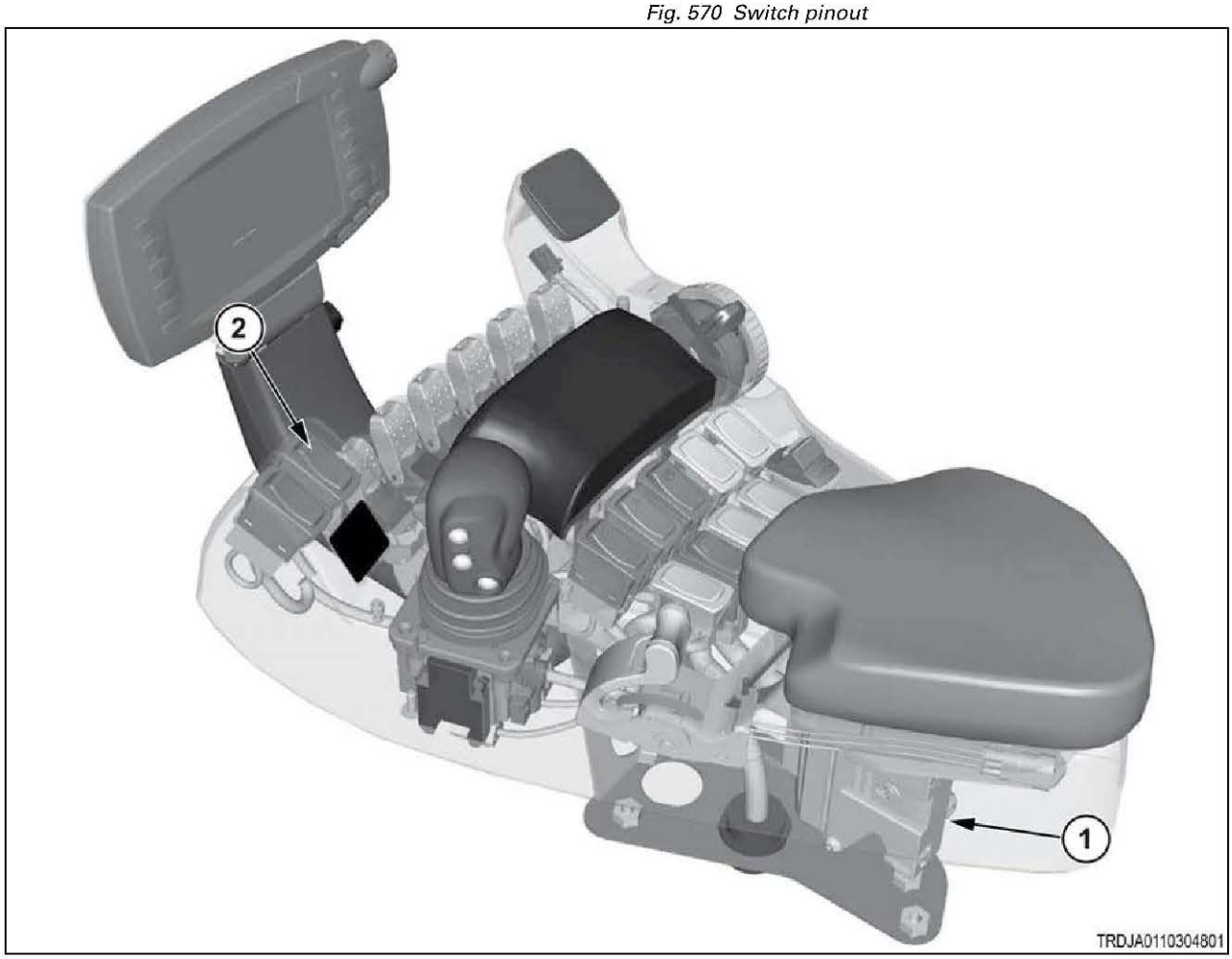

Fig. 571

(1)	Armrest module
(2)	Hitch raise/lower switch

10.7.101 Code SA 05 SPN 521474 FMI 04

The rear hitch raise switch signal voltage is below normal.

The signal voltage is lower than the 1.66-volt supply. The most likely cause is a short circuit to ground.

The switch is a momentary double-pole, double-throw (DPDT) type switch, except the "common" terminal is the data output instead of a power source. The 4 other contacts are connected to 3.33-volt power and 1.66-volt power. Operating the switch selects one of these voltages for the signal output. One set of contacts is for raise and one set for lower. This error will likely be accompanied by a power supply error too. This information can be used to isolate the cause.

Diagnosis and solution

1. Determine when this error is reported.

a) Turn the key start switch to the on position.

b) Check for this error code (SA 05 SPN 521474 FMI 04) as you operate the switch between the center position and raise position.

Note that power supply errors will likely also be reported, as noted below.

Result

- The error is reported only when the switch is in the center position.

  Error code SA 05 SPN 3511 FMI 04 (3.33V power) is likely also reported.

  Diagnose the power supply error code first.

  Stop.
- The error is reported only when the switch is in the raise position.

  Error code SA 05 SPN 3510 FMI 04 (1.66V power) is likely also reported.

  Diagnose the power supply error code first.

  Stop.
- The error is reported regardless of switch position.

  The signal wire is shorted to ground.

  Repair or replace the harness.

  See step 2 to validate the repair.

2. Check if the diagnostic code remains.

a) Inspect and clean the harness connector contacts.

b) Connect all the connectors.

c) Turn the battery disconnect switch to the on position.

d) Turn the key start switch to the on position.

e) Operate the machine at low idle.

f) Check if the diagnostic code remains.

Result

- SPN 521474 FMI 04 is not active.

  Stop.
- SPN 521474 FMI 04 is active.

  Failure of the armrest module is possible but not common. Exit the procedure and do the procedure again. If the diagnostic code remains active, replace the module.

  Stop.

10.7.101.1 Hitch raise/lower switch electrical schematic

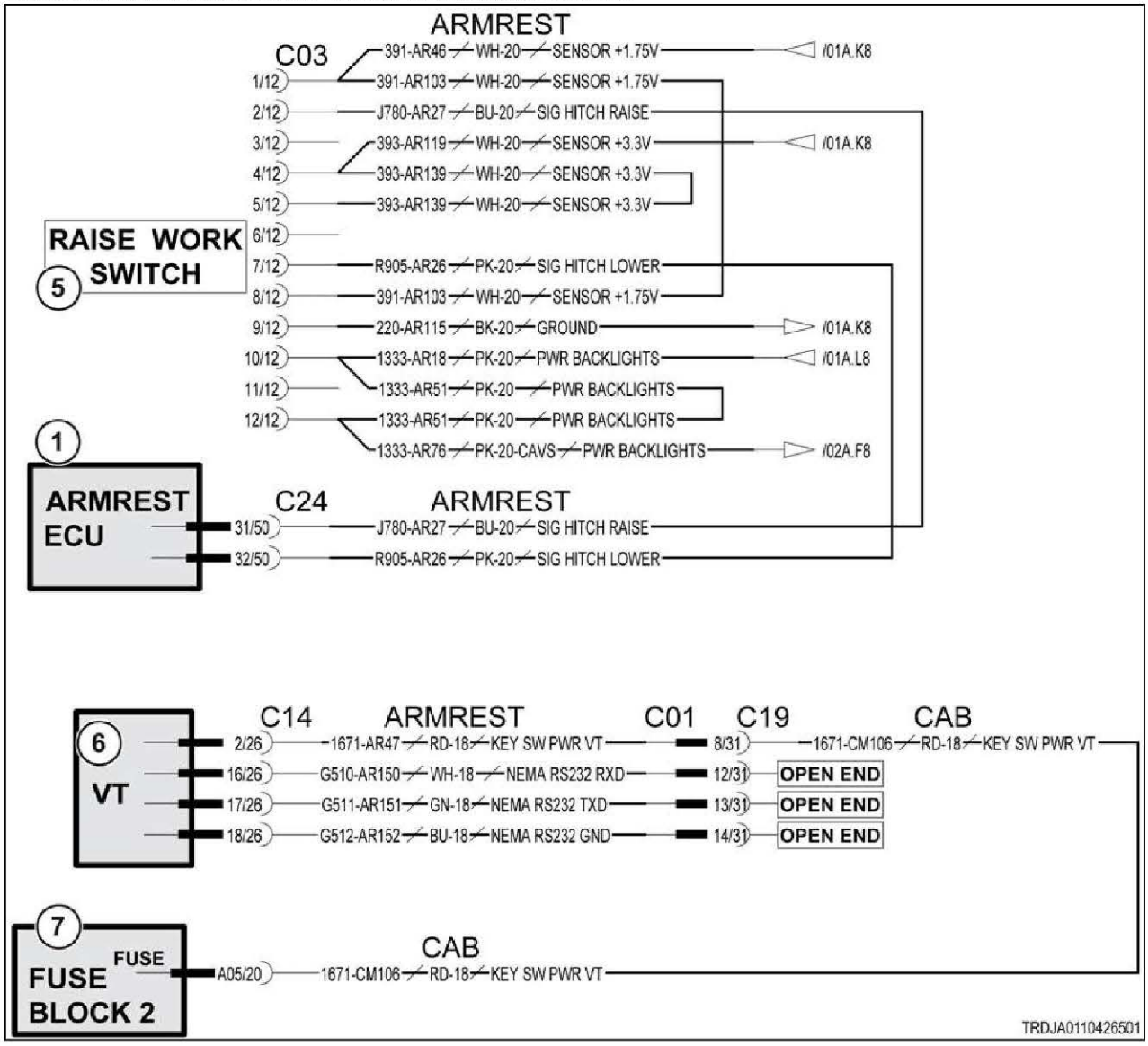

Fig. 572

Schematic legend		
Item	**Schematic term**	**Description**
1	ARMREST ECU	Armrest module
5	RAISE WORK SWITCH	Hitch raise/lower switch
6	VT	Virtual terminal
7	FUSE RELAY BLOCK 2	Fuse relay block 2
--	SIG HITCH RAISE	Signal hitch raise
--	SIG HITCH LOWER	Signal hitch lower
--	PWR BACKLIGHTS	Power to rear lamps
--	KEY SW PWR VT	Key switch power to virtual terminal

10.7.101.2 Hitch raise/lower switch



Fig. 573 Switch pinout

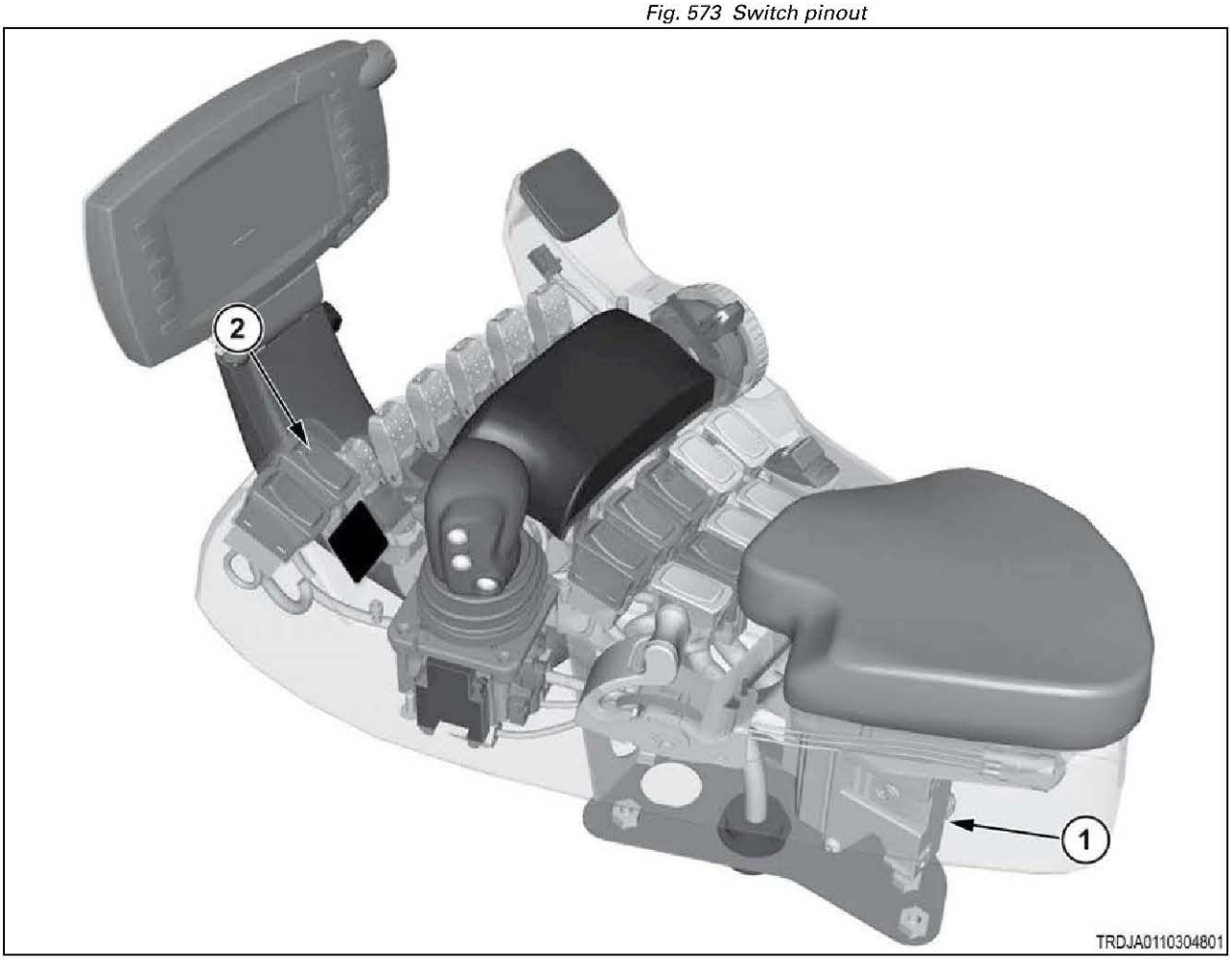

Fig. 574

(1)	Armrest module
(2)	Hitch raise/lower switch

10.7.102 Code SA 05 SPN 521474 FMI 05

Open circuit in the rear hitch raise switch circuit.

The switch is a momentary double-pole, double-throw (DPDT) type switch, except the "common" terminal is the data output instead of a power source. The 4 other contacts are connected to 3.33-volt power and 1.66-volt power. Operating the switch selects one of these voltages for the signal output. One set of contacts is for hitch raise, and the other set is for hitch lower. These 2 power circuits are shared by several other function switches on the armrest. This knowledge can aid in diagnosing the fault.

Diagnosis and solution

1. Determine when this error is reported.

a) Turn the key start switch to the on position.

b) Check whether the error code is reported as you operate the switch between on and off states.

Result

- The error is reported only when the switch is in the off position.

  The open circuit is in the 3.33V power circuit.

  See step 2 to isolate the location.
- The error is reported only when the switch is in the on position.

  The open circuit is in the 1.66V power circuit.

  See step 2 to isolate the location.
- The error is reported regardless of switch position.

  The open circuit is in the signal circuit.

  Repair or replace the armrest harness.

  See step 3 to validate the repair.

2. Isolate the power circuit open circuit.

a) Operate all upstream armrest switches, according to the list below, from their off to on positions.

Electrical sequence of switches, starting from the armrest module.

1. Shift Handle (3 pushbuttons)
2. Engine A/B switch
3. Autoguide switch
4. Creeper switch
5. Rear PTO
6. Roading Lock switch
7. Power management (cruise/full) switch
8. Hitch Raise/Work switch

b) Observe which other switches (if any) exhibit similar open circuit error codes.

Result

- At least one upstream switch reported a similar error.

  The open circuit lies at, or just upstream from, that switch.

  Repair or replace the armrest harness.

  See step 3 to validate the repair.

- No other switches reported similar errors.

  The switch is at fault.

  Replace the switch.

  See step 3 to validate the repair.

3. Check if the fault code remains.

a) Inspect and clean the harness connector contacts.
b) Connect all the connectors.
c) Turn the battery disconnect switch to the on position.
d) Turn the key start switch to the on position.
e) Operate the machine at low idle.
f) Check if the fault code remains.

Result

- SPN 521474 FMI 05 is not active.

  Stop.
- SPN 251474 FMI 05 is active.

  Failure of the armrest module is possible but not common. Exit the procedure and do the procedure again. If the fault code remains active, replace the armrest module.

  Stop.

10.7.102.1 Hitch raise/lower switch electrical schematic

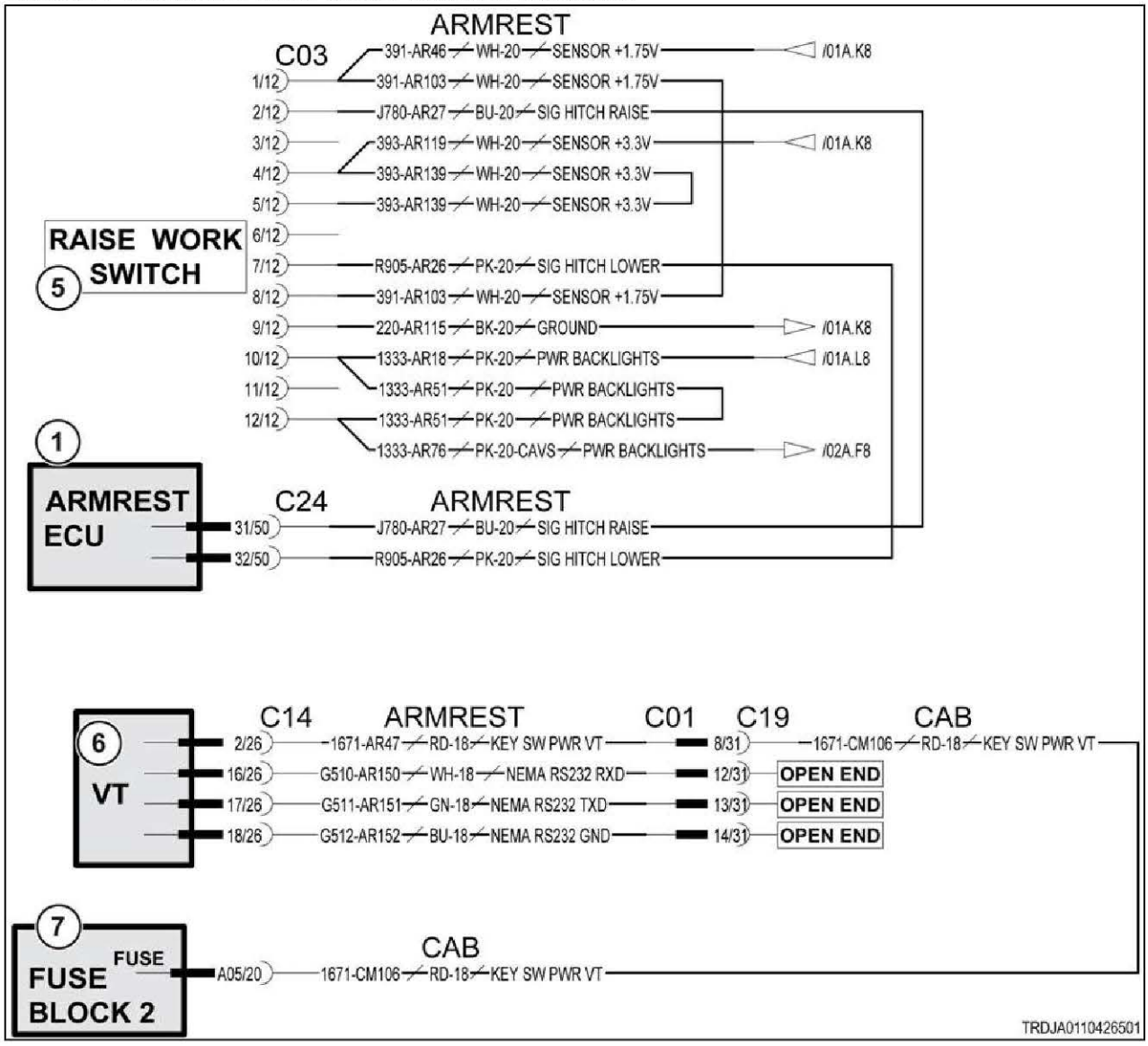

Fig. 575

Schematic legend		
Item	**Schematic term**	**Description**
1	ARMREST ECU	Armrest module
5	RAISE WORK SWITCH	Hitch raise/lower switch
6	VT	Virtual terminal
7	FUSE RELAY BLOCK 2	Fuse relay block 2
--	SIG HITCH RAISE	Signal hitch raise
--	SIG HITCH LOWER	Signal hitch lower
--	PWR BACKLIGHTS	Power to rear lamps
--	KEY SW PWR VT	Key switch power to virtual terminal

10.7.102.2 Hitch raise/lower switch



Fig. 576 Switch pinout

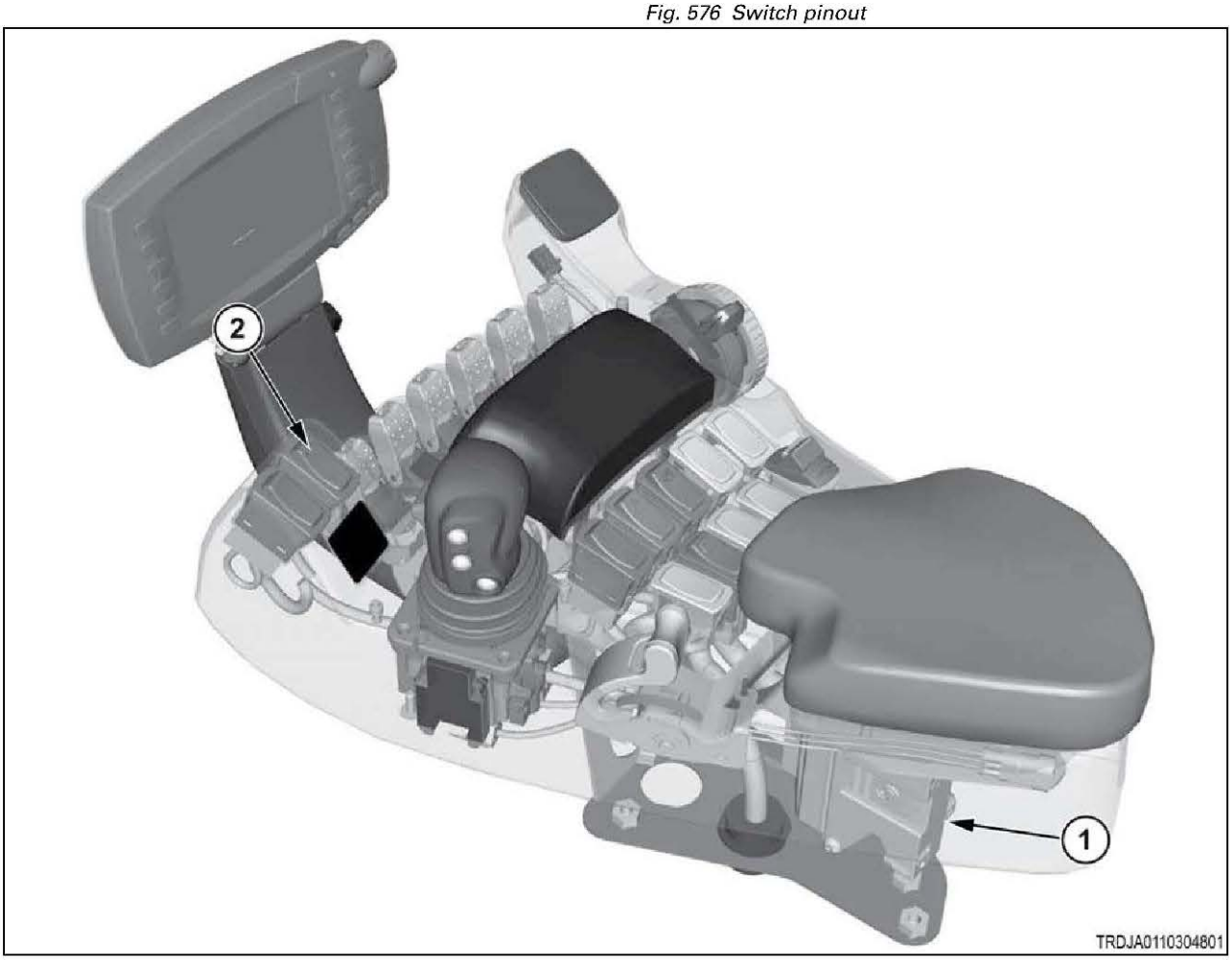

Fig. 577

(1)	Armrest module
(2)	Hitch raise/lower switch

10.7.103 Code SA 05 SPN 521893 FMI 03

The rear hitch lower switch signal voltage is above normal.

The signal voltage is higher than the 3.33-volt supply. The most likely cause is a short circuit to a higher voltage circuit.

The switch is a momentary double-pole, double-throw (DPDT) type switch, except the "common" terminal is the data output instead of a power source. The 4 other contacts are connected to 3.33-volt power and 1.66-volt power. Operating the switch selects one of these voltages for the signal output. One set of contacts for raise and one set for lower. This error will likely be accompanied by a power supply error too. This information can be used to isolate the cause.

Diagnosis and solution

1. Determine when this error is reported.

a) Turn the key start switch to the on position.

b) Check for this error code (SA 05 SPN 521893 FMI 03) as you operate the switch between the center position and hitch lower position.

Note that power supply errors will likely also be reported, as noted below.

Result

- The error is reported only when the switch is in the center position.

  Error code SA 05 SPN 3511 FMI 03 (3.33V power) is likely also reported.

  Diagnose the power supply error code first.

  Stop.
- The error is reported only when the switch is in the hitch lower position.

  Error code SA 05 SPN 3510 FMI 03 (1.66V power) is likely also reported.

  Diagnose the power supply error code first.

  Stop.
- The error is reported regardless of switch position.

  The signal wire is shorted to some voltage source.

  Repair or replace the harness.

  See step 2 to validate the repair.

2. Check if the diagnostic code remains.

a) Inspect and clean the harness connector contacts.

b) Connect all the connectors.

c) Turn the battery disconnect switch to the on position.

d) Turn the key start switch to the on position.

e) Operate the machine at low idle.

f) Check if the diagnostic code remains.

Result

- SPN 521893 FMI 03 is not active.

  Stop.
- SPN 521893 FMI 03 is active.

  Failure of the armrest module is possible but not common. Exit the procedure and do the procedure again. If the diagnostic code remains active, replace the module.

  Stop.

10.7.103.1 Hitch raise/lower switch electrical schematic

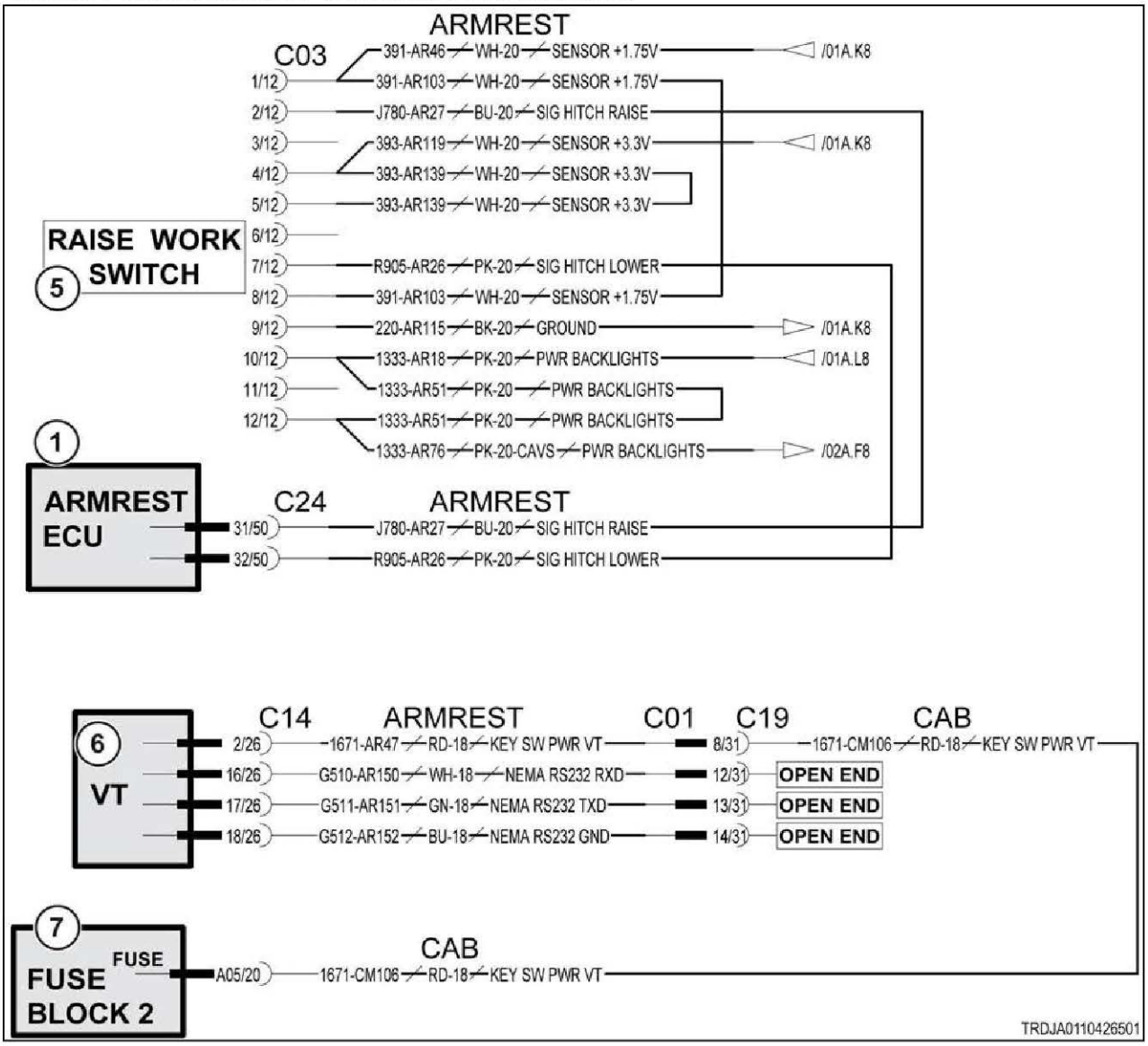

Fig. 578

Schematic legend		
Item	**Schematic term**	**Description**
1	ARMREST ECU	Armrest module
5	RAISE WORK SWITCH	Hitch raise/lower switch
6	VT	Virtual terminal
7	FUSE RELAY BLOCK 2	Fuse relay block 2
--	SIG HITCH RAISE	Signal hitch raise
--	SIG HITCH LOWER	Signal hitch lower
--	PWR BACKLIGHTS	Power to rear lamps
--	KEY SW PWR VT	Key switch power to virtual terminal

10.7.103.2 Hitch raise/lower switch



Fig. 579 Switch pinout

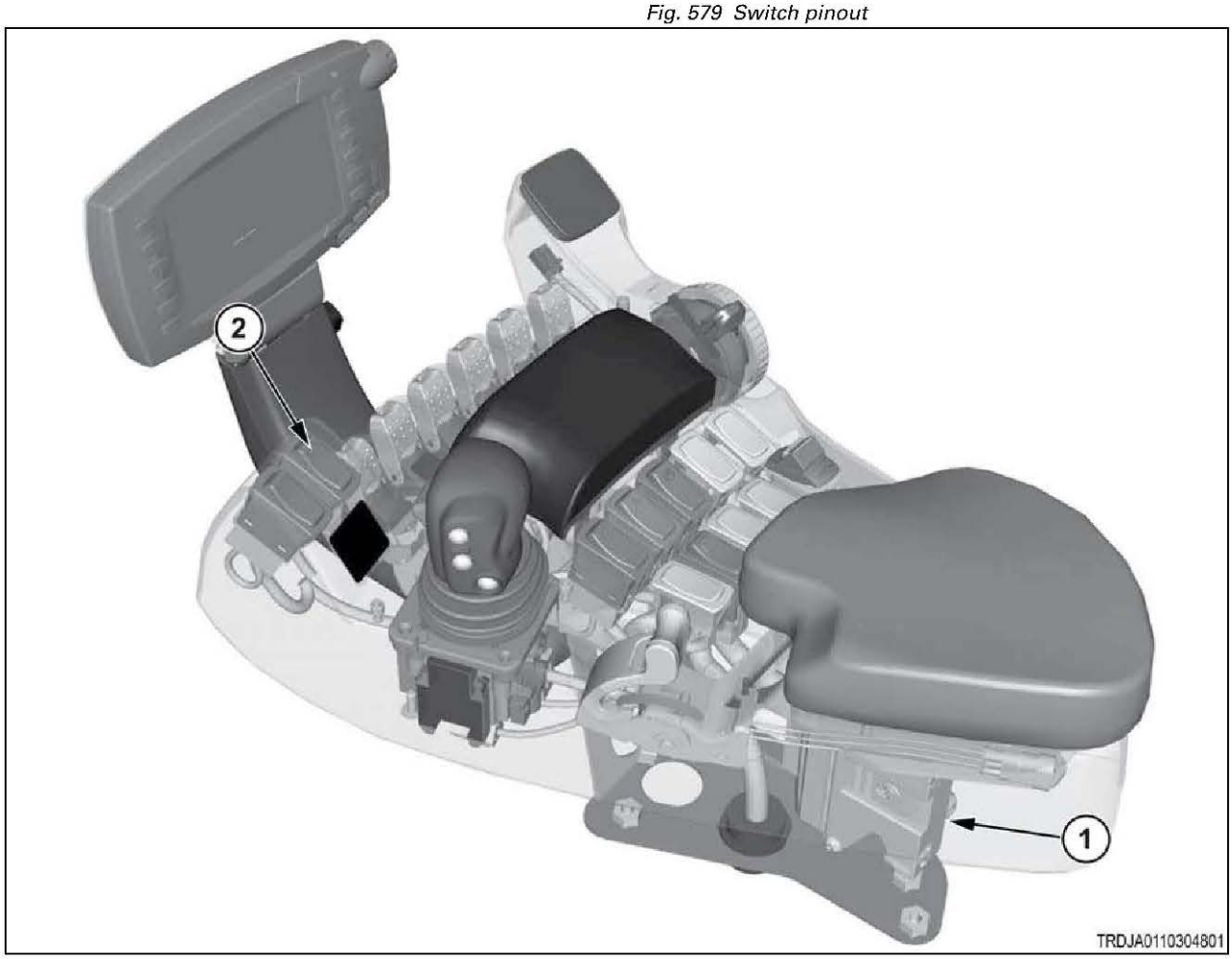

Fig. 580

(1)	Armrest module
(2)	Hitch raise/lower switch

10.7.104 Code SA 05 SPN 521893 FMI 04

The rear hitch lower switch signal voltage is below normal.

The signal voltage is lower than the 1.66-volt supply. The most likely cause is a short circuit to ground.

The switch is a momentary double-pole, double-throw (DPDT) type switch, except the "common" terminal is the data output instead of a power source. The 4 other contacts are connected to 3.33-volt power and 1.66-volt power. Operating the switch selects one of these voltages for the signal output. One set of contacts is for raise and one set for lower. This error will likely be accompanied by a power supply error too. This information can be used to isolate the cause.

Diagnosis and solution

1. Determine when this error is reported.

a) Turn the key start switch to the on position.

b) Check for this error code (SA 05 SPN 521893 FMI 04) as you operate the switch between the center position and lower position.

Note that power supply errors will likely also be reported, as noted below.

Result

- The error is reported only when the switch is in the center position.

  Error code SA 05 SPN 3511 FMI 04 (3.33V power) is likely also reported.

  Diagnose the power supply error code first.

  Stop.
- The error is reported only when the switch is in the lower position.

  Error code SA 05 SPN 3510 FMI 04 (1.66V power) is likely also reported.

  Diagnose the power supply error code first.

  Stop.
- The error is reported regardless of switch position.

  The signal wire is shorted to ground.

  Repair or replace the harness.

  See step 2 to validate the repair.

2. Check if the diagnostic code remains.

a) Inspect and clean the harness connector contacts.

b) Connect all the connectors.

c) Turn the battery disconnect switch to the on position.

d) Turn the key start switch to the on position.

e) Operate the machine at low idle.

f) Check if the diagnostic code remains.

Result

- SPN 521893 FMI 04 is not active.

  Stop.
- SPN 521893 FMI 04 is active.

  Failure of the armrest module is possible but not common. Exit the procedure and do the procedure again. If the diagnostic code remains active, replace the module.

  Stop.

10.7.104.1 Hitch raise/lower switch electrical schematic

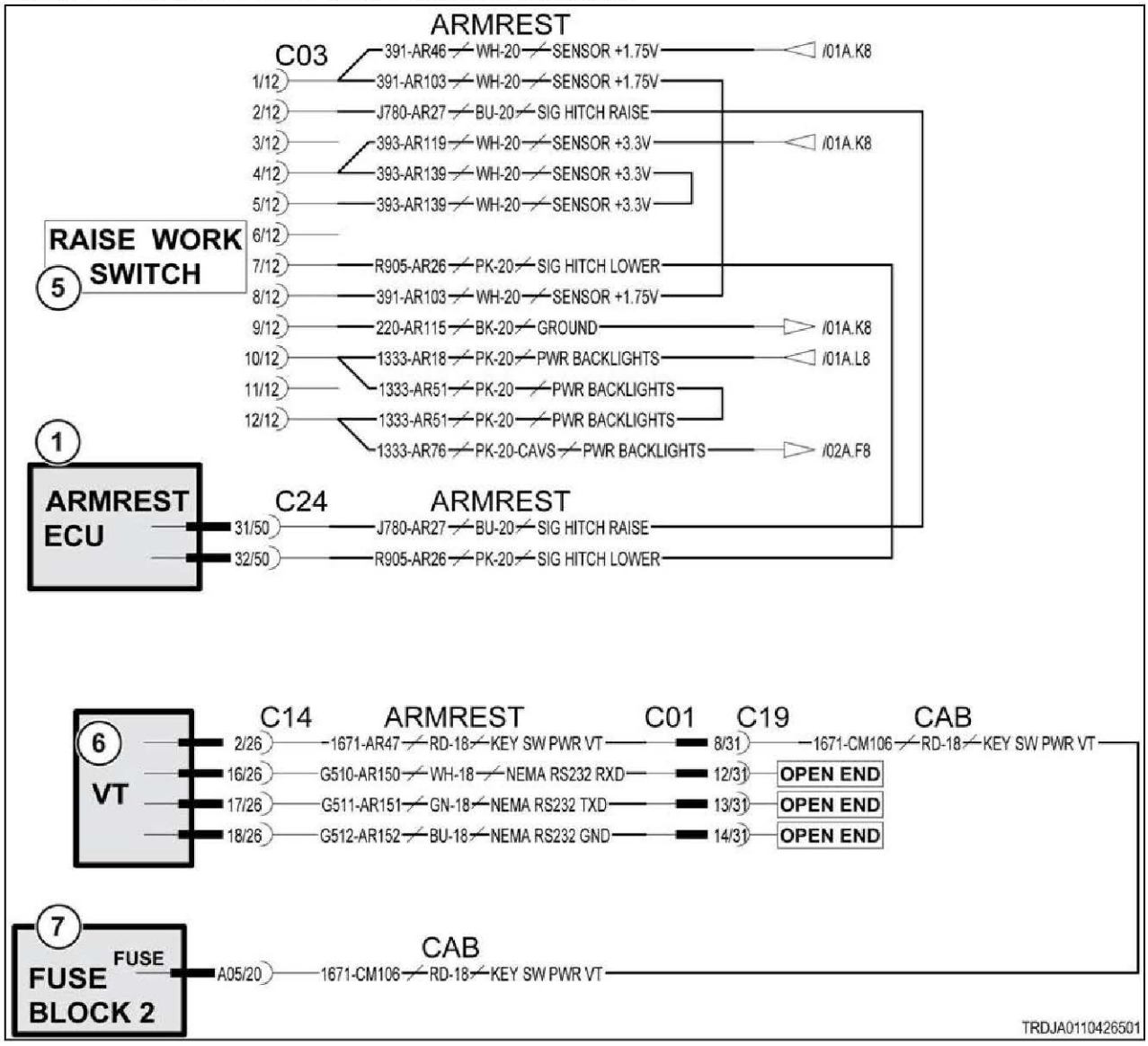

Fig. 581

Schematic legend		
Item	**Schematic term**	**Description**
1	ARMREST ECU	Armrest module
5	RAISE WORK SWITCH	Hitch raise/lower switch
6	VT	Virtual terminal
7	FUSE RELAY BLOCK 2	Fuse relay block 2
--	SIG HITCH RAISE	Signal hitch raise
--	SIG HITCH LOWER	Signal hitch lower
--	PWR BACKLIGHTS	Power to rear lamps
--	KEY SW PWR VT	Key switch power to virtual terminal

10.7.104.2 Hitch raise/lower switch



Fig. 582 Switch pinout

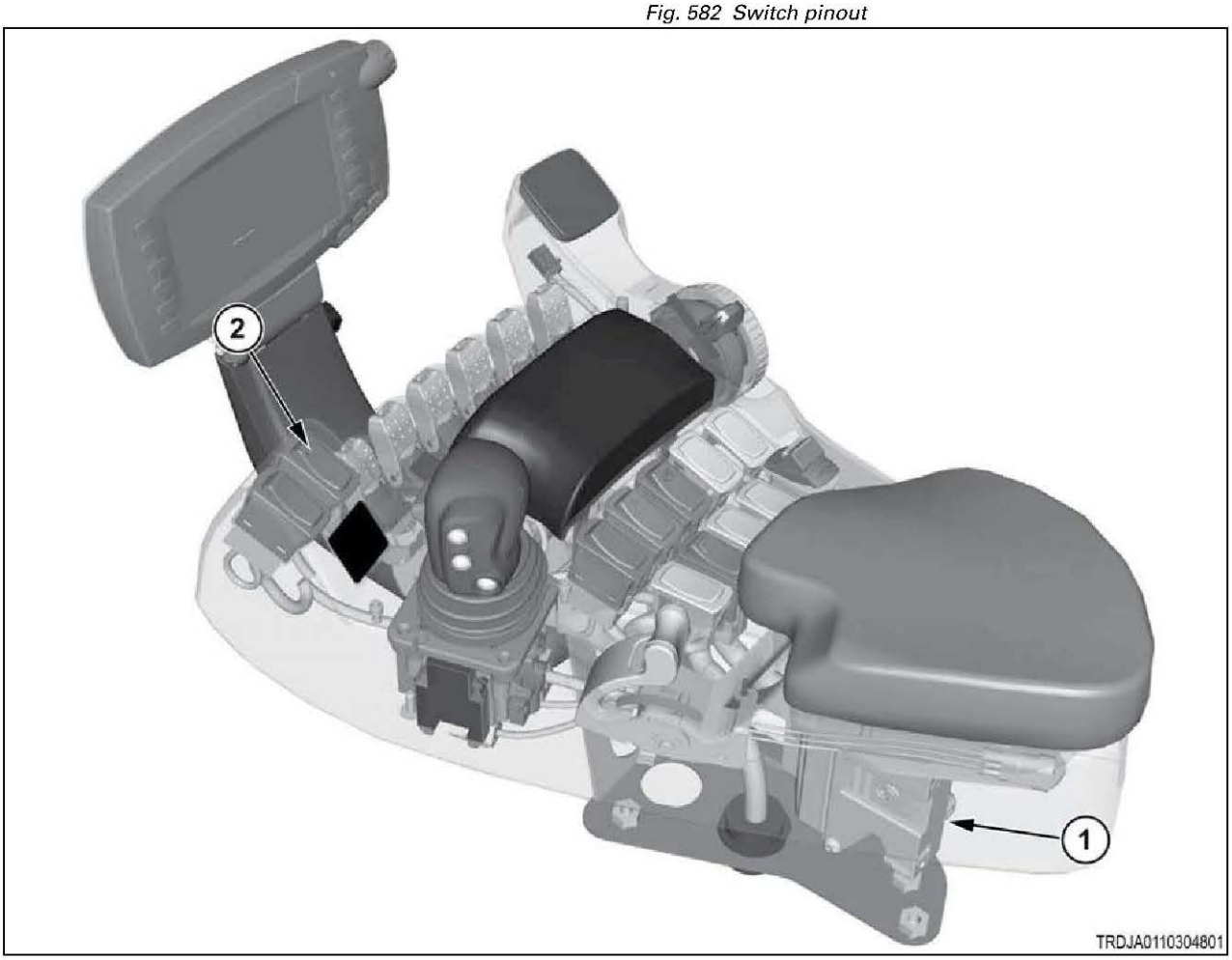

Fig. 583

(1)	Armrest module
(2)	Hitch raise/lower switch

10.7.105 Code SA 05 SPN 521893 FMI 05

Open circuit in the rear hitch lower switch circuit.

The switch is a momentary double-pole, double-throw (DPDT) type switch, except the "common" terminal is the data output instead of a power source. The 4 other contacts are connected to 3.33-volt power and 1.66-volt power. Operating the switch selects one of these voltages for the signal output. One set of contacts is for hitch raise, and the other set is for hitch lower. These 2 power circuits are shared by several other function switches on the armrest. This knowledge can aid in diagnosing the fault.

Diagnosis and solution

1. Determine when this error is reported.

a) Turn the key start switch to the on position.

b) Check whether the error code is reported as you operate the switch between on and off states.

Result

- The error is reported only when the switch is in the off position.

  The open circuit is in the 3.33V power circuit.

  See step 2 to isolate the location.
- The error is reported only when the switch is in the on position.

  The open circuit is in the 1.66V power circuit.

  See step 2 to isolate the location.
- The error is reported regardless of switch position.

  The open circuit is in the signal circuit.

  Repair or replace the armrest harness.

  See step 3 to validate the repair.

2. Isolate the power circuit open circuit.

a) Operate all upstream armrest switches, according to the list below, from their off to on positions.

Electrical sequence of switches, starting from the armrest module.

1. Shift Handle (3 pushbuttons)
2. Engine A/B switch
3. Autoguide switch
4. Creeper switch
5. Rear PTO
6. Roading Lock switch
7. Power management (cruise/full) switch
8. Hitch Raise/Work switch

b) Observe which other switches (if any) exhibit similar open circuit error codes.

Result

- At least one upstream switch reported a similar error.

  The open circuit lies at, or just upstream from, that switch.

  Repair or replace the armrest harness.

  See step 3 to validate the repair.

- No other switches reported similar errors.

  The switch is at fault.

  Replace the switch.

  See step 3 to validate the repair.

3. Check if the fault code remains.

a) Inspect and clean the harness connector contacts.
b) Connect all the connectors.
c) Turn the battery disconnect switch to the on position.
d) Turn the key start switch to the on position.
e) Operate the machine at low idle.
f) Check if the fault code remains.

Result

- SPN 521893 FMI 05 is not active.

  Stop.
- SPN 251893 FMI 05 is active.

  Failure of the armrest module is possible but not common. Exit the procedure and do the procedure again. If the fault code remains active, replace the armrest module.

  Stop.

10.7.105.1 Hitch raise/lower switch electrical schematic

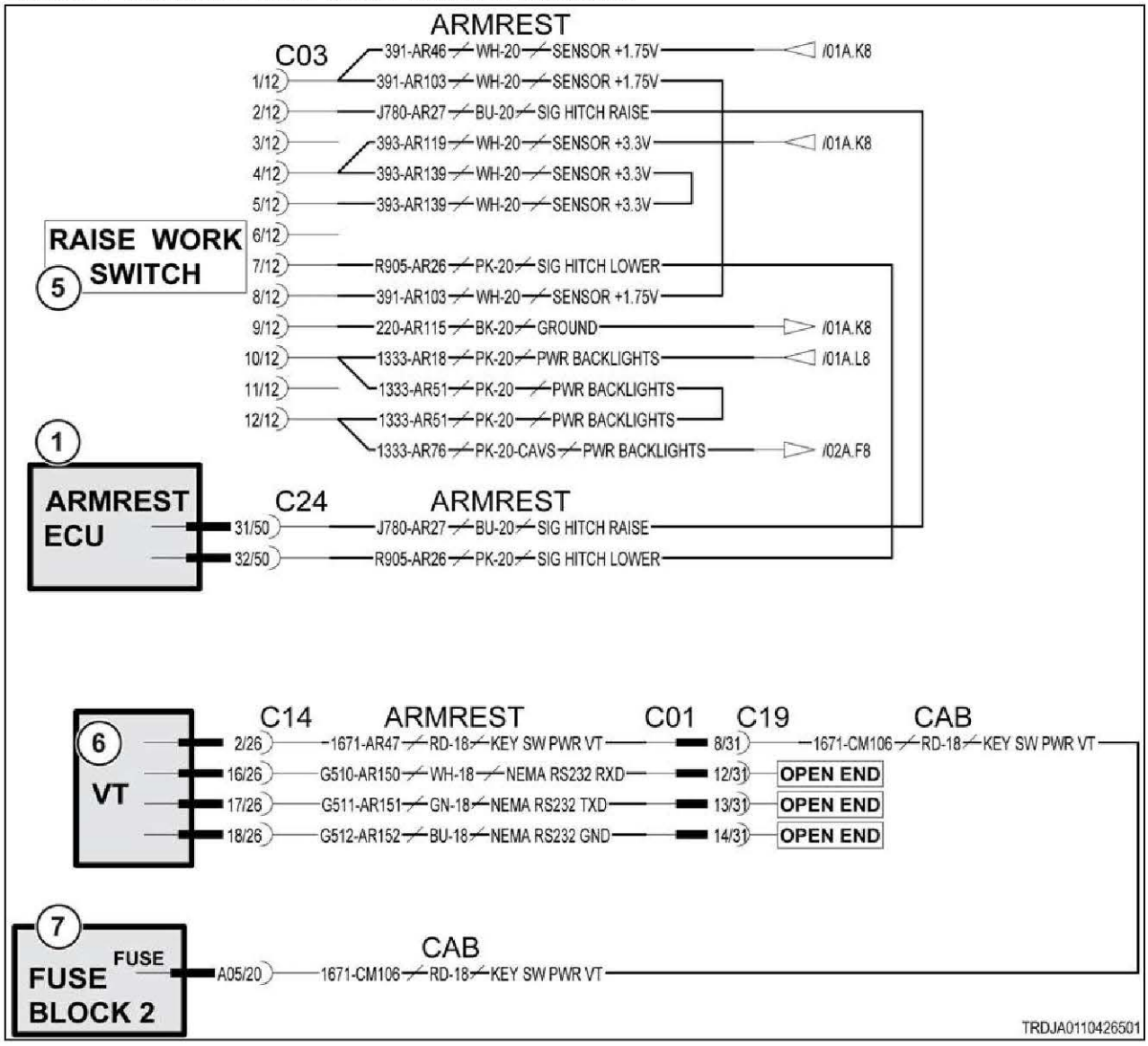

Fig. 584

Schematic legend		
Item	**Schematic term**	**Description**
1	ARMREST ECU	Armrest module
5	RAISE WORK SWITCH	Hitch raise/lower switch
6	VT	Virtual terminal
7	FUSE RELAY BLOCK 2	Fuse relay block 2
--	SIG HITCH RAISE	Signal hitch raise
--	SIG HITCH LOWER	Signal hitch lower
--	PWR BACKLIGHTS	Power to rear lamps
--	KEY SW PWR VT	Key switch power to virtual terminal

10.7.105.2 Hitch raise/lower switch



Fig. 585 Switch pinout

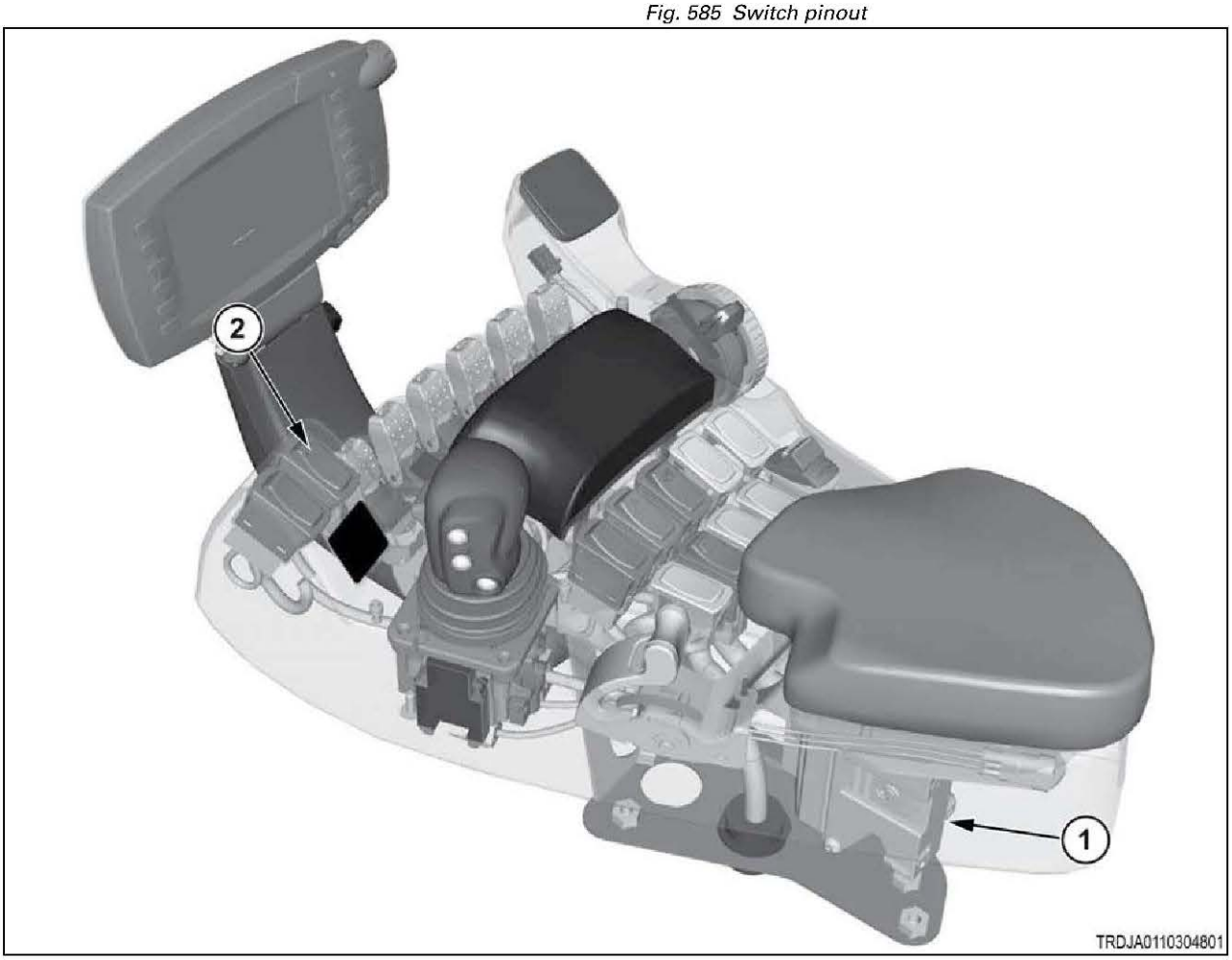

Fig. 586

(1)	Armrest module
(2)	Hitch raise/lower switch

10.7.106 Code SA 05 SPN 521894 FMI 03

The power take-off disengage switch signal voltage is above normal.

The signal voltage is higher than the 3.33-volt supply. The most likely cause is a short circuit to a higher voltage circuit.

The switch is a double-pole, double-throw (DPDT) type switch, except the "common" terminal is the data output instead of a power source. The 4 other contacts are connected to 3.33-volt power and 1.66-volt power. Operating the switch selects one of these voltages for the signal output. One set of contacts is for PTO engage and the other set for PTO disengage. This error will likely be accompanied by a power supply error too. This information can be used to isolate the cause.

Diagnosis and solution

1. Determine when this error is reported.

a) Turn the key start switch to the on position.

b) Check for this error code (SA 05 SPN 521894 FMI 03) as you operate the switch between the off position and on position.

Note that power supply errors will likely also be reported, as noted below.

Result

- The error is reported only when the switch is in the PTO-on position.

  Error code SA 05 SPN 3511 FMI 03 (3.33V power) is likely also reported.

  Diagnose the power supply error code first.

  Stop.
- The error is reported only when the switch is in the PTO-off position.

  Error code SA 05 SPN 3510 FMI 03 (1.66V power) is likely also reported.

  Diagnose the power supply error code first.

  Stop.
- The error is reported regardless of switch position.

  The signal wire is shorted to some voltage source.

  Repair or replace the harness.

  See step 2 to validate the repair.

2. Check if the diagnostic code remains.

a) Inspect and clean the harness connector contacts.

b) Connect all the connectors.

c) Turn the battery disconnect switch to the on position.

d) Turn the key start switch to the on position.

e) Operate the machine at low idle.

f) Check if the diagnostic code remains.

Result

- SPN 521894 FMI 03 is not active.

  Stop.
- SPN 521894 FMI 03 is active.

  Failure of the armrest module is possible but not common. Exit the procedure and do the procedure again. If the diagnostic code remains active, replace the module.

  Stop.

10.7.106.1 Power take-off switch electrical schematic

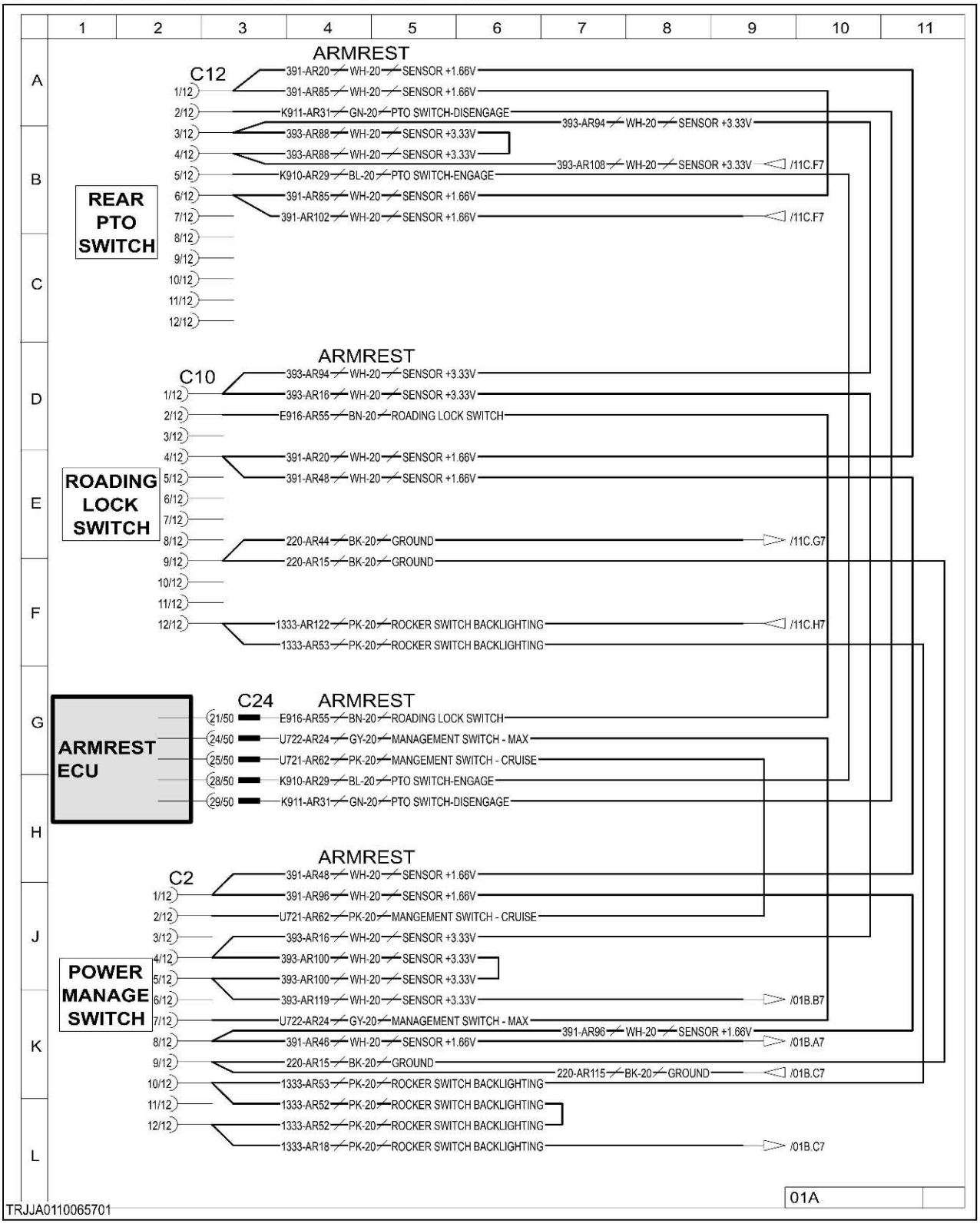

Fig. 587

10.7.106.2 Power take-off switch



Fig. 588 Switch pinout

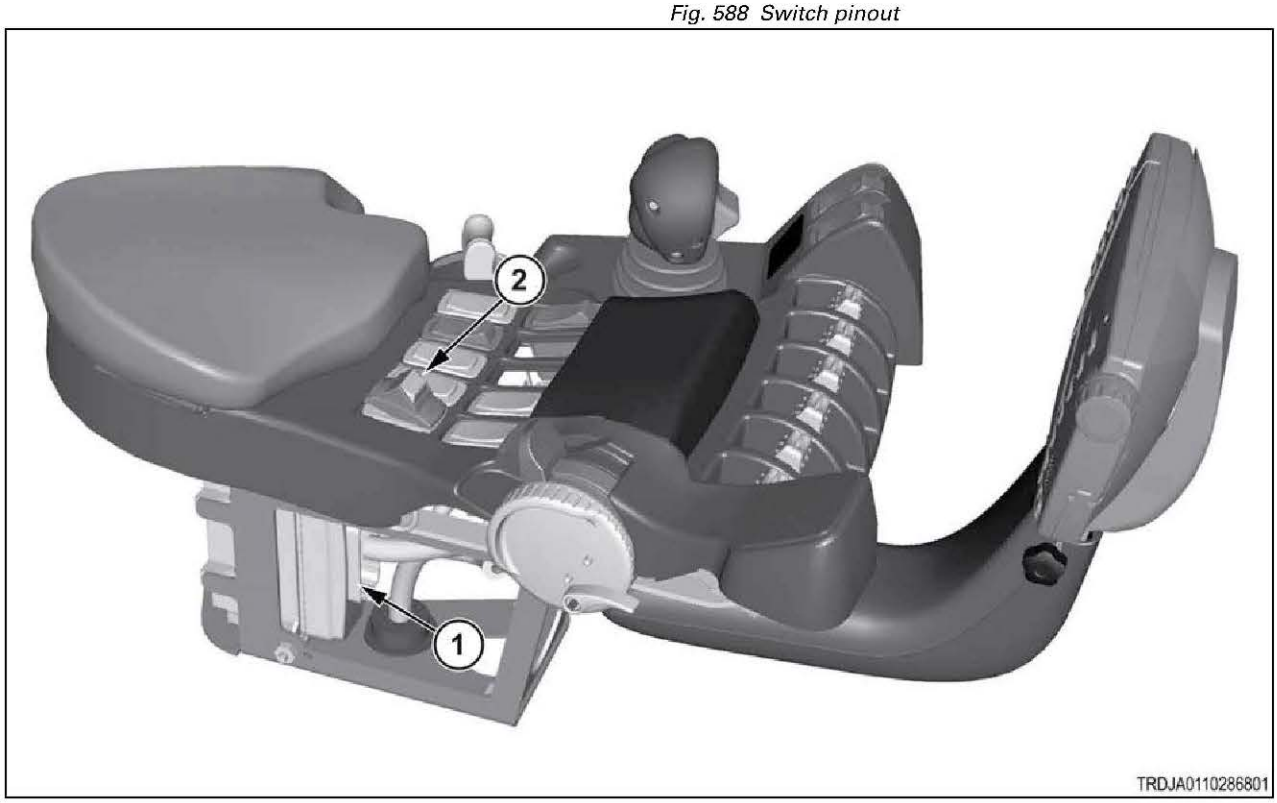

Fig. 589

(1)	Armrest module
(2)	Power take-off switch

10.7.107 Code SA 05 SPN 521894 FMI 04

The power take-off disengage switch signal voltage is below normal.

The signal voltage is lower than the 1.66-volt supply. The most likely cause is a short circuit to ground.

The switch is a double-pole, double-throw (DPDT) type switch, except the "common" terminal is the data output instead of a power source. The 4 other contacts are connected to 3.33-volt power and 1.66-volt power. Operating the switch selects one of these voltages for the signal output. One set of contacts is for PTO engage and the other set for PTO disengage. This error will likely be accompanied by a power supply error too. This information can be used to isolate the cause.

Diagnosis and solution

1. Determine when this error is reported.

a) Turn the key start switch to the on position.

b) Check for this error code (SA 05 SPN 521894 FMI 04) as you operate the switch between the center position and PTO disengage position.

Note that power supply errors will likely also be reported, as noted below.

Result

- The error is reported only when the switch is in the center position.

  Error code SA 05 SPN 3511 FMI 04 (3.33V power) is likely also reported.

  Diagnose the power supply error code first.

  Stop.
- The error is reported only when the switch is in the PTO disengage position.

  Error code SA 05 SPN 3510 FMI 04 (1.66V power) is likely also reported.

  Diagnose the power supply error code first.

  Stop.
- The error is reported regardless of switch position.

  The signal wire is shorted to ground.

  Repair or replace the harness.

  See step 2 to validate the repair.

2. Check if the diagnostic code remains.

a) Inspect and clean the harness connector contacts.

b) Connect all the connectors.

c) Turn the battery disconnect switch to the on position.

d) Turn the key start switch to the on position.

e) Operate the machine at low idle.

f) Check if the diagnostic code remains.

Result

- SPN 521894 FMI 04 is not active.

  Stop.
- SPN 521894 FMI 04 is active.

  Failure of the armrest module is possible but not common. Exit the procedure and do the procedure again. If the diagnostic code remains active, replace the module.

  Stop.

10.7.107.1 Power take-off switch electrical schematic

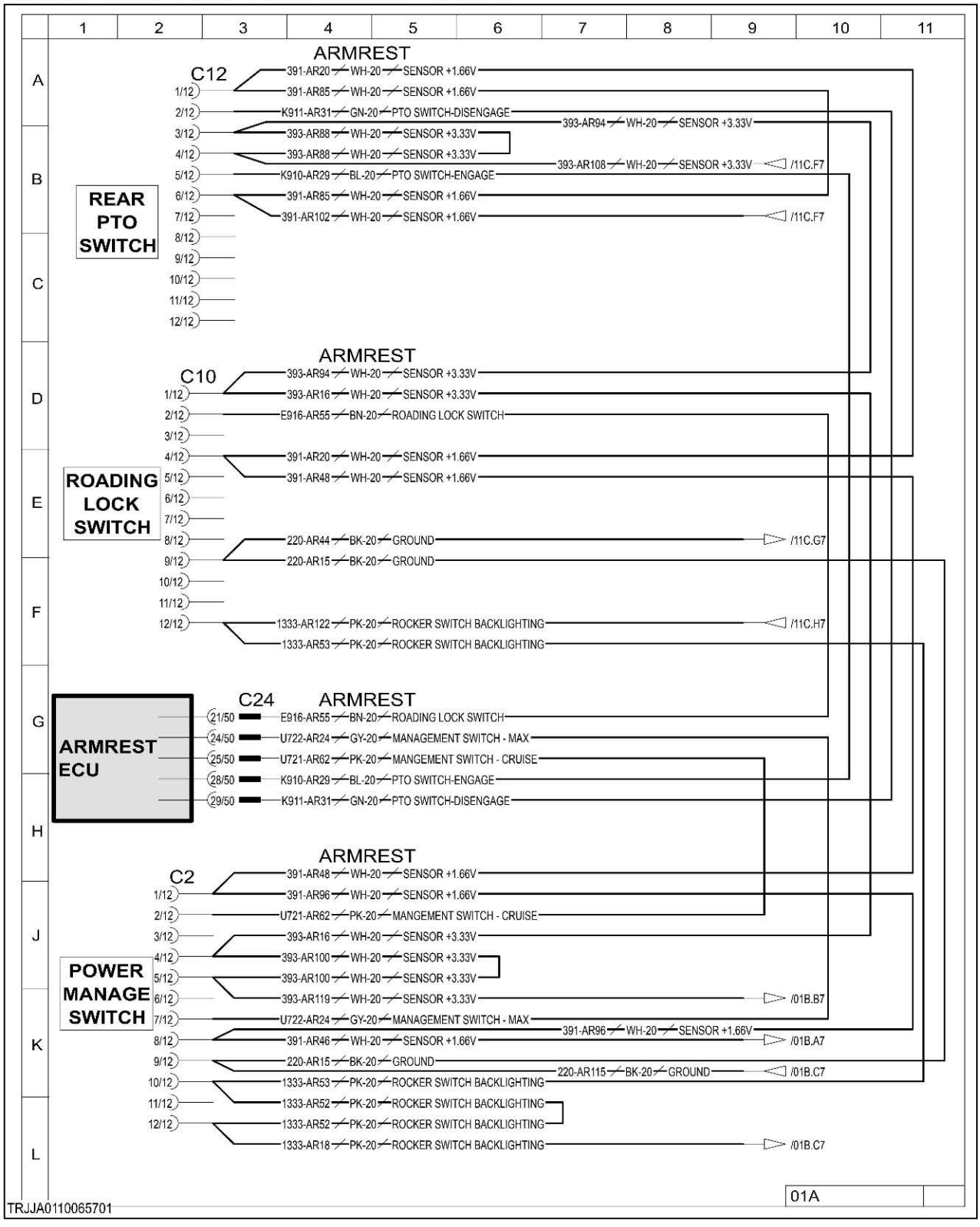

Fig. 590

10.7.107.2 Power take-off switch



Fig. 591 Switch pinout

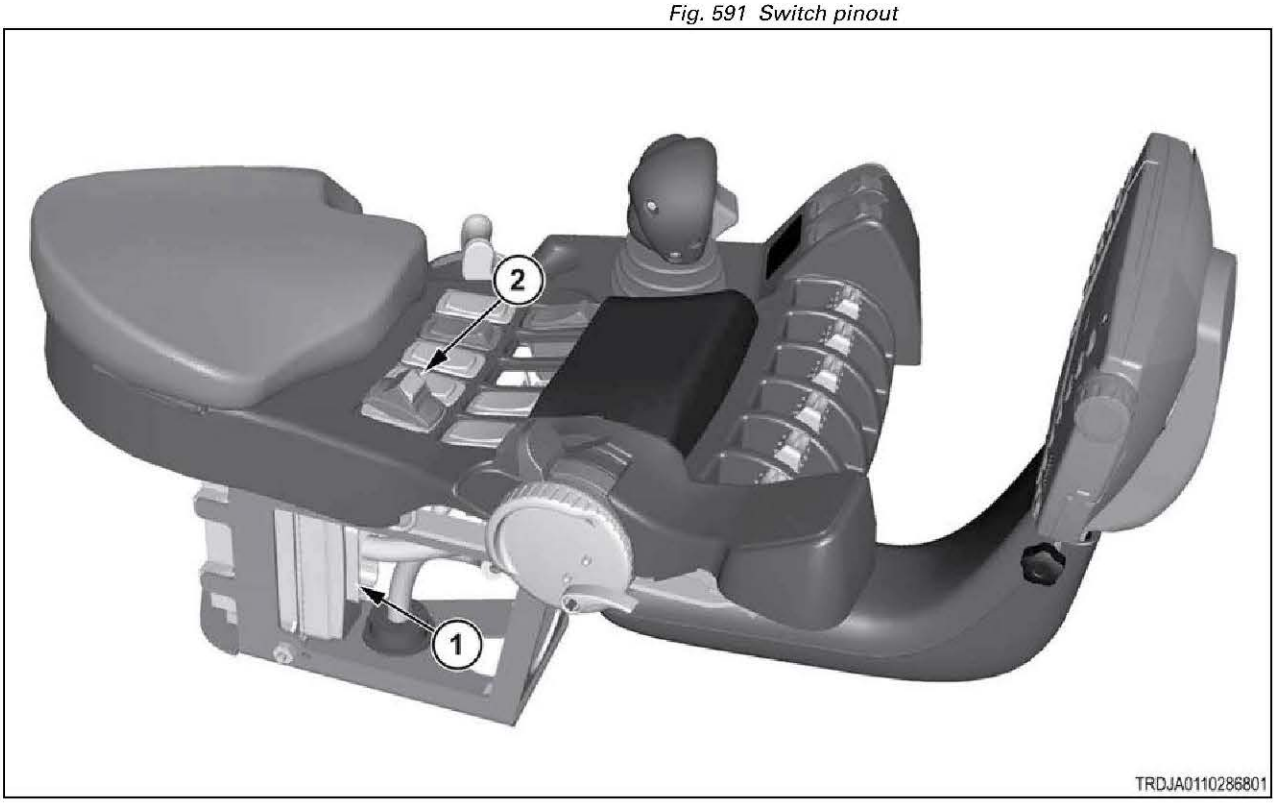

Fig. 592

(1)	Armrest module
(2)	Power take-off switch

10.7.108 Code SA 05 SPN 521894 FMI 05

Open circuit in the power takeoff, disengage switch circuit.

The switch is a double-pole, double-throw (DPDT) type switch, except the "common" terminal is the data output instead of a power source. The 4 other contacts are connected to 3.33-volt power and 1.66-volt

power. Operating the switch selects one of these voltages for the signal output. One set of contacts is for PTO engage and the other set for PTO disengage. These 2 power circuits are shared by several other function switches on the armrest. This knowledge can aid in diagnosing the fault.

Diagnosis and solution

1. Determine when this error is reported.

a) Turn the key start switch to the on position.

b) Check whether the error code is reported as you operate the switch between on and off states.

Result

- The error is reported only when the switch is in the off position.

  The open circuit is in the 3.33V power circuit.

  See step 2 to isolate the location.
- The error is reported only when the switch is in the on position.

  The open circuit is in the 1.66V power circuit.

  See step 2 to isolate the location.
- The error is reported regardless of switch position.

  The open circuit is in the signal circuit.

  Repair or replace the armrest harness.

  See step 3 to validate the repair.

2. Isolate the power circuit open circuit.

a) Operate all upstream (and at least one downstream) armrest switches, according to the list below, from their off to on positions.

Electrical sequence of switches, starting from the armrest module.

1. Shift Handle (3 pushbuttons)
2. Engine A/B switch
3. Autoguide switch
4. Creeper switch
5. Rear PTO
6. Roading Lock switch
7. Power management (cruise/full) switch
8. Hitch Raise/Work switch

b) Observe which other switches (if any) exhibit similar open circuit error codes.

Result

- At least one upstream switch reported a similar error.

  The open circuit lies at, or just upstream from, that switch.

  Repair or replace the armrest harness.

  See step 3 to validate the repair.
- Only downstream switches reported similar errors.

  The harness is open circuited at this switch location.

  Repair or replace the harness.

  See step 3 to validate the repair.

- No other switches reported similar errors.

  The switch is at fault.

  Replace the switch.

  See step 3 to validate the repair.

3. Check if the fault code remains.

a) Inspect and clean the harness connector contacts.
b) Connect all the connectors.
c) Turn the battery disconnect switch to the on position.
d) Turn the key start switch to the on position.
e) Operate the machine at low idle.
f) Check if the fault code remains.

Result

- SPN 521894 FMI 05 is not active.

  Stop.
- SPN 521894 FMI 05 is active.

  Failure of the armrest module is possible but not common. Exit the procedure and do the procedure again. If the fault code remains active, replace the armrest module.

  Stop.

10.7.108.1 Power take-off switch electrical schematic

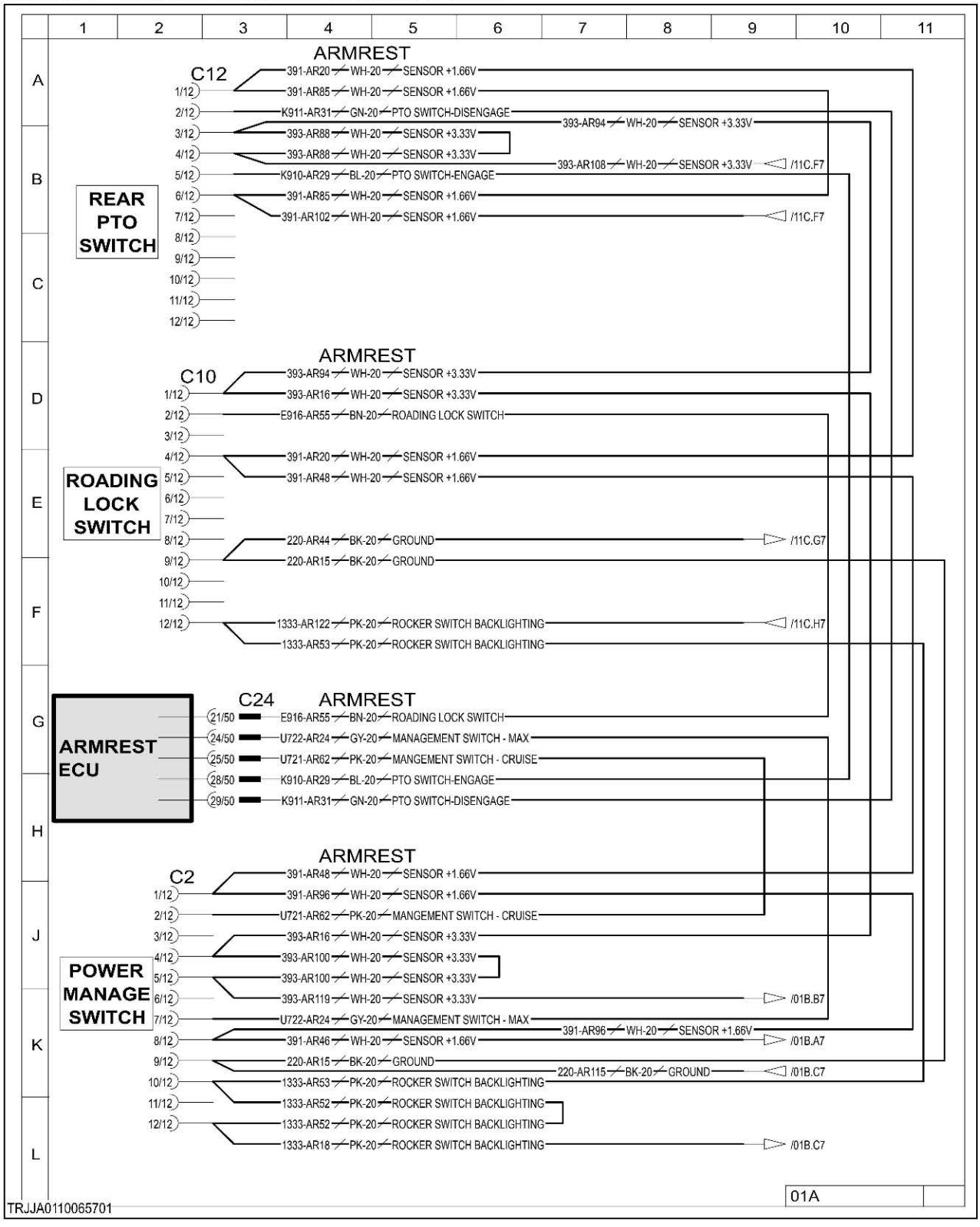

Fig. 593

10.7.108.2 Power take-off switch



Fig. 594 Switch pinout

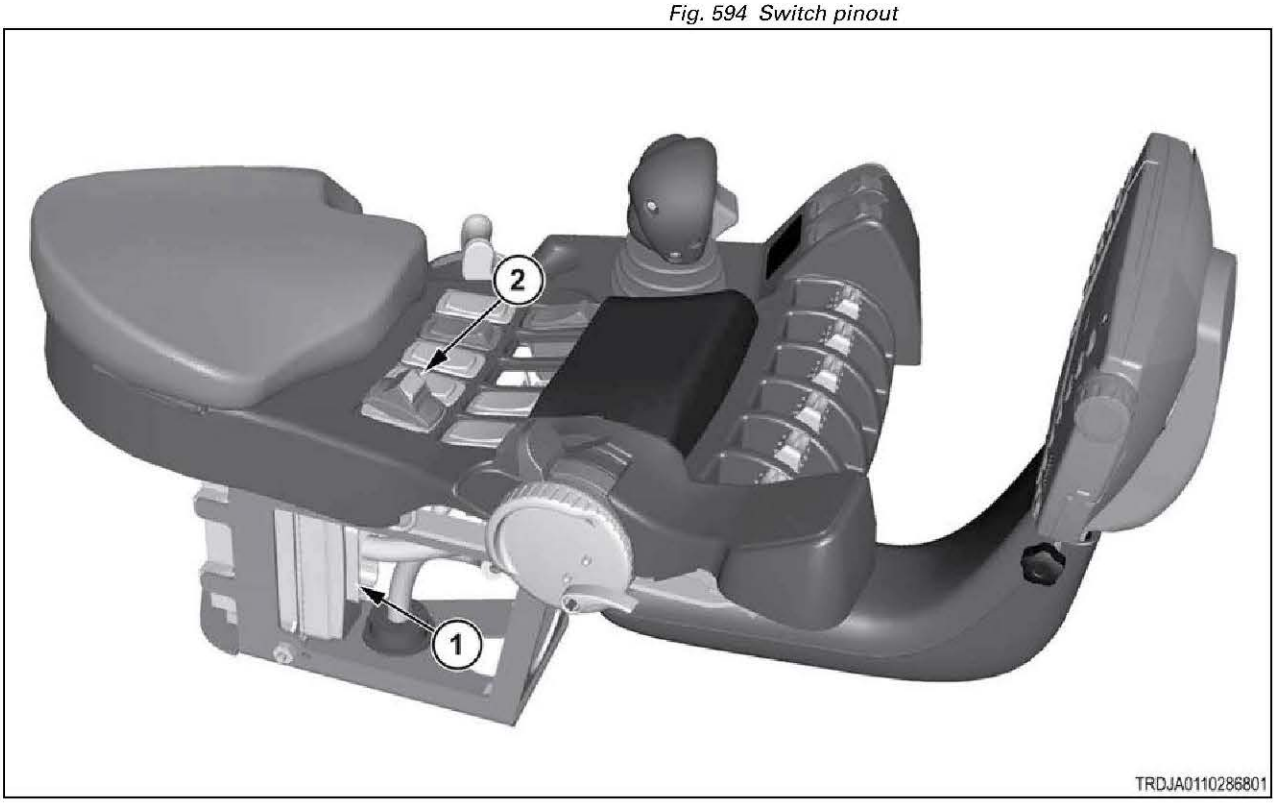

Fig. 595

(1)	Armrest module
(2)	Power take-off switch

10.8 19 Steering valve module

10.8.1 Code SA 19 SPN 84 FMI 12

The steering controller is not receiving the vehicle speed data.

Wheel-based vehicle speed CAN signal is not available on the CAN bus.

Procedure

1. Verify hardware and software part numbers.

   Result

   Expected result - part numbers are correct.

   - Yes - part numbers are correct.

     step 2
   - No - part numbers are not correct.

     Entering the correct part numbers.

     Flash appropriate machine software.

     step 4

2. Check for power at module .
   a) Turn the battery disconnect switch to the on position.
   b) Turn the key start switch to the on position but do not start the engine.
   c) Check voltage from module connector contact 3 to frame ground.

   Result

   Expected result - voltage is 12 volts.

   Results:

   - Yes - voltage is 12 Volts.

     step 3
   - No - voltage is not 12 volts.

     Repair or replace the harness.

     step 4

3. Check for short circuit to ground.
   a) Turn the key start switch to the off position.
   b) Turn the battery disconnect switch to the off position.
   c) Remove the key from the battery disconnect switch.
   d) Check resistance from module connector contact 3 to frame ground.

   Result

   Expected result - the resistance measurement are open circuit.

   Results:

   - Yes - the resistance measurement are open circuit.

     step 4
   - No - the resistance measurement are open circuit.

     Repair or replace the harness.

     step 4

4. Check for damaged connector or module.

a) Turn the key start switch to the off position.
b) Turn the battery disconnect switch to the off position.
c) Remove the key from the battery disconnect switch.
d) Inspect the valve solenoid connections.

Result

Expected result - connections are good.

Results:

- Yes - connections are good.

  step 4
- No - connections are not good.

  Repair or replace the harness or the connector contacts.

  step 4

5. Check if the diagnostic code remains.

a) Check and clean the harness connector contacts.
b) Connect all the connectors.
c) Turn the battery disconnect switch to the on position.
d) Turn the key start switch to the on position.
e) Operate the machine at low idle.
f) Check if the diagnostic code remains.

Result

Expected result - the diagnostic code is not active.

Results:

- Yes - SPN 84 FMI 12 is not active.

  Stop.
- No - SPN 84 FMI 12 is active.

  Failure of the steering module is possible but not common. Exit the procedure and do the procedure again. If the diagnostic code remains active, replace the module.

  Stop.

10.8.1.1 Steering assist module electrical schematic

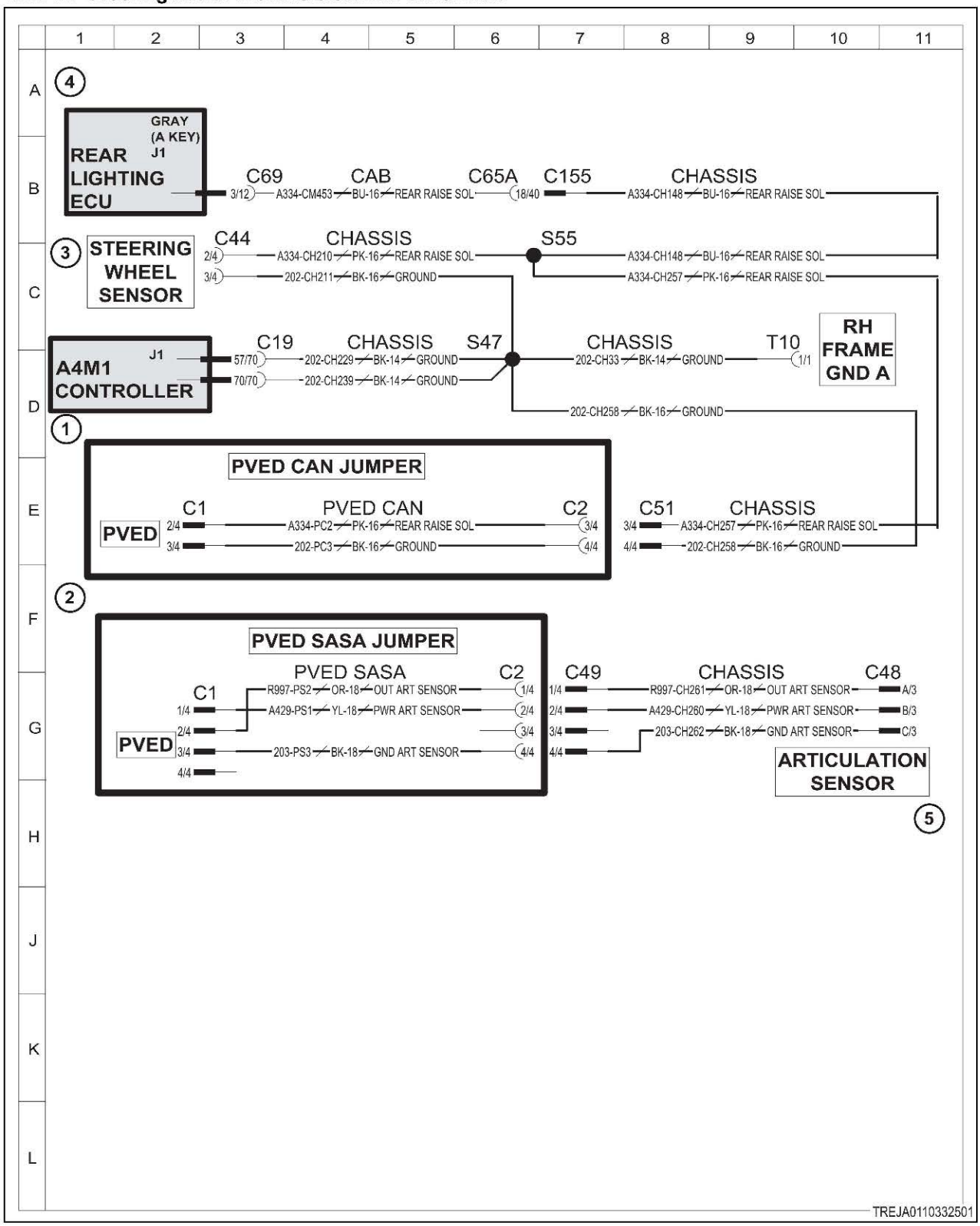

Fig. 596 Steering assist module schematic

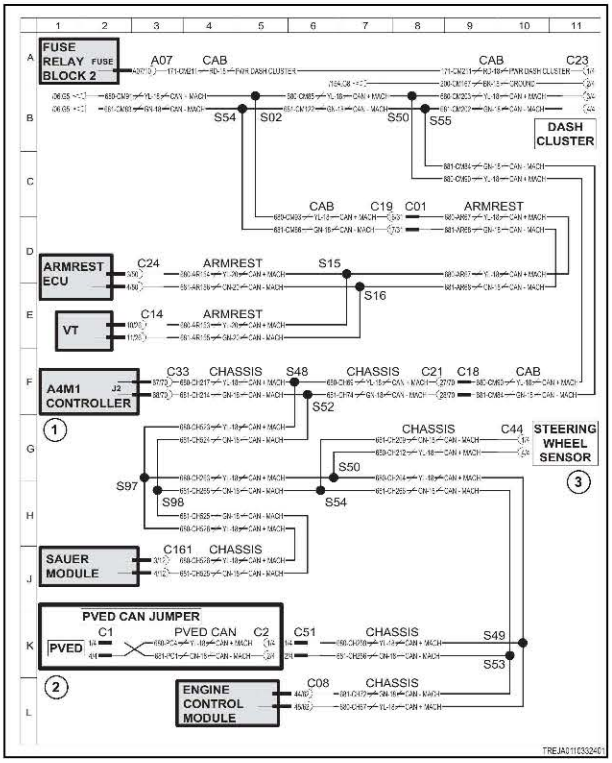

Fig. 597

10.8.2 Code SA 19 SPN 611 FMI 00

The steering wheel position sensor above normal operational range.

The steering module has detected the steering sensor set points are invalid or do not match. The steering controller is not receiving expected sensor signal or signals or signal timing not valid

Diagnosis and solution

1. Check for power at the steering wheel sensor .

a) Turn the battery disconnect switch to the on position.

b) Turn the key start switch to the on position but do not start the engine.

c) Check the voltage from the steering wheel sensor connector contact 2 to frame ground.

Result

Expected result - voltage is 12 volts.

Results:

- Yes - voltage is 12 Volts.

  step 2
- No - voltage is not 12 volts.

  Repair or replace the harness.

  step 4

2. Check for short circuit to ground.

a) Turn the key start switch to the off position.

b) Turn the battery disconnect switch to the off position.

c) Remove the key from the battery disconnect switch.

d) Check resistance from the steering wheel sensor connector contact 3 to frame ground.

Result

Expected result - the resistance measurement are open circuit.

Results:

- Yes - the resistance measurement are open circuit.

  step 3
- No - the resistance measurement are open circuit.

  Repair or replace the harness.

  step 4

3. Check the steering wheel sensor CAN harness.

a) Check the voltage from the steering wheel sensor connector contact 1 to frame ground.

Result

Expected result - the voltage is between 2.3 volts and 2.5 volts.

Results:

- Yes - the voltage is between 2.3 volts and 2.5 volts.

  step 3
- No - the voltage is not between 2.3 volts and 2.5 volts.

  Repair or replace the harness.

  step 4

b) Check the voltage from the steering wheel sensor connector contact 4 to frame ground.

Result

Expected result - the voltage is between 2.5 volts and 2.7 volts.

Results:

- Yes - the voltage is between 2.5 volts and 2.7 volts.

  step 3
- No - the voltage is not between 2.5 volts and 2.7 volts.

  Repair or replace the harness.

  step 4

4. Check if the diagnostic code remains.

a) Check and clean the harness connector contacts.
b) Connect all the connectors.
c) Turn the battery disconnect switch to the on position.
d) Turn the key start switch to the on position.
e) Operate the machine at low idle.
f) Check if the diagnostic code remains.

Result

Expected result - the diagnostic code is not active.

Results:

- Yes - SPN 611 FMI 00 is not active.

  Stop.
- No - SPN 611 FMI 00 is active.

  Failure of the steering module is possible but not common. Exit the procedure and do the procedure again. If the diagnostic code remains active, replace the module.

  Stop.

10.8.2.1 Steering assist module electrical schematic

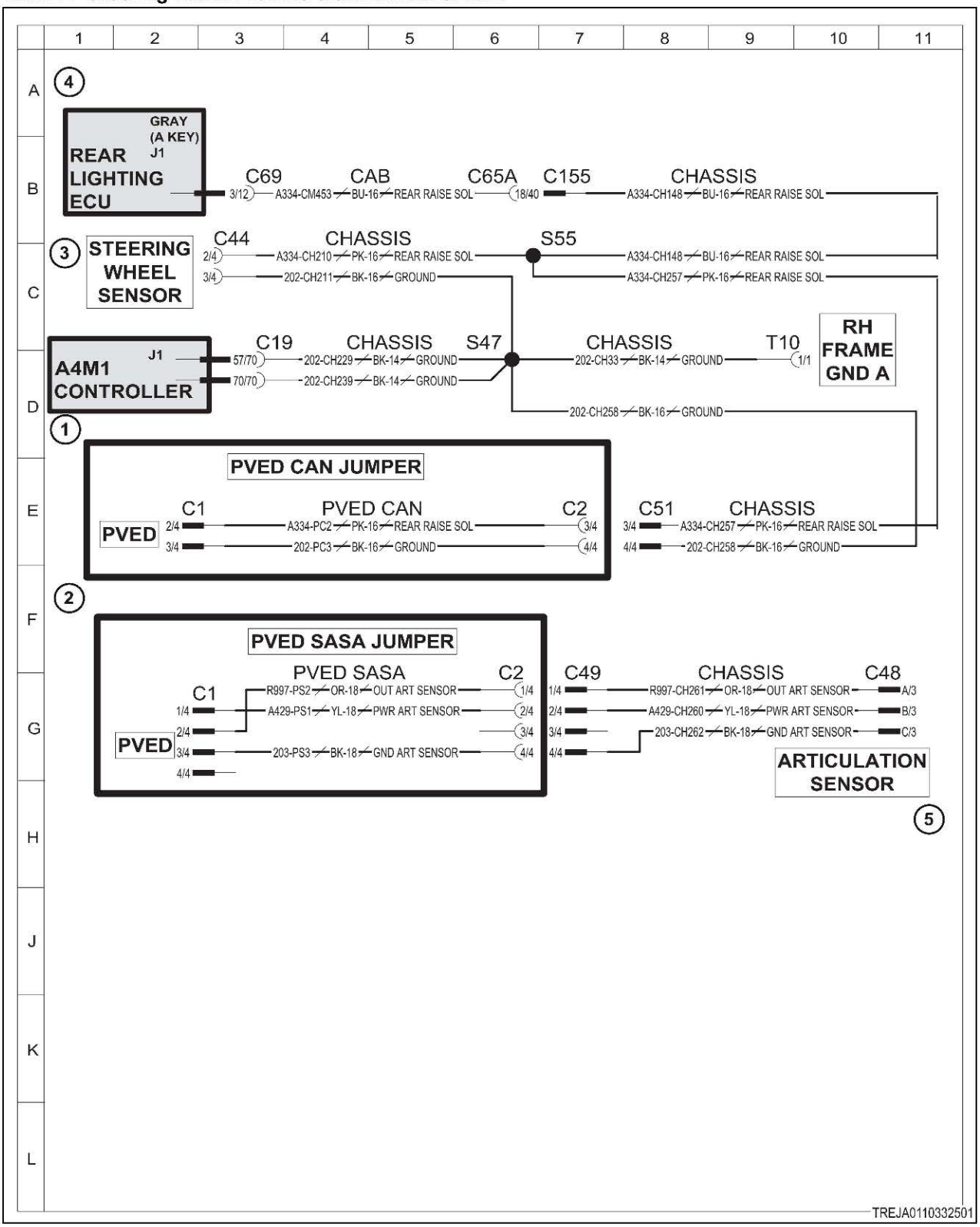

Fig. 598 Steering assist module schematic

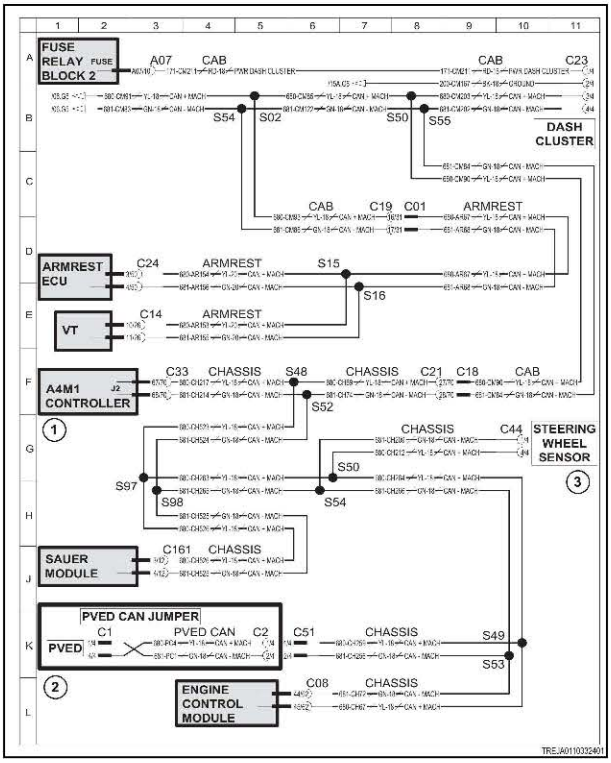

Fig. 599

10.8.3 Code SA 19 SPN 612 FMI 00

The steering wheel position sensor above normal operational range.

The steering module has detected the steering sensor set points are invalid or do not match.

Diagnosis and solution

1. Check for power at the steering wheel sensor .

a) Turn the battery disconnect switch to the on position.

b) Turn the key start switch to the on position but do not start the engine.

c) Check the voltage from the steering wheel sensor connector contact 2 to frame ground.

Result

Expected result - voltage is 12 volts.

Results:

- Yes - voltage is 12 Volts.

  step 2
- No - voltage is not 12 volts.

  Repair or replace the harness.

  step 4

2. Check for short circuit to ground.

a) Turn the key start switch to the off position.

b) Turn the battery disconnect switch to the off position.

c) Remove the key from the battery disconnect switch.

d) Check resistance from the steering wheel sensor connector contact 3 to frame ground.

Result

Expected result - the resistance measurement are open circuit.

Results:

- Yes - the resistance measurement are open circuit.

  step 3
- No - the resistance measurement are open circuit.

  Repair or replace the harness.

  step 4

3. Check the steering wheel sensor CAN harness.

a) Check the voltage from the steering wheel sensor connector contact 1 to frame ground.

Result

Expected result - the voltage is between 2.3 volts and 2.5 volts.

Results:

- Yes - the voltage is between 2.3 volts and 2.5 volts.

  step 3
- No - the voltage is not between 2.3 volts and 2.5 volts.

  Repair or replace the harness.

  step 4

b) Check the voltage from the steering wheel sensor connector contact 4 to frame ground.

Result

Expected result - the voltage is between 2.5 volts and 2.7 volts.

Results:

- Yes - the voltage is between 2.5 volts and 2.7 volts.

  step 3
- No - the voltage is not between 2.5 volts and 2.7 volts.

  Repair or replace the harness.

  step 4

4. Check if the diagnostic code remains.

a) Check and clean the harness connector contacts.
b) Connect all the connectors.
c) Turn the battery disconnect switch to the on position.
d) Turn the key start switch to the on position.
e) Operate the machine at low idle.
f) Check if the diagnostic code remains.

Result

Expected result - the diagnostic code is not active.

Results:

- Yes - SPN 612 FMI 00 is not active.

  Stop.
- No - SPN 612 FMI 00 is active.

  Failure of the steering module is possible but not common. Exit the procedure and do the procedure again. If the diagnostic code remains active, replace the module.

  Stop.

10.8.3.1 Steering assist module electrical schematic

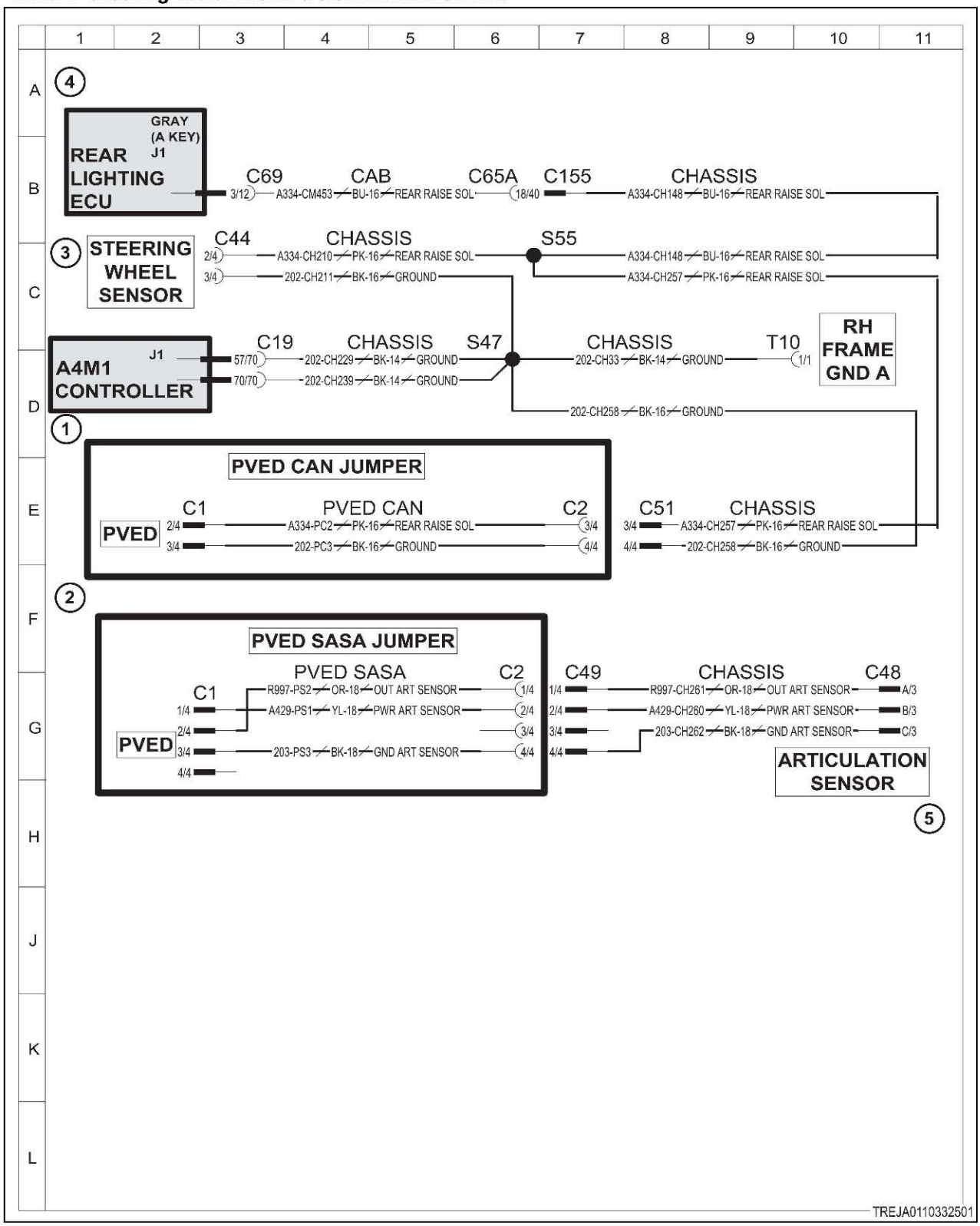

Fig. 600 Steering assist module schematic

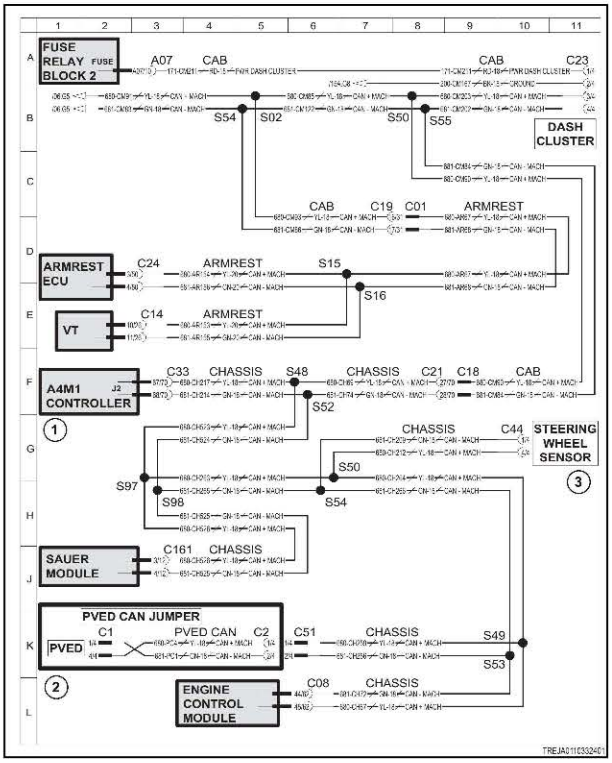

Fig. 601

10.8.4 Code SA 19 SPN 613 FMI 14

Steering module detected steering wheel rotational speed exceeds the expected limit.

Diagnosis and solution

1. Verify hardware and software part numbers.

Result

Expected result - part numbers are correct.

- Yes - part numbers are correct.

  Goto step 2
- No - part numbers are not correct.

  Entering the correct part numbers.

  Flash appropriate machine software.

2. Check for power at the steering wheel sensor .

a) Turn the battery disconnect switch to the on position.

b) Turn the key start switch to the on position but do not start the engine.

c) Check the voltage from the steering wheel sensor connector contact 2 to frame ground.

Result

Expected result - voltage is 12 volts.

Results:

- Yes - voltage is 12 Volts.

  step 2
- No - voltage is not 12 volts.

  Repair or replace the harness.

  step 4

3. Check for short circuit to ground.
a) Turn the key start switch to the off position.
b) Turn the battery disconnect switch to the off position.
c) Remove the key from the battery disconnect switch.
d) Check resistance from the steering wheel sensor connector contact 3 to frame ground.

Result

Expected result - the resistance measurement are open circuit.

Results:

- Yes - the resistance measurement are open circuit.

  step 3
- No - the resistance measurement are open circuit.

  Repair or replace the harness.

  step 4

4. Check the steering wheel sensor CAN harness.
a) Check the voltage from the steering wheel sensor connector contact 1 to frame ground.

Result

Expected result - the voltage is between 2.3 volts and 2.5 volts.

Results:

- Yes - the voltage is between 2.3 volts and 2.5 volts.

  step 3
- No - the voltage is not between 2.3 volts and 2.5 volts.

  Repair or replace the harness.

  step 4

b) Check the voltage from the steering wheel sensor connector contact 4 to frame ground.

Result

Expected result - the voltage is between 2.5 volts and 2.7 volts.

Results:

- Yes - the voltage is between 2.5 volts and 2.7 volts.

  step 3
- No - the voltage is not between 2.5 volts and 2.7 volts.

  Repair or replace the harness.

  step 4

5. Check if the diagnostic code remains.
a) Check and clean the harness connector contacts.
b) Connect all the connectors.
c) Turn the battery disconnect switch to the on position.
d) Turn the key start switch to the on position.
e) Operate the machine at low idle.
f) Check if the diagnostic code remains.

Result

Expected result - the diagnostic code is not active.

Results:

- Yes - SPN 613 FMI 14 is not active.

  Stop.
- No - SPN 613 FMI 14 is active.

  Failure of the steering module is possible but not common. Exit the procedure and do the procedure again. If the diagnostic code remains active, replace the module.

  Stop.

10.8.4.1 Steering assist module electrical schematic

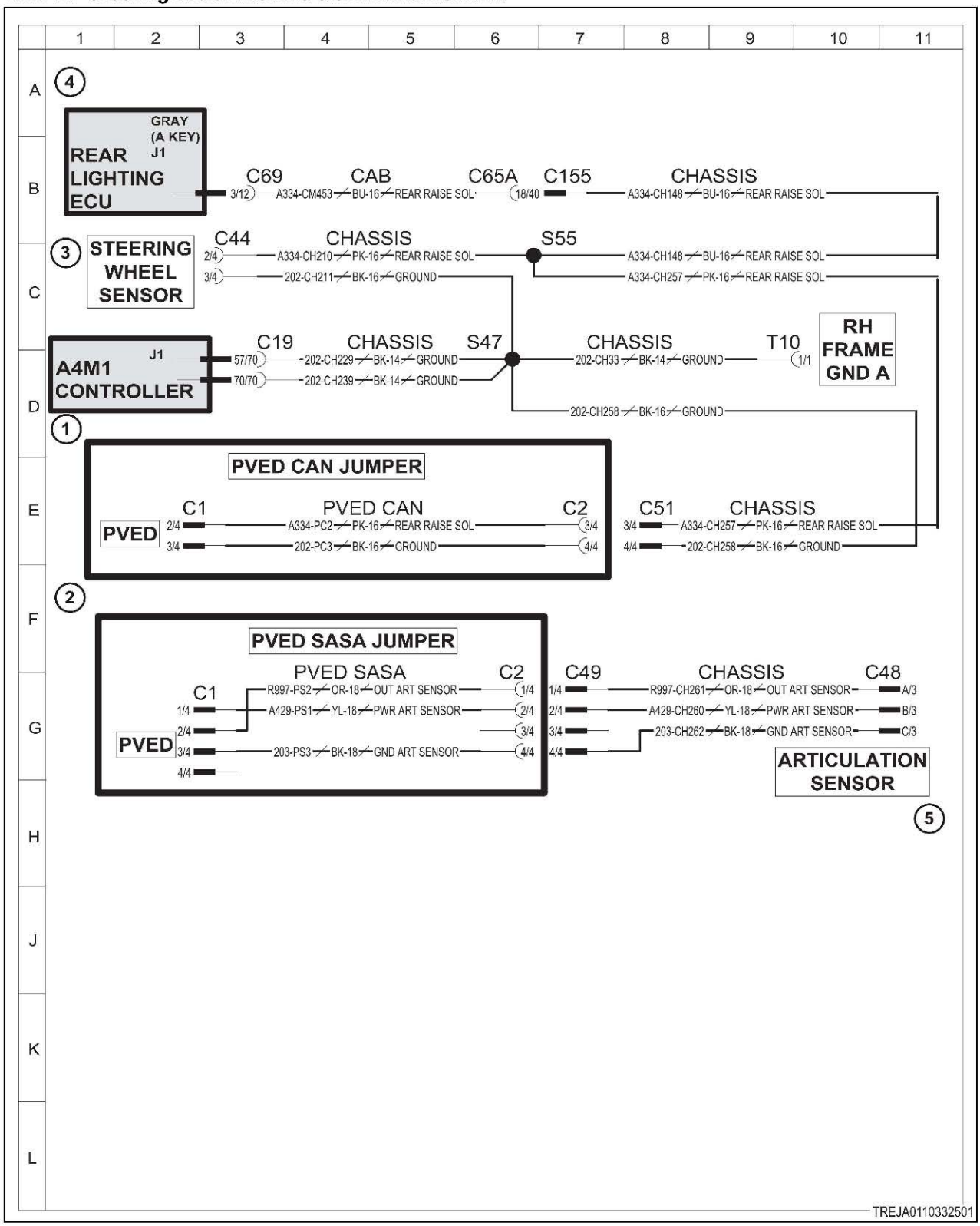

Fig. 602 Steering assist module schematic

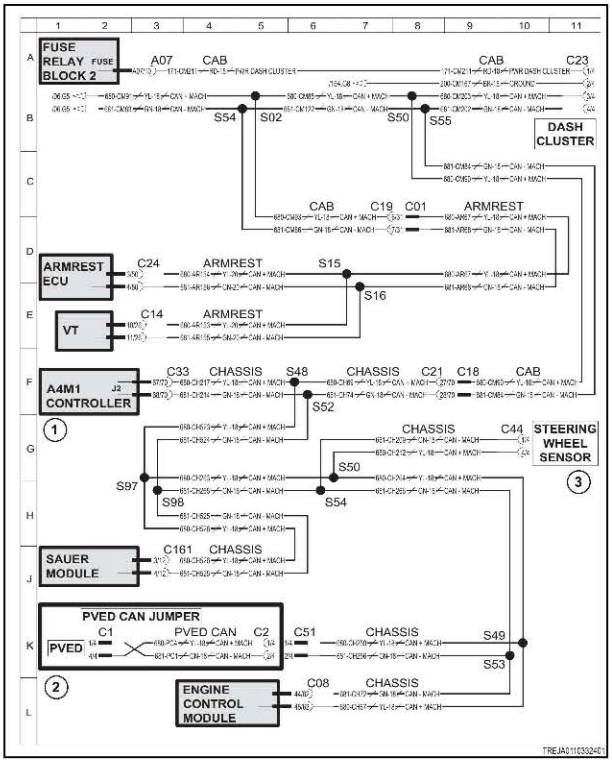

Fig. 603

10.8.5 Code SA 19 SPN 614 FMI 00

The steering spool valve above normal operational range.

The steering module has detected un-explained actuation of the steering spool valve.

Diagnosis and solution

1. Check for power at the steering module.
- a) Turn the battery disconnect switch to the on position.
- b) Turn the key start switch to the on position but do not start the engine.
- c) Check the voltage from the steering module connector contact 2 to frame ground.

Result

Expected result - voltage is 12 volts.

Results:

- Yes - voltage is 12 Volts.

  step 2
- No - voltage is not 12 volts.

  Repair or replace the harness.

  step 4

2. Check for short circuit to ground.
- a) Turn the key start switch to the off position.
- b) Turn the battery disconnect switch to the off position.
- c) Remove the key from the battery disconnect switch.
- d) Check resistance from the steering module connector contact 3 to frame ground.

Result

Expected result - the resistance measurement are open circuit.

Results:

- Yes - the resistance measurement are open circuit.

  step 3
- No - the resistance measurement are open circuit.

  Repair or replace the harness.

  step 4

3. Check the steering wheel sensor CAN harness.

a) Check the voltage from the steering module connector contact 1 to frame ground.

Result

Expected result - the voltage is between 2.3 volts and 2.5 volts.

Results:

- Yes - the voltage is between 2.3 volts and 2.5 volts.

  step 3
- No - the voltage is not between 2.3 volts and 2.5 volts.

  Repair or replace the harness.

  step 4

b) Check the voltage from the steering module connector contact 4 to frame ground.

Result

Expected result - the voltage is between 2.5 volts and 2.7 volts.

Results:

- Yes - the voltage is between 2.5 volts and 2.7 volts.

  step 3
- No - the voltage is not between 2.5 volts and 2.7 volts.

  Repair or replace the harness.

  step 4

4. Check if the diagnostic code remains.

a) Check and clean the harness connector contacts.
b) Connect all the connectors.
c) Turn the battery disconnect switch to the on position.
d) Turn the key start switch to the on position.
e) Operate the machine at low idle.
f) Check if the diagnostic code remains.

Result

Expected result - the diagnostic code is not active.

Results:

- Yes - SPN 614 FMI 00 is not active.

  Stop.
- No - SPN 614 FMI 00 is active.

  Failure of the steering module is possible but not common. Exit the procedure and do the procedure again. If the diagnostic code remains active, replace the module.

  Stop.

10.8.5.1 Steering assist module electrical schematic

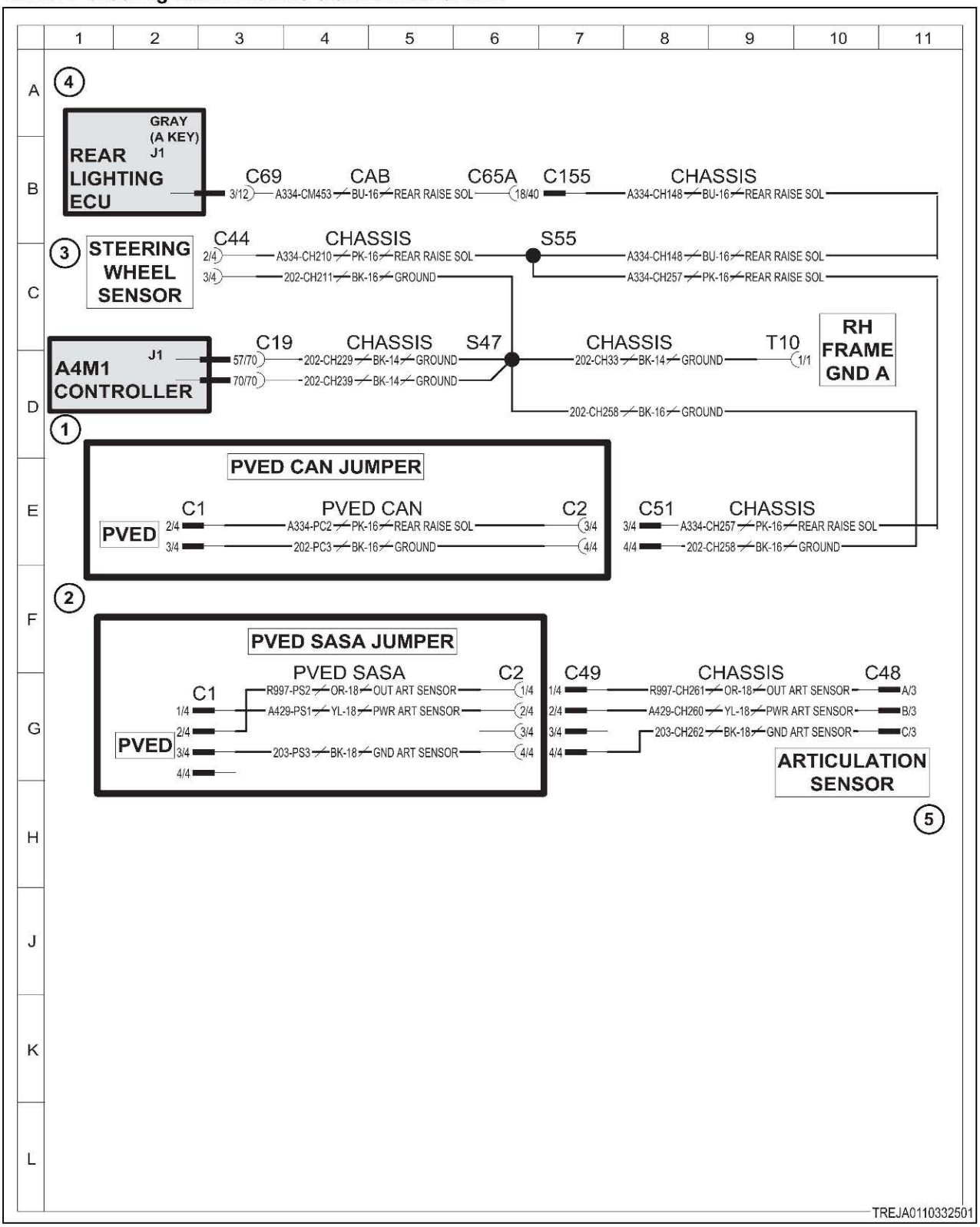

Fig. 604 Steering assist module schematic

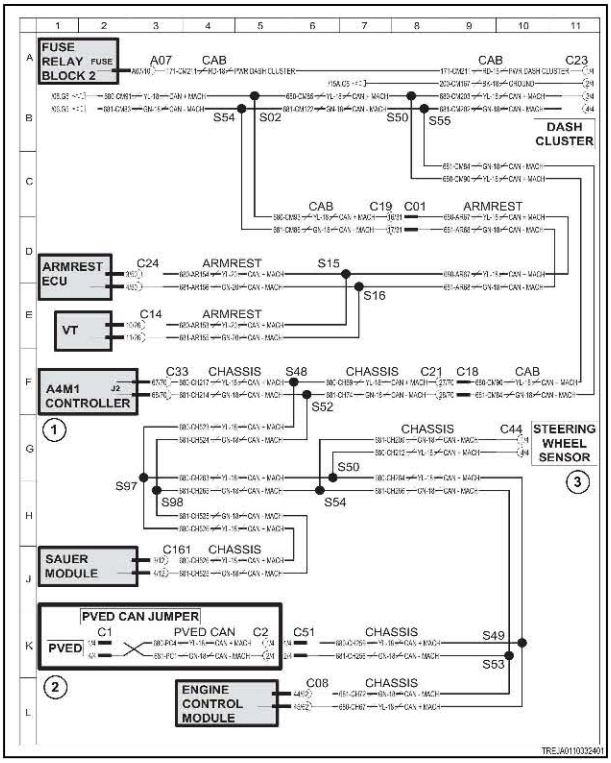

Fig. 605

10.8.6 Code SA 19 SPN 615 FMI 14

Steering module detected a steering control critical failure.

Diagnosis and solution

1. Verify hardware and software part numbers.

Result

Expected result - part numbers are correct.

- Yes - part numbers are correct.

  Goto step 2
- No - part numbers are not correct.

  Entering the correct part numbers.

  Flash appropriate machine software.

2. Check for power at the steering wheel sensor .

a) Turn the battery disconnect switch to the on position.
b) Turn the key start switch to the on position but do not start the engine.
c) Check the voltage from the steering wheel sensor connector contact 2 to frame ground.

Result

Expected result - voltage is 12 volts.

Results:

- Yes - voltage is 12 Volts.

  step 2
- No - voltage is not 12 volts.

  Repair or replace the harness.

  step 4

3. Check for short circuit to ground.

a) Turn the key start switch to the off position.
b) Turn the battery disconnect switch to the off position.
c) Remove the key from the battery disconnect switch.
d) Check resistance from the steering wheel sensor connector contact 3 to frame ground.

Result

Expected result - the resistance measurement are open circuit.

Results:

- Yes - the resistance measurement are open circuit.

  step 3
- No - the resistance measurement are open circuit.

  Repair or replace the harness.

  step 4

4. Check the steering wheel sensor CAN harness.

a) Check the voltage from the steering wheel sensor connector contact 1 to frame ground.

Result

Expected result - the voltage is between 2.3 volts and 2.5 volts.

Results:

- Yes - the voltage is between 2.3 volts and 2.5 volts.

  step 3
- No - the voltage is not between 2.3 volts and 2.5 volts.

  Repair or replace the harness.

  step 4

b) Check the voltage from the steering wheel sensor connector contact 4 to frame ground.

Result

Expected result - the voltage is between 2.5 volts and 2.7 volts.

Results:

- Yes - the voltage is between 2.5 volts and 2.7 volts.

  step 3
- No - the voltage is not between 2.5 volts and 2.7 volts.

  Repair or replace the harness.

  step 4

5. Check if the diagnostic code remains.

a) Check and clean the harness connector contacts.
b) Connect all the connectors.
c) Turn the battery disconnect switch to the on position.
d) Turn the key start switch to the on position.
e) Operate the machine at low idle.
f) Check if the diagnostic code remains.

Result

Expected result - the diagnostic code is not active.

Results:

- Yes - SPN 615 FMI 14 is not active.

  Stop.
- No - SPN 615 FMI 14 is active.

  Failure of the steering module is possible but not common. Exit the procedure and do the procedure again. If the diagnostic code remains active, replace the module.

  Stop.

10.8.6.1 Steering assist module electrical schematic

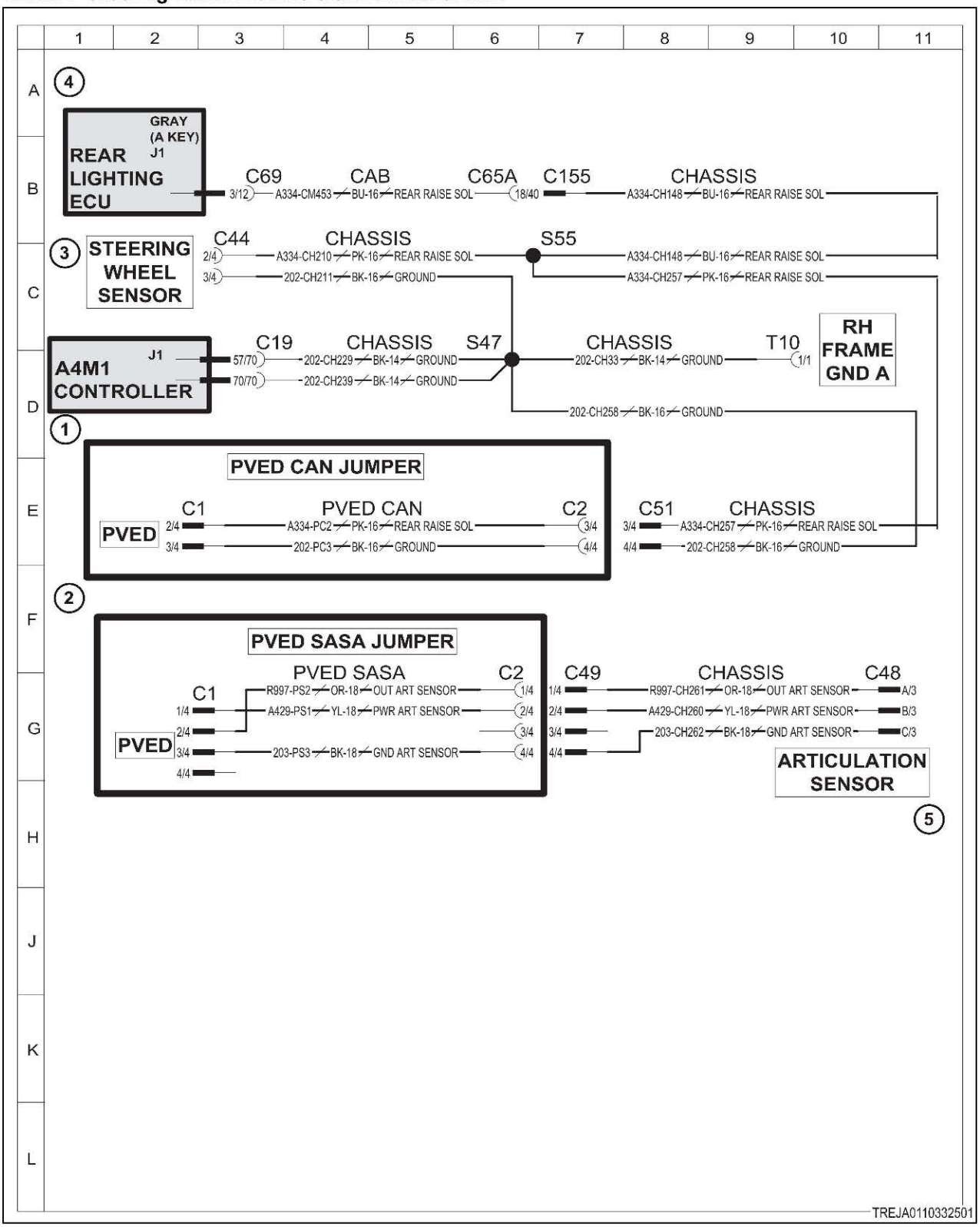

Fig. 606 Steering assist module schematic

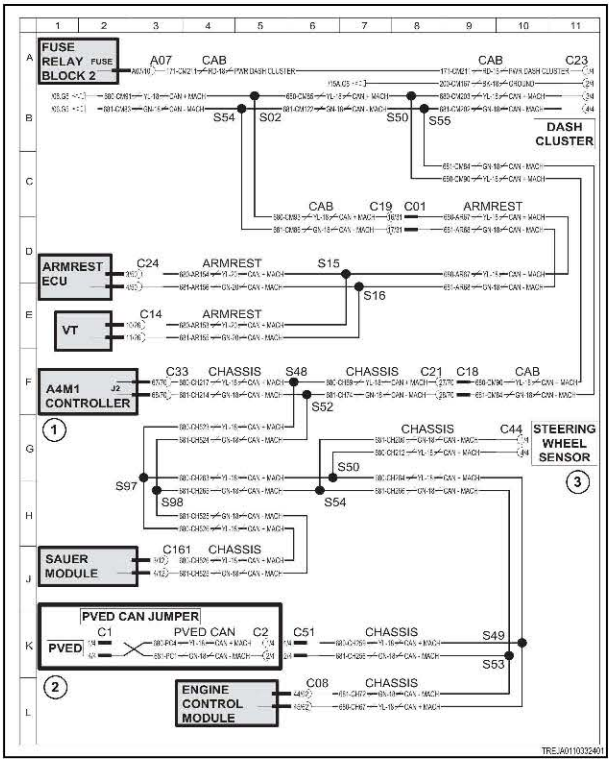

Fig. 607

10.8.7 Code SA 19 SPN 627 FMI 00

The power supply above normal operational range.

Diagnosis and solution

1. Check for power at the steering module.
- a) Turn the battery disconnect switch to the on position.
- b) Turn the key start switch to the on position but do not start the engine.
- c) Check the voltage from the steering module connector contact 2 to frame ground.

Result

Expected result - voltage is 12 volts.

Results:

- Yes - voltage is 12 Volts.

  step 2
- No - voltage is not 12 volts.

  Repair or replace the harness.

  step 4

2. Check for short circuit to ground.
- a) Turn the key start switch to the off position.
- b) Turn the battery disconnect switch to the off position.
- c) Remove the key from the battery disconnect switch.
- d) Check resistance from the steering module connector contact 3 to frame ground.

Result

Expected result - the resistance measurement are open circuit.

Results:

- Yes - the resistance measurement are open circuit.

  step 3
- No - the resistance measurement are open circuit.

  Repair or replace the harness.

  step 4

3. Check the steering wheel sensor CAN harness.

a) Check the voltage from the steering module connector contact 1 to frame ground.

Result

Expected result - the voltage is between 2.3 volts and 2.5 volts.

Results:

- Yes - the voltage is between 2.3 volts and 2.5 volts.

  step 3
- No - the voltage is not between 2.3 volts and 2.5 volts.

  Repair or replace the harness.

  step 4

b) Check the voltage from the steering module connector contact 4 to frame ground.

Result

Expected result - the voltage is between 2.5 volts and 2.7 volts.

Results:

- Yes - the voltage is between 2.5 volts and 2.7 volts.

  step 3
- No - the voltage is not between 2.5 volts and 2.7 volts.

  Repair or replace the harness.

  step 4

4. Check if the diagnostic code remains.

a) Check and clean the harness connector contacts.
b) Connect all the connectors.
c) Turn the battery disconnect switch to the on position.
d) Turn the key start switch to the on position.
e) Operate the machine at low idle.
f) Check if the diagnostic code remains.

Result

Expected result - the diagnostic code is not active.

Results:

- Yes - SPN 627 FMI 00 is not active.

  Stop.
- No - SPN 627 FMI 00 is active.

  Failure of the steering module is possible but not common. Exit the procedure and do the procedure again. If the diagnostic code remains active, replace the module.

  Stop.

10.8.7.1 Steering assist module electrical schematic

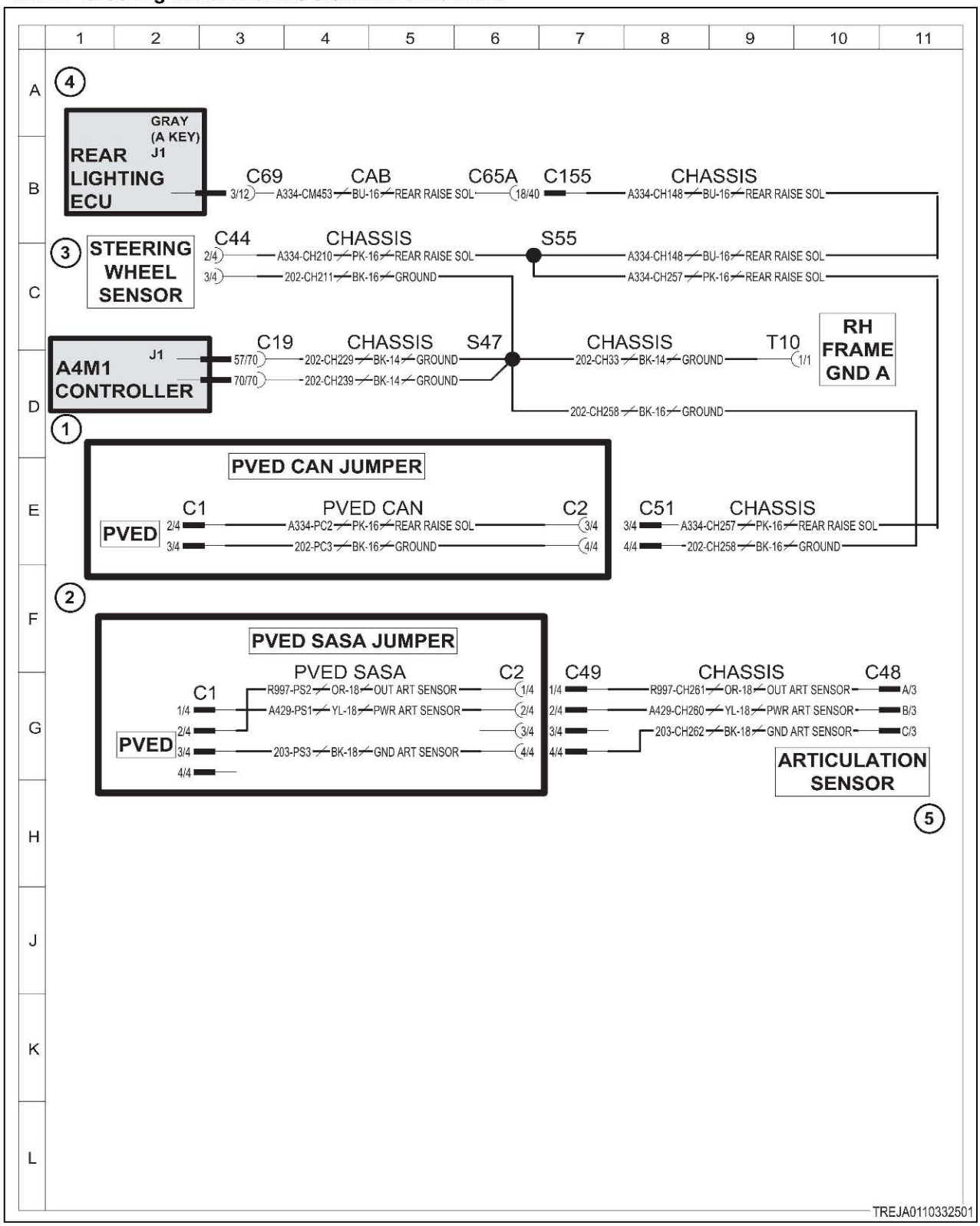

Fig. 608 Steering assist module schematic

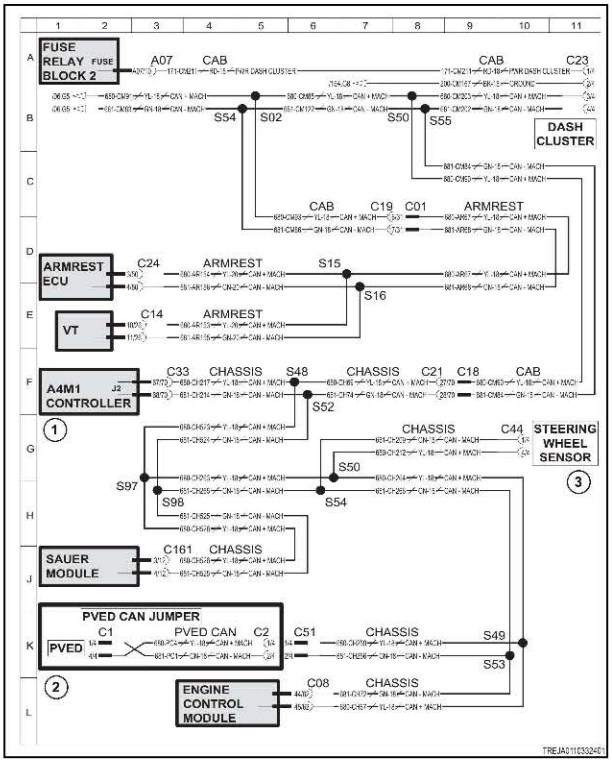

Fig. 609

10.8.8 Code SA 19 SPN 627 FMI 04

The steering module detected voltage is too low.

Diagnosis and solution

1. Check for power at the steering module .

a) Turn the battery disconnect switch to the on position.

b) Turn the key start switch to the on position but do not start the engine.

c) Check the voltage from the steering module connector contact 2 to frame ground.

Result

Expected result - voltage is 12 volts.

Results:

- Yes - voltage is 12 Volts.

  step 2
- No - voltage is not 12 volts.

  Repair or replace the harness.

  step 3

2. Check for short circuit to ground.

a) Turn the key start switch to the off position.

b) Turn the battery disconnect switch to the off position.

c) Remove the key from the battery disconnect switch.

d) Check resistance from the steering module connector contact 3 to frame ground.

Result

Expected result - the resistance measurement are open circuit.

Results:

- Yes - the resistance measurement are open circuit.

  step 3
- No - the resistance measurement are open circuit.

  Repair or replace the harness.

  step 3

3. Check if the diagnostic code remains.

a) Check and clean the harness connector contacts.
b) Connect all the connectors.
c) Turn the battery disconnect switch to the on position.
d) Turn the key start switch to the on position.
e) Operate the machine at low idle.
f) Check if the diagnostic code remains.

Result

Expected result - the diagnostic code is not active.

Results:

- Yes - SPN 627 FMI 04 is not active.

  Stop.
- No - SPN 627 FMI 04 is active.

  Failure of the steering module is possible but not common. Exit the procedure and do the procedure again. If the diagnostic code remains active, replace the module.

  Stop.

10.8.8.1 Steering assist module electrical schematic

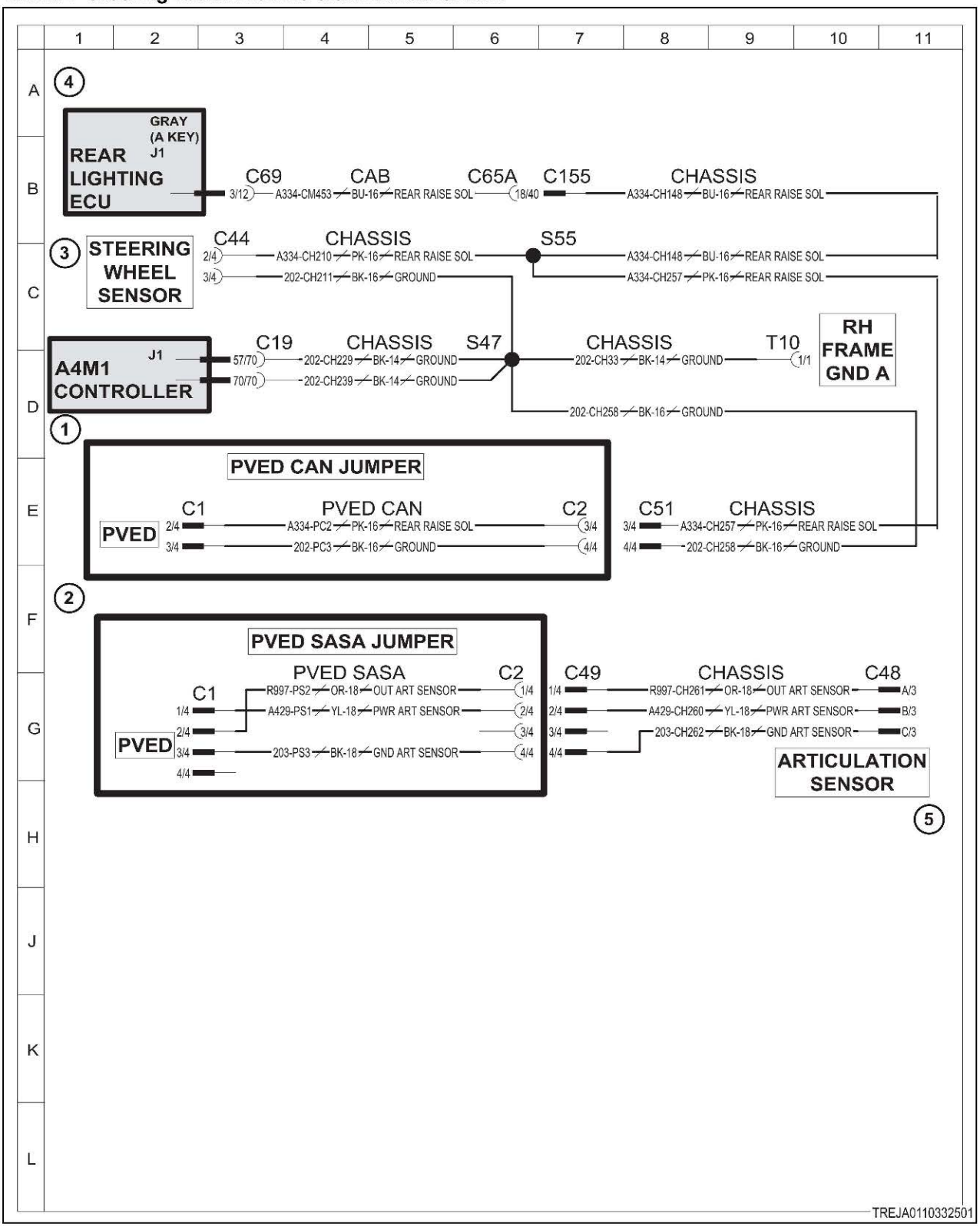

Fig. 610 Steering assist module schematic

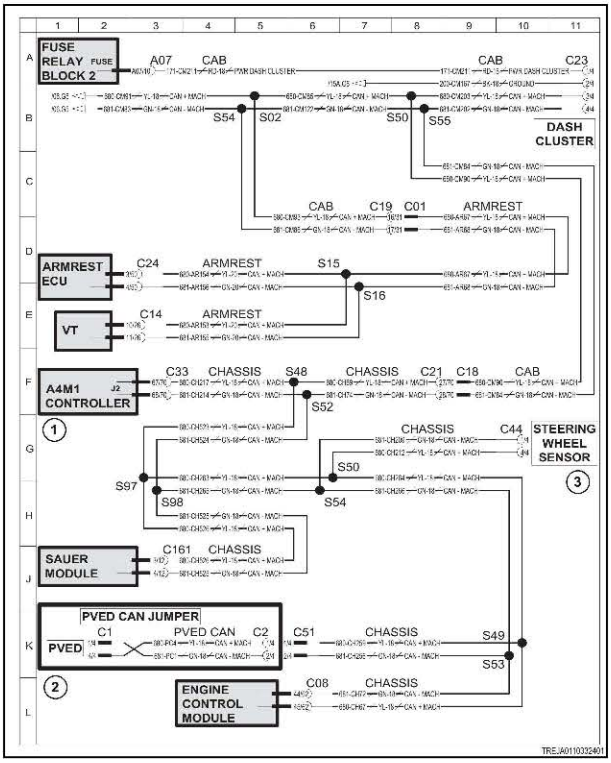

Fig. 611

10.8.9 Code SA 19 SPN 1079 FMI 00

The five volt DC supply above normal operational range.

Diagnosis and solution

1. Check for power at the steering module.
- a) Turn the battery disconnect switch to the on position.
- b) Turn the key start switch to the on position but do not start the engine.
- c) Check the voltage from the steering module connector contact 2 to frame ground.

Result

Expected result - voltage is 12 volts.

Results:

- Yes - voltage is 12 Volts.

  step 2
- No - voltage is not 12 volts.

  Repair or replace the harness.

  step 4

2. Check for short circuit to ground.
- a) Turn the key start switch to the off position.
- b) Turn the battery disconnect switch to the off position.
- c) Remove the key from the battery disconnect switch.
- d) Check resistance from the steering module connector contact 3 to frame ground.

Result

Expected result - the resistance measurement are open circuit.

Results:

- Yes - the resistance measurement are open circuit.

  step 3
- No - the resistance measurement are open circuit.

  Repair or replace the harness.

  step 4

3. Check the steering wheel sensor CAN harness.

a) Check the voltage from the steering module connector contact 1 to frame ground.

Result

Expected result - the voltage is between 2.3 volts and 2.5 volts.

Results:

- Yes - the voltage is between 2.3 volts and 2.5 volts.

  step 3
- No - the voltage is not between 2.3 volts and 2.5 volts.

  Repair or replace the harness.

  step 4

b) Check the voltage from the steering module connector contact 4 to frame ground.

Result

Expected result - the voltage is between 2.5 volts and 2.7 volts.

Results:

- Yes - the voltage is between 2.5 volts and 2.7 volts.

  step 3
- No - the voltage is not between 2.5 volts and 2.7 volts.

  Repair or replace the harness.

  step 4

4. Check if the diagnostic code remains.

a) Check and clean the harness connector contacts.
b) Connect all the connectors.
c) Turn the battery disconnect switch to the on position.
d) Turn the key start switch to the on position.
e) Operate the machine at low idle.
f) Check if the diagnostic code remains.

Result

Expected result - the diagnostic code is not active.

Results:

- Yes - SPN 1079 FMI 00 is not active.

  Stop.
- No - SPN 1079 FMI 00 is active.

  Failure of the steering module is possible but not common. Exit the procedure and do the procedure again. If the diagnostic code remains active, replace the module.

  Stop.

10.8.9.1 Steering assist module electrical schematic

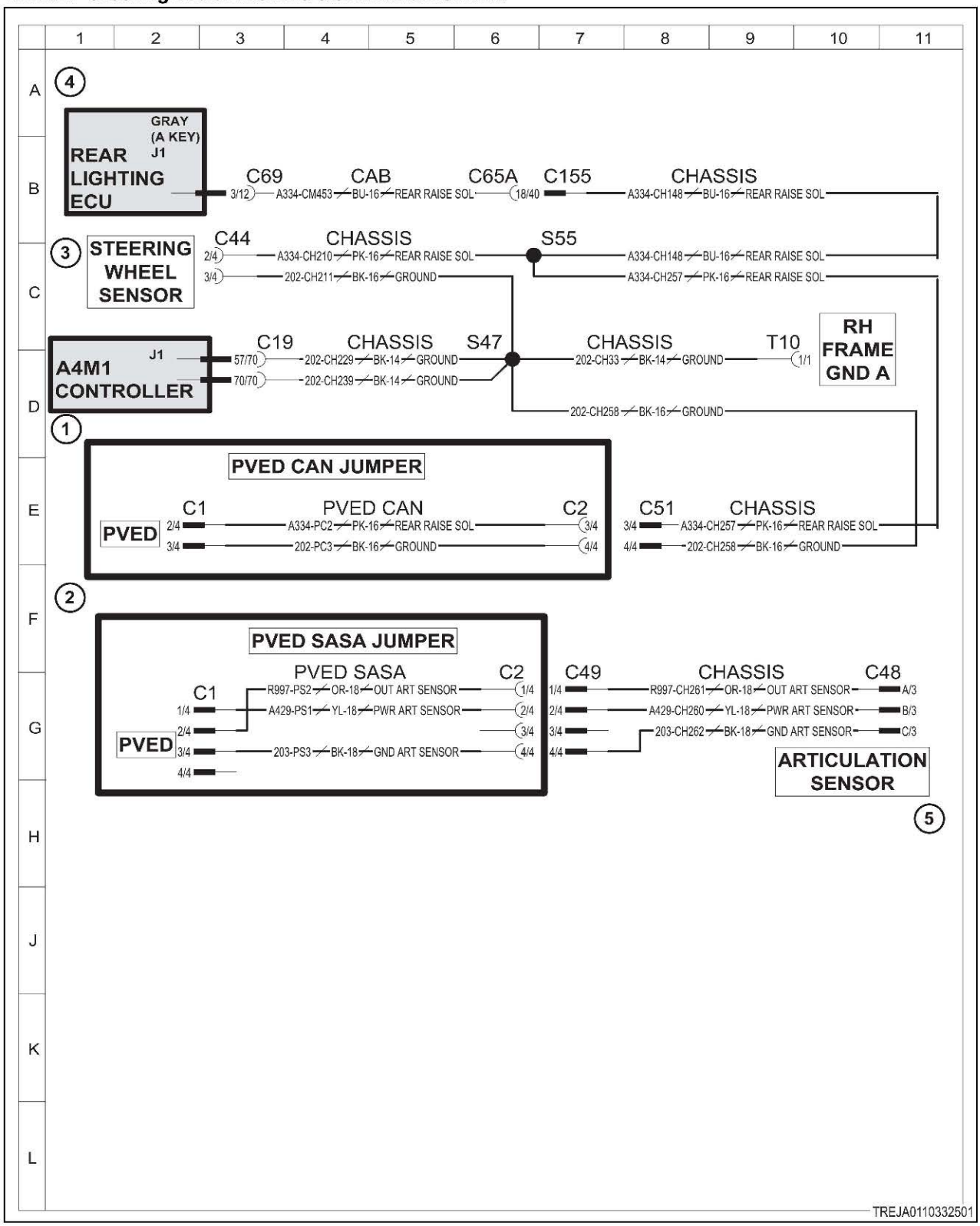

Fig. 612 Steering assist module schematic

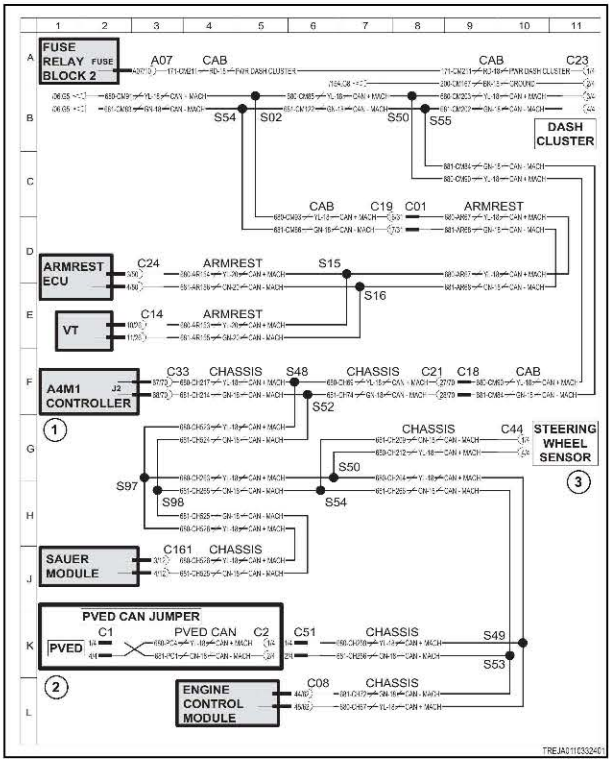

Fig. 613

10.8.10 Code SA 19 SPN 1083 FMI 00

The articulation angle sensor above normal operational range.

Diagnosis and solution

1. Check for power at the steering module.

a) Turn the battery disconnect switch to the on position.

b) Turn the key start switch to the on position but do not start the engine.

c) Check the voltage from the steering module connector contact 2 to frame ground.

Result

Expected result - voltage is 12 volts.

Results:

- Yes - voltage is 12 Volts.

  step 2
- No - voltage is not 12 volts.

  Repair or replace the harness.

  step 4

2. Check for short circuit to ground.

a) Turn the key start switch to the off position.

b) Turn the battery disconnect switch to the off position.

c) Remove the key from the battery disconnect switch.

d) Check resistance from the steering module connector contact 3 to frame ground.

Result

Expected result - the resistance measurement are open circuit.

Results:

- Yes - the resistance measurement are open circuit.

  step 3
- No - the resistance measurement are open circuit.

  Repair or replace the harness.

  step 4

3. Check the steering wheel sensor CAN harness.

a) Check the voltage from the steering module connector contact 1 to frame ground.

Result

Expected result - the voltage is between 2.3 volts and 2.5 volts.

Results:

- Yes - the voltage is between 2.3 volts and 2.5 volts.

  step 3
- No - the voltage is not between 2.3 volts and 2.5 volts.

  Repair or replace the harness.

  step 4

b) Check the voltage from the steering module connector contact 4 to frame ground.

Result

Expected result - the voltage is between 2.5 volts and 2.7 volts.

Results:

- Yes - the voltage is between 2.5 volts and 2.7 volts.

  step 3
- No - the voltage is not between 2.5 volts and 2.7 volts.

  Repair or replace the harness.

  step 4

4. Check if the diagnostic code remains.

a) Check and clean the harness connector contacts.
b) Connect all the connectors.
c) Turn the battery disconnect switch to the on position.
d) Turn the key start switch to the on position.
e) Operate the machine at low idle.
f) Check if the diagnostic code remains.

Result

Expected result - the diagnostic code is not active.

Results:

- Yes - SPN 1083 FMI 00 is not active.

  Stop.
- No - SPN 1083 FMI 00 is active.

  Failure of the steering module is possible but not common. Exit the procedure and do the procedure again. If the diagnostic code remains active, replace the module.

  Stop.

10.8.10.1 Steering assist module electrical schematic

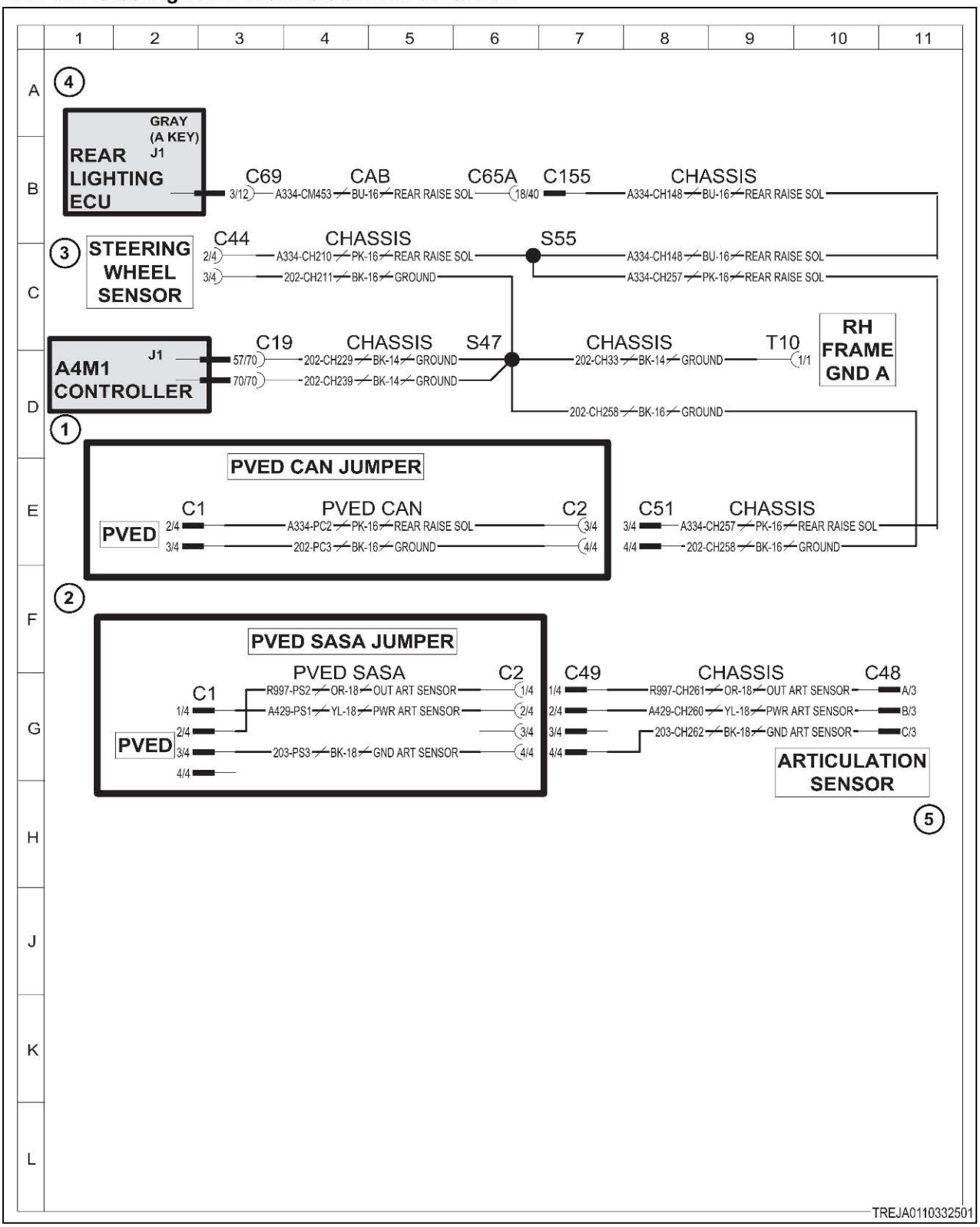

Fig. 614 Steering assist module schematic

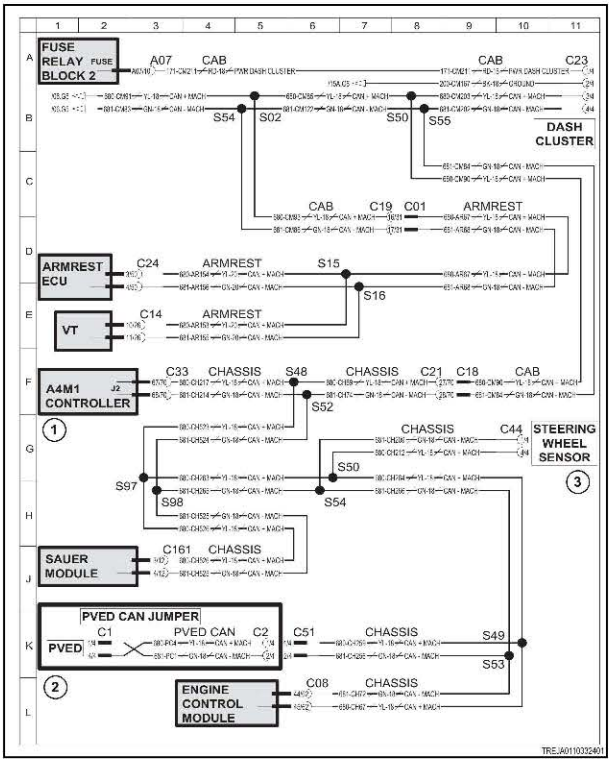

Fig. 615

10.8.11 Code SA 19 SPN 1084 FMI 00

The steering module sensor 2 above normal operational range.

Diagnosis and solution

1. Check for power at the steering module.
- a) Turn the battery disconnect switch to the on position.
- b) Turn the key start switch to the on position but do not start the engine.
- c) Check the voltage from the steering module connector contact 2 to frame ground.

Result

Expected result - voltage is 12 volts.

Results:

- Yes - voltage is 12 Volts.

  step 2
- No - voltage is not 12 volts.

  Repair or replace the harness.

  step 4

2. Check for short circuit to ground.
- a) Turn the key start switch to the off position.
- b) Turn the battery disconnect switch to the off position.
- c) Remove the key from the battery disconnect switch.
- d) Check resistance from the steering module connector contact 3 to frame ground.

Result

Expected result - the resistance measurement are open circuit.

Results:

- Yes - the resistance measurement are open circuit.

  step 3
- No - the resistance measurement are open circuit.

  Repair or replace the harness.

  step 4

3. Check the steering wheel sensor CAN harness.

a) Check the voltage from the steering module connector contact 1 to frame ground.

Result

Expected result - the voltage is between 2.3 volts and 2.5 volts.

Results:

- Yes - the voltage is between 2.3 volts and 2.5 volts.

  step 3
- No - the voltage is not between 2.3 volts and 2.5 volts.

  Repair or replace the harness.

  step 4

b) Check the voltage from the steering module connector contact 4 to frame ground.

Result

Expected result - the voltage is between 2.5 volts and 2.7 volts.

Results:

- Yes - the voltage is between 2.5 volts and 2.7 volts.

  step 3
- No - the voltage is not between 2.5 volts and 2.7 volts.

  Repair or replace the harness.

  step 4

4. Check if the diagnostic code remains.

a) Check and clean the harness connector contacts.
b) Connect all the connectors.
c) Turn the battery disconnect switch to the on position.
d) Turn the key start switch to the on position.
e) Operate the machine at low idle.
f) Check if the diagnostic code remains.

Result

Expected result - the diagnostic code is not active.

Results:

- Yes - SPN 1084 FMI 00 is not active.

  Stop.
- No - SPN 1084 FMI 00 is active.

  Failure of the steering module is possible but not common. Exit the procedure and do the procedure again. If the diagnostic code remains active, replace the module.

  Stop.

10.8.11.1 Steering assist module electrical schematic

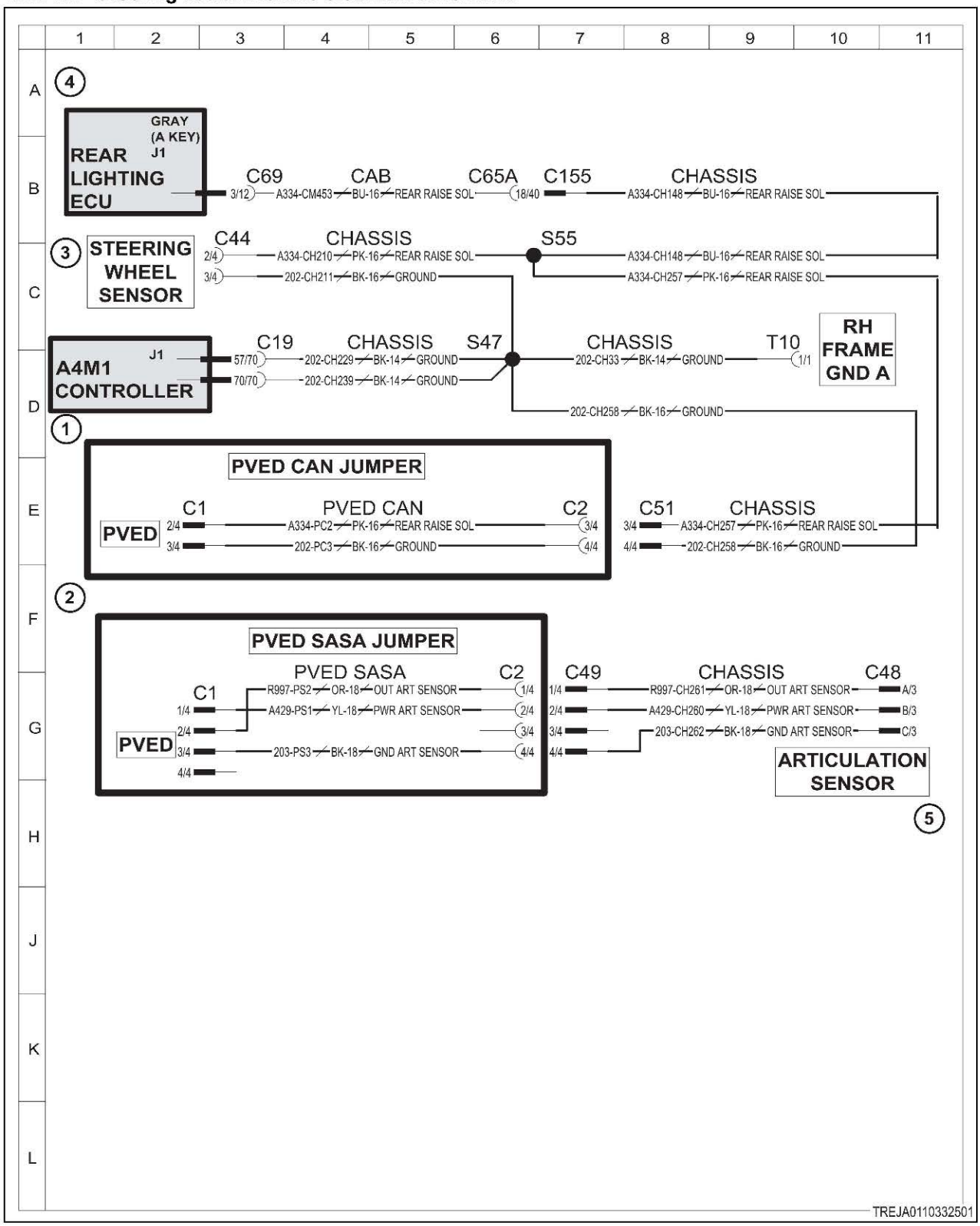

Fig. 616 Steering assist module schematic

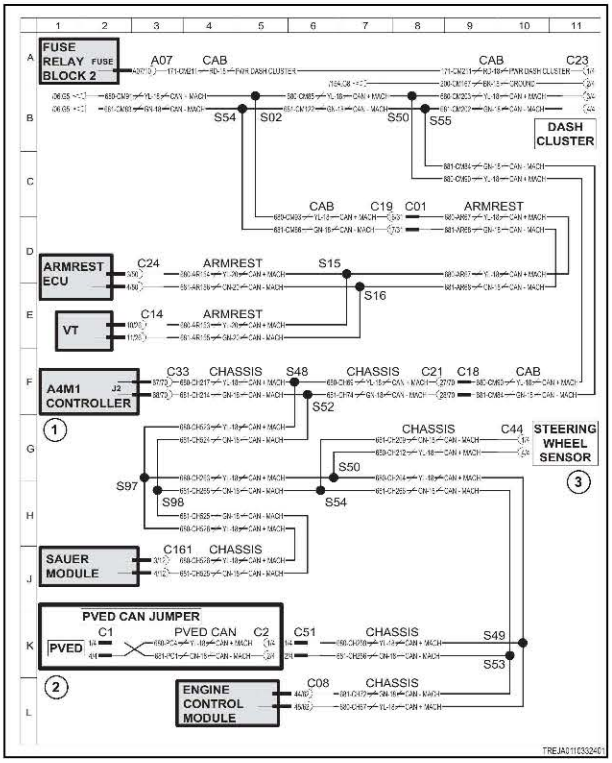

Fig. 617

10.8.12 Code SA 19 SPN 1084 FMI 04

The steering sensor voltage short circuit to ground.

Diagnosis and solution

1. Check for power at the steering sensor .

a) Turn the battery disconnect switch to the on position.

b) Turn the key start switch to the on position but do not start the engine.

c) Check the voltage from the steering sensor connector contact 2 to frame ground.

Result

Expected result - voltage is 12 volts.

Results:

- Yes - voltage is 12 Volts.

  step 2
- No - voltage is not 12 volts.

  Repair or replace the harness.

  step 3

2. Check for short circuit to ground.

a) Turn the key start switch to the off position.

b) Turn the battery disconnect switch to the off position.

c) Remove the key from the battery disconnect switch.

d) Check resistance from the steering sensor connector contact 3 to frame ground.

Result

Expected result - the resistance measurement are open circuit.

Results:

- Yes - the resistance measurement are open circuit.

  step 3
- No - the resistance measurement are open circuit.

  Repair or replace the harness.

  step 3

3. Check if the diagnostic code remains.

a) Check and clean the harness connector contacts.
b) Connect all the connectors.
c) Turn the battery disconnect switch to the on position.
d) Turn the key start switch to the on position.
e) Operate the machine at low idle.
f) Check if the diagnostic code remains.

Result

Expected result - the diagnostic code is not active.

Results:

- Yes - SPN 1084 FMI 04 is not active.

  Stop.
- No - SPN 1084 FMI 04 is active.

  Failure of the steering module is possible but not common. Exit the procedure and do the procedure again. If the diagnostic code remains active, replace the module.

  Stop.

10.8.12.1 Steering assist module electrical schematic

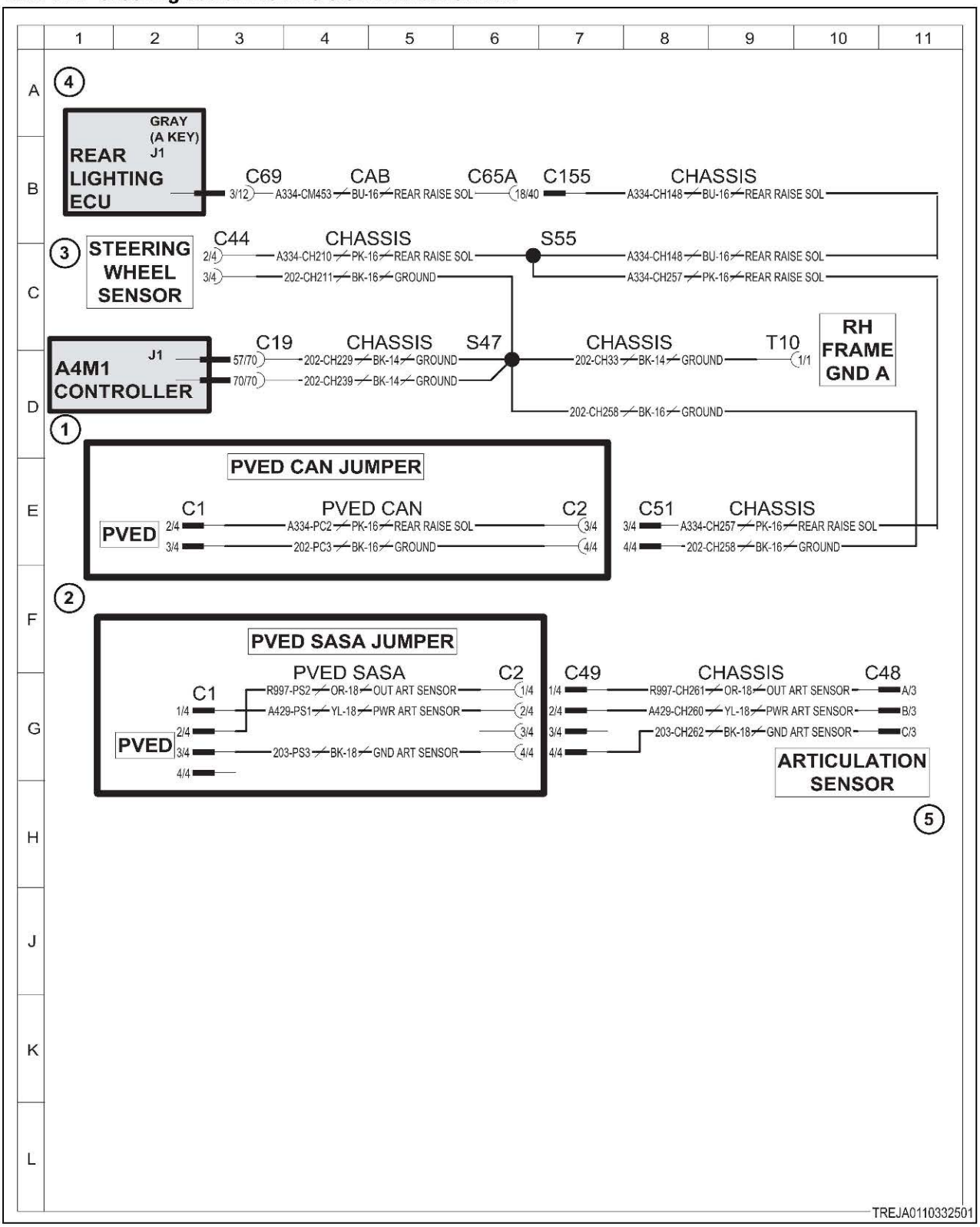

Fig. 618 Steering assist module schematic

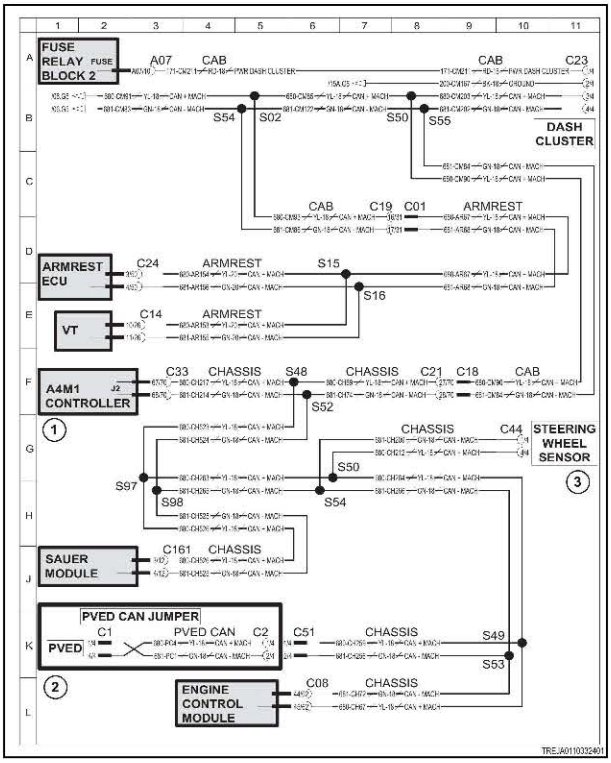

Fig. 619

10.8.13 Code SA 19 SPN 1807 FMI 08

The steering wheel angle abnormal sensor frequency.

Diagnosis and solution

1. Check for power at the steering wheel sensor .

a) Turn the battery disconnect switch to the on position.

b) Turn the key start switch to the on position but do not start the engine.

c) Check the voltage from the steering wheel sensor connector contact 2 to frame ground.

Result

Expected result - voltage is 12 volts.

Results:

- Yes - voltage is 12 Volts.

  step 2
- No - voltage is not 12 volts.

  Repair or replace the harness.

  step 4

2. Check for short circuit to ground.

a) Turn the key start switch to the off position.

b) Turn the battery disconnect switch to the off position.

c) Remove the key from the battery disconnect switch.

d) Check resistance from the steering wheel sensor connector contact 3 to frame ground.

Result

Expected result - the resistance measurement are open circuit.

Results:

- Yes - the resistance measurement are open circuit.

  step 3
- No - the resistance measurement are open circuit.

  Repair or replace the harness.

  step 4

3. Check the steering wheel sensor CAN harness.

a) Check the voltage from the steering wheel sensor connector contact 1 to frame ground.

Result

Expected result - the voltage is between 2.3 volts and 2.5 volts.

Results:

- Yes - the voltage is between 2.3 volts and 2.5 volts.

  step 3
- No - the voltage is not between 2.3 volts and 2.5 volts.

  Repair or replace the harness.

  step 4

b) Check the voltage from the steering wheel sensor connector contact 4 to frame ground.

Result

Expected result - the voltage is between 2.5 volts and 2.7 volts.

Results:

- Yes - the voltage is between 2.5 volts and 2.7 volts.

  step 3
- No - the voltage is not between 2.5 volts and 2.7 volts.

  Repair or replace the harness.

  step 4

4. Check if the diagnostic code remains.

a) Check and clean the harness connector contacts.
b) Connect all the connectors.
c) Turn the battery disconnect switch to the on position.
d) Turn the key start switch to the on position.
e) Operate the machine at low idle.
f) Check if the diagnostic code remains.

Result

Expected result - the diagnostic code is not active.

Results:

- Yes - SPN 1807 FMI 08 is not active.

  Stop.
- No - SPN 1807 FMI 08 is active.

  Failure of the steering module is possible but not common. Exit the procedure and do the procedure again. If the diagnostic code remains active, replace the module.

  Stop.

10.8.13.1 Steering assist module electrical schematic

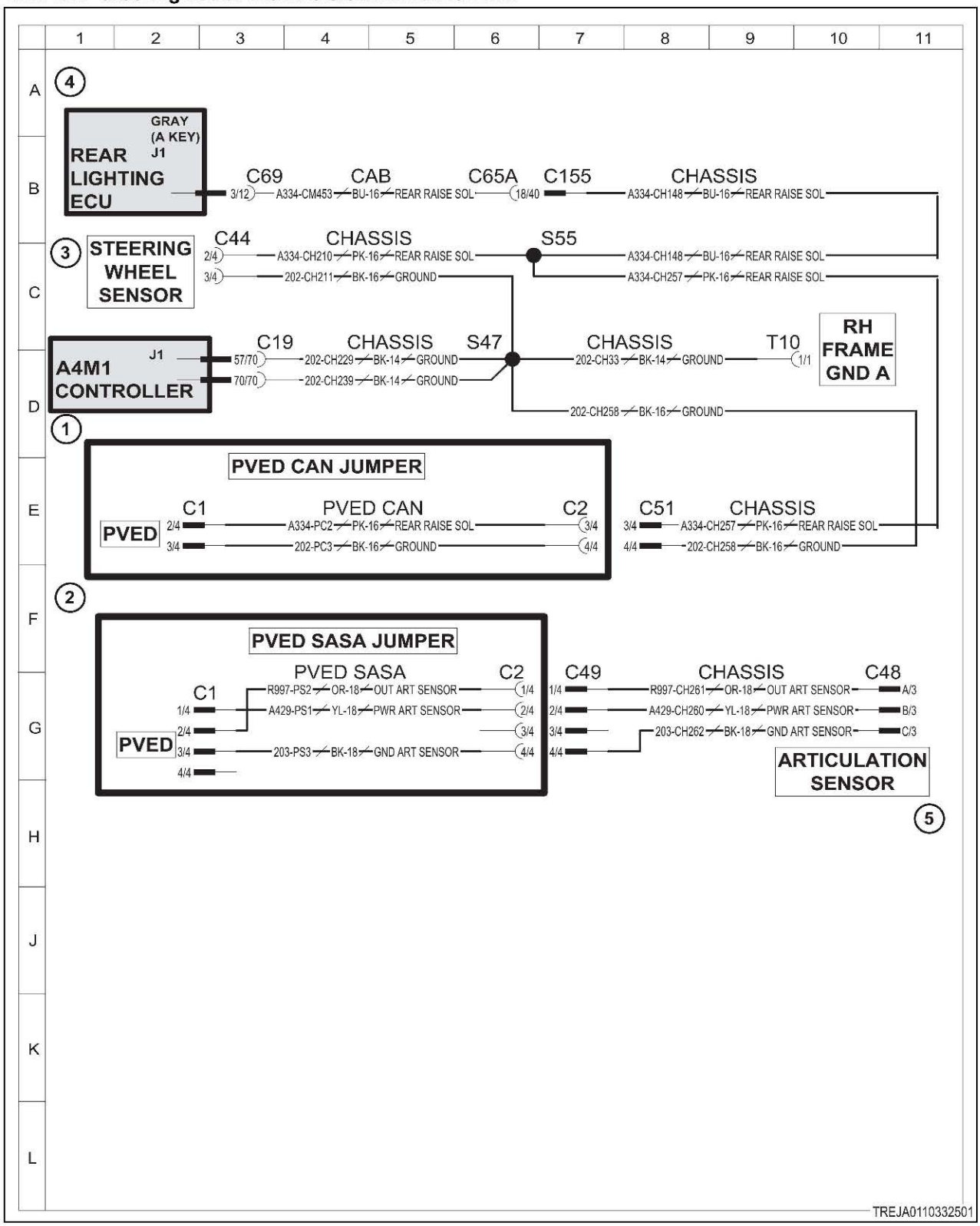

Fig. 620 Steering assist module schematic

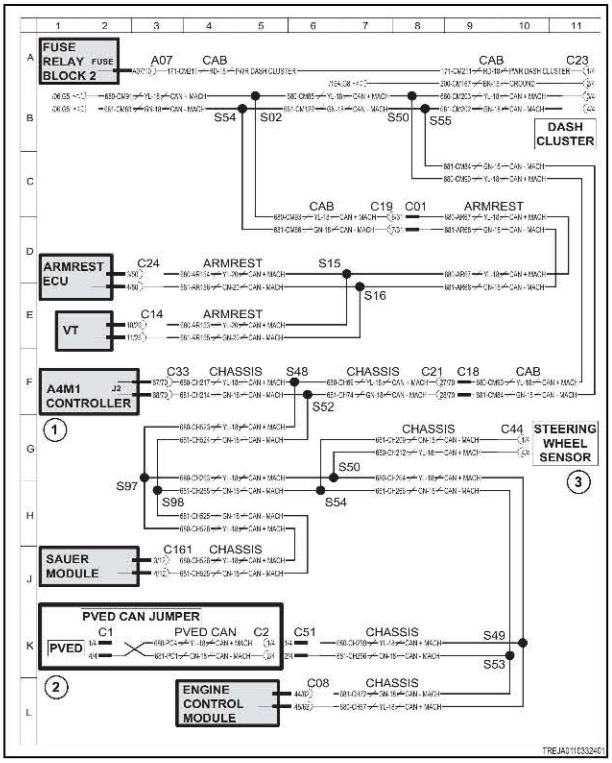

Fig. 621

10.8.14 Code SA 19 SPN 1807 FMI 09

The steering wheel angle abnormal rate update.

Diagnosis and solution

1. Check for power at the steering wheel sensor .

a) Turn the battery disconnect switch to the on position.

b) Turn the key start switch to the on position but do not start the engine.

c) Check the voltage from the steering wheel sensor connector contact 2 to frame ground.

Result

Expected result - voltage is 12 volts.

Results:

- Yes - voltage is 12 Volts.

  step 2
- No - voltage is not 12 volts.

  Repair or replace the harness.

  step 4

2. Check for short circuit to ground.

a) Turn the key start switch to the off position.

b) Turn the battery disconnect switch to the off position.

c) Remove the key from the battery disconnect switch.

d) Check resistance from the steering wheel sensor connector contact 3 to frame ground.

Result

Expected result - the resistance measurement are open circuit.

Results:

- Yes - the resistance measurement are open circuit.

  step 3
- No - the resistance measurement are open circuit.

  Repair or replace the harness.

  step 4

3. Check the steering wheel sensor CAN harness.

a) Check the voltage from the steering wheel sensor connector contact 1 to frame ground.

Result

Expected result - the voltage is between 2.3 volts and 2.5 volts.

Results:

- Yes - the voltage is between 2.3 volts and 2.5 volts.

  step 3
- No - the voltage is not between 2.3 volts and 2.5 volts.

  Repair or replace the harness.

  step 4

b) Check the voltage from the steering wheel sensor connector contact 4 to frame ground.

Result

Expected result - the voltage is between 2.5 volts and 2.7 volts.

Results:

- Yes - the voltage is between 2.5 volts and 2.7 volts.

  step 3
- No - the voltage is not between 2.5 volts and 2.7 volts.

  Repair or replace the harness.

  step 4

4. Check if the diagnostic code remains.

a) Check and clean the harness connector contacts.
b) Connect all the connectors.
c) Turn the battery disconnect switch to the on position.
d) Turn the key start switch to the on position.
e) Operate the machine at low idle.
f) Check if the diagnostic code remains.

Result

Expected result - the diagnostic code is not active.

Results:

- Yes - SPN 1807 FMI 09 is not active.

  Stop.
- No - SPN 1807 FMI 09 is active.

  Failure of the steering module is possible but not common. Exit the procedure and do the procedure again. If the diagnostic code remains active, replace the module.

  Stop.

10.8.14.1 Steering assist module electrical schematic

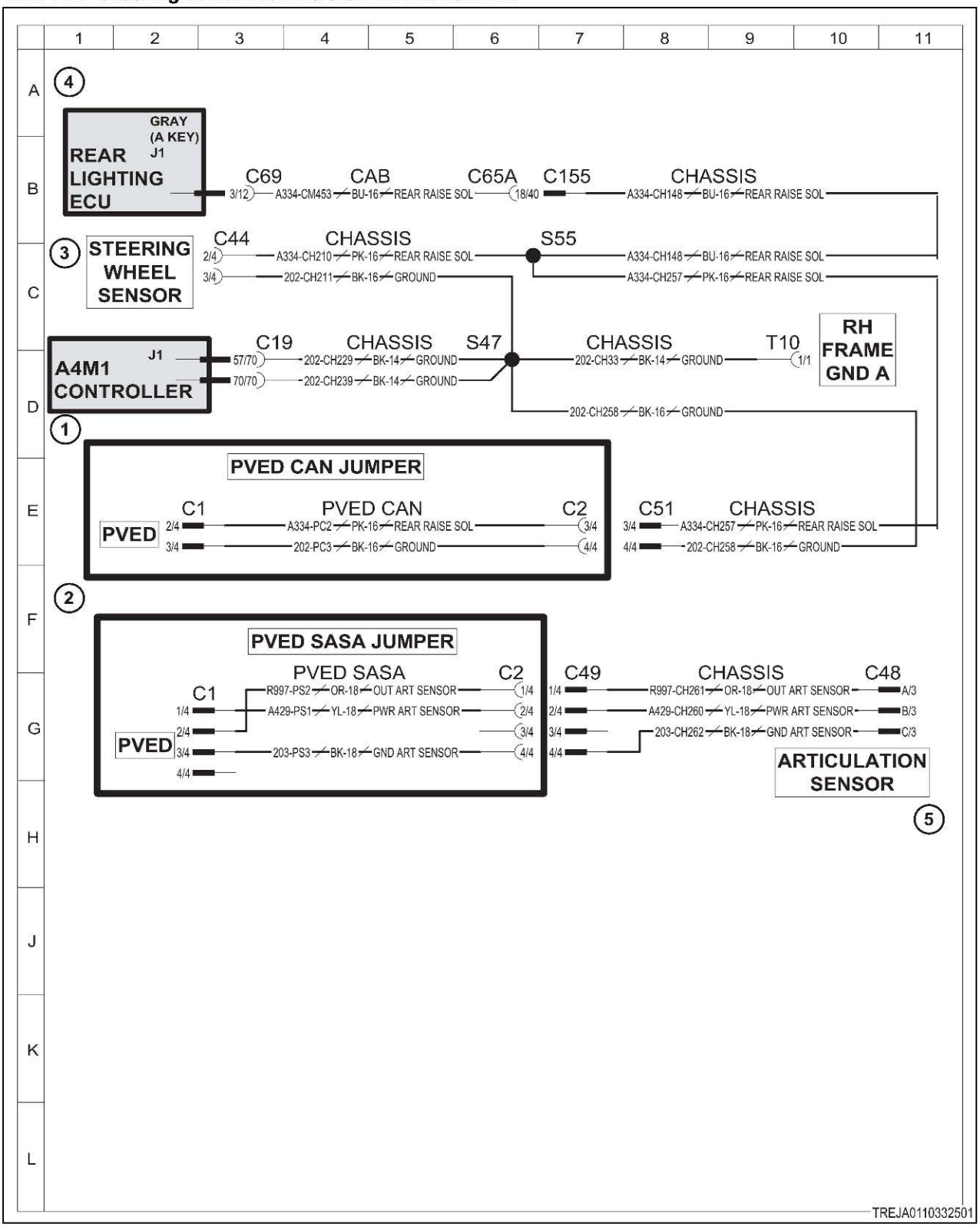

Fig. 622 Steering assist module schematic

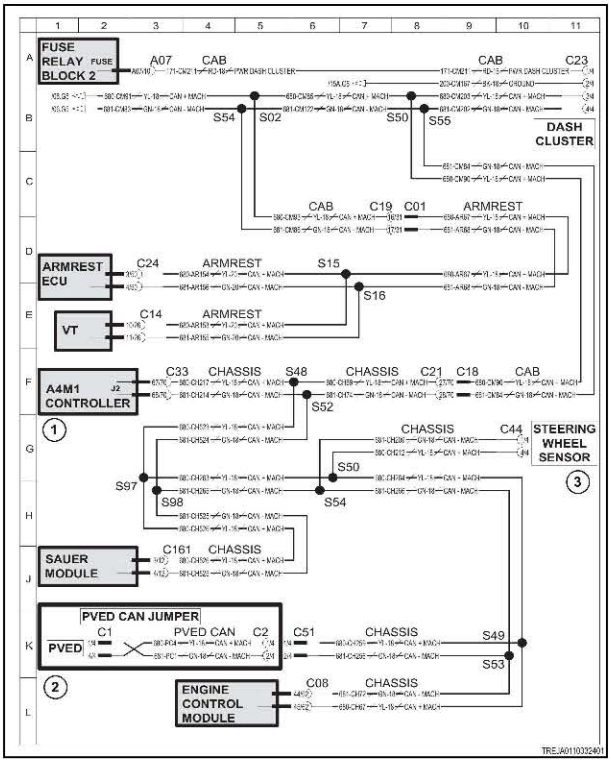
FUSE RELAY BLOCK 2
FUSE
A07
CAB
C23
DASH CLUSTER
S54
S02
S50
S55
CAB
C19
C01
ARMREST
ARMREST ECU
C24
S15
S16
VT
C14
A4M1 CONTROLLER
C33
CHASSIS
S48
C21
C18
S52
STEERING WHEEL SENSOR
C44
S97
S98
S54
SAUER MODULE
C161
PVED CAN JUMPER
PVED
C1
PVED CAN
C2
C51
S49
S53
ENGINE CONTROL MODULE
C08
TREJA0110332401

Fig. 623

10.9 161 Auxiliary valve 1 module

10.9.1 Code SA 161 SPN 158 FMI 00

Implement valve module 1 is reporting over-voltage.

The Implement valve controller module is reporting over-voltage in its supplied power. All Implement valves share the same 12-volt power circuit. Unless this error is also reported for all other Implement valve controllers, the reporting controller is faulty.

Diagnosis and solution

1. Check the voltage at the auxiliary valve module.

a) Turn the key start switch to the on position but do not start the engine.

b) Check the voltage between contacts 2 and 3 at the valve module connector.

Result

- The voltage is above 12 Volts.

  Troubleshoot the charging system.
- The voltage is at or near 12 volts.

  Replace the valve module.

  See step 2 to validate the repair.

2. Check if the diagnostic code remains.

a) Check and clean the harness connector contacts.

b) Connect all the connectors.

c) Turn the battery disconnect switch to the on position.

d) Turn the key start switch to the on position.

e) Operate the machine at low idle.

f) Check if the diagnostic code remains.

Result

- SA 161 SPN 158 FMI 00 is not active.

  Stop.
- SA 161 SPN 158 FMI 00 is active.

  Replace the valve module.

  Stop.

10.9.1.1 Auxiliary valves electrical schematic

Auxiliary valve assembly

Item	Description
1	Controller
2	Proportional solenoid
3	Directional solenoid

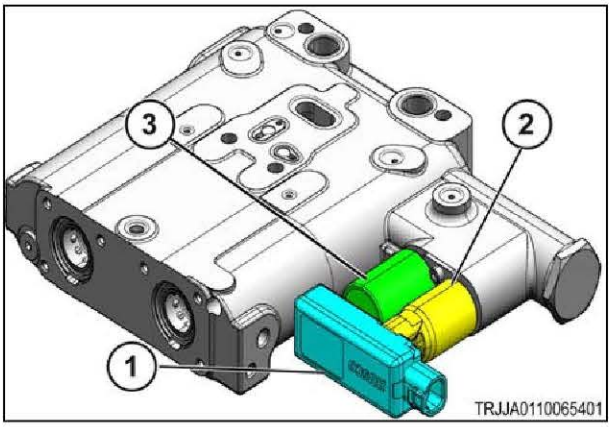

Fig. 624

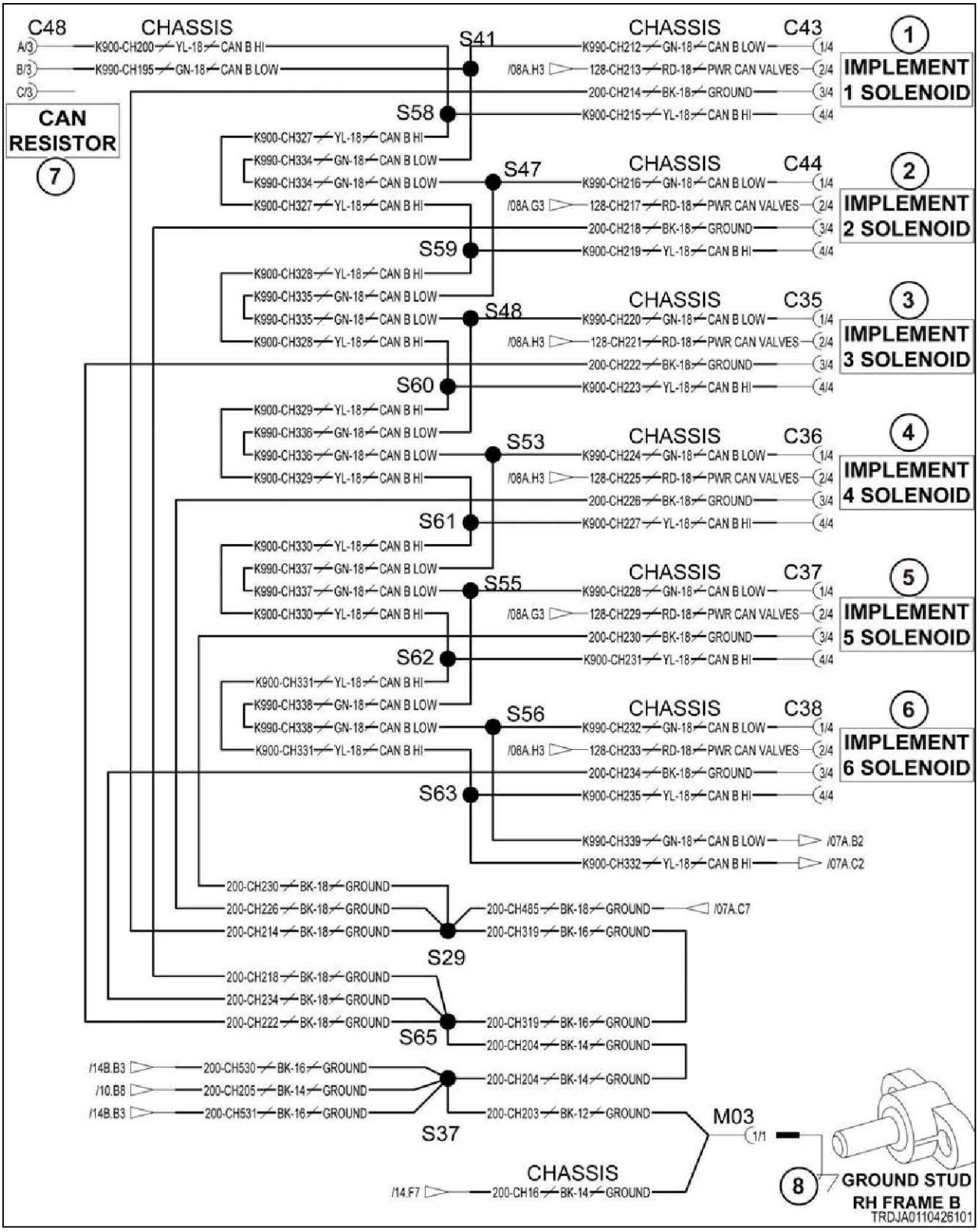
C48
CHASSIS
A/3
B/3
C/3
K900-CH200 YL-18 CAN B HI
K990-CH195 GN-18 CAN B LOW
CAN RESISTOR
7
S41
S58
S47
S59
S48
S60
S53
S61
S55
S62
S56
S63
S29
S65
S37
K900-CH327 YL-18 CAN B HI
K990-CH334 GN-18 CAN B LOW
K990-CH334 GN-18 CAN B LOW
K900-CH327 YL-18 CAN B HI
K900-CH328 YL-18 CAN B HI
K990-CH335 GN-18 CAN B LOW
K990-CH335 GN-18 CAN B LOW
K900-CH328 YL-18 CAN B HI
K900-CH329 YL-18 CAN B HI
K990-CH336 GN-18 CAN B LOW
K990-CH336 GN-18 CAN B LOW
K900-CH329 YL-18 CAN B HI
K900-CH330 YL-18 CAN B HI
K990-CH337 GN-18 CAN B LOW
K990-CH337 GN-18 CAN B LOW
K900-CH330 YL-18 CAN B HI
K900-CH331 YL-18 CAN B HI
K990-CH338 GN-18 CAN B LOW
K990-CH338 GN-18 CAN B LOW
K900-CH331 YL-18 CAN B HI
CHASSIS C43
K990-CH212 GN-18 CAN B LOW 1/4
/08A.H3 128-CH213 RD-18 PWR CAN VALVES 2/4
200-CH214 BK-18 GROUND 3/4
K900-CH215 YL-18 CAN B HI 4/4
1 IMPLEMENT 1 SOLENOID
CHASSIS C44
K990-CH216 GN-18 CAN B LOW 1/4
/08A.G3 128-CH217 RD-18 PWR CAN VALVES 2/4
200-CH218 BK-18 GROUND 3/4
K900-CH219 YL-18 CAN B HI 4/4
2 IMPLEMENT 2 SOLENOID
CHASSIS C35
K990-CH220 GN-18 CAN B LOW 1/4
/08A.H3 128-CH221 RD-18 PWR CAN VALVES 2/4
200-CH222 BK-18 GROUND 3/4
K900-CH223 YL-18 CAN B HI 4/4
3 IMPLEMENT 3 SOLENOID
CHASSIS C36
K990-CH224 GN-18 CAN B LOW 1/4
/08A.H3 128-CH225 RD-18 PWR CAN VALVES 2/4
200-CH226 BK-18 GROUND 3/4
K900-CH227 YL-18 CAN B HI 4/4
4 IMPLEMENT 4 SOLENOID
CHASSIS C37
K990-CH228 GN-18 CAN B LOW 1/4
/08A.G3 128-CH229 RD-18 PWR CAN VALVES 2/4
200-CH230 BK-18 GROUND 3/4
K900-CH231 YL-18 CAN B HI 4/4
5 IMPLEMENT 5 SOLENOID
CHASSIS C38
K990-CH232 GN-18 CAN B LOW 1/4
/08A.H3 128-CH233 RD-18 PWR CAN VALVES 2/4
200-CH234 BK-18 GROUND 3/4
K900-CH235 YL-18 CAN B HI 4/4
6 IMPLEMENT 6 SOLENOID
K990-CH339 GN-18 CAN B LOW /07A.B2
K900-CH332 YL-18 CAN B HI /07A.C2
200-CH230 BK-18 GROUND
200-CH226 BK-18 GROUND
200-CH214 BK-18 GROUND
200-CH485 BK-18 GROUND /07A.C7
200-CH319 BK-16 GROUND
200-CH218 BK-18 GROUND
200-CH234 BK-18 GROUND
200-CH222 BK-18 GROUND
200-CH319 BK-16 GROUND
200-CH204 BK-14 GROUND
/14B.B3 200-CH530 BK-16 GROUND
/10.B8 200-CH205 BK-14 GROUND
/14B.B3 200-CH531 BK-16 GROUND
200-CH204 BK-14 GROUND
200-CH203 BK-12 GROUND
M03
1/1
CHASSIS
/14.F7 200-CH16 BK-14 GROUND
8
GROUND STUD
RH FRAME B
TRDJA0110426101

Fig. 625

Schematic legend		
Item	**Schematic term**	**Description**
1	IMPLEMENT 1 SOLENOID	Implement 1 solenoid
2	IMPLEMENT 2 SOLENOID	Implement 2 solenoid
3	IMPLEMENT 3 SOLENOID	Implement 3 solenoid
4	IMPLEMENT 4 SOLENOID	Implement 4 solenoid
5	IMPLEMENT 5 SOLENOID	Implement 5 solenoid
6	IMPLEMENT 6 SOLENOID	Implement 6 solenoid
7	CAN RESISTOR	Controller area network (CAN) resistor
8	GROUND STUD RH FRAME B	Ground stud right-hand frame B
--	CAN B LOW	Controller area network (CAN) B low
--	CAN B HI	Controller area network (CAN) B high
--	PWR CAN VALVES	Power controller area network (CAN) valves
--	CAN + AUX	Controller area network (CAN) high auxiliary
--	CAN - AUX	Controller area network (CAN) low auxiliary

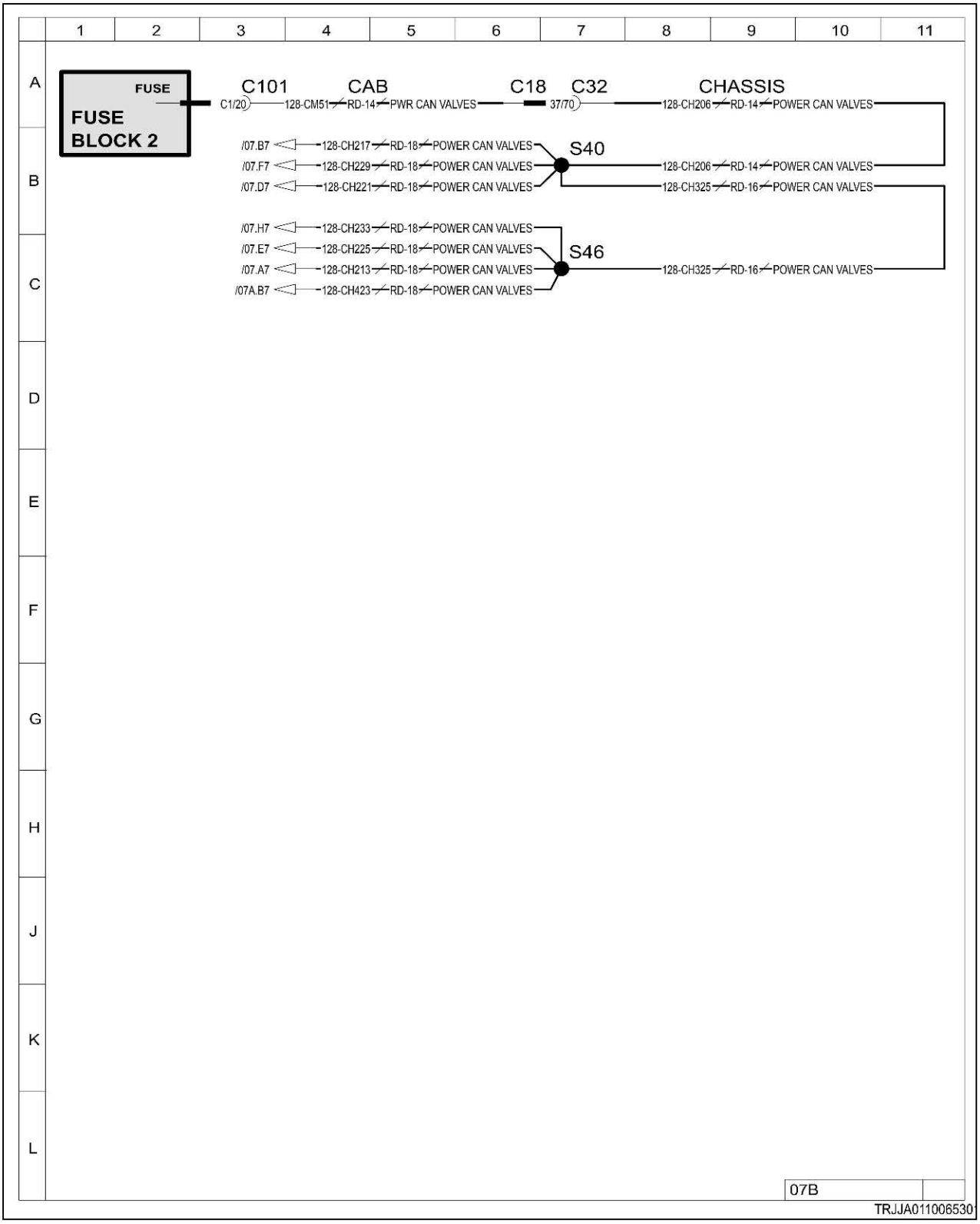

Fig. 626

10.9.2 Code SA 161 SPN 158 FMI 18

Implement valve module 1 is reporting under-voltage.

The implement valve controller module is reporting under-voltage in its supplied power. All implement valves share the same 12-volt power circuit. Unless this error is also reported for all other implement valve controllers, the fault likely lies at or near the reporting valve controller.

Diagnosis and solution

1. Check the voltage at the implement valve module.

a) Turn the key start switch to the on position but do not start the engine.

b) Check the voltage between contacts 2 and 3 at the valve module connector.

Result

- The voltage is at or near 12 volts.

  Replace the valve module.

  See step 3 to validate the repair.
- The voltage is below 12 Volts.

  Continue.

c) Check the voltage between contacts 2 and 3 of a nearby implement valve module connector, which is not reporting this same error.

Result

- All valves are reporting this same error.

  See step 2 to trace power and ground circuits.
- The voltage at this adjacent module is at or near 12 Volts.

  The fault in power is local to the valve module(s) that are reporting the error.

  Repair or replace the harness at the affected valve module(s).

  See step 3 to validate the repair.

2. Isolate the source of the voltage drop.

a) Check the voltage between fuse block 2, fuse 1 and chassis ground.

Result

- The voltage is below 12 volts.

  Inspect the fuse socket and fuse for corrosion.

  See step 3 to validate the repair.
- The voltage is at or near 12 Volts.

  Continue.

b) Check the voltage between contact 37 and chassis ground at the cab harness to chassis harness connector (C18 & C32).

Result

- The voltage is below 12 volts.

  Repair or replace the cab harness.

  See step 3 to validate the repair.
- The voltage is at or near 12 Volts.

  Repair or replace the chassis harness.

  See step 3 to validate the repair.

3. Check if the diagnostic code remains.

a) Inspect and clean the harness connector contacts.

b) Connect all the connectors.

c) Turn the battery disconnect switch to the on position.

d) Turn the key start switch to the on position.

e) Operate the machine at low idle.

f) Check if the diagnostic code remains.

Result

- SA 161 SPN 158 FMI 18 is not active.

  Stop.
- SA 161 SPN 158 FMI 18 is active.

  If the diagnostic code remains active, replace the valve module.

  Stop.

10.9.2.1 Auxiliary valves electrical schematic

Auxiliary valve assembly

Item	Description
1	Controller
2	Proportional solenoid
3	Directional solenoid

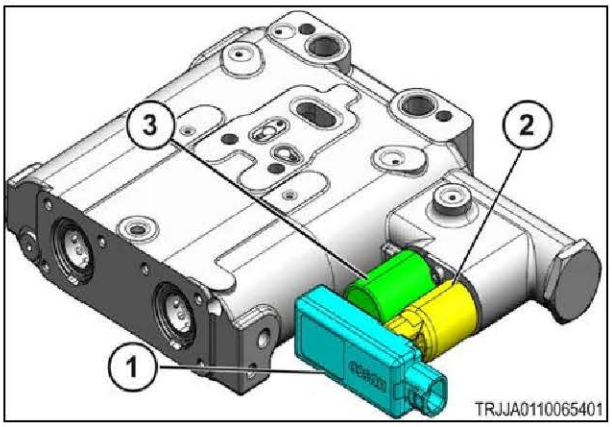

Fig. 627

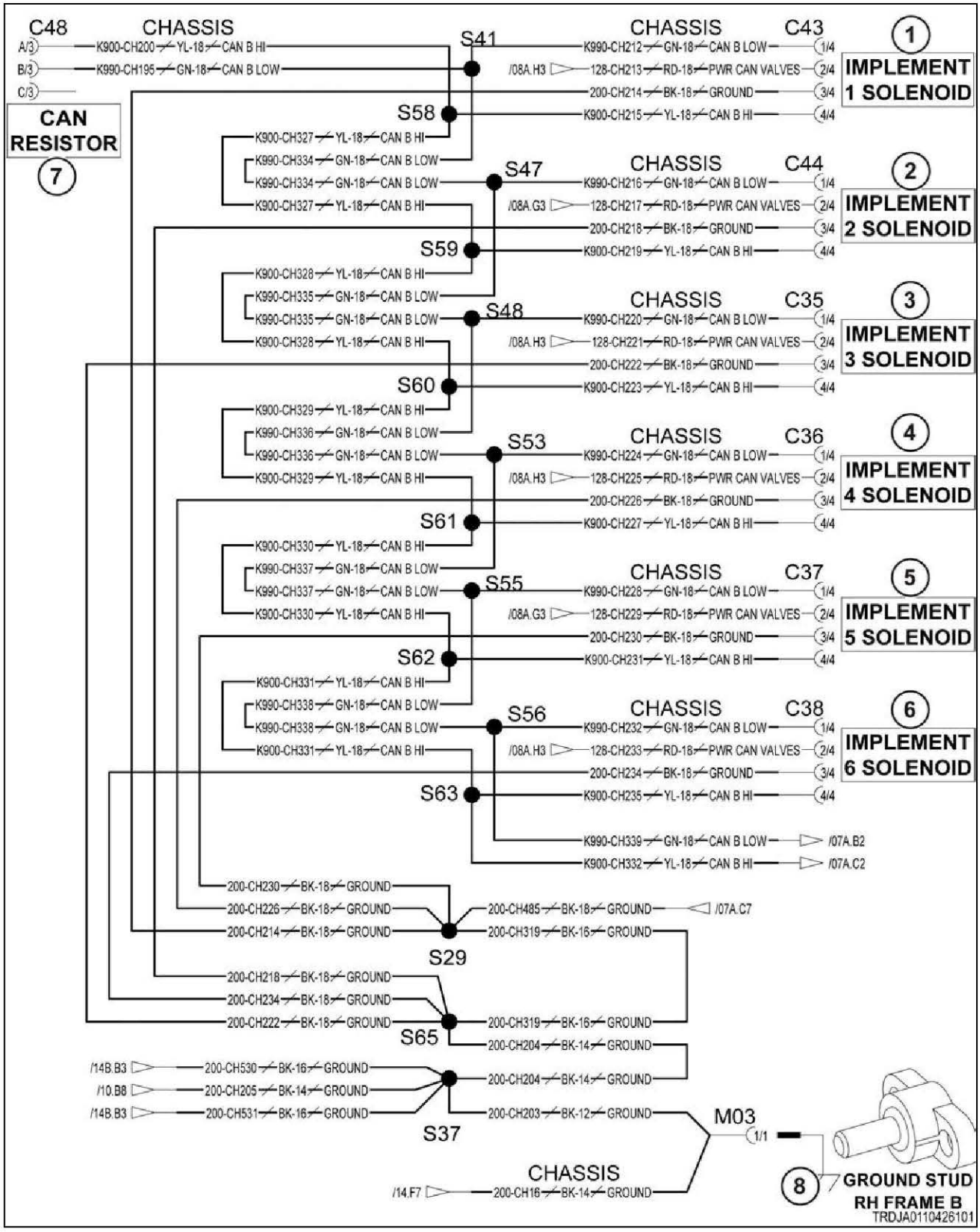
C48
CHASSIS
A/3
B/3
C/3
K900-CH200 YL-18 CAN B HI
K990-CH195 GN-18 CAN B LOW
CAN RESISTOR
7
S41
S58
S47
S59
S48
S60
S53
S61
S55
S62
S56
S63
S29
S65
S37
CHASSIS C43
K990-CH212 GN-18 CAN B LOW 1/4
/08A.H3 128-CH213 RD-18 PWR CAN VALVES 2/4
200-CH214 BK-18 GROUND 3/4
K900-CH215 YL-18 CAN B HI 4/4
1 IMPLEMENT 1 SOLENOID
CHASSIS C44
K990-CH216 GN-18 CAN B LOW 1/4
/08A.G3 128-CH217 RD-18 PWR CAN VALVES 2/4
200-CH218 BK-18 GROUND 3/4
K900-CH219 YL-18 CAN B HI 4/4
2 IMPLEMENT 2 SOLENOID
CHASSIS C35
K990-CH220 GN-18 CAN B LOW 1/4
/08A.H3 128-CH221 RD-18 PWR CAN VALVES 2/4
200-CH222 BK-18 GROUND 3/4
K900-CH223 YL-18 CAN B HI 4/4
3 IMPLEMENT 3 SOLENOID
CHASSIS C36
K990-CH224 GN-18 CAN B LOW 1/4
/08A.H3 128-CH225 RD-18 PWR CAN VALVES 2/4
200-CH226 BK-18 GROUND 3/4
K900-CH227 YL-18 CAN B HI 4/4
4 IMPLEMENT 4 SOLENOID
CHASSIS C37
K990-CH228 GN-18 CAN B LOW 1/4
/08A.G3 128-CH229 RD-18 PWR CAN VALVES 2/4
200-CH230 BK-18 GROUND 3/4
K900-CH231 YL-18 CAN B HI 4/4
5 IMPLEMENT 5 SOLENOID
CHASSIS C38
K990-CH232 GN-18 CAN B LOW 1/4
/08A.H3 128-CH233 RD-18 PWR CAN VALVES 2/4
200-CH234 BK-18 GROUND 3/4
K900-CH235 YL-18 CAN B HI 4/4
6 IMPLEMENT 6 SOLENOID
K990-CH339 GN-18 CAN B LOW /07A.B2
K900-CH332 YL-18 CAN B HI /07A.C2
K900-CH327 YL-18 CAN B HI
K990-CH334 GN-18 CAN B LOW
K990-CH334 GN-18 CAN B LOW
K900-CH327 YL-18 CAN B HI
K900-CH328 YL-18 CAN B HI
K990-CH335 GN-18 CAN B LOW
K990-CH335 GN-18 CAN B LOW
K900-CH328 YL-18 CAN B HI
K900-CH329 YL-18 CAN B HI
K990-CH336 GN-18 CAN B LOW
K990-CH336 GN-18 CAN B LOW
K900-CH329 YL-18 CAN B HI
K900-CH330 YL-18 CAN B HI
K990-CH337 GN-18 CAN B LOW
K990-CH337 GN-18 CAN B LOW
K900-CH330 YL-18 CAN B HI
K900-CH331 YL-18 CAN B HI
K990-CH338 GN-18 CAN B LOW
K990-CH338 GN-18 CAN B LOW
K900-CH331 YL-18 CAN B HI
200-CH230 BK-18 GROUND
200-CH226 BK-18 GROUND
200-CH214 BK-18 GROUND
200-CH485 BK-18 GROUND /07A.C7
200-CH319 BK-16 GROUND
200-CH218 BK-18 GROUND
200-CH234 BK-18 GROUND
200-CH222 BK-18 GROUND
200-CH319 BK-16 GROUND
200-CH204 BK-14 GROUND
/14B.B3 200-CH530 BK-16 GROUND
/10.B8 200-CH205 BK-14 GROUND
/14B.B3 200-CH531 BK-16 GROUND
200-CH204 BK-14 GROUND
200-CH203 BK-12 GROUND
M03
1/1
8
GROUND STUD RH FRAME B
CHASSIS
/14.F7 200-CH16 BK-14 GROUND
TRDJA0110426101

Fig. 628

Schematic legend		
Item	**Schematic term**	**Description**
1	IMPLEMENT 1 SOLENOID	Implement 1 solenoid
2	IMPLEMENT 2 SOLENOID	Implement 2 solenoid
3	IMPLEMENT 3 SOLENOID	Implement 3 solenoid
4	IMPLEMENT 4 SOLENOID	Implement 4 solenoid
5	IMPLEMENT 5 SOLENOID	Implement 5 solenoid
6	IMPLEMENT 6 SOLENOID	Implement 6 solenoid
7	CAN RESISTOR	Controller area network (CAN) resistor
8	GROUND STUD RH FRAME B	Ground stud right-hand frame B
--	CAN B LOW	Controller area network (CAN) B low
--	CAN B HI	Controller area network (CAN) B high
--	PWR CAN VALVES	Power controller area network (CAN) valves
--	CAN + AUX	Controller area network (CAN) high auxiliary
--	CAN - AUX	Controller area network (CAN) low auxiliary

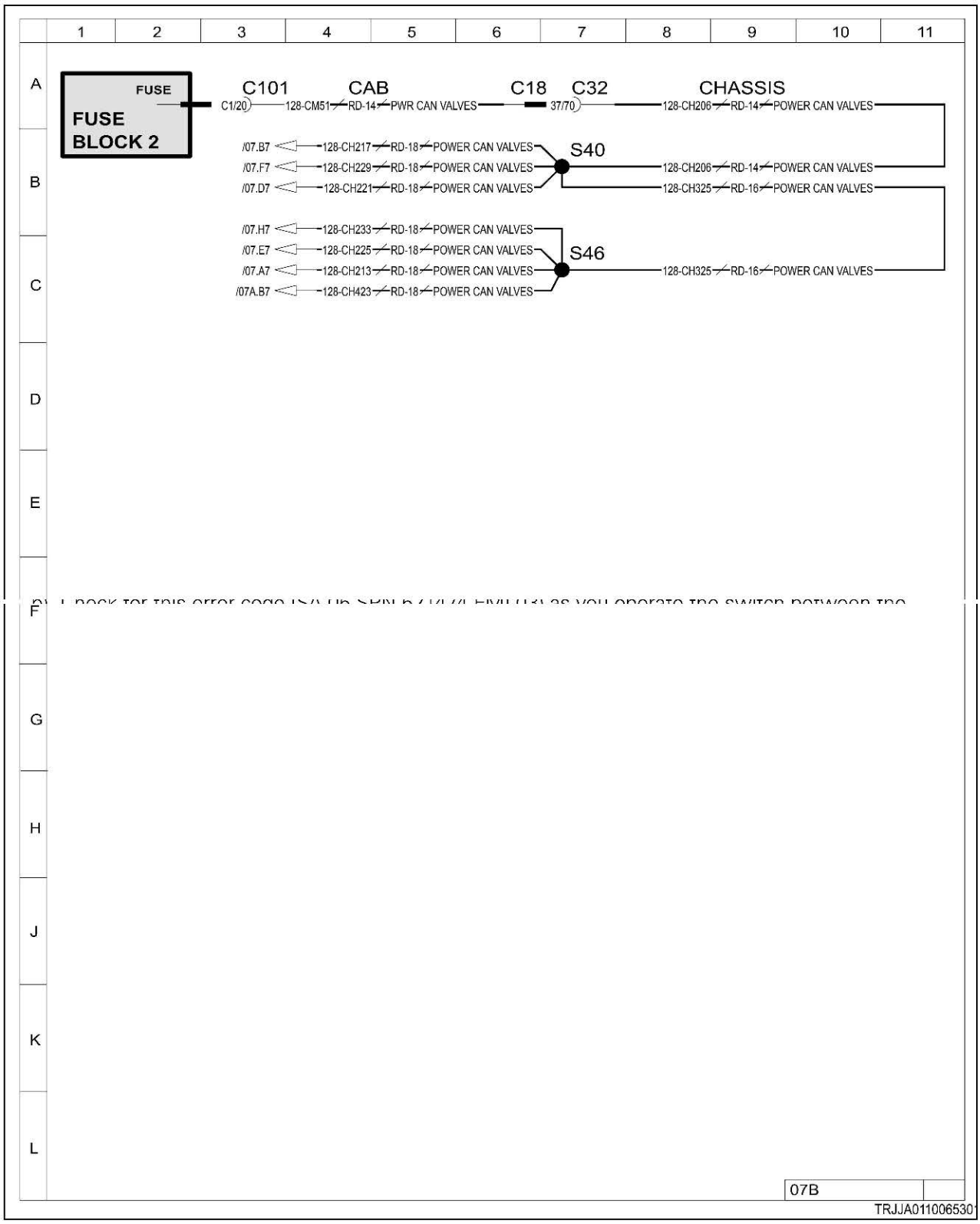

Fig. 629

10.9.3 Code SA 161 SPN 628 FMI 12

Implement valve 1 program memory - malfunction.

Each implement valve has its own controller module, which operates the proportional and directional solenoids. Those solenoids are directly connected to the bottom of each control module. The likely cause for this error is a faulty valve control module.

Diagnosis and solution

1. Reset the module.

a) Turn the key start switch to the off position.
b) Wait 60 seconds.
c) Turn the key start switch to the on position.
d) Check for the fault code.

Result

- The fault code is not active.

  Stop.
- The fault code is active.

  Replace the valve controller.

  See the hydraulics chapter in the service manual to properly program and set up the new controller.

2. Check if the fault code remains.

a) Inspect and clean the harness connector contacts.
b) Connect all the connectors.
c) Turn the battery disconnect switch to the on position.
d) Turn the key start switch to the on position.
e) Operate the machine at low idle.
f) Check for the fault code.

Result

- The fault code is not active.

  Stop.
- The fault code is active.

  Exit the procedure and do the procedure again.

  Stop.

10.9.3.1 CAN 2 electrical schematic

Auxiliary valve assembly

Item	Description
1	Controller
2	Proportional solenoid
3	Directional solenoid

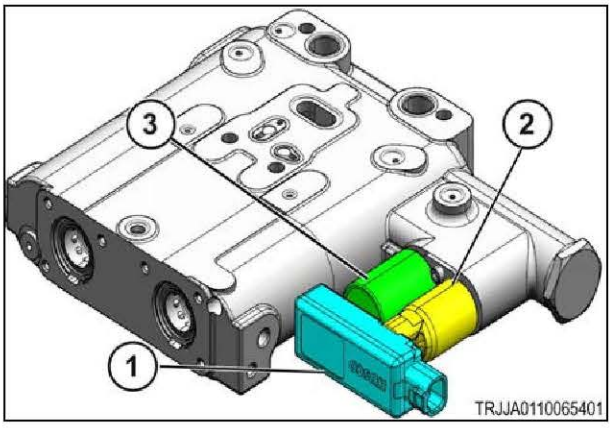

Fig. 630

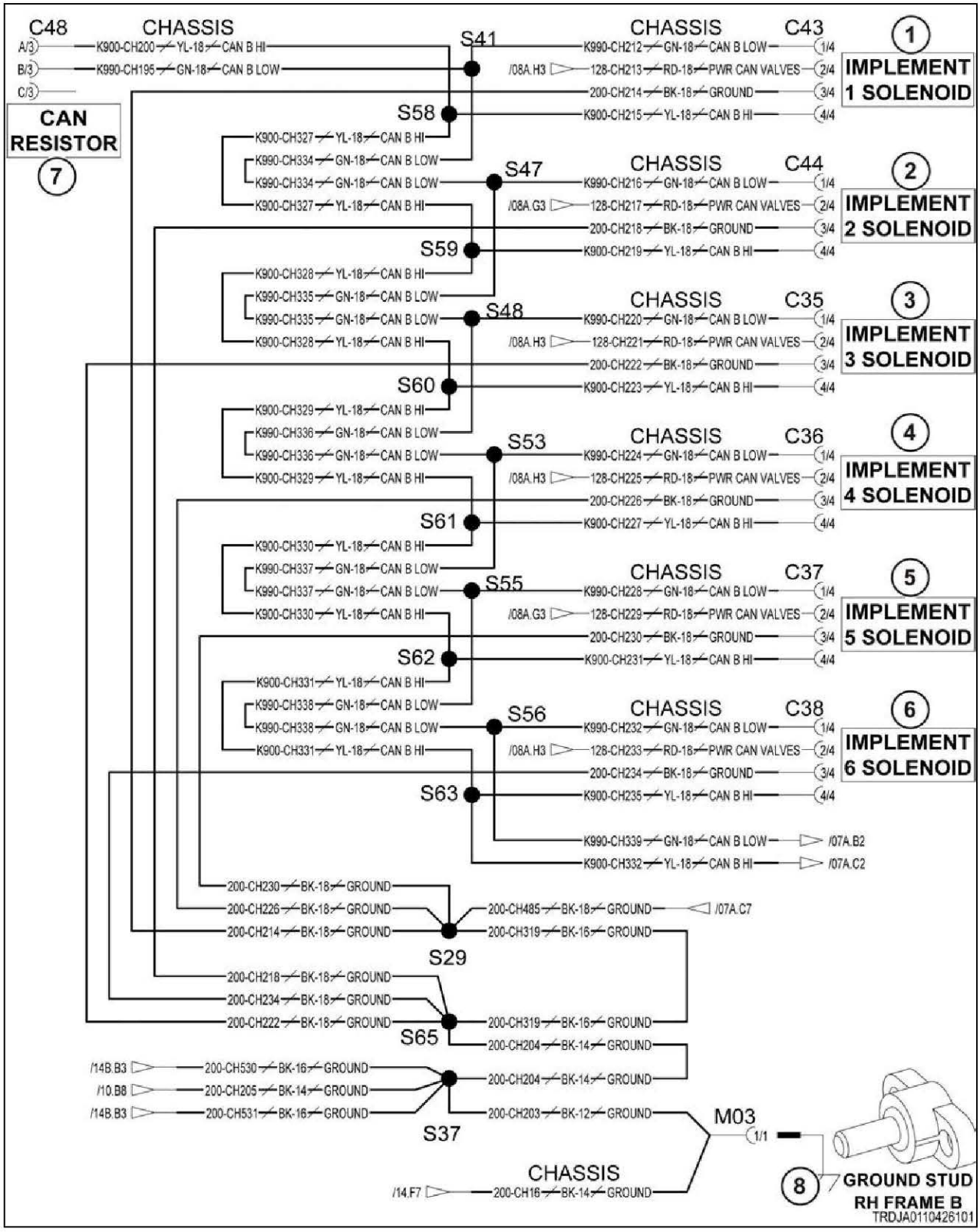
C48
CHASSIS
A/3
K900-CH200
YL-18
CAN B HI
B/3
K990-CH195
GN-18
CAN B LOW
C/3
CAN RESISTOR
7
S41
S58
S47
S59
S48
S60
S53
S61
S55
S62
S56
S63
S29
S65
S37
CHASSIS
C43
K990-CH212
GN-18
CAN B LOW
1/4
/08A.H3
128-CH213
RD-18
PWR CAN VALVES
2/4
200-CH214
BK-18
GROUND
3/4
K900-CH215
YL-18
CAN B HI
4/4
1
IMPLEMENT 1 SOLENOID
CHASSIS
C44
K990-CH216
GN-18
CAN B LOW
1/4
/08A.G3
128-CH217
RD-18
PWR CAN VALVES
2/4
200-CH218
BK-18
GROUND
3/4
K900-CH219
YL-18
CAN B HI
4/4
2
IMPLEMENT 2 SOLENOID
CHASSIS
C35
K990-CH220
GN-18
CAN B LOW
1/4
/08A.H3
128-CH221
RD-18
PWR CAN VALVES
2/4
200-CH222
BK-18
GROUND
3/4
K900-CH223
YL-18
CAN B HI
4/4
3
IMPLEMENT 3 SOLENOID
CHASSIS
C36
K990-CH224
GN-18
CAN B LOW
1/4
/08A.H3
128-CH225
RD-18
PWR CAN VALVES
2/4
200-CH226
BK-18
GROUND
3/4
K900-CH227
YL-18
CAN B HI
4/4
4
IMPLEMENT 4 SOLENOID
CHASSIS
C37
K990-CH228
GN-18
CAN B LOW
1/4
/08A.G3
128-CH229
RD-18
PWR CAN VALVES
2/4
200-CH230
BK-18
GROUND
3/4
K900-CH231
YL-18
CAN B HI
4/4
5
IMPLEMENT 5 SOLENOID
CHASSIS
C38
K990-CH232
GN-18
CAN B LOW
1/4
/08A.H3
128-CH233
RD-18
PWR CAN VALVES
2/4
200-CH234
BK-18
GROUND
3/4
K900-CH235
YL-18
CAN B HI
4/4
6
IMPLEMENT 6 SOLENOID
K990-CH339
GN-18
CAN B LOW
/07A.B2
K900-CH332
YL-18
CAN B HI
/07A.C2
K900-CH327
YL-18
CAN B HI
K990-CH334
GN-18
CAN B LOW
K990-CH334
GN-18
CAN B LOW
K900-CH327
YL-18
CAN B HI
K900-CH328
YL-18
CAN B HI
K990-CH335
GN-18
CAN B LOW
K990-CH335
GN-18
CAN B LOW
K900-CH328
YL-18
CAN B HI
K900-CH329
YL-18
CAN B HI
K990-CH336
GN-18
CAN B LOW
K990-CH336
GN-18
CAN B LOW
K900-CH329
YL-18
CAN B HI
K900-CH330
YL-18
CAN B HI
K990-CH337
GN-18
CAN B LOW
K990-CH337
GN-18
CAN B LOW
K900-CH330
YL-18
CAN B HI
K900-CH331
YL-18
CAN B HI
K990-CH338
GN-18
CAN B LOW
K990-CH338
GN-18
CAN B LOW
K900-CH331
YL-18
CAN B HI
200-CH230
BK-18
GROUND
200-CH226
BK-18
GROUND
200-CH214
BK-18
GROUND
200-CH485
BK-18
GROUND
/07A.C7
200-CH319
BK-16
GROUND
200-CH218
BK-18
GROUND
200-CH234
BK-18
GROUND
200-CH222
BK-18
GROUND
200-CH319
BK-16
GROUND
200-CH204
BK-14
GROUND
/14B.B3
200-CH530
BK-16
GROUND
/10.B8
200-CH205
BK-14
GROUND
/14B.B3
200-CH531
BK-16
GROUND
200-CH204
BK-14
GROUND
200-CH203
BK-12
GROUND
M03
1/1
CHASSIS
/14.F7
200-CH16
BK-14
GROUND
8
GROUND STUD RH FRAME B
TRDJA0110426101

Fig. 631

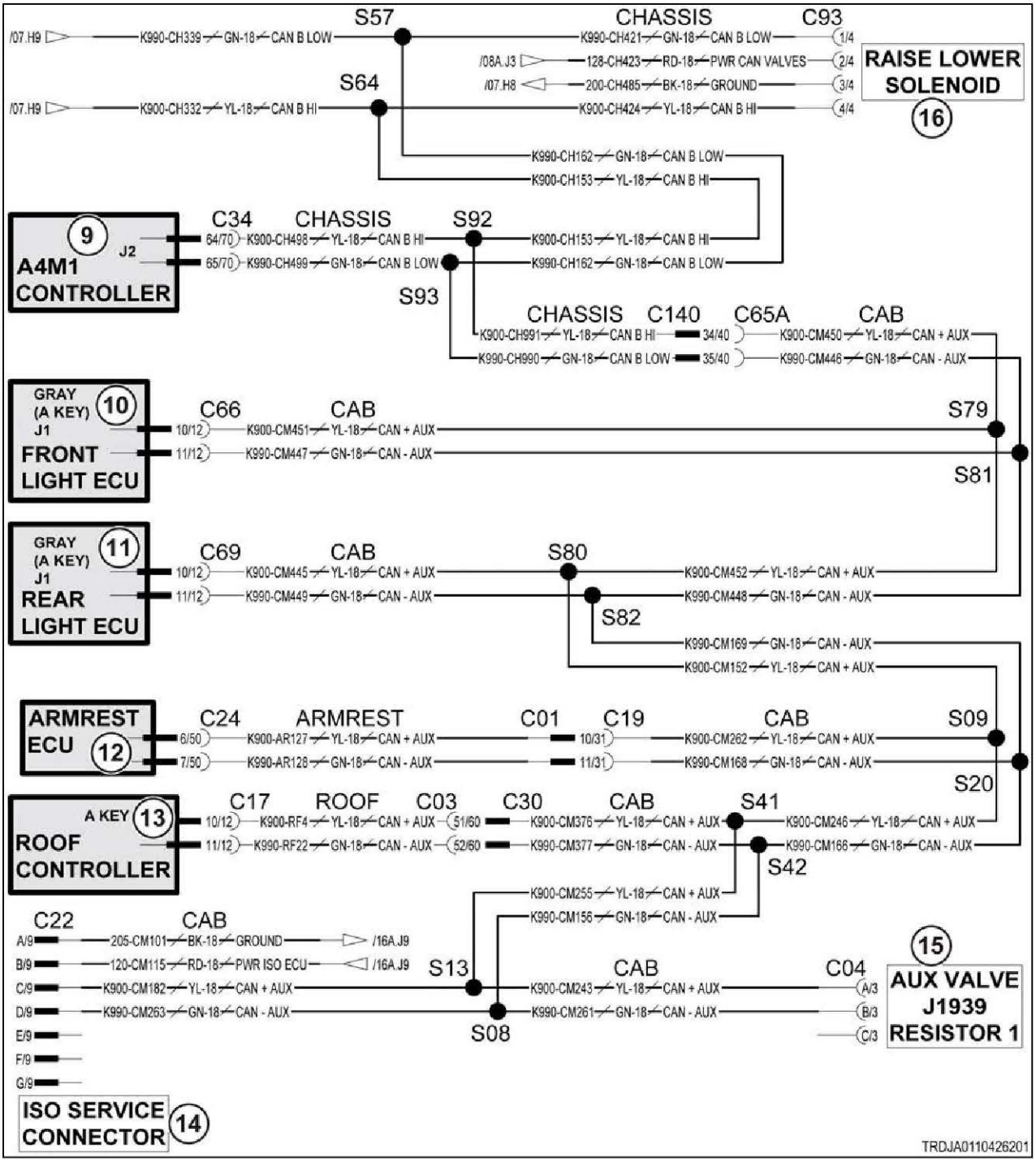

Fig. 632

Schematic legend		
Item	**Schematic term**	**Description**
1	IMPLEMENT 1 SOLENOID	Implement 1 solenoid
2	IMPLEMENT 2 SOLENOID	Implement 2 solenoid
3	IMPLEMENT 3 SOLENOID	Implement 3 solenoid
4	IMPLEMENT 4 SOLENOID	Implement 4 solenoid
5	IMPLEMENT 5 SOLENOID	Implement 5 solenoid
6	IMPLEMENT 6 SOLENOID	Implement 6 solenoid

Schematic legend		
Item	Schematic term	Description
7	CAN RESISTOR	Controller area network (CAN) terminator
8	GROUND STUD RH FRAME B	Ground stud right-hand frame B
9	A4M1 CONTROLLER	Transmission module
10	FRONT LIGHT ECU	Front lighting module
11	REAR LIGHT ECU	Rear lighting module
12	ARMREST ECU	Armrest module
13	ROOF CONTROLLER	Roof module
14	ISO SERVICE CONNECTOR	ISO service connector
15	AUX VALVE J1939 RESISTOR 1	Controller area network (CAN) terminator
16	RAISE LOWER SOLENOID	Raise/lower solenoid
--	CAN B LOW	Controller area network (CAN) B low
--	CAN B HI	Controller area network (CAN) B high
--	PWR CAN VALVES	Power controller area network (CAN) valves
--	CAN + AUX	Controller area network (CAN) high auxiliary
--	CAN - AUX	Controller area network (CAN) low auxiliary

10.9.4 Code SA 161 SPN 639 FMI 19

The controller area network (CAN) is not communicating correctly. The conditions defined by the software were not met.

Diagnosis and solution

1. Make sure the part numbers are correct

- Auxiliary valve 1 module software part number
- Auxiliary valve 1 module part number

Result

Expected result - all part numbers are correct.

Results:

- Yes - all part numbers are correct.

  see step 2, page 10-1067
- No - one or more part number is not correct.

  Install the correct module and flash the correct software.

  see step 3, page 10-1068

2. Inspect the harness connections.

a) Turn the key start switch to the off position.
b) Turn the battery disconnect switch to the off position.
c) Remove the key from the battery disconnect switch.
d) Inspect all harness connections.

Result

Expected result - harness connectors are good.

Results:

- Yes - harness connections are good.

  see step 3, page 10-1068
- No - harness connections are not good.

  Repair or replace the harness.

  see step 3, page 10-1068

3. Check for other diagnostic codes for this module.

a) Turn the key start switch to the off position.
b) Turn the battery disconnect switch to the off position.
c) Remove the key from the battery disconnect switch.
d) Connect the module using the controller area network (CAN) data link.
e) Turn the battery disconnect switch to the on position.
f) Turn the key start switch to the on position.
g) Check for active diagnostic codes for this module.

Result

Expected result - no diagnostic codes are present for this module.

Results:

- Yes - no diagnostic codes are present.

  Stop.
- No - diagnostic codes are present for this module.

  Failure of this module is possible but not common. Exit the procedure and troubleshoot the active codes. If the diagnostic codes remain active, replace the module.

  Stop.

10.9.5 Code SA 161 SPN 701 FMI 05

Implement valve 1 proportional solenoid is disconnected.

Each implement valve has its own controller module, which operates the proportional and directional solenoids. Those solenoids are directly connected to the bottom of each control module. The likely cause for this error is a faulty solenoid.

Diagnosis and solution

1. Inspect the controller-to-solenoid connections.

a) Turn the key start switch to the off position.
b) Carefully release the controller from both solenoids.

   Each solenoid has a connector retainer. Both must be released to lift the controller away from the solenoids.
c) Clean and inspect the contacts on the controller and both solenoids.
d) Reinstall the controller and all electrical connectors.
e) Turn the key start switch to the on position.
f) Operate the implement valve.
g) Check if the diagnostic code persists.

Result

- The diagnostic code is not active.

  Stop.
- The diagnostic code is active.

  Continue to step 2 to isolate the problem.

2. Temporarily swap adjacent controllers to isolate the problem.

Note that the function will follow the controller. In the cab, auxiliary control lever 1 will still control the original controller at its new location, and the source address (SA) of the diagnostic code will also follow that module.

a) Turn the key start switch to the off position.
b) Number the controller modules for later identification.
c) Swap the controllers from the current valve and one of the other valves that is not reporting any errors.
d) Turn the key start switch to the on position.
e) Operate both implement valves.
f) Check for diagnostic codes.

Result

- The original diagnostic code is still reported.

  The valve controller is at fault.

  Replace the valve controller.

  See the hydraulics chapter in the service manual to properly program and set up the new controller.
- The source address (SA) of the diagnostic code changed to a different location.

  The original solenoid is at fault, and the temporary controller has detected the same error.

  Replace the proportional solenoid.

  See the hydraulics chapter in the service manual to properly set up the old controller for its new solenoid.

g) **Important**: Make sure to return the swapped controllers back to their original location.

3. Check if the diagnostic code remains.
a) Inspect and clean the harness connector contacts.
b) Connect all the connectors.
c) Turn the battery disconnect switch to the on position.
d) Turn the key start switch to the on position.
e) Operate the machine at low idle.
f) Check if the diagnostic code remains.

Result

- SA 161 SPN 701 FMI 05 is not active.

  Stop.
- SA 161 SPN 701 FMI 05 is active.

  Failure of the auxiliary valve module is possible but not common. Exit the procedure and do the procedure again. If the diagnostic code remains active, replace the module.

  Stop.

10.9.6 Code SA 161 SPN 701 FMI 06

Implement valve 1 proportional solenoid has excessive current.

Each implement valve has its own controller module, which operates the proportional and directional solenoids. Those solenoids are directly connected to the bottom of each control module. The likely cause for this error is a faulty solenoid.

Diagnosis and solution

1. Inspect the controller-to-solenoid connections.
a) Turn the key start switch to the off position.
b) Carefully release the controller from both solenoids.

Each solenoid has a connector retainer. Both must be released to lift the controller away from the solenoids.

c) Clean and inspect the contacts on the controller and both solenoids.
d) Reinstall the controller and all electrical connectors.
e) Turn the key start switch to the on position.
f) Operate the implement valve.
g) Check if the diagnostic code persists.

Result

- The diagnostic code is not active.

  Stop.
- The diagnostic code is active.

  Continue to step 2 to isolate the problem.

2. Temporarily swap adjacent controllers to isolate the problem.

Note that the function will follow the controller. In the cab, auxiliary control lever 1 will still control the original controller at its new location, and the source address (SA) of the diagnostic code will also follow that module.

a) Turn the key start switch to the off position.
b) Number the controller modules for later identification.
c) Swap the controllers from the current valve and one of the other valves that is not reporting any errors.
d) Turn the key start switch to the on position.
e) Operate both implement valves.
f) Check for diagnostic codes.

Result

- The original diagnostic code is still reported.

  The valve controller is at fault.

  Replace the valve controller.

  See the hydraulics chapter in the service manual to properly program and set up the new controller.
- The source address (SA) of the diagnostic code changed to a different location.

  The original solenoid is at fault, and the temporary controller has detected the same error.

  Replace the proportional solenoid.

  See the hydraulics chapter in the service manual to properly set up the old controller for its new solenoid.

g) **Important:** Make sure to return the swapped controllers back to their original location.

3. Check if the diagnostic code remains.

a) Inspect and clean the harness connector contacts.
b) Connect all the connectors.
c) Turn the battery disconnect switch to the on position.
d) Turn the key start switch to the on position.
e) Operate the machine at low idle.
f) Check if the diagnostic code remains.

Result

- SA 161 SPN 701 FMI 06 is not active.

  Stop.

- SA 161 SPN 701 FMI 06 is active.

  Failure of the auxiliary valve module is possible but not common. Exit the procedure and do the procedure again. If the diagnostic code remains active, replace the module.

  Stop.

10.9.7 Code SA 161 SPN 702 FMI 05

Implement valve 1 directional solenoid is disconnected.

Each implement valve has its own controller module, which operates the proportional and directional solenoids. Those solenoids are directly connected to the bottom of each control module. The likely cause for this error is a faulty solenoid.

Diagnosis and solution

1. Inspect the controller-to-solenoid connections.

a) Turn the key start switch to the off position.

b) Carefully release the controller from both solenoids.

Each solenoid has a connector retainer. Both must be released to lift the controller away from the solenoids.

c) Clean and inspect the contacts on the controller and both solenoids.

d) Reinstall the controller and all electrical connectors.

e) Turn the key start switch to the on position.

f) Operate the implement valve.

g) Check if the diagnostic code persists.

Result

- The diagnostic code is not active.

  Stop.
- The diagnostic code is active.

  Continue to step 2 to isolate the problem.

2. Temporarily swap adjacent controllers to isolate the problem.

Note that the function will follow the controller. In the cab, auxiliary control lever 1 will still control the original controller at its new location, and the source address (SA) of the diagnostic code will also follow that module.

a) Turn the key start switch to the off position.

b) Number the controller modules for later identification.

c) Swap the controllers from the current valve and one of the other valves that is not reporting any errors.

d) Turn the key start switch to the on position.

e) Operate both implement valves.

f) Check for diagnostic codes.

Result

- The original diagnostic code is still reported.

  The valve controller is at fault.

  Replace the valve controller.

  See the hydraulics chapter in the service manual to properly program and set up the new controller.

- The source address (SA) of the diagnostic code changed to a different location.

  The original solenoid is at fault, and the temporary controller has detected the same error.

  Replace the directional solenoid.

  See the hydraulics chapter in the service manual to properly set up the old controller for its new solenoid.

g) **Important:** Make sure to return the swapped controllers back to their original location.

3. Check if the diagnostic code remains.

a) Inspect and clean the harness connector contacts.
b) Connect all the connectors.
c) Turn the battery disconnect switch to the on position.
d) Turn the key start switch to the on position.
e) Operate the machine at low idle.
f) Check if the diagnostic code remains.

Result

- SA 161 SPN 702 FMI 05 is not active.

  Stop.
- SA 161 SPN 702 FMI 05 is active.

  Failure of the auxiliary valve module is possible but not common. Exit the procedure and do the procedure again. If the diagnostic code remains active, replace the module.

  Stop.

10.9.8 Code SA 161 SPN 702 FMI 06

Implement valve 1 directional solenoid has excessive current.

Each implement valve has its own controller module, which operates the proportional and directional solenoids. Those solenoids are directly connected to the bottom of each control module. The likely cause for this error is a faulty solenoid.

Diagnosis and solution

1. Inspect the controller-to-solenoid connections.

a) Turn the key start switch to the off position.
b) Carefully release the controller from both solenoids.

   Each solenoid has a connector retainer. Both must be released to lift the controller away from the solenoids.
c) Clean and inspect the contacts on the controller and both solenoids.
d) Reinstall the controller and all electrical connectors.
e) Turn the key start switch to the on position.
f) Operate the implement valve.
g) Check if the diagnostic code persists.

Result

- The diagnostic code is not active.

  Stop.
- The diagnostic code is active.

  Continue to step 2 to isolate the problem.

2. Temporarily swap adjacent controllers to isolate the problem.

Note that the function will follow the controller. In the cab, auxiliary control lever 1 will still control the original controller at its new location, and the source address (SA) of the diagnostic code will also follow that module.

a) Turn the key start switch to the off position.
b) Number the controller modules for later identification.
c) Swap the controllers from the current valve and one of the other valves that is not reporting any errors.
d) Turn the key start switch to the on position.
e) Operate both implement valves.
f) Check for diagnostic codes.

Result

- The original diagnostic code is still reported.

  The valve controller is at fault.

  Replace the valve controller.

  See the hydraulics chapter in the service manual to properly program and set up the new controller.
- The source address (SA) of the diagnostic code changed to a different location.

  The original solenoid is at fault, and the temporary controller has detected the same error.

  Replace the directional solenoid.

  See the hydraulics chapter in the service manual to properly set up the old controller for its new solenoid.

g) **Important**: Make sure to return the swapped controllers back to their original location.

3. Check if the diagnostic code remains.

a) Inspect and clean the harness connector contacts.
b) Connect all the connectors.
c) Turn the battery disconnect switch to the on position.
d) Turn the key start switch to the on position.
e) Operate the machine at low idle.
f) Check if the diagnostic code remains.

Result

- SA 161 SPN 702 FMI 06 is not active.

  Stop.
- SA 161 SPN 702 FMI 06 is active.

  Failure of the auxiliary valve module is possible but not common. Exit the procedure and do the procedure again. If the diagnostic code remains active, replace the module.

  Stop.

10.10 162 Auxiliary valve 2 module

10.10.1 Code SA 162 SPN 158 FMI 00

Implement valve module 2 is reporting over-voltage.

The Implement valve controller module is reporting over-voltage in its supplied power. All Implement valves share the same 12-volt power circuit. Unless this error is also reported for all other Implement valve controllers, the reporting controller is faulty.

Diagnosis and solution

1. Check the voltage at the auxiliary valve module.

a) Turn the key start switch to the on position but do not start the engine.

b) Check the voltage between contacts 2 and 3 at the valve module connector.

Result

- The voltage is above 12 Volts.

  Troubleshoot the charging system.
- The voltage is at or near 12 volts.

  Replace the valve module.

  See step 2 to validate the repair.

2. Check if the diagnostic code remains.

a) Check and clean the harness connector contacts.

b) Connect all the connectors.

c) Turn the battery disconnect switch to the on position.

d) Turn the key start switch to the on position.

e) Operate the machine at low idle.

f) Check if the diagnostic code remains.

Result

- SA 162 SPN 158 FMI 00 is not active.

  Stop.
- SA 162 SPN 158 FMI 00 is active.

  Replace the valve module.

  Stop.

10.10.1.1 Auxiliary valves electrical schematic

Auxiliary valve assembly

Item	Description
1	Controller
2	Proportional solenoid
3	Directional solenoid

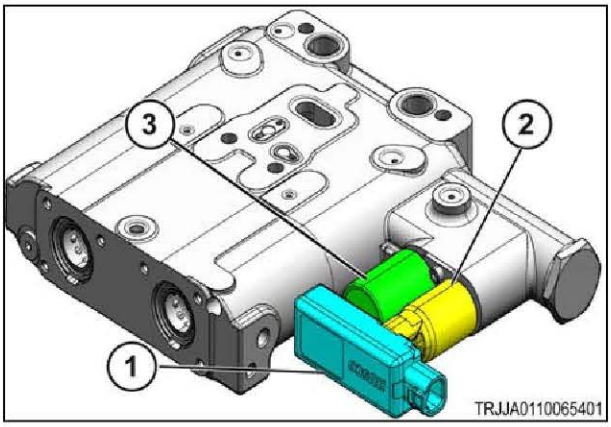

Fig. 633

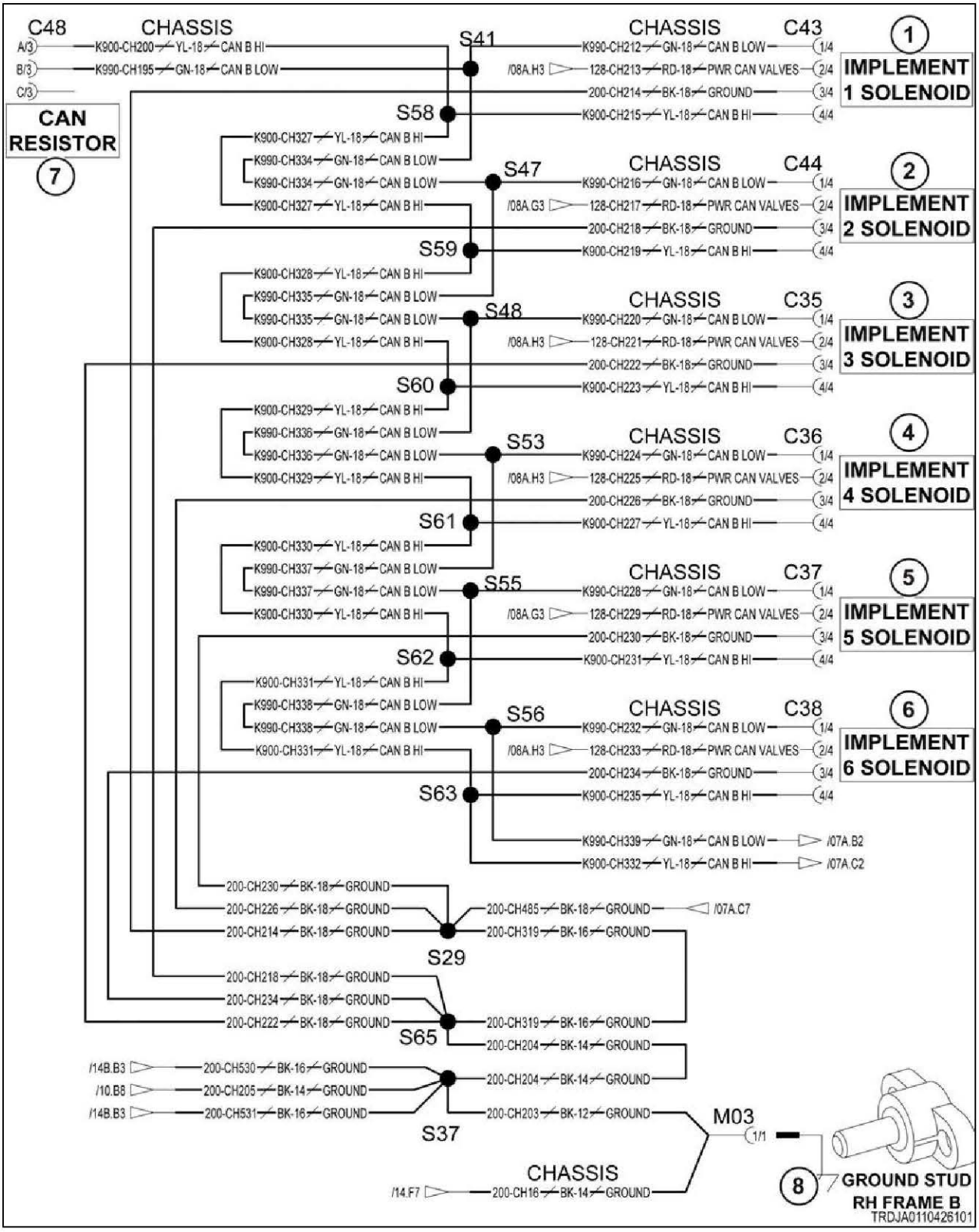
C48
CHASSIS
A/3
B/3
C/3
K900-CH200 YL-18 CAN B HI
K990-CH195 GN-18 CAN B LOW
CAN RESISTOR
7
S41
S58
S47
S59
S48
S60
S53
S61
S55
S62
S56
S63
S29
S65
S37
K900-CH327 YL-18 CAN B HI
K990-CH334 GN-18 CAN B LOW
K990-CH334 GN-18 CAN B LOW
K900-CH327 YL-18 CAN B HI
K900-CH328 YL-18 CAN B HI
K990-CH335 GN-18 CAN B LOW
K990-CH335 GN-18 CAN B LOW
K900-CH328 YL-18 CAN B HI
K900-CH329 YL-18 CAN B HI
K990-CH336 GN-18 CAN B LOW
K990-CH336 GN-18 CAN B LOW
K900-CH329 YL-18 CAN B HI
K900-CH330 YL-18 CAN B HI
K990-CH337 GN-18 CAN B LOW
K990-CH337 GN-18 CAN B LOW
K900-CH330 YL-18 CAN B HI
K900-CH331 YL-18 CAN B HI
K990-CH338 GN-18 CAN B LOW
K990-CH338 GN-18 CAN B LOW
K900-CH331 YL-18 CAN B HI
CHASSIS C43
K990-CH212 GN-18 CAN B LOW 1/4
/08A.H3 128-CH213 RD-18 PWR CAN VALVES 2/4
200-CH214 BK-18 GROUND 3/4
K900-CH215 YL-18 CAN B HI 4/4
1 IMPLEMENT 1 SOLENOID
CHASSIS C44
K990-CH216 GN-18 CAN B LOW 1/4
/08A.G3 128-CH217 RD-18 PWR CAN VALVES 2/4
200-CH218 BK-18 GROUND 3/4
K900-CH219 YL-18 CAN B HI 4/4
2 IMPLEMENT 2 SOLENOID
CHASSIS C35
K990-CH220 GN-18 CAN B LOW 1/4
/08A.H3 128-CH221 RD-18 PWR CAN VALVES 2/4
200-CH222 BK-18 GROUND 3/4
K900-CH223 YL-18 CAN B HI 4/4
3 IMPLEMENT 3 SOLENOID
CHASSIS C36
K990-CH224 GN-18 CAN B LOW 1/4
/08A.H3 128-CH225 RD-18 PWR CAN VALVES 2/4
200-CH226 BK-18 GROUND 3/4
K900-CH227 YL-18 CAN B HI 4/4
4 IMPLEMENT 4 SOLENOID
CHASSIS C37
K990-CH228 GN-18 CAN B LOW 1/4
/08A.G3 128-CH229 RD-18 PWR CAN VALVES 2/4
200-CH230 BK-18 GROUND 3/4
K900-CH231 YL-18 CAN B HI 4/4
5 IMPLEMENT 5 SOLENOID
CHASSIS C38
K990-CH232 GN-18 CAN B LOW 1/4
/08A.H3 128-CH233 RD-18 PWR CAN VALVES 2/4
200-CH234 BK-18 GROUND 3/4
K900-CH235 YL-18 CAN B HI 4/4
6 IMPLEMENT 6 SOLENOID
K990-CH339 GN-18 CAN B LOW /07A.B2
K900-CH332 YL-18 CAN B HI /07A.C2
200-CH230 BK-18 GROUND
200-CH226 BK-18 GROUND
200-CH214 BK-18 GROUND
200-CH485 BK-18 GROUND /07A.C7
200-CH319 BK-16 GROUND
200-CH218 BK-18 GROUND
200-CH234 BK-18 GROUND
200-CH222 BK-18 GROUND
200-CH319 BK-16 GROUND
200-CH204 BK-14 GROUND
/14B.B3 200-CH530 BK-16 GROUND
/10.B8 200-CH205 BK-14 GROUND
/14B.B3 200-CH531 BK-16 GROUND
200-CH204 BK-14 GROUND
200-CH203 BK-12 GROUND
M03
1/1
CHASSIS
/14.F7 200-CH16 BK-14 GROUND
8
GROUND STUD
RH FRAME B
TRDJA0110426101

Fig. 634

Schematic legend		
Item	**Schematic term**	**Description**
1	IMPLEMENT 1 SOLENOID	Implement 1 solenoid
2	IMPLEMENT 2 SOLENOID	Implement 2 solenoid
3	IMPLEMENT 3 SOLENOID	Implement 3 solenoid
4	IMPLEMENT 4 SOLENOID	Implement 4 solenoid
5	IMPLEMENT 5 SOLENOID	Implement 5 solenoid
6	IMPLEMENT 6 SOLENOID	Implement 6 solenoid
7	CAN RESISTOR	Controller area network (CAN) resistor
8	GROUND STUD RH FRAME B	Ground stud right-hand frame B
--	CAN B LOW	Controller area network (CAN) B low
--	CAN B HI	Controller area network (CAN) B high
--	PWR CAN VALVES	Power controller area network (CAN) valves
--	CAN + AUX	Controller area network (CAN) high auxiliary
--	CAN - AUX	Controller area network (CAN) low auxiliary

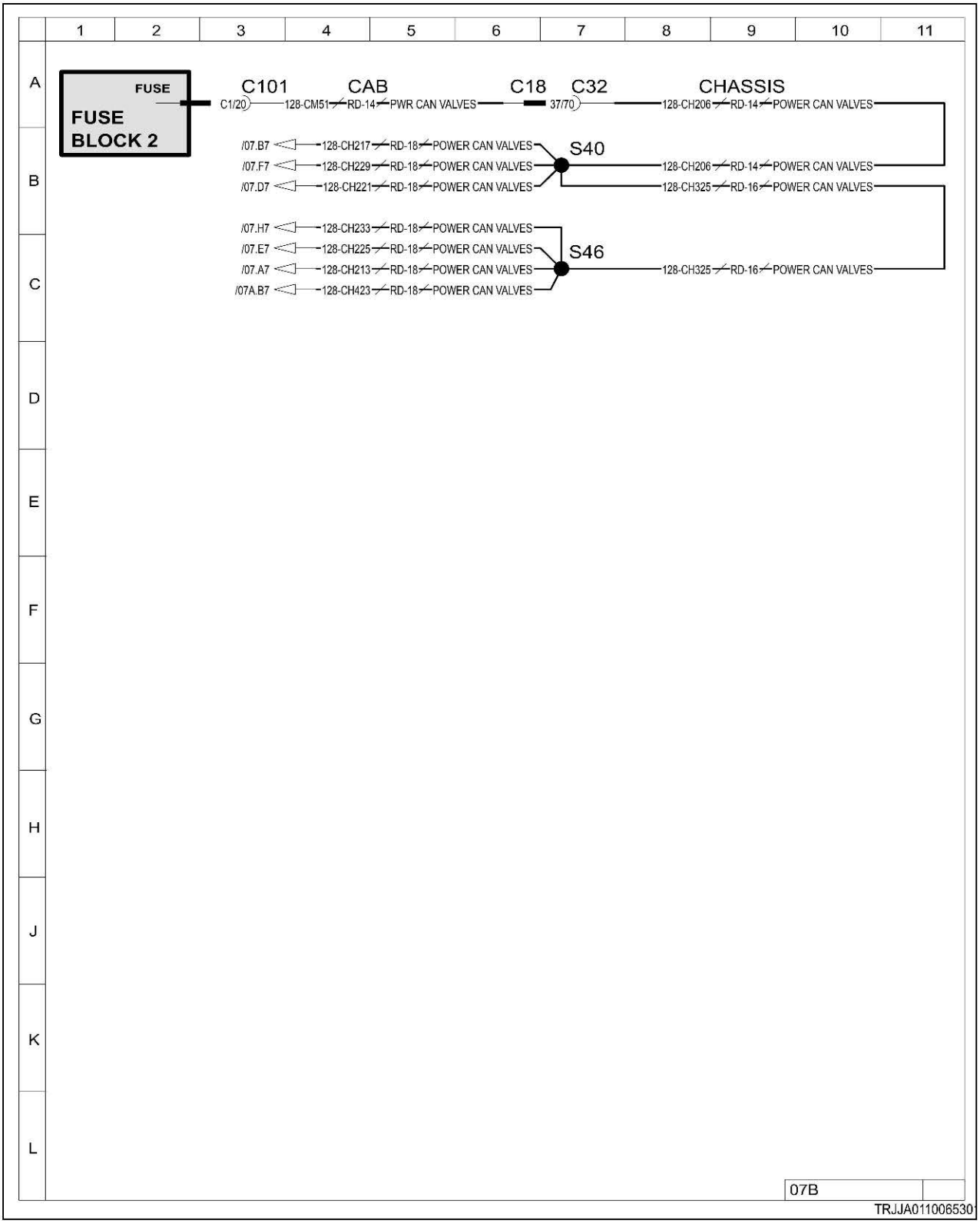

Fig. 635

10.10.2 Code SA 162 SPN 158 FMI 18

Implement valve module 2 is reporting under-voltage.

The implement valve controller module is reporting under-voltage in its supplied power. All implement valves share the same 12-volt power circuit. Unless this error is also reported for all other implement valve controllers, the fault likely lies at or near the reporting valve controller.

Diagnosis and solution

1. Check the voltage at the implement valve module.

a) Turn the key start switch to the on position but do not start the engine.

b) Check the voltage between contacts 2 and 3 at the valve module connector.

Result

- The voltage is at or near 12 volts.

  Replace the valve module.

  See step 3 to validate the repair.
- The voltage is below 12 Volts.

  Continue.

c) Check the voltage between contacts 2 and 3 of a nearby implement valve module connector, which is not reporting this same error.

Result

- All valves are reporting this same error.

  See step 2 to trace power and ground circuits.
- The voltage at this adjacent module is at or near 12 Volts.

  The fault in power is local to the valve module(s) that are reporting the error.

  Repair or replace the harness at the affected valve module(s).

  See step 3 to validate the repair.

2. Isolate the source of the voltage drop.

a) Check the voltage between fuse block 2, fuse 1 and chassis ground.

Result

- The voltage is below 12 volts.

  Inspect the fuse socket and fuse for corrosion.

  See step 3 to validate the repair.
- The voltage is at or near 12 Volts.

  Continue.

b) Check the voltage between contact 37 and chassis ground at the cab harness to chassis harness connector (C18 & C32).

Result

- The voltage is below 12 volts.

  Repair or replace the cab harness.

  See step 3 to validate the repair.
- The voltage is at or near 12 Volts.

  Repair or replace the chassis harness.

  See step 3 to validate the repair.

3. Check if the diagnostic code remains.

a) Inspect and clean the harness connector contacts.

b) Connect all the connectors.

c) Turn the battery disconnect switch to the on position.

d) Turn the key start switch to the on position.

e) Operate the machine at low idle.

f) Check if the diagnostic code remains.

Result

- SA 162 SPN 158 FMI 18 is not active.

  Stop.

- SA 162 SPN 158 FMI 18 is active. Go to f).

  If the diagnostic code remains active, replace the valve module.

  Stop.

10.10.2.1 Auxiliary valves electrical schematic

Auxiliary valve assembly

Item	Description
1	Controller
2	Proportional solenoid
3	Directional solenoid

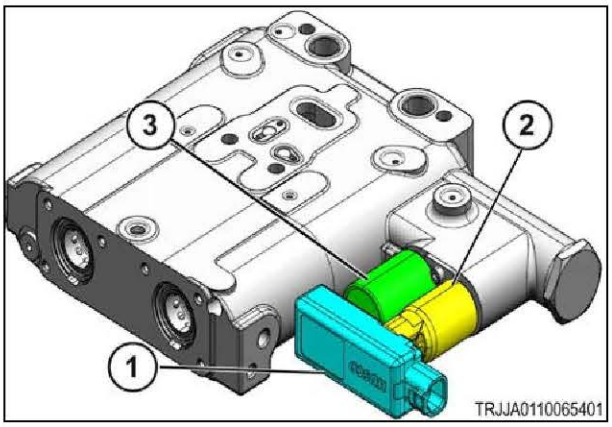

Fig. 636

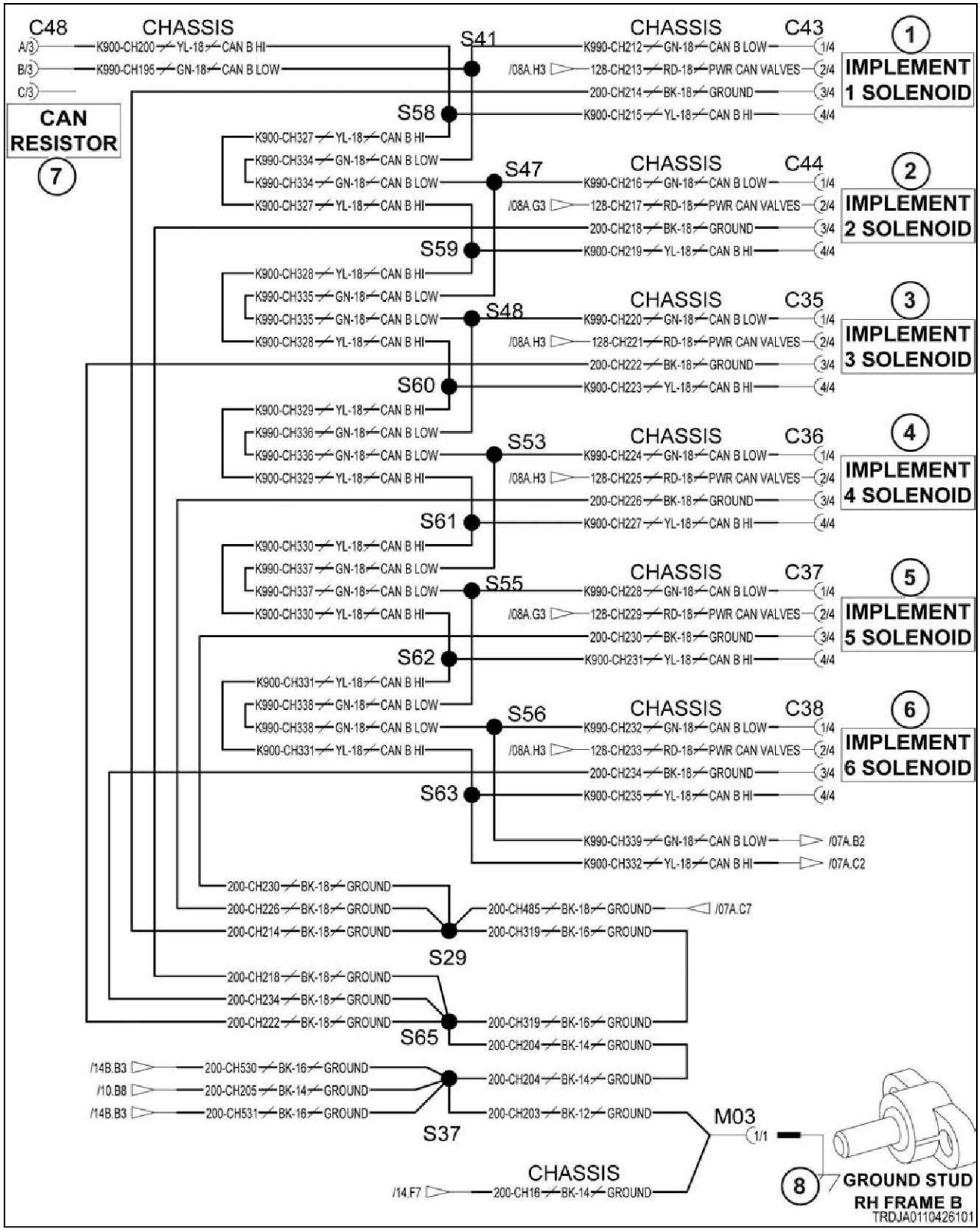
C48
CHASSIS
A/3
B/3
C/3
K900-CH200 YL-18 CAN B HI
K990-CH195 GN-18 CAN B LOW
CAN RESISTOR
7
S41
S58
S47
S59
S48
S60
S53
S61
S55
S62
S56
S63
CHASSIS C43
K990-CH212 GN-18 CAN B LOW 1/4
/08A.H3 128-CH213 RD-18 PWR CAN VALVES 2/4
200-CH214 BK-18 GROUND 3/4
K900-CH215 YL-18 CAN B HI 4/4
1 IMPLEMENT 1 SOLENOID
CHASSIS C44
K990-CH216 GN-18 CAN B LOW 1/4
/08A.G3 128-CH217 RD-18 PWR CAN VALVES 2/4
200-CH218 BK-18 GROUND 3/4
K900-CH219 YL-18 CAN B HI 4/4
2 IMPLEMENT 2 SOLENOID
CHASSIS C35
K990-CH220 GN-18 CAN B LOW 1/4
/08A.H3 128-CH221 RD-18 PWR CAN VALVES 2/4
200-CH222 BK-18 GROUND 3/4
K900-CH223 YL-18 CAN B HI 4/4
3 IMPLEMENT 3 SOLENOID
CHASSIS C36
K990-CH224 GN-18 CAN B LOW 1/4
/08A.H3 128-CH225 RD-18 PWR CAN VALVES 2/4
200-CH226 BK-18 GROUND 3/4
K900-CH227 YL-18 CAN B HI 4/4
4 IMPLEMENT 4 SOLENOID
CHASSIS C37
K990-CH228 GN-18 CAN B LOW 1/4
/08A.G3 128-CH229 RD-18 PWR CAN VALVES 2/4
200-CH230 BK-18 GROUND 3/4
K900-CH231 YL-18 CAN B HI 4/4
5 IMPLEMENT 5 SOLENOID
CHASSIS C38
K990-CH232 GN-18 CAN B LOW 1/4
/08A.H3 128-CH233 RD-18 PWR CAN VALVES 2/4
200-CH234 BK-18 GROUND 3/4
K900-CH235 YL-18 CAN B HI 4/4
6 IMPLEMENT 6 SOLENOID
K990-CH339 GN-18 CAN B LOW /07A.B2
K900-CH332 YL-18 CAN B HI /07A.C2
K900-CH327 YL-18 CAN B HI
K990-CH334 GN-18 CAN B LOW
K990-CH334 GN-18 CAN B LOW
K900-CH327 YL-18 CAN B HI
K900-CH328 YL-18 CAN B HI
K990-CH335 GN-18 CAN B LOW
K990-CH335 GN-18 CAN B LOW
K900-CH328 YL-18 CAN B HI
K900-CH329 YL-18 CAN B HI
K990-CH336 GN-18 CAN B LOW
K990-CH336 GN-18 CAN B LOW
K900-CH329 YL-18 CAN B HI
K900-CH330 YL-18 CAN B HI
K990-CH337 GN-18 CAN B LOW
K990-CH337 GN-18 CAN B LOW
K900-CH330 YL-18 CAN B HI
K900-CH331 YL-18 CAN B HI
K990-CH338 GN-18 CAN B LOW
K990-CH338 GN-18 CAN B LOW
K900-CH331 YL-18 CAN B HI
200-CH230 BK-18 GROUND
200-CH226 BK-18 GROUND
200-CH214 BK-18 GROUND
200-CH485 BK-18 GROUND /07A.C7
200-CH319 BK-16 GROUND
S29
200-CH218 BK-18 GROUND
200-CH234 BK-18 GROUND
200-CH222 BK-18 GROUND
200-CH319 BK-16 GROUND
S65
200-CH204 BK-14 GROUND
/14B.B3 200-CH530 BK-16 GROUND
/10.B8 200-CH205 BK-14 GROUND
/14B.B3 200-CH531 BK-16 GROUND
200-CH204 BK-14 GROUND
200-CH203 BK-12 GROUND
S37
M03
1/1
8
GROUND STUD RH FRAME B
CHASSIS
/14.F7 200-CH16 BK-14 GROUND
TRDJA0110426101

Fig. 637

Schematic legend		
Item	**Schematic term**	**Description**
1	IMPLEMENT 1 SOLENOID	Implement 1 solenoid
2	IMPLEMENT 2 SOLENOID	Implement 2 solenoid
3	IMPLEMENT 3 SOLENOID	Implement 3 solenoid
4	IMPLEMENT 4 SOLENOID	Implement 4 solenoid
5	IMPLEMENT 5 SOLENOID	Implement 5 solenoid
6	IMPLEMENT 6 SOLENOID	Implement 6 solenoid
7	CAN RESISTOR	Controller area network (CAN) resistor
8	GROUND STUD RH FRAME B	Ground stud right-hand frame B
--	CAN B LOW	Controller area network (CAN) B low
--	CAN B HI	Controller area network (CAN) B high
--	PWR CAN VALVES	Power controller area network (CAN) valves
--	CAN + AUX	Controller area network (CAN) high auxiliary
--	CAN - AUX	Controller area network (CAN) low auxiliary

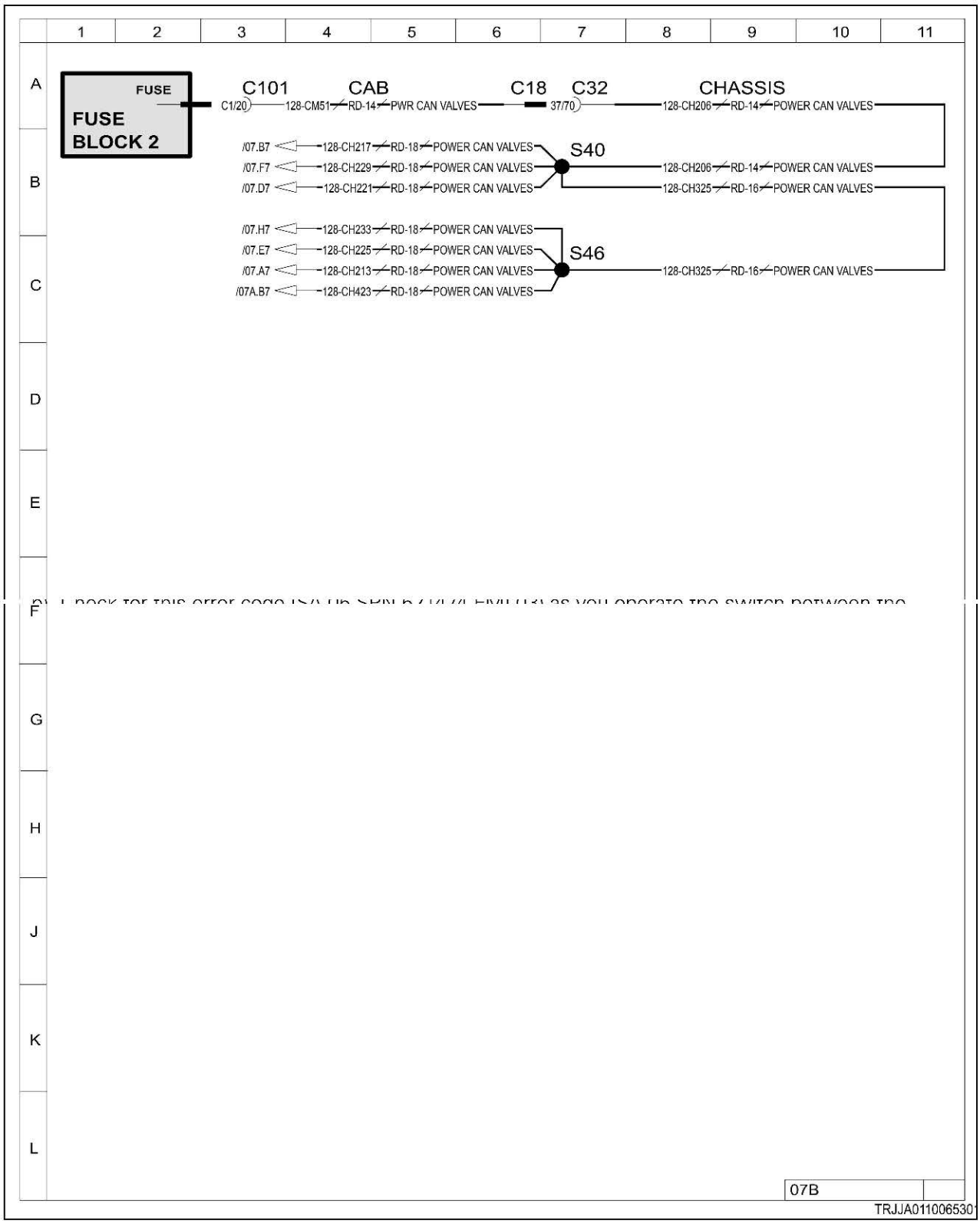

Fig. 638

10.10.3 Code SA 162 SPN 628 FMI 12

Implement valve 2 program memory - malfunction.

Each implement valve has its own controller module, which operates the proportional and directional solenoids. Those solenoids are directly connected to the bottom of each control module. The likely cause for this error is a faulty valve control module.

Diagnosis and solution

1. Reset the module.

a) Turn the key start switch to the off position.
b) Wait 60 seconds.
c) Turn the key start switch to the on position.
d) Check for the fault code.

Result

- The fault code is not active.

  Stop.
- The fault code is active.

  Replace the valve controller.

  See the hydraulics chapter in the service manual to properly program and set up the new controller.

2. Check if the fault code remains.

a) Inspect and clean the harness connector contacts.
b) Connect all the connectors.
c) Turn the battery disconnect switch to the on position.
d) Turn the key start switch to the on position.
e) Operate the machine at low idle.
f) Check for the fault code.

Result

- The fault code is not active.

  Stop.
- The fault code is active.

  Exit the procedure and do the procedure again.

  Stop.

10.10.3.1 CAN 2 electrical schematic

Auxiliary valve assembly

Item	Description
1	Controller
2	Proportional solenoid
3	Directional solenoid

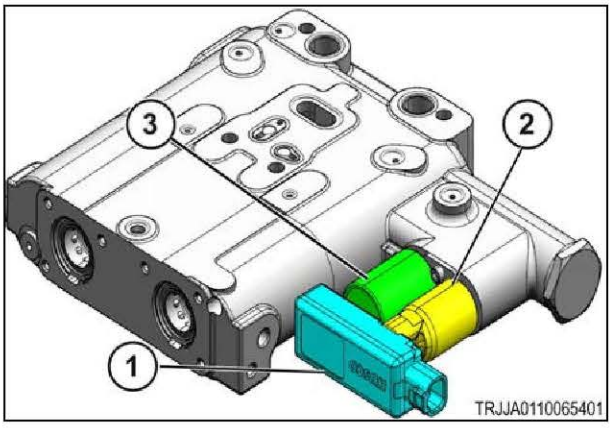

Fig. 639

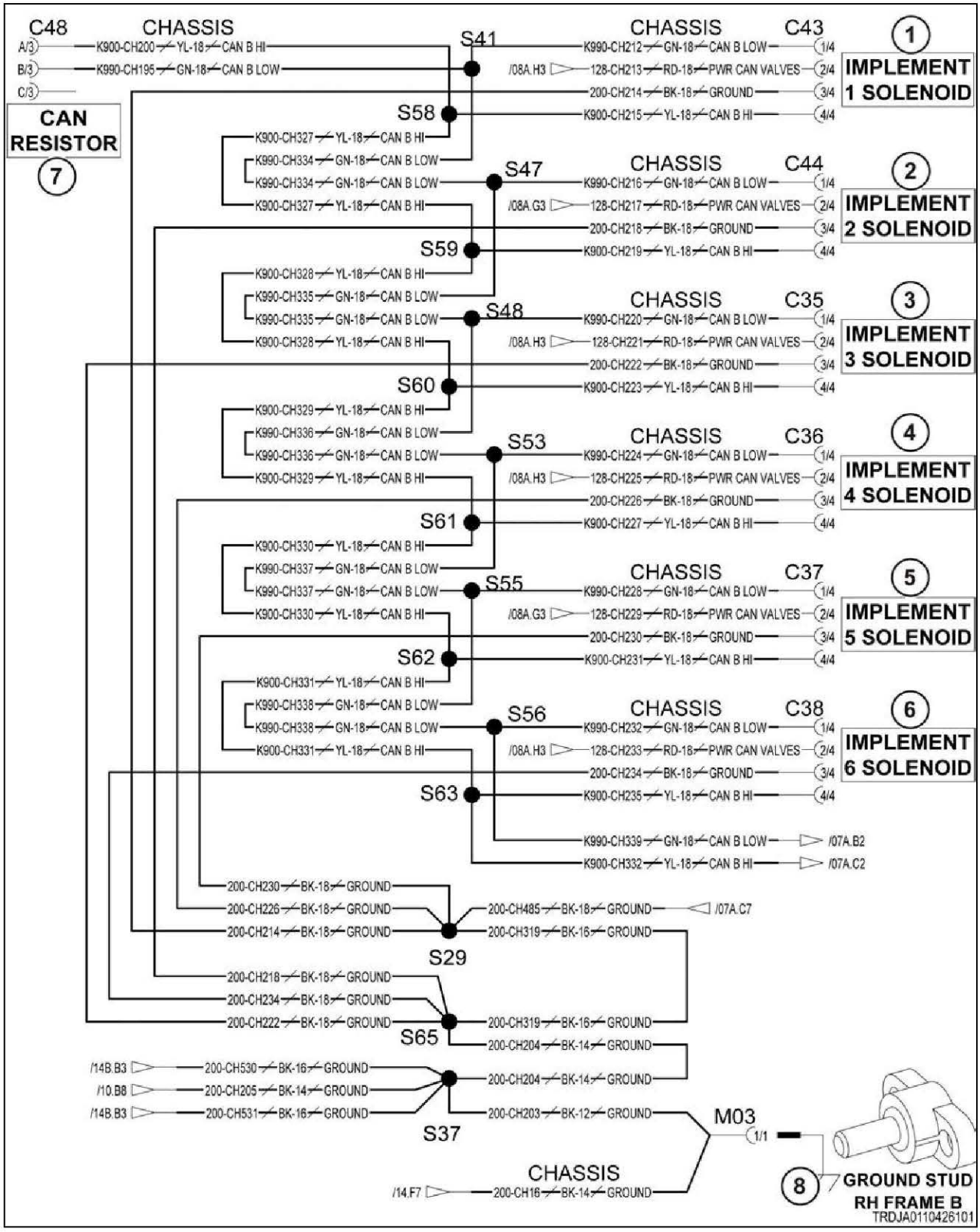
C48
CHASSIS
A/3
B/3
C/3
K900-CH200 YL-18 CAN B HI
K990-CH195 GN-18 CAN B LOW
CAN RESISTOR
7
S41
S58
S47
S59
S48
S60
S53
S61
S55
S62
S56
S63
S29
S65
S37
CHASSIS C43
K990-CH212 GN-18 CAN B LOW 1/4
/08A.H3 128-CH213 RD-18 PWR CAN VALVES 2/4
200-CH214 BK-18 GROUND 3/4
K900-CH215 YL-18 CAN B HI 4/4
1 IMPLEMENT 1 SOLENOID
CHASSIS C44
K990-CH216 GN-18 CAN B LOW 1/4
/08A.G3 128-CH217 RD-18 PWR CAN VALVES 2/4
200-CH218 BK-18 GROUND 3/4
K900-CH219 YL-18 CAN B HI 4/4
2 IMPLEMENT 2 SOLENOID
CHASSIS C35
K990-CH220 GN-18 CAN B LOW 1/4
/08A.H3 128-CH221 RD-18 PWR CAN VALVES 2/4
200-CH222 BK-18 GROUND 3/4
K900-CH223 YL-18 CAN B HI 4/4
3 IMPLEMENT 3 SOLENOID
CHASSIS C36
K990-CH224 GN-18 CAN B LOW 1/4
/08A.H3 128-CH225 RD-18 PWR CAN VALVES 2/4
200-CH226 BK-18 GROUND 3/4
K900-CH227 YL-18 CAN B HI 4/4
4 IMPLEMENT 4 SOLENOID
CHASSIS C37
K990-CH228 GN-18 CAN B LOW 1/4
/08A.G3 128-CH229 RD-18 PWR CAN VALVES 2/4
200-CH230 BK-18 GROUND 3/4
K900-CH231 YL-18 CAN B HI 4/4
5 IMPLEMENT 5 SOLENOID
CHASSIS C38
K990-CH232 GN-18 CAN B LOW 1/4
/08A.H3 128-CH233 RD-18 PWR CAN VALVES 2/4
200-CH234 BK-18 GROUND 3/4
K900-CH235 YL-18 CAN B HI 4/4
6 IMPLEMENT 6 SOLENOID
K990-CH339 GN-18 CAN B LOW /07A.B2
K900-CH332 YL-18 CAN B HI /07A.C2
K900-CH327 YL-18 CAN B HI
K990-CH334 GN-18 CAN B LOW
K990-CH334 GN-18 CAN B LOW
K900-CH327 YL-18 CAN B HI
K900-CH328 YL-18 CAN B HI
K990-CH335 GN-18 CAN B LOW
K990-CH335 GN-18 CAN B LOW
K900-CH328 YL-18 CAN B HI
K900-CH329 YL-18 CAN B HI
K990-CH336 GN-18 CAN B LOW
K990-CH336 GN-18 CAN B LOW
K900-CH329 YL-18 CAN B HI
K900-CH330 YL-18 CAN B HI
K990-CH337 GN-18 CAN B LOW
K990-CH337 GN-18 CAN B LOW
K900-CH330 YL-18 CAN B HI
K900-CH331 YL-18 CAN B HI
K990-CH338 GN-18 CAN B LOW
K990-CH338 GN-18 CAN B LOW
K900-CH331 YL-18 CAN B HI
200-CH230 BK-18 GROUND
200-CH226 BK-18 GROUND
200-CH214 BK-18 GROUND
200-CH485 BK-18 GROUND /07A.C7
200-CH319 BK-16 GROUND
200-CH218 BK-18 GROUND
200-CH234 BK-18 GROUND
200-CH222 BK-18 GROUND
200-CH319 BK-16 GROUND
200-CH204 BK-14 GROUND
/14B.B3 200-CH530 BK-16 GROUND
/10.B8 200-CH205 BK-14 GROUND
/14B.B3 200-CH531 BK-16 GROUND
200-CH204 BK-14 GROUND
200-CH203 BK-12 GROUND
M03
1/1
8
GROUND STUD RH FRAME B
CHASSIS
/14.F7 200-CH16 BK-14 GROUND
TRDJA0110426101

Fig. 640

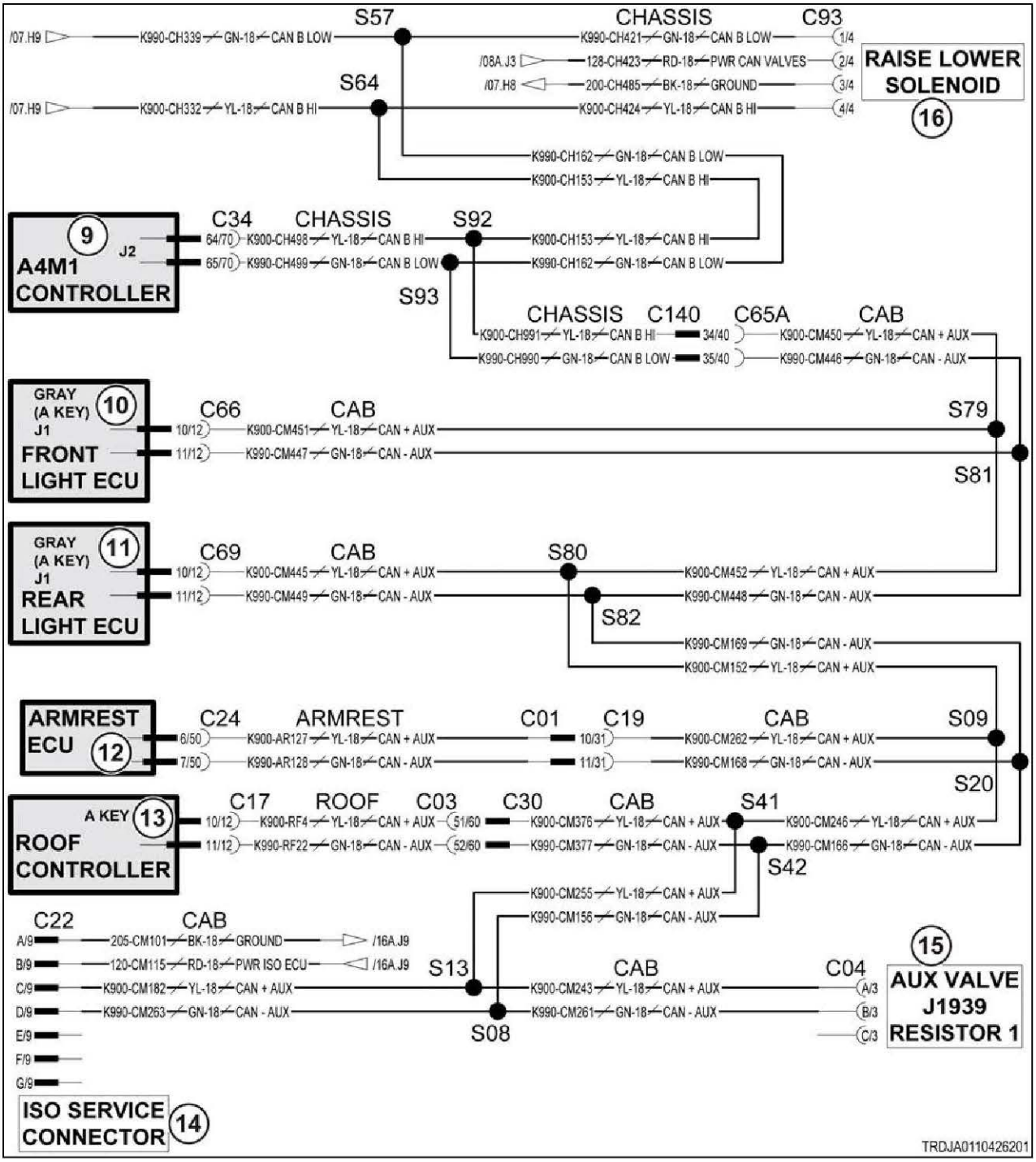

Fig. 641

Schematic legend		
Item	**Schematic term**	**Description**
1	IMPLEMENT 1 SOLENOID	Implement 1 solenoid
2	IMPLEMENT 2 SOLENOID	Implement 2 solenoid
3	IMPLEMENT 3 SOLENOID	Implement 3 solenoid
4	IMPLEMENT 4 SOLENOID	Implement 4 solenoid
5	IMPLEMENT 5 SOLENOID	Implement 5 solenoid
6	IMPLEMENT 6 SOLENOID	Implement 6 solenoid

Schematic legend		
Item	Schematic term	Description
7	CAN RESISTOR	Controller area network (CAN) terminator
8	GROUND STUD RH FRAME B	Ground stud right-hand frame B
9	A4M1 CONTROLLER	Transmission module
10	FRONT LIGHT ECU	Front lighting module
11	REAR LIGHT ECU	Rear lighting module
12	ARMREST ECU	Armrest module
13	ROOF CONTROLLER	Roof module
14	ISO SERVICE CONNECTOR	ISO service connector
15	AUX VALVE J1939 RESISTOR 1	Controller area network (CAN) terminator
16	RAISE LOWER SOLENOID	Raise/lower solenoid
--	CAN B LOW	Controller area network (CAN) B low
--	CAN B HI	Controller area network (CAN) B high
--	PWR CAN VALVES	Power controller area network (CAN) valves
--	CAN + AUX	Controller area network (CAN) high auxiliary
--	CAN - AUX	Controller area network (CAN) low auxiliary

10.10.4 Code SA 162 SPN 639 FMI 19

The Controller Area Network (CAN) is not communicating correctly. The conditions defined by the software were not met.

Diagnosis and solution

1. Make sure the part numbers are correct

- Auxiliary valve 2 module software part number
- Auxiliary valve 2 module part number

Result

Expected result - all part numbers are correct.

Results:

- Yes - all part numbers are correct.

  see step 2, page 10-1087
- No - one or more part number is not correct.

  Install the correct module and flash the correct software.

  see step 3, page 10-1088

2. Inspect the harness connections.

a) Turn the key start switch to the off position.
b) Turn the battery disconnect switch to the off position.
c) Remove the key from the battery disconnect switch.
d) Inspect all harness connections.

Result

Expected result - harness connections are good.

Results:

- Yes - harness connections are good.

  see step 3, page 10-1088
- No - harness connections are not good.

  Repair or replace the harness.

  see step 3, page 10-1088

3. Check for other diagnostic codes for this module.

a) Turn the key start switch to the off position.
b) Turn the battery disconnect switch to the off position.
c) Remove the key from the battery disconnect switch.
d) Connect the module using the controller area network (CAN) data link.
e) Turn the battery disconnect switch to the on position.
f) Turn the key start switch to the on position.
g) Check for active diagnostic codes for this module.

Result

Expected result - no diagnostic codes are active for this module.

Results:

- Yes - no diagnostic codes are active.

  Stop.
- No - diagnostic codes are active for this module.

  Failure of this module is possible but not common. Exit the procedure and troubleshoot the active codes. If the diagnostic code remains active, replace the module.

  Stop.

10.10.5 Code SA 162 SPN 701 FMI 05

Implement valve 2 proportional solenoid is disconnected.

Each implement valve has its own controller module, which operates the proportional and directional solenoids. Those solenoids are directly connected to the bottom of each control module. The likely cause for this error is a faulty solenoid.

Diagnosis and solution

1. Inspect the controller-to-solenoid connections.

a) Turn the key start switch to the off position.
b) Carefully release the controller from both solenoids.

   Each solenoid has a connector retainer. Both must be released to lift the controller away from the solenoids.
c) Clean and inspect the contacts on the controller and both solenoids.
d) Reinstall the controller and all electrical connectors.
e) Turn the key start switch to the on position.
f) Operate the implement valve.
g) Check if the diagnostic code persists.

Result

- The diagnostic code is not active.

  Stop.
- The diagnostic code is active.

  Continue to step 2 to isolate the problem.

2. Temporarily swap adjacent controllers to isolate the problem.

Note that the function will follow the controller. In the cab, auxiliary control lever 2 will still control the original controller at its new location, and the source address (SA) of the diagnostic code will also follow that module.

a) Turn the key start switch to the off position.
b) Number the controller modules for later identification.
c) Swap the controllers from the current valve and one of the other valves that is not reporting any errors.
d) Turn the key start switch to the on position.
e) Operate both implement valves.
f) Check for diagnostic codes.

Result

- The original diagnostic code is still reported.

  The valve controller is at fault.

  Replace the valve controller.

  See the hydraulics chapter in the service manual to properly program and set up the new controller.
- The source address (SA) of the diagnostic code changed to a different location.

  The original solenoid is at fault, and the temporary controller has detected the same error.

  Replace the proportional solenoid.

  See the hydraulics chapter in the service manual to properly set up the old controller for its new solenoid.

g) **Important**: Make sure to return the swapped controllers back to their original location.

3. Check if the diagnostic code remains.
a) Inspect and clean the harness connector contacts.
b) Connect all the connectors.
c) Turn the battery disconnect switch to the on position.
d) Turn the key start switch to the on position.
e) Operate the machine at low idle.
f) Check if the diagnostic code remains.

Result

- SA 162 SPN 701 FMI 05 is not active.

  Stop.
- SA 162 SPN 701 FMI 05 is active.

  Failure of the auxiliary valve module is possible but not common. Exit the procedure and do the procedure again. If the diagnostic code remains active, replace the module.

  Stop.

10.10.6 Code SA 162 SPN 701 FMI 06

Implement valve 2 proportional solenoid has excessive current.

Each implement valve has its own controller module, which operates the proportional and directional solenoids. Those solenoids are directly connected to the bottom of each control module. The likely cause for this error is a faulty solenoid.

Diagnosis and solution

1. Inspect the controller-to-solenoid connections.
a) Turn the key start switch to the off position.
b) Carefully release the controller from both solenoids.

Each solenoid has a connector retainer. Both must be released to lift the controller away from the solenoids.

c) Clean and inspect the contacts on the controller and both solenoids.
d) Reinstall the controller and all electrical connectors.
e) Turn the key start switch to the on position.
f) Operate the implement valve.
g) Check if the diagnostic code persists.

Result

- The diagnostic code is not active.

  Stop.
- The diagnostic code is active.

  Continue to step 2 to isolate the problem.

2. Temporarily swap adjacent controllers to isolate the problem.

Note that the function will follow the controller. In the cab, auxiliary control lever 2 will still control the original controller at its new location, and the source address (SA) of the diagnostic code will also follow that module.

a) Turn the key start switch to the off position.
b) Number the controller modules for later identification.
c) Swap the controllers from the current valve and one of the other valves that is not reporting any errors.
d) Turn the key start switch to the on position.
e) Operate both implement valves.
f) Check for diagnostic codes.

Result

- The original diagnostic code is still reported.

  The valve controller is at fault.

  Replace the valve controller.

  See the hydraulics chapter in the service manual to properly program and set up the new controller.
- The source address (SA) of the diagnostic code changed to a different location.

  The original solenoid is at fault, and the temporary controller has detected the same error.

  Replace the proportional solenoid.

  See the hydraulics chapter in the service manual to properly set up the old controller for its new solenoid.

g) **Important:** Make sure to return the swapped controllers back to their original location.

3. Check if the diagnostic code remains.

a) Inspect and clean the harness connector contacts.
b) Connect all the connectors.
c) Turn the battery disconnect switch to the on position.
d) Turn the key start switch to the on position.
e) Operate the machine at low idle.
f) Check if the diagnostic code remains.

Result

- SA 162 SPN 701 FMI 06 is not active.

  Stop.

- SA 162 SPN 701 FMI 06 is active.

  Failure of the auxiliary valve module is possible but not common. Exit the procedure and do the procedure again. If the diagnostic code remains active, replace the module.

  Stop.

10.10.7 Code SA 162 SPN 702 FMI 05

Implement valve 2 directional solenoid is disconnected.

Each implement valve has its own controller module, which operates the proportional and directional solenoids. Those solenoids are directly connected to the bottom of each control module. The likely cause for this error is a faulty solenoid.

Diagnosis and solution

1. Inspect the controller-to-solenoid connections.
   a) Turn the key start switch to the off position.
   b) Carefully release the controller from both solenoids.

      Each solenoid has a connector retainer. Both must be released to lift the controller away from the solenoids.
   c) Clean and inspect the contacts on the controller and both solenoids.
   d) Reinstall the controller and all electrical connectors.
   e) Turn the key start switch to the on position.
   f) Operate the implement valve.
   g) Check if the diagnostic code persists.

   Result

   - The diagnostic code is not active.

     Stop.
   - The diagnostic code is active.

     Continue to step 2 to isolate the problem.

2. Temporarily swap adjacent controllers to isolate the problem.

   Note that the function will follow the controller. In the cab, auxiliary control lever 2 will still control the original controller at its new location, and the source address (SA) of the diagnostic code will also follow that module.
   a) Turn the key start switch to the off position.
   b) Number the controller modules for later identification.
   c) Swap the controllers from the current valve and one of the other valves that is not reporting any errors.
   d) Turn the key start switch to the on position.
   e) Operate both implement valves.
   f) Check for diagnostic codes.

   Result

   - The original diagnostic code is still reported.

     The valve controller is at fault.

     Replace the valve controller.

     See the hydraulics chapter in the service manual to properly program and set up the new controller.

- The source address (SA) of the diagnostic code changed to a different location.

  The original solenoid is at fault, and the temporary controller has detected the same error.

  Replace the directional solenoid.

  See the hydraulics chapter in the service manual to properly set up the old controller for its new solenoid.

g) **Important:** Make sure to return the swapped controllers back to their original location.

3. Check if the diagnostic code remains.

a) Inspect and clean the harness connector contacts.
b) Connect all the connectors.
c) Turn the battery disconnect switch to the on position.
d) Turn the key start switch to the on position.
e) Operate the machine at low idle.
f) Check if the diagnostic code remains.

Result

- SA 162 SPN 702 FMI 05 is not active.

  Stop.
- SA 162 SPN 702 FMI 05 is active.

  Failure of the auxiliary valve module is possible but not common. Exit the procedure and do the procedure again. If the diagnostic code remains active, replace the module.

  Stop.

10.10.8 Code SA 162 SPN 702 FMI 06

Implement valve 2 directional solenoid has excessive current.

Each implement valve has its own controller module, which operates the proportional and directional solenoids. Those solenoids are directly connected to the bottom of each control module. The likely cause for this error is a faulty solenoid.

Diagnosis and solution

1. Inspect the controller-to-solenoid connections.

a) Turn the key start switch to the off position.
b) Carefully release the controller from both solenoids.

   Each solenoid has a connector retainer. Both must be released to lift the controller away from the solenoids.
c) Clean and inspect the contacts on the controller and both solenoids.
d) Reinstall the controller and all electrical connectors.
e) Turn the key start switch to the on position.
f) Operate the implement valve.
g) Check if the diagnostic code persists.

Result

- The diagnostic code is not active.

  Stop.
- The diagnostic code is active.

  Continue to step 2 to isolate the problem.

2. Temporarily swap adjacent controllers to isolate the problem.

Note that the function will follow the controller. In the cab, auxiliary control lever 2 will still control the original controller at its new location, and the source address (SA) of the diagnostic code will also follow that module.

a) Turn the key start switch to the off position.
b) Number the controller modules for later identification.
c) Swap the controllers from the current valve and one of the other valves that is not reporting any errors.
d) Turn the key start switch to the on position.
e) Operate both implement valves.
f) Check for diagnostic codes.

Result

- The original diagnostic code is still reported.

  The valve controller is at fault.

  Replace the valve controller.

  See the hydraulics chapter in the service manual to properly program and set up the new controller.
- The source address (SA) of the diagnostic code changed to a different location.

  The original solenoid is at fault, and the temporary controller has detected the same error.

  Replace the directional solenoid.

  See the hydraulics chapter in the service manual to properly set up the old controller for its new solenoid.

g) **Important**: Make sure to return the swapped controllers back to their original location.

3. Check if the diagnostic code remains.

a) Inspect and clean the harness connector contacts.
b) Connect all the connectors.
c) Turn the battery disconnect switch to the on position.
d) Turn the key start switch to the on position.
e) Operate the machine at low idle.
f) Check if the diagnostic code remains.

Result

- SA 162 SPN 702 FMI 06 is not active.

  Stop.
- SA 162 SPN 702 FMI 06 is active.

  Failure of the auxiliary valve module is possible but not common. Exit the procedure and do the procedure again. If the diagnostic code remains active, replace the module.

  Stop.

10.11 163 Auxiliary valve 3 module

10.11.1 Code SA 163 SPN 158 FMI 00

Implement valve module 3 is reporting over-voltage.

The Implement valve controller module is reporting over-voltage in its supplied power. All Implement valves share the same 12-volt power circuit. Unless this error is also reported for all other Implement valve controllers, the reporting controller is faulty.

Diagnosis and solution

1. Check the voltage at the auxiliary valve module.

a) Turn the key start switch to the on position but do not start the engine.

b) Check the voltage between contacts 2 and 3 at the valve module connector.

Result

- The voltage is above 12 Volts.

  Troubleshoot the charging system.
- The voltage is at or near 12 volts.

  Replace the valve module.

  See step 2 to validate the repair.

2. Check if the diagnostic code remains.

a) Check and clean the harness connector contacts.

b) Connect all the connectors.

c) Turn the battery disconnect switch to the on position.

d) Turn the key start switch to the on position.

e) Operate the machine at low idle.

f) Check if the diagnostic code remains.

Result

- SA 163 SPN 158 FMI 00 is not active.

  Stop.
- SA 163 SPN 158 FMI 00 is active.

  Replace the valve module.

  Stop.

10.11.1.1 Auxiliary valves electrical schematic

Auxiliary valve assembly

Item	Description
1	Controller
2	Proportional solenoid
3	Directional solenoid

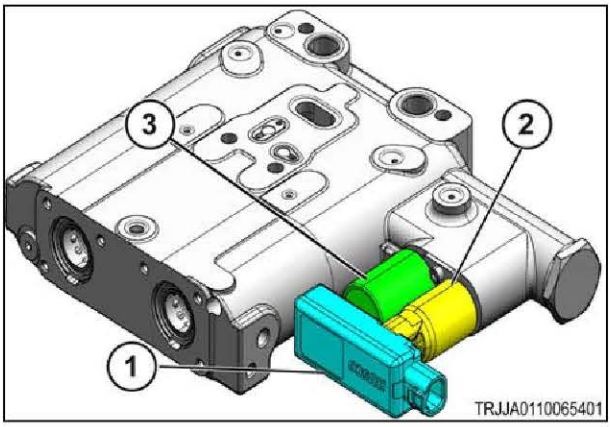

Fig. 642

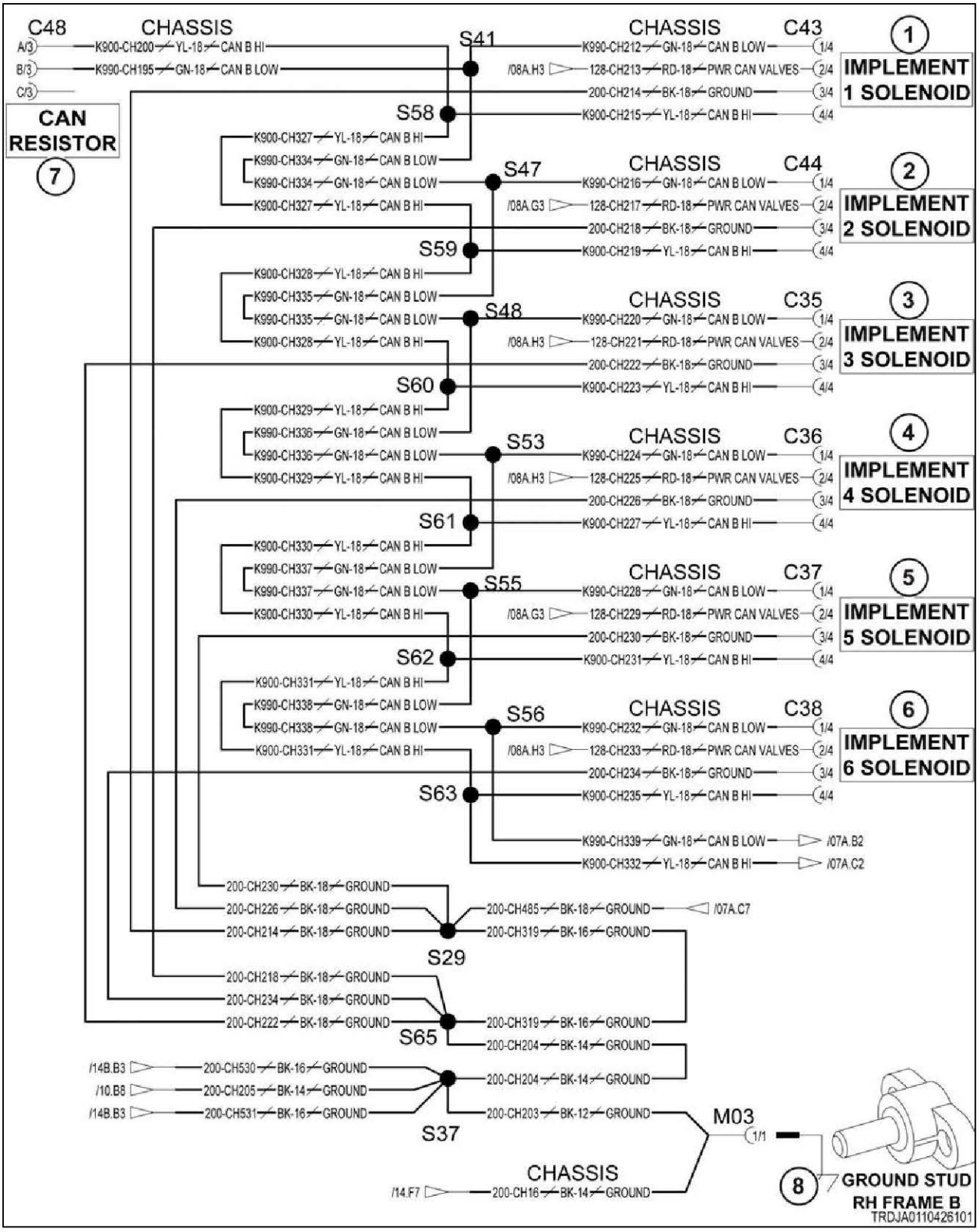
C48
CHASSIS
A/3
B/3
C/3
K900-CH200 YL-18 CAN B HI
K990-CH195 GN-18 CAN B LOW
CAN RESISTOR
7
S41
S58
S47
S59
S48
S60
S53
S61
S55
S62
S56
S63
S29
S65
S37
K900-CH327 YL-18 CAN B HI
K990-CH334 GN-18 CAN B LOW
K990-CH334 GN-18 CAN B LOW
K900-CH327 YL-18 CAN B HI
K900-CH328 YL-18 CAN B HI
K990-CH335 GN-18 CAN B LOW
K990-CH335 GN-18 CAN B LOW
K900-CH328 YL-18 CAN B HI
K900-CH329 YL-18 CAN B HI
K990-CH336 GN-18 CAN B LOW
K990-CH336 GN-18 CAN B LOW
K900-CH329 YL-18 CAN B HI
K900-CH330 YL-18 CAN B HI
K990-CH337 GN-18 CAN B LOW
K990-CH337 GN-18 CAN B LOW
K900-CH330 YL-18 CAN B HI
K900-CH331 YL-18 CAN B HI
K990-CH338 GN-18 CAN B LOW
K990-CH338 GN-18 CAN B LOW
K900-CH331 YL-18 CAN B HI
CHASSIS C43
K990-CH212 GN-18 CAN B LOW 1/4
/08A.H3 128-CH213 RD-18 PWR CAN VALVES 2/4
200-CH214 BK-18 GROUND 3/4
K900-CH215 YL-18 CAN B HI 4/4
1 IMPLEMENT 1 SOLENOID
CHASSIS C44
K990-CH216 GN-18 CAN B LOW 1/4
/08A.G3 128-CH217 RD-18 PWR CAN VALVES 2/4
200-CH218 BK-18 GROUND 3/4
K900-CH219 YL-18 CAN B HI 4/4
2 IMPLEMENT 2 SOLENOID
CHASSIS C35
K990-CH220 GN-18 CAN B LOW 1/4
/08A.H3 128-CH221 RD-18 PWR CAN VALVES 2/4
200-CH222 BK-18 GROUND 3/4
K900-CH223 YL-18 CAN B HI 4/4
3 IMPLEMENT 3 SOLENOID
CHASSIS C36
K990-CH224 GN-18 CAN B LOW 1/4
/08A.H3 128-CH225 RD-18 PWR CAN VALVES 2/4
200-CH226 BK-18 GROUND 3/4
K900-CH227 YL-18 CAN B HI 4/4
4 IMPLEMENT 4 SOLENOID
CHASSIS C37
K990-CH228 GN-18 CAN B LOW 1/4
/08A.G3 128-CH229 RD-18 PWR CAN VALVES 2/4
200-CH230 BK-18 GROUND 3/4
K900-CH231 YL-18 CAN B HI 4/4
5 IMPLEMENT 5 SOLENOID
CHASSIS C38
K990-CH232 GN-18 CAN B LOW 1/4
/08A.H3 128-CH233 RD-18 PWR CAN VALVES 2/4
200-CH234 BK-18 GROUND 3/4
K900-CH235 YL-18 CAN B HI 4/4
6 IMPLEMENT 6 SOLENOID
K990-CH339 GN-18 CAN B LOW /07A.B2
K900-CH332 YL-18 CAN B HI /07A.C2
200-CH230 BK-18 GROUND
200-CH226 BK-18 GROUND
200-CH214 BK-18 GROUND
200-CH485 BK-18 GROUND /07A.C7
200-CH319 BK-16 GROUND
200-CH218 BK-18 GROUND
200-CH234 BK-18 GROUND
200-CH222 BK-18 GROUND
200-CH319 BK-16 GROUND
200-CH204 BK-14 GROUND
/14B.B3 200-CH530 BK-16 GROUND
/10.B8 200-CH205 BK-14 GROUND
/14B.B3 200-CH531 BK-16 GROUND
200-CH204 BK-14 GROUND
200-CH203 BK-12 GROUND
M03
1/1
CHASSIS
/14.F7 200-CH16 BK-14 GROUND
8
GROUND STUD
RH FRAME B
TRDJA0110426101

Fig. 643

Schematic legend		
Item	**Schematic term**	**Description**
1	IMPLEMENT 1 SOLENOID	Implement 1 solenoid
2	IMPLEMENT 2 SOLENOID	Implement 2 solenoid
3	IMPLEMENT 3 SOLENOID	Implement 3 solenoid
4	IMPLEMENT 4 SOLENOID	Implement 4 solenoid
5	IMPLEMENT 5 SOLENOID	Implement 5 solenoid
6	IMPLEMENT 6 SOLENOID	Implement 6 solenoid
7	CAN RESISTOR	Controller area network (CAN) resistor
8	GROUND STUD RH FRAME B	Ground stud right-hand frame B
--	CAN B LOW	Controller area network (CAN) B low
--	CAN B HI	Controller area network (CAN) B high
--	PWR CAN VALVES	Power controller area network (CAN) valves
--	CAN + AUX	Controller area network (CAN) high auxiliary
--	CAN - AUX	Controller area network (CAN) low auxiliary

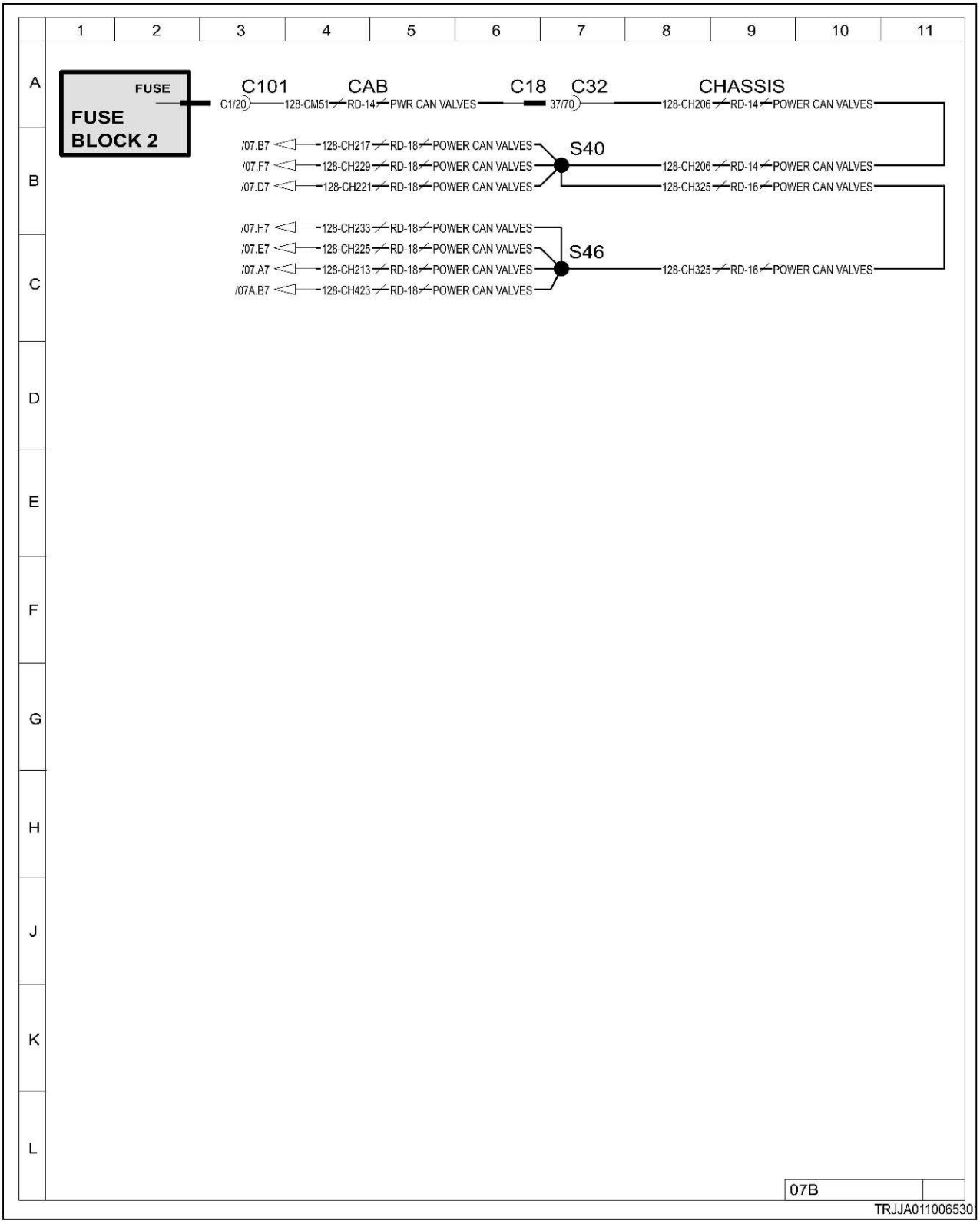

Fig. 644

10.11.2 Code SA 163 SPN 158 FMI 18

Implement valve module 3 is reporting under-voltage.

The implement valve controller module is reporting under-voltage in its supplied power. All implement valves share the same 12-volt power circuit. Unless this error is also reported for all other implement valve controllers, the fault likely lies at or near the reporting valve controller.

Diagnosis and solution

1. Check the voltage at the implement valve module.

a) Turn the key start switch to the on position but do not start the engine.

b) Check the voltage between contacts 2 and 3 at the valve module connector.

Result

- The voltage is at or near 12 volts.

  Replace the valve module.

  See step 3 to validate the repair.
- The voltage is below 12 Volts.

  Continue.

c) Check the voltage between contacts 2 and 3 of a nearby implement valve module connector, which is not reporting this same error.

Result

- All valves are reporting this same error.

  See step 2 to trace power and ground circuits.
- The voltage at this adjacent module is at or near 12 Volts.

  The fault in power is local to the valve module(s) that are reporting the error.

  Repair or replace the harness at the affected valve module(s).

  See step 3 to validate the repair.

2. Isolate the source of the voltage drop.

a) Check the voltage between fuse block 2, fuse 1 and chassis ground.

Result

- The voltage is below 12 volts.

  Inspect the fuse socket and fuse for corrosion.

  See step 3 to validate the repair.
- The voltage is at or near 12 Volts.

  Continue.

b) Check the voltage between contact 37 and chassis ground at the cab harness to chassis harness connector (C18 & C32).

Result

- The voltage is below 12 volts.

  Repair or replace the cab harness.

  See step 3 to validate the repair.
- The voltage is at or near 12 Volts.

  Repair or replace the chassis harness.

  See step 3 to validate the repair.

3. Check if the diagnostic code remains.

a) Inspect and clean the harness connector contacts.

b) Connect all the connectors.

c) Turn the battery disconnect switch to the on position.

d) Turn the key start switch to the on position.

e) Operate the machine at low idle.

f) Check if the diagnostic code remains.

Result

- SA 163 SPN 158 FMI 18 is not active.

  Stop.
- SA 163 SPN 158 FMI 18 is active.

  If the diagnostic code remains active, replace the valve module.

  Stop.

10.11.2.1 Auxiliary valves electrical schematic

Auxiliary valve assembly

Item	Description
1	Controller
2	Proportional solenoid
3	Directional solenoid

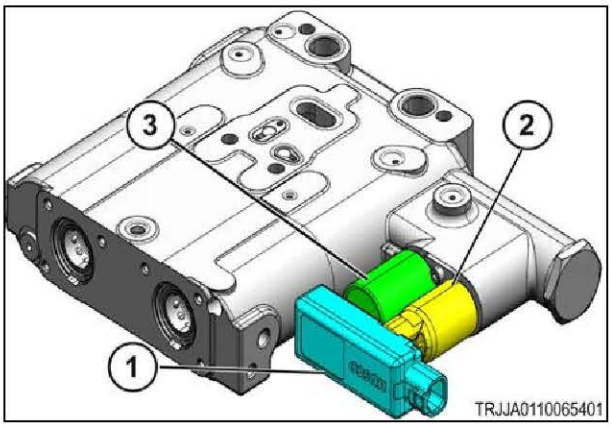

Fig. 645

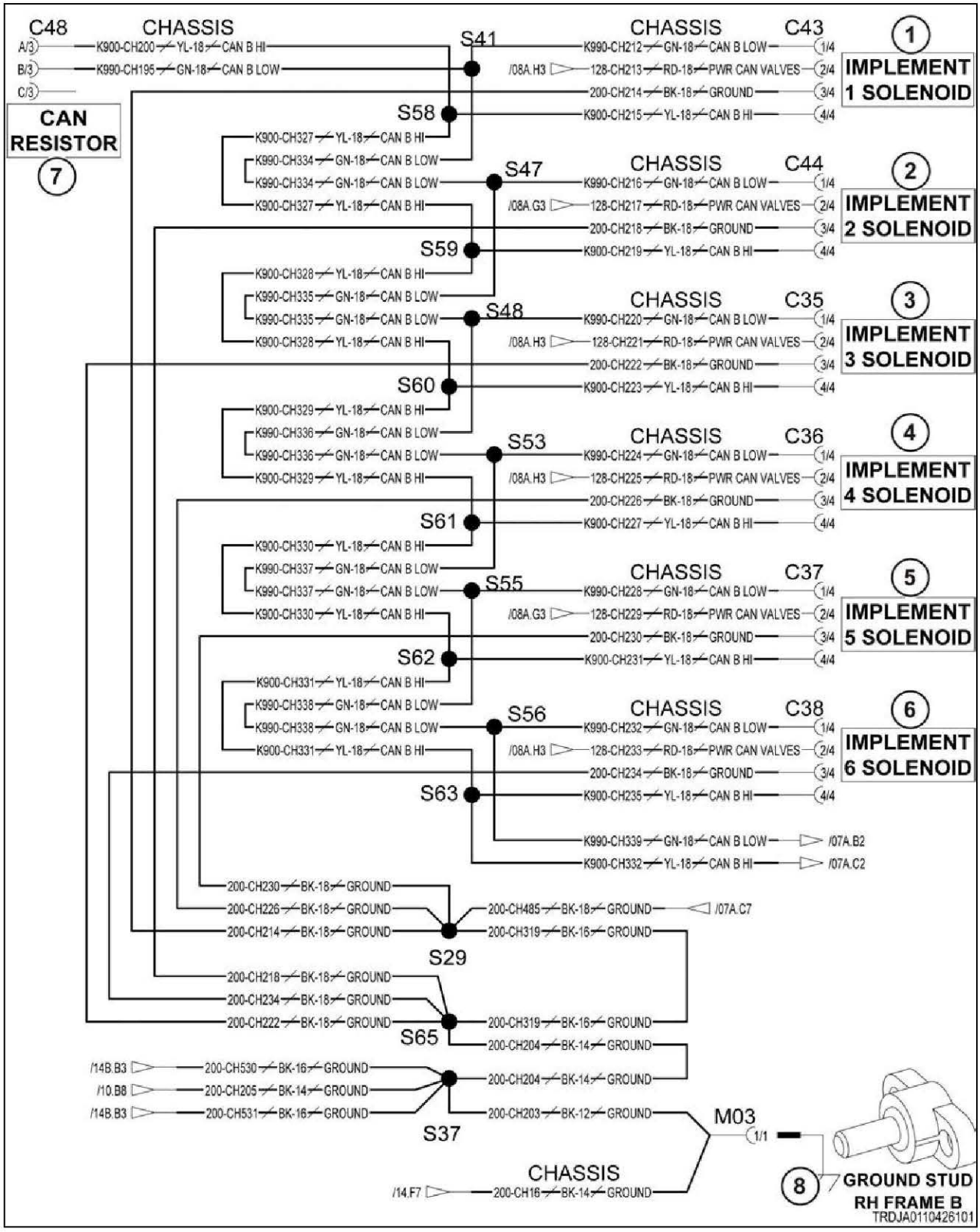
C48
CHASSIS
A/3
K900-CH200
YL-18
CAN B HI
B/3
K990-CH195
GN-18
CAN B LOW
C/3
CAN RESISTOR
7
S41
S58
S47
S59
S48
S60
S53
S61
S55
S62
S56
S63
S29
S65
S37
CHASSIS
C43
K990-CH212
GN-18
CAN B LOW
1/4
/08A.H3
128-CH213
RD-18
PWR CAN VALVES
2/4
200-CH214
BK-18
GROUND
3/4
K900-CH215
YL-18
CAN B HI
4/4
1
IMPLEMENT 1 SOLENOID
CHASSIS
C44
K990-CH216
GN-18
CAN B LOW
1/4
/08A.G3
128-CH217
RD-18
PWR CAN VALVES
2/4
200-CH218
BK-18
GROUND
3/4
K900-CH219
YL-18
CAN B HI
4/4
2
IMPLEMENT 2 SOLENOID
CHASSIS
C35
K990-CH220
GN-18
CAN B LOW
1/4
/08A.H3
128-CH221
RD-18
PWR CAN VALVES
2/4
200-CH222
BK-18
GROUND
3/4
K900-CH223
YL-18
CAN B HI
4/4
3
IMPLEMENT 3 SOLENOID
CHASSIS
C36
K990-CH224
GN-18
CAN B LOW
1/4
/08A.H3
128-CH225
RD-18
PWR CAN VALVES
2/4
200-CH226
BK-18
GROUND
3/4
K900-CH227
YL-18
CAN B HI
4/4
4
IMPLEMENT 4 SOLENOID
CHASSIS
C37
K990-CH228
GN-18
CAN B LOW
1/4
/08A.G3
128-CH229
RD-18
PWR CAN VALVES
2/4
200-CH230
BK-18
GROUND
3/4
K900-CH231
YL-18
CAN B HI
4/4
5
IMPLEMENT 5 SOLENOID
CHASSIS
C38
K990-CH232
GN-18
CAN B LOW
1/4
/08A.H3
128-CH233
RD-18
PWR CAN VALVES
2/4
200-CH234
BK-18
GROUND
3/4
K900-CH235
YL-18
CAN B HI
4/4
6
IMPLEMENT 6 SOLENOID
K990-CH339
GN-18
CAN B LOW
/07A.B2
K900-CH332
YL-18
CAN B HI
/07A.C2
K900-CH327
YL-18
CAN B HI
K990-CH334
GN-18
CAN B LOW
K990-CH334
GN-18
CAN B LOW
K900-CH327
YL-18
CAN B HI
K900-CH328
YL-18
CAN B HI
K990-CH335
GN-18
CAN B LOW
K990-CH335
GN-18
CAN B LOW
K900-CH328
YL-18
CAN B HI
K900-CH329
YL-18
CAN B HI
K990-CH336
GN-18
CAN B LOW
K990-CH336
GN-18
CAN B LOW
K900-CH329
YL-18
CAN B HI
K900-CH330
YL-18
CAN B HI
K990-CH337
GN-18
CAN B LOW
K990-CH337
GN-18
CAN B LOW
K900-CH330
YL-18
CAN B HI
K900-CH331
YL-18
CAN B HI
K990-CH338
GN-18
CAN B LOW
K990-CH338
GN-18
CAN B LOW
K900-CH331
YL-18
CAN B HI
200-CH230
BK-18
GROUND
200-CH226
BK-18
GROUND
200-CH214
BK-18
GROUND
200-CH485
BK-18
GROUND
/07A.C7
200-CH319
BK-16
GROUND
200-CH218
BK-18
GROUND
200-CH234
BK-18
GROUND
200-CH222
BK-18
GROUND
200-CH319
BK-16
GROUND
200-CH204
BK-14
GROUND
/14B.B3
200-CH530
BK-16
GROUND
/10.B8
200-CH205
BK-14
GROUND
/14B.B3
200-CH531
BK-16
GROUND
200-CH204
BK-14
GROUND
200-CH203
BK-12
GROUND
M03
1/1
8
GROUND STUD RH FRAME B
CHASSIS
/14.F7
200-CH16
BK-14
GROUND
TRDJA0110426101

Fig. 646

Schematic legend		
Item	**Schematic term**	**Description**
1	IMPLEMENT 1 SOLENOID	Implement 1 solenoid
2	IMPLEMENT 2 SOLENOID	Implement 2 solenoid
3	IMPLEMENT 3 SOLENOID	Implement 3 solenoid
4	IMPLEMENT 4 SOLENOID	Implement 4 solenoid
5	IMPLEMENT 5 SOLENOID	Implement 5 solenoid
6	IMPLEMENT 6 SOLENOID	Implement 6 solenoid
7	CAN RESISTOR	Controller area network (CAN) resistor
8	GROUND STUD RH FRAME B	Ground stud right-hand frame B
--	CAN B LOW	Controller area network (CAN) B low
--	CAN B HI	Controller area network (CAN) B high
--	PWR CAN VALVES	Power controller area network (CAN) valves
--	CAN + AUX	Controller area network (CAN) high auxiliary
--	CAN - AUX	Controller area network (CAN) low auxiliary

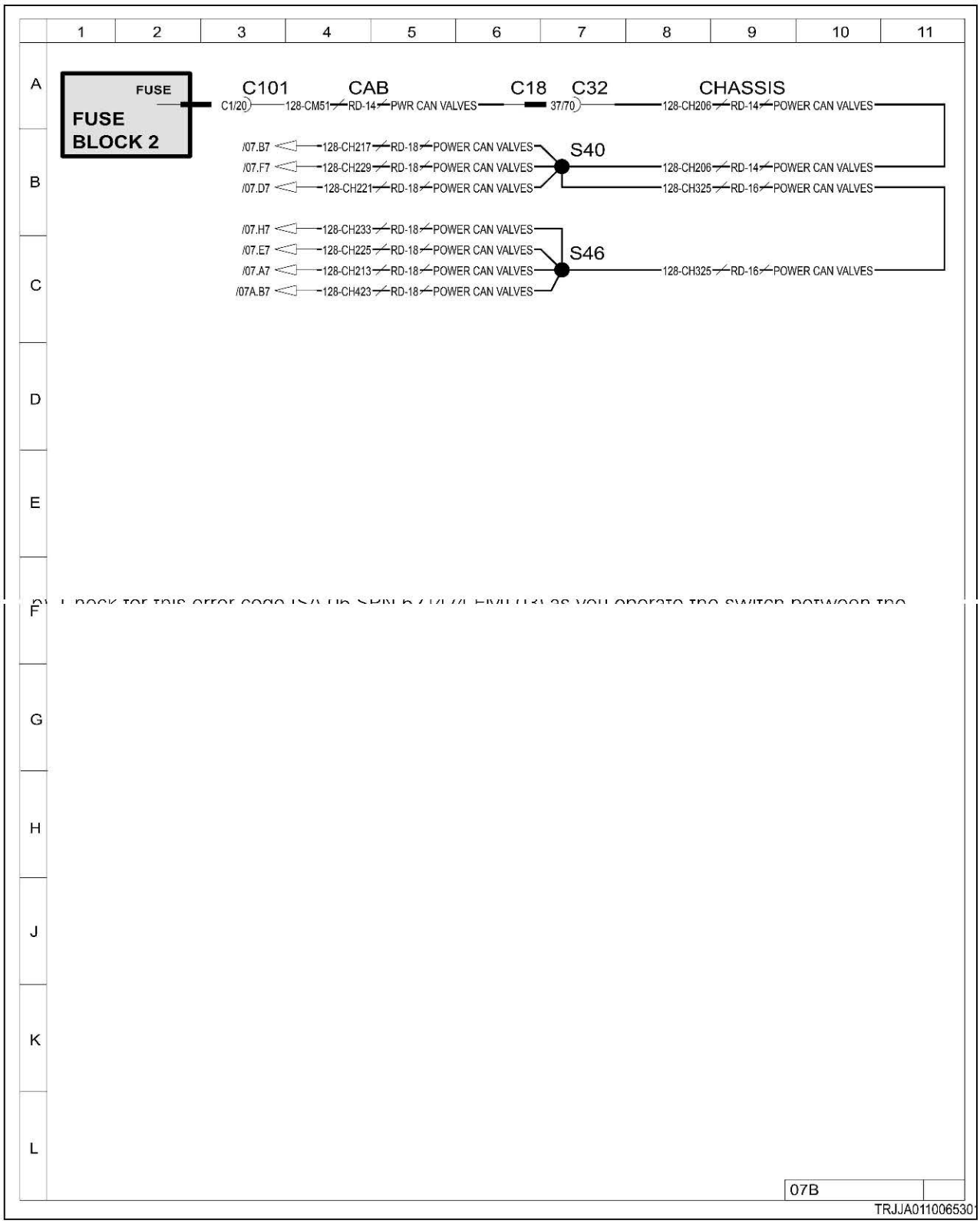

Fig. 647

10.11.3 Code SA 163 SPN 628 FMI 12

Implement valve 3 program memory - malfunction.

Each implement valve has its own controller module, which operates the proportional and directional solenoids. Those solenoids are directly connected to the bottom of each control module. The likely cause for this error is a faulty valve control module.

Diagnosis and solution

1. Reset the module.

a) Turn the key start switch to the off position.
b) Wait 60 seconds.
c) Turn the key start switch to the on position.
d) Check for the fault code.

Result

- The fault code is not active.

  Stop.
- The fault code is active.

  Replace the valve controller.

  See the hydraulics chapter in the service manual to properly program and set up the new controller.

2. Check if the fault code remains.

a) Inspect and clean the harness connector contacts.
b) Connect all the connectors.
c) Turn the battery disconnect switch to the on position.
d) Turn the key start switch to the on position.
e) Operate the machine at low idle.
f) Check for the fault code.

Result

- The fault code is not active.

  Stop.
- The fault code is active.

  Exit the procedure and do the procedure again.

  Stop.

10.11.3.1 CAN 2 electrical schematic

Auxiliary valve assembly

Item	Description
1	Controller
2	Proportional solenoid
3	Directional solenoid

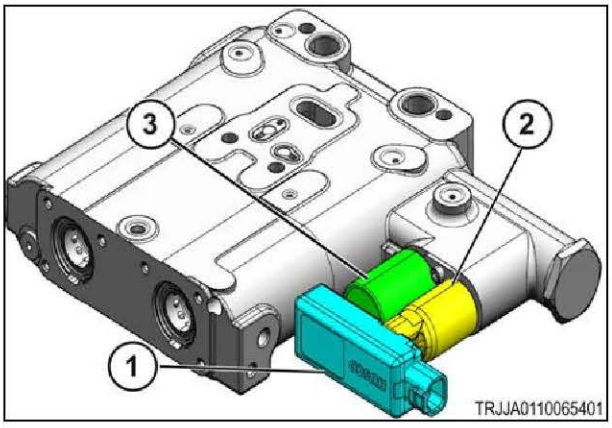

Fig. 648

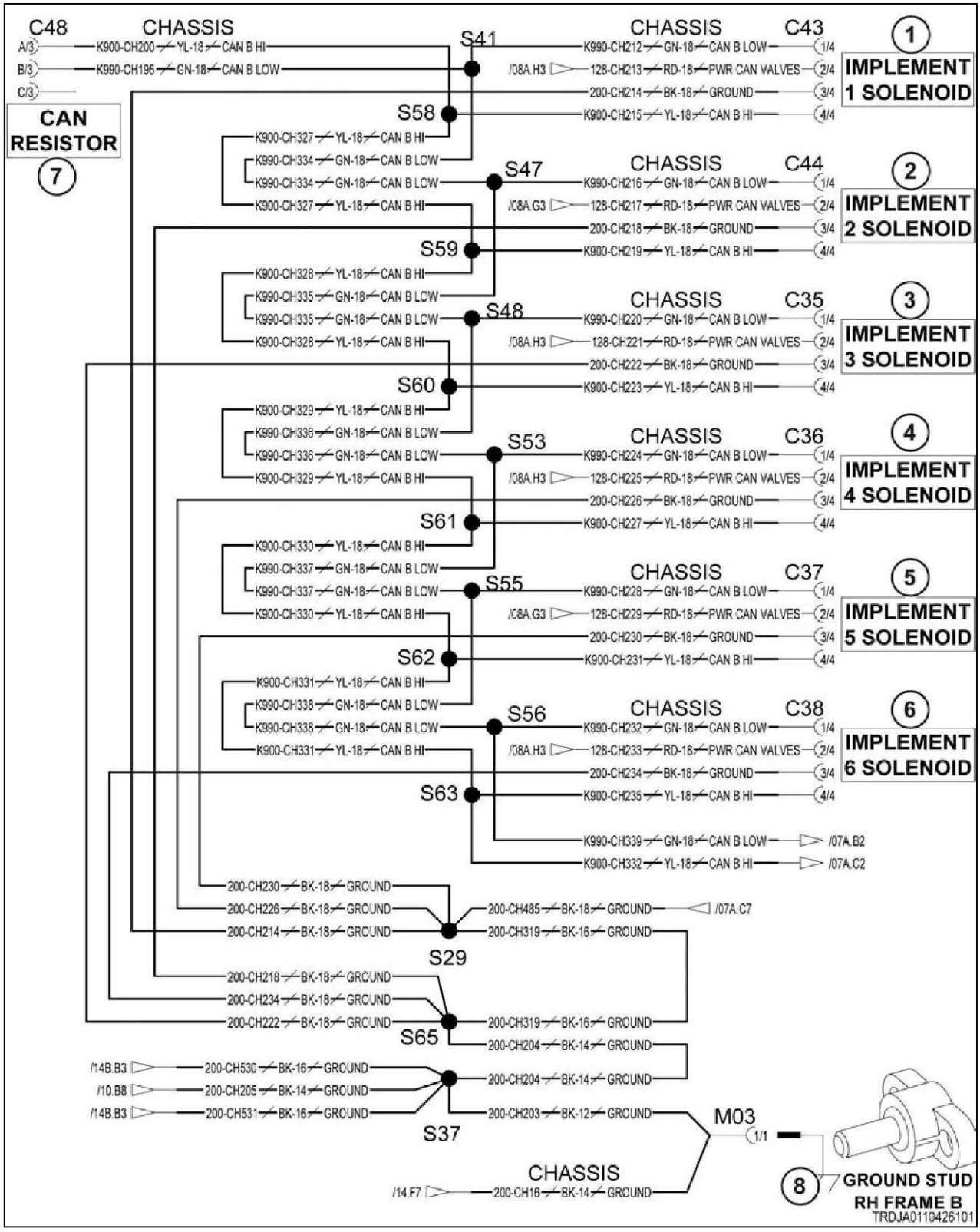
C48
CHASSIS
A/3
K900-CH200
YL-18
CAN B HI
B/3
K990-CH195
GN-18
CAN B LOW
C/3
CAN RESISTOR
7
S41
S58
S47
S59
S48
S60
S53
S61
S55
S62
S56
S63
S29
S65
S37
CHASSIS
C43
K990-CH212
GN-18
CAN B LOW
/08A.H3
128-CH213
RD-18
PWR CAN VALVES
200-CH214
BK-18
GROUND
K900-CH215
YL-18
CAN B HI
1/4
2/4
3/4
4/4
1
IMPLEMENT 1 SOLENOID
CHASSIS
C44
K990-CH216
GN-18
CAN B LOW
/08A.G3
128-CH217
RD-18
PWR CAN VALVES
200-CH218
BK-18
GROUND
K900-CH219
YL-18
CAN B HI
2
IMPLEMENT 2 SOLENOID
CHASSIS
C35
K990-CH220
GN-18
CAN B LOW
/08A.H3
128-CH221
RD-18
PWR CAN VALVES
200-CH222
BK-18
GROUND
K900-CH223
YL-18
CAN B HI
3
IMPLEMENT 3 SOLENOID
CHASSIS
C36
K990-CH224
GN-18
CAN B LOW
/08A.H3
128-CH225
RD-18
PWR CAN VALVES
200-CH226
BK-18
GROUND
K900-CH227
YL-18
CAN B HI
4
IMPLEMENT 4 SOLENOID
CHASSIS
C37
K990-CH228
GN-18
CAN B LOW
/08A.G3
128-CH229
RD-18
PWR CAN VALVES
200-CH230
BK-18
GROUND
K900-CH231
YL-18
CAN B HI
5
IMPLEMENT 5 SOLENOID
CHASSIS
C38
K990-CH232
GN-18
CAN B LOW
/08A.H3
128-CH233
RD-18
PWR CAN VALVES
200-CH234
BK-18
GROUND
K900-CH235
YL-18
CAN B HI
6
IMPLEMENT 6 SOLENOID
K990-CH339
GN-18
CAN B LOW
/07A.B2
K900-CH332
YL-18
CAN B HI
/07A.C2
K900-CH327
K990-CH334
K900-CH328
K990-CH335
K900-CH329
K990-CH336
K900-CH330
K990-CH337
K900-CH331
K990-CH338
200-CH230
200-CH226
200-CH214
200-CH218
200-CH234
200-CH222
200-CH485
200-CH319
200-CH204
200-CH203
BK-18
GROUND
/07A.C7
/14B.B3
200-CH530
/10.B8
200-CH205
BK-14
/14B.B3
200-CH531
BK-16
M03
1/1
8
GROUND STUD
RH FRAME B
/14.F7
200-CH16
BK-12
TRDJA0110426101

Fig. 649

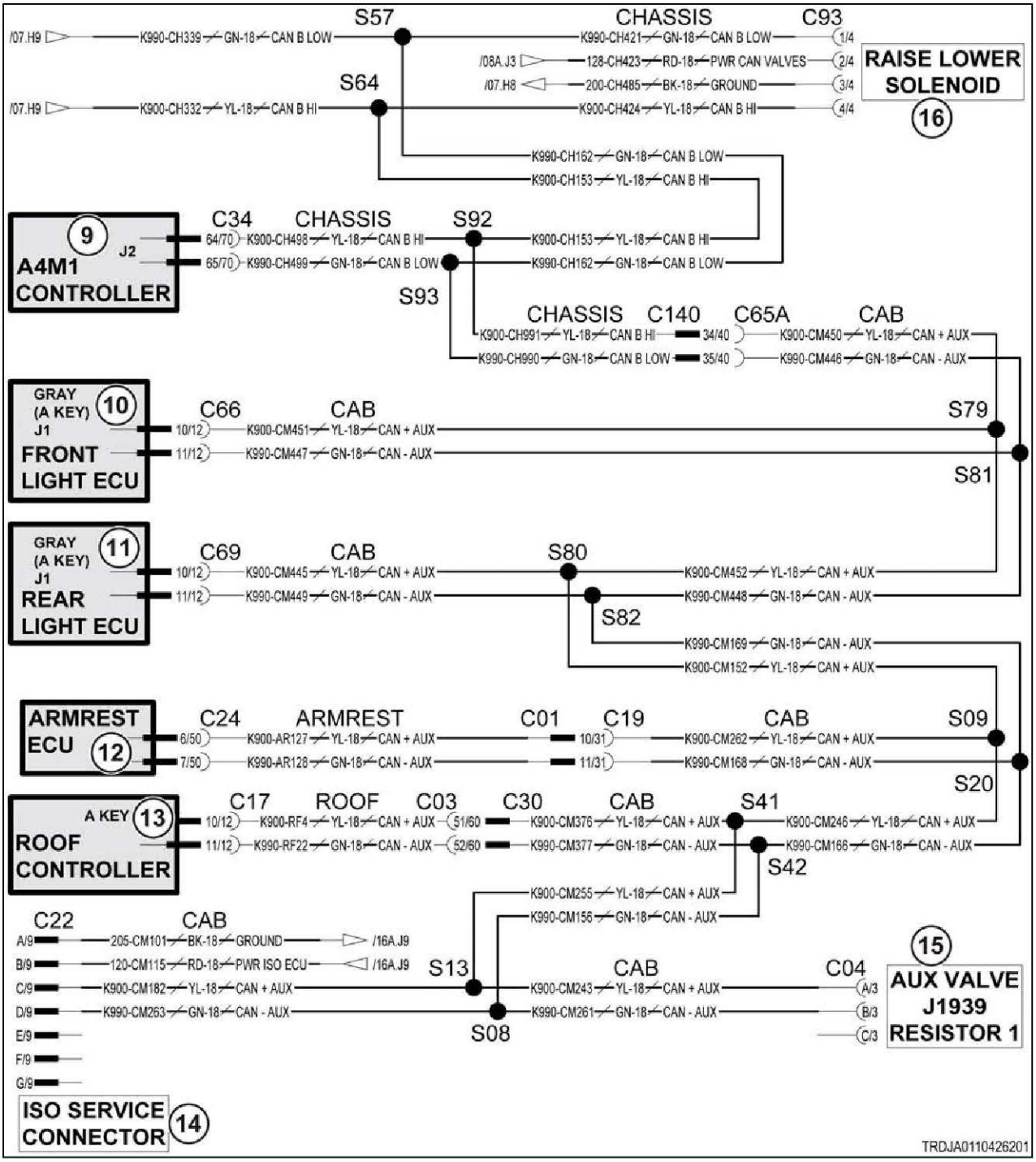

Fig. 650

Schematic legend		
Item	**Schematic term**	**Description**
1	IMPLEMENT 1 SOLENOID	Implement 1 solenoid
2	IMPLEMENT 2 SOLENOID	Implement 2 solenoid
3	IMPLEMENT 3 SOLENOID	Implement 3 solenoid
4	IMPLEMENT 4 SOLENOID	Implement 4 solenoid
5	IMPLEMENT 5 SOLENOID	Implement 5 solenoid
6	IMPLEMENT 6 SOLENOID	Implement 6 solenoid

Schematic legend		
Item	Schematic term	Description
7	CAN RESISTOR	Controller area network (CAN) terminator
8	GROUND STUD RH FRAME B	Ground stud right-hand frame B
9	A4M1 CONTROLLER	Transmission module
10	FRONT LIGHT ECU	Front lighting module
11	REAR LIGHT ECU	Rear lighting module
12	ARMREST ECU	Armrest module
13	ROOF CONTROLLER	Roof module
14	ISO SERVICE CONNECTOR	ISO service connector
15	AUX VALVE J1939 RESISTOR 1	Controller area network (CAN) terminator
16	RAISE LOWER SOLENOID	Raise/lower solenoid
--	CAN B LOW	Controller area network (CAN) B low
--	CAN B HI	Controller area network (CAN) B high
--	PWR CAN VALVES	Power controller area network (CAN) valves
--	CAN + AUX	Controller area network (CAN) high auxiliary
--	CAN - AUX	Controller area network (CAN) low auxiliary

10.11.4 Code SA 163 SPN 639 FMI 19

The Controller Area Network (CAN) is not communicating correctly. The conditions defined by the software were not met.

Diagnosis and solution

1. Make sure the software part numbers are correct

a) Make sure the following information is correct.

- Auxiliary valve 3 module software part number
- Auxiliary valve 3 module part number

Result

Expected result - all part numbers are correct.

Results:

- Yes - all part numbers are correct.

  see step 2, page 10-1107
- No - one or more part number is not correct.

  Install the correct module and flash the correct software.

  see step 3, page 10-1108

2. Check the harness connections.

a) Turn the key start switch to the off position.
b) Turn the battery disconnect switch to the off position.
c) Remove the key from the battery disconnect switch.
d) Check all harness connections.

Result

Expected result - harness connections are good.

Results:

- Yes - harness connections are good.

  see step 3, page 10-1108
- No - harness connections are not good.

  Repair or replace the harness.

  see step 3, page 10-1108

3. Check for other diagnostic codes for this module.

a) Turn the key start switch to the off position.
b) Turn the battery disconnect switch to the off position.
c) Remove the key from the battery disconnect switch.
d) Connect the module using the controller area network (CAN) data link.
e) Turn the battery disconnect switch to the on position.
f) Turn the key start switch to the on position.
g) Check for active diagnostic codes for this module.

Result

Expected result - no diagnostic codes are present for this module.

Results:

- Yes - no diagnostic codes are present.

  Stop.
- No - diagnostic codes are present for this module.

  Failure of this module is possible but not common. Exit the procedure and troubleshoot the active codes. If the diagnostic codes remain active, replace the module.

  Stop.

10.11.5 Code SA 163 SPN 701 FMI 05

Implement valve 3 proportional solenoid is disconnected.

Each implement valve has its own controller module, which operates the proportional and directional solenoids. Those solenoids are directly connected to the bottom of each control module. The likely cause for this error is a faulty solenoid.

Diagnosis and solution

1. Inspect the controller-to-solenoid connections.

a) Turn the key start switch to the off position.
b) Carefully release the controller from both solenoids.

   Each solenoid has a connector retainer. Both must be released to lift the controller away from the solenoids.
c) Clean and inspect the contacts on the controller and both solenoids.
d) Reinstall the controller and all electrical connectors.
e) Turn the key start switch to the on position.
f) Operate the implement valve.
g) Check if the diagnostic code persists.

Result

- The diagnostic code is not active.

  Stop.
- The diagnostic code is active.

  Continue to step 2 to isolate the problem.

2. Temporarily swap adjacent controllers to isolate the problem.

Note that the function will follow the controller. In the cab, auxiliary control lever 3 will still control the original controller at its new location, and the source address (SA) of the diagnostic code will also follow that module.

a) Turn the key start switch to the off position.
b) Number the controller modules for later identification.
c) Swap the controllers from the current valve and one of the other valves that is not reporting any errors.
d) Turn the key start switch to the on position.
e) Operate both implement valves.
f) Check for diagnostic codes.

Result

- The original diagnostic code is still reported.

  The valve controller is at fault.

  Replace the valve controller.

  See the hydraulics chapter in the service manual to properly program and set up the new controller.
- The source address (SA) of the diagnostic code changed to a different location.

  The original solenoid is at fault, and the temporary controller has detected the same error.

  Replace the proportional solenoid.

  See the hydraulics chapter in the service manual to properly set up the old controller for its new solenoid.

g) **Important:** Make sure to return the swapped controllers back to their original location.

3. Check if the diagnostic code remains.

a) Inspect and clean the harness connector contacts.
b) Connect all the connectors.
c) Turn the battery disconnect switch to the on position.
d) Turn the key start switch to the on position.
e) Operate the machine at low idle.
f) Check if the diagnostic code remains.

Result

- SA 163 SPN 701 FMI 05 is not active.

  Stop.
- SA 163 SPN 701 FMI 05 is active.

  Failure of the auxiliary valve module is possible but not common. Exit the procedure and do the procedure again. If the diagnostic code remains active, replace the module.

  Stop.

10.11.6 Code SA 163 SPN 701 FMI 06

Implement valve 3 proportional solenoid has excessive current.

Each implement valve has its own controller module, which operates the proportional and directional solenoids. Those solenoids are directly connected to the bottom of each control module. The likely cause for this error is a faulty solenoid.

Diagnosis and solution

1. Inspect the controller-to-solenoid connections.

a) Turn the key start switch to the off position.
b) Carefully release the controller from both solenoids.

   Each solenoid has a connector retainer. Both must be released to lift the controller away from the solenoids.
c) Clean and inspect the contacts on the controller and both solenoids.
d) Reinstall the controller and all electrical connectors.
e) Turn the key start switch to the on position.
f) Operate the implement valve.
g) Check if the diagnostic code persists.

Result

- The diagnostic code is not active.

  Stop.
- The diagnostic code is active.

  Continue to step 2 to isolate the problem.

2. Temporarily swap adjacent controllers to isolate the problem.

Note that the function will follow the controller. In the cab, auxiliary control lever 3 will still control the original controller at its new location, and the source address (SA) of the diagnostic code will also follow that module.

a) Turn the key start switch to the off position.
b) Number the controller modules for later identification.
c) Swap the controllers from the current valve and one of the other valves that is not reporting any errors.
d) Turn the key start switch to the on position.
e) Operate both implement valves.
f) Check for diagnostic codes.

Result

- The original diagnostic code is still reported.

  The valve controller is at fault.

  Replace the valve controller.

  See the hydraulics chapter in the service manual to properly program and set up the new controller.
- The source address (SA) of the diagnostic code changed to a different location.

  The original solenoid is at fault, and the temporary controller has detected the same error.

  Replace the proportional solenoid.

  See the hydraulics chapter in the service manual to properly set up the old controller for its new solenoid.

g) **Important:** Make sure to return the swapped controllers back to their original location.

3. Check if the diagnostic code remains.

a) Inspect and clean the harness connector contacts.
b) Connect all the connectors.
c) Turn the battery disconnect switch to the on position.
d) Turn the key start switch to the on position.
e) Operate the machine at low idle.
f) Check if the diagnostic code remains.

Result

- SA 163 SPN 701 FMI 06 is not active.

  Stop.
- SA 163 SPN 701 FMI 06 is active.

  Failure of the auxiliary valve module is possible but not common. Exit the procedure and do the procedure again. If the diagnostic code remains active, replace the module.

  Stop.

10.11.7 Code SA 163 SPN 702 FMI 05

Implement valve 3 directional solenoid is disconnected.

Each implement valve has its own controller module, which operates the proportional and directional solenoids. Those solenoids are directly connected to the bottom of each control module. The likely cause for this error is a faulty solenoid.

Diagnosis and solution

1. Inspect the controller-to-solenoid connections.

a) Turn the key start switch to the off position.

b) Carefully release the controller from both solenoids.

Each solenoid has a connector retainer. Both must be released to lift the controller away from the solenoids.

c) Clean and inspect the contacts on the controller and both solenoids.

d) Reinstall the controller and all electrical connectors.

e) Turn the key start switch to the on position.

f) Operate the implement valve.

g) Check if the diagnostic code persists.

Result

- The diagnostic code is not active.

  Stop.
- The diagnostic code is active.

  Continue to step 2 to isolate the problem.

2. Temporarily swap adjacent controllers to isolate the problem.

Note that the function will follow the controller. In the cab, auxiliary control lever 3 will still control the original controller at its new location, and the source address (SA) of the diagnostic code will also follow that module.

a) Turn the key start switch to the off position.

b) Number the controller modules for later identification.

c) Swap the controllers from the current valve and one of the other valves that is not reporting any errors.

d) Turn the key start switch to the on position.

e) Operate both implement valves.

f) Check for diagnostic codes.

Result

- The original diagnostic code is still reported.

  The valve controller is at fault.

  Replace the valve controller.

  See the hydraulics chapter in the service manual to properly program and set up the new controller.
- The source address (SA) of the diagnostic code changed to a different location.

  The original solenoid is at fault, and the temporary controller has detected the same error.

  Replace the directional solenoid.

  See the hydraulics chapter in the service manual to properly set up the old controller for its new solenoid.

g) **Important:** Make sure to return the swapped controllers back to their original location.

3. Check if the diagnostic code remains.

a) Inspect and clean the harness connector contacts.
b) Connect all the connectors.
c) Turn the battery disconnect switch to the on position.
d) Turn the key start switch to the on position.
e) Operate the machine at low idle.
f) Check if the diagnostic code remains.

Result

- SA 163 SPN 702 FMI 05 is not active.

  Stop.
- SA 163 SPN 702 FMI 05 is active.

  Failure of the auxiliary valve module is possible but not common. Exit the procedure and do the procedure again. If the diagnostic code remains active, replace the module.

  Stop.

10.11.8 Code SA 163 SPN 702 FMI 06

Implement valve 3 directional solenoid has excessive current.

Each implement valve has its own controller module, which operates the proportional and directional solenoids. Those solenoids are directly connected to the bottom of each control module. The likely cause for this error is a faulty solenoid.

Diagnosis and solution

1. Inspect the controller-to-solenoid connections.

a) Turn the key start switch to the off position.
b) Carefully release the controller from both solenoids.

   Each solenoid has a connector retainer. Both must be released to lift the controller away from the solenoids.
c) Clean and inspect the contacts on the controller and both solenoids.
d) Reinstall the controller and all electrical connectors.
e) Turn the key start switch to the on position.
f) Operate the implement valve.
g) Check if the diagnostic code persists.

Result

- The diagnostic code is not active.

  Stop.
- The diagnostic code is active.

  Continue to step 2 to isolate the problem.

2. Temporarily swap adjacent controllers to isolate the problem.

Note that the function will follow the controller. In the cab, auxiliary control lever 3 will still control the original controller at its new location, and the source address (SA) of the diagnostic code will also follow that module.

a) Turn the key start switch to the off position.
b) Number the controller modules for later identification.
c) Swap the controllers from the current valve and one of the other valves that is not reporting any errors.
d) Turn the key start switch to the on position.
e) Operate both implement valves.
f) Check for diagnostic codes.

Result

- The original diagnostic code is still reported.

  The valve controller is at fault.

  Replace the valve controller.

  See the hydraulics chapter in the service manual to properly program and set up the new controller.
- The source address (SA) of the diagnostic code changed to a different location.

  The original solenoid is at fault, and the temporary controller has detected the same error.

  Replace the directional solenoid.

  See the hydraulics chapter in the service manual to properly set up the old controller for its new solenoid.

g) **Important:** Make sure to return the swapped controllers back to their original location.

3. Check if the diagnostic code remains.

a) Inspect and clean the harness connector contacts.
b) Connect all the connectors.
c) Turn the battery disconnect switch to the on position.
d) Turn the key start switch to the on position.
e) Operate the machine at low idle.
f) Check if the diagnostic code remains.

Result

- SA 163 SPN 702 FMI 06 is not active.

  Stop.
- SA 163 SPN 702 FMI 06 is active.

  Failure of the auxiliary valve module is possible but not common. Exit the procedure and do the procedure again. If the diagnostic code remains active, replace the module.

  Stop.

10.12 164 Auxiliary valve 4 module

10.12.1 Code SA 164 SPN 158 FMI 00

Implement valve module 4 is reporting over-voltage.

The Implement valve controller module is reporting over-voltage in its supplied power. All Implement valves share the same 12-volt power circuit. Unless this error is also reported for all other Implement valve controllers, the reporting controller is faulty.

Diagnosis and solution

1. Check the voltage at the auxiliary valve module.

a) Turn the key start switch to the on position but do not start the engine.

b) Check the voltage between contacts 2 and 3 at the valve module connector.

Result

- The voltage is above 12 Volts.

  Troubleshoot the charging system.
- The voltage is at or near 12 volts.

  Replace the valve module.

  See step 2 to validate the repair.

2. Check if the diagnostic code remains.

a) Check and clean the harness connector contacts.

b) Connect all the connectors.

c) Turn the battery disconnect switch to the on position.

d) Turn the key start switch to the on position.

e) Operate the machine at low idle.

f) Check if the diagnostic code remains.

Result

- SA 164 SPN 158 FMI 00 is not active.

  Stop.
- SA 164 SPN 158 FMI 00 is active.

  Replace the valve module.

  Stop.

10.12.1.1 Auxiliary valves electrical schematic

Auxiliary valve assembly

Item	Description
1	Controller
2	Proportional solenoid
3	Directional solenoid

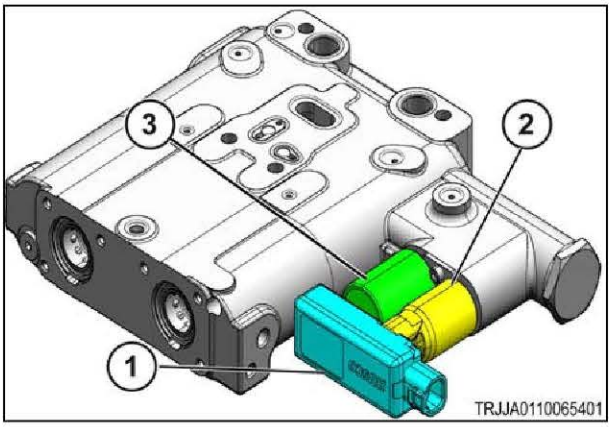

Fig. 651

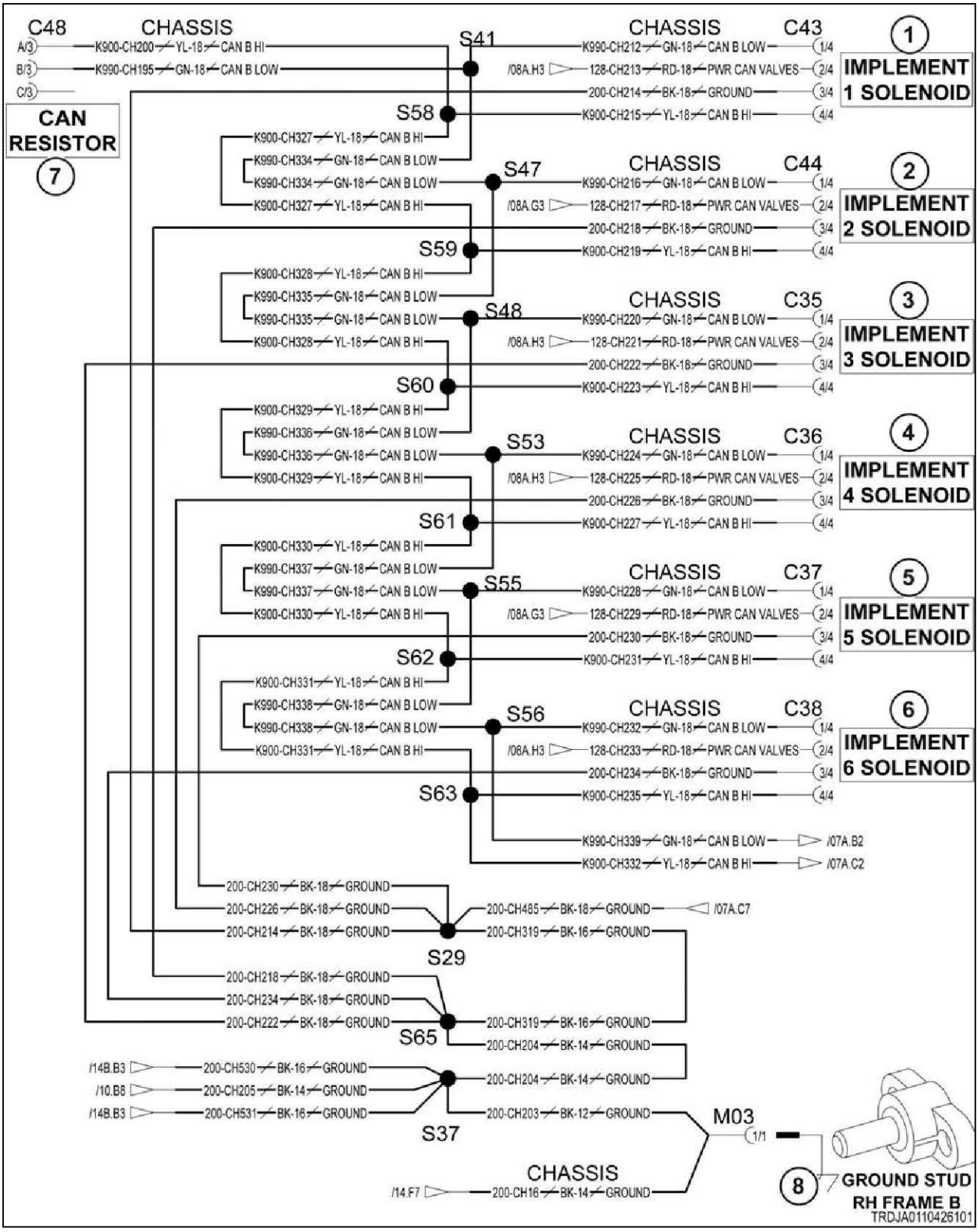
C48
CHASSIS
A/3
B/3
C/3
K900-CH200 YL-18 CAN B HI
K990-CH195 GN-18 CAN B LOW
CAN RESISTOR
7
S41
S58
S47
S59
S48
S60
S53
S61
S55
S62
S56
S63
S29
S65
S37
CHASSIS C43
K990-CH212 GN-18 CAN B LOW 1/4
/08A.H3 128-CH213 RD-18 PWR CAN VALVES 2/4
200-CH214 BK-18 GROUND 3/4
K900-CH215 YL-18 CAN B HI 4/4
1 IMPLEMENT 1 SOLENOID
CHASSIS C44
K990-CH216 GN-18 CAN B LOW 1/4
/08A.G3 128-CH217 RD-18 PWR CAN VALVES 2/4
200-CH218 BK-18 GROUND 3/4
K900-CH219 YL-18 CAN B HI 4/4
2 IMPLEMENT 2 SOLENOID
CHASSIS C35
K990-CH220 GN-18 CAN B LOW 1/4
/08A.H3 128-CH221 RD-18 PWR CAN VALVES 2/4
200-CH222 BK-18 GROUND 3/4
K900-CH223 YL-18 CAN B HI 4/4
3 IMPLEMENT 3 SOLENOID
CHASSIS C36
K990-CH224 GN-18 CAN B LOW 1/4
/08A.H3 128-CH225 RD-18 PWR CAN VALVES 2/4
200-CH226 BK-18 GROUND 3/4
K900-CH227 YL-18 CAN B HI 4/4
4 IMPLEMENT 4 SOLENOID
CHASSIS C37
K990-CH228 GN-18 CAN B LOW 1/4
/08A.G3 128-CH229 RD-18 PWR CAN VALVES 2/4
200-CH230 BK-18 GROUND 3/4
K900-CH231 YL-18 CAN B HI 4/4
5 IMPLEMENT 5 SOLENOID
CHASSIS C38
K990-CH232 GN-18 CAN B LOW 1/4
/08A.H3 128-CH233 RD-18 PWR CAN VALVES 2/4
200-CH234 BK-18 GROUND 3/4
K900-CH235 YL-18 CAN B HI 4/4
6 IMPLEMENT 6 SOLENOID
K990-CH339 GN-18 CAN B LOW /07A.B2
K900-CH332 YL-18 CAN B HI /07A.C2
K900-CH327 YL-18 CAN B HI
K990-CH334 GN-18 CAN B LOW
K990-CH334 GN-18 CAN B LOW
K900-CH327 YL-18 CAN B HI
K900-CH328 YL-18 CAN B HI
K990-CH335 GN-18 CAN B LOW
K990-CH335 GN-18 CAN B LOW
K900-CH328 YL-18 CAN B HI
K900-CH329 YL-18 CAN B HI
K990-CH336 GN-18 CAN B LOW
K990-CH336 GN-18 CAN B LOW
K900-CH329 YL-18 CAN B HI
K900-CH330 YL-18 CAN B HI
K990-CH337 GN-18 CAN B LOW
K990-CH337 GN-18 CAN B LOW
K900-CH330 YL-18 CAN B HI
K900-CH331 YL-18 CAN B HI
K990-CH338 GN-18 CAN B LOW
K990-CH338 GN-18 CAN B LOW
K900-CH331 YL-18 CAN B HI
200-CH230 BK-18 GROUND
200-CH226 BK-18 GROUND
200-CH214 BK-18 GROUND
200-CH485 BK-18 GROUND /07A.C7
200-CH319 BK-16 GROUND
200-CH218 BK-18 GROUND
200-CH234 BK-18 GROUND
200-CH222 BK-18 GROUND
200-CH319 BK-16 GROUND
200-CH204 BK-14 GROUND
/14B.B3 200-CH530 BK-16 GROUND
/10.B8 200-CH205 BK-14 GROUND
/14B.B3 200-CH531 BK-16 GROUND
200-CH204 BK-14 GROUND
200-CH203 BK-12 GROUND
M03
1/1
CHASSIS
/14.F7 200-CH16 BK-14 GROUND
8
GROUND STUD
RH FRAME B
TRDJA0110426101

Fig. 652

Schematic legend		
Item	**Schematic term**	**Description**
1	IMPLEMENT 1 SOLENOID	Implement 1 solenoid
2	IMPLEMENT 2 SOLENOID	Implement 2 solenoid
3	IMPLEMENT 3 SOLENOID	Implement 3 solenoid
4	IMPLEMENT 4 SOLENOID	Implement 4 solenoid
5	IMPLEMENT 5 SOLENOID	Implement 5 solenoid
6	IMPLEMENT 6 SOLENOID	Implement 6 solenoid
7	CAN RESISTOR	Controller area network (CAN) resistor
8	GROUND STUD RH FRAME B	Ground stud right-hand frame B
--	CAN B LOW	Controller area network (CAN) B low
--	CAN B HI	Controller area network (CAN) B high
--	PWR CAN VALVES	Power controller area network (CAN) valves
--	CAN + AUX	Controller area network (CAN) high auxiliary
--	CAN - AUX	Controller area network (CAN) low auxiliary

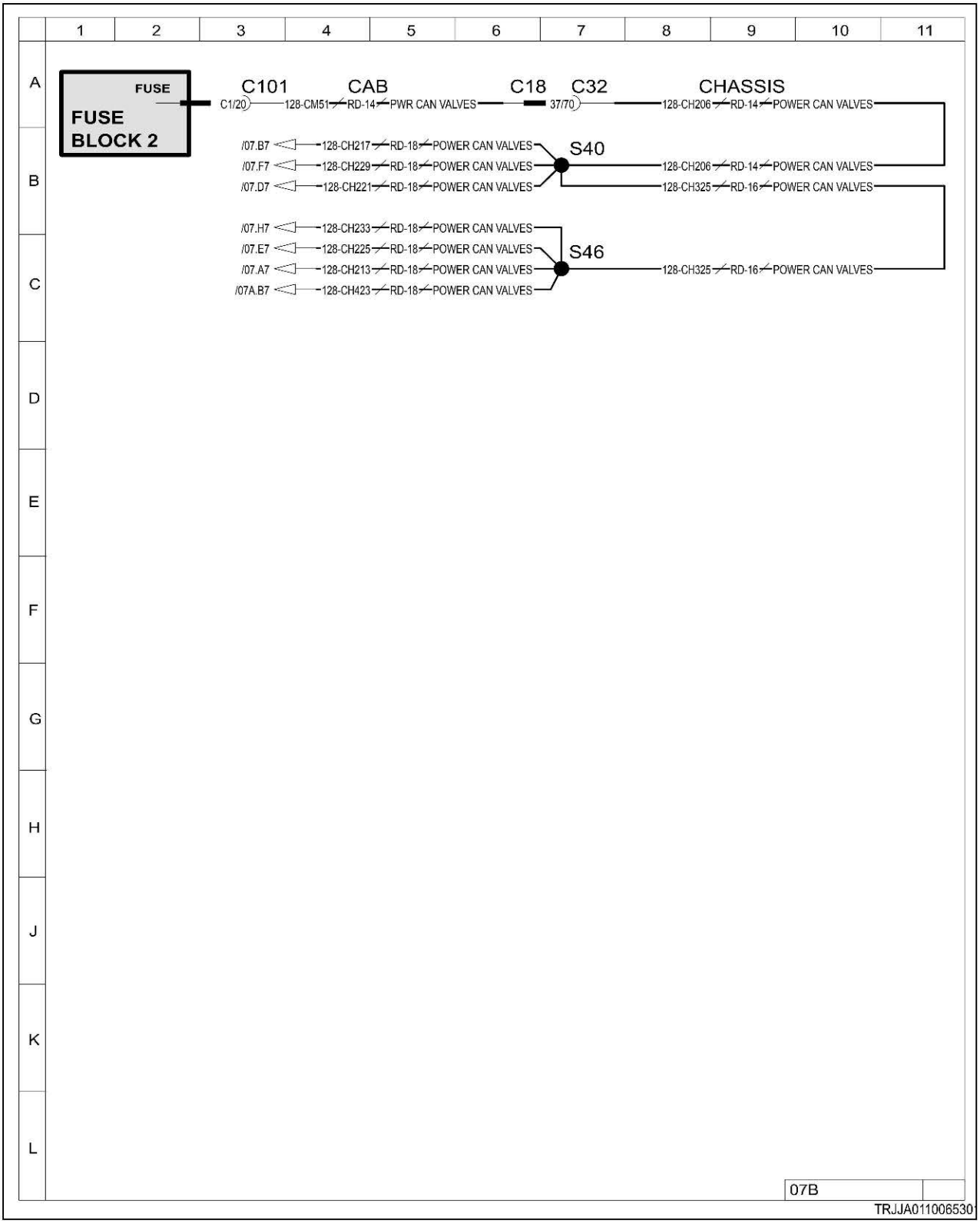

Fig. 653

10.12.2 Code SA 164 SPN 158 FMI 18

Implement valve module 4 is reporting under-voltage.

The implement valve controller module is reporting under-voltage in its supplied power. All implement valves share the same 12-volt power circuit. Unless this error is also reported for all other implement valve controllers, the fault likely lies at or near the reporting valve controller.

Diagnosis and solution

1. Check the voltage at the implement valve module.

a) Turn the key start switch to the on position but do not start the engine.

b) Check the voltage between contacts 2 and 3 at the valve module connector.

Result

- The voltage is at or near 12 volts.

  Replace the valve module.

  See step 3 to validate the repair.
- The voltage is below 12 Volts.

  Continue.

c) Check the voltage between contacts 2 and 3 of a nearby implement valve module connector, which is not reporting this same error.

Result

- All valves are reporting this same error.

  See step 2 to trace power and ground circuits.
- The voltage at this adjacent module is at or near 12 Volts.

  The fault in power is local to the valve module(s) that are reporting the error.

  Repair or replace the harness at the affected valve module(s).

  See step 3 to validate the repair.

2. Isolate the source of the voltage drop.

a) Check the voltage between fuse block 2, fuse 1 and chassis ground.

Result

- The voltage is below 12 volts.

  Inspect the fuse socket and fuse for corrosion.

  See step 3 to validate the repair.
- The voltage is at or near 12 Volts.

  Continue.

b) Check the voltage between contact 37 and chassis ground at the cab harness to chassis harness connector (C18 & C32).

Result

- The voltage is below 12 volts.

  Repair or replace the cab harness.

  See step 3 to validate the repair.
- The voltage is at or near 12 Volts.

  Repair or replace the chassis harness.

  See step 3 to validate the repair.

3. Check if the diagnostic code remains.

a) Inspect and clean the harness connector contacts.

b) Connect all the connectors.

c) Turn the battery disconnect switch to the on position.

d) Turn the key start switch to the on position.

e) Operate the machine at low idle.

f) Check if the diagnostic code remains.

Result

- SA 164 SPN 158 FMI 18 is not active.

  Stop.
- SA 164 SPN 158 FMI 18 is active.

  If the diagnostic code remains active, replace the valve module.

  Stop.

10.12.2.1 Auxiliary valves electrical schematic

Auxiliary valve assembly

Item	Description
1	Controller
2	Proportional solenoid
3	Directional solenoid

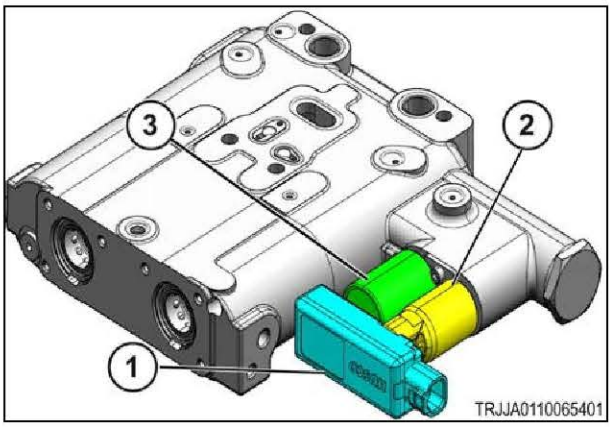

Fig. 654

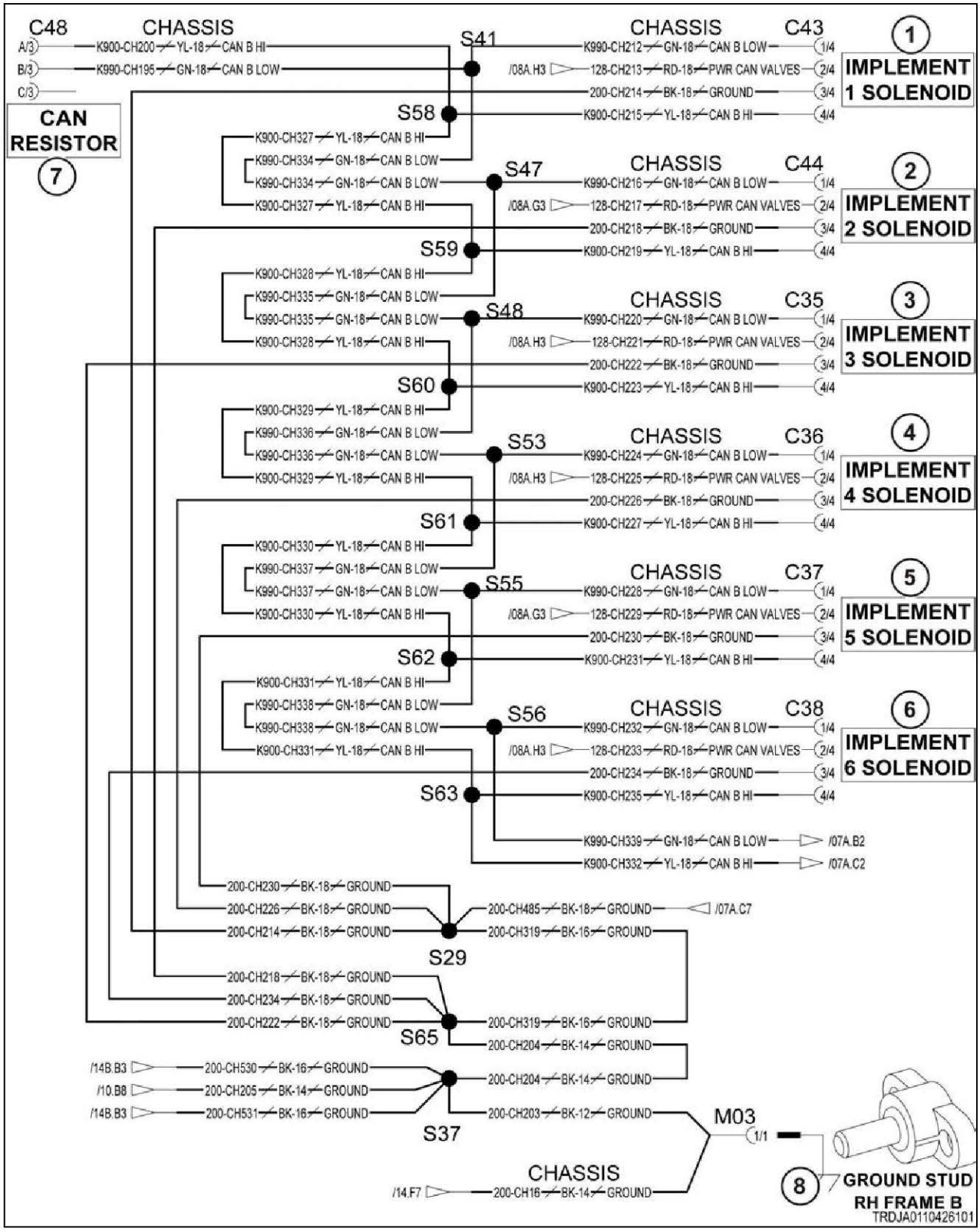
C48
CHASSIS
A/3
B/3
C/3
K900-CH200 YL-18 CAN B HI
K990-CH195 GN-18 CAN B LOW
CAN RESISTOR
7
S41
S58
S47
S59
S48
S60
S53
S61
S55
S62
S56
S63
CHASSIS C43
K990-CH212 GN-18 CAN B LOW 1/4
/08A.H3 128-CH213 RD-18 PWR CAN VALVES 2/4
200-CH214 BK-18 GROUND 3/4
K900-CH215 YL-18 CAN B HI 4/4
1 IMPLEMENT 1 SOLENOID
CHASSIS C44
K990-CH216 GN-18 CAN B LOW 1/4
/08A.G3 128-CH217 RD-18 PWR CAN VALVES 2/4
200-CH218 BK-18 GROUND 3/4
K900-CH219 YL-18 CAN B HI 4/4
2 IMPLEMENT 2 SOLENOID
CHASSIS C35
K990-CH220 GN-18 CAN B LOW 1/4
/08A.H3 128-CH221 RD-18 PWR CAN VALVES 2/4
200-CH222 BK-18 GROUND 3/4
K900-CH223 YL-18 CAN B HI 4/4
3 IMPLEMENT 3 SOLENOID
CHASSIS C36
K990-CH224 GN-18 CAN B LOW 1/4
/08A.H3 128-CH225 RD-18 PWR CAN VALVES 2/4
200-CH226 BK-18 GROUND 3/4
K900-CH227 YL-18 CAN B HI 4/4
4 IMPLEMENT 4 SOLENOID
CHASSIS C37
K990-CH228 GN-18 CAN B LOW 1/4
/08A.G3 128-CH229 RD-18 PWR CAN VALVES 2/4
200-CH230 BK-18 GROUND 3/4
K900-CH231 YL-18 CAN B HI 4/4
5 IMPLEMENT 5 SOLENOID
CHASSIS C38
K990-CH232 GN-18 CAN B LOW 1/4
/08A.H3 128-CH233 RD-18 PWR CAN VALVES 2/4
200-CH234 BK-18 GROUND 3/4
K900-CH235 YL-18 CAN B HI 4/4
6 IMPLEMENT 6 SOLENOID
K990-CH339 GN-18 CAN B LOW /07A.B2
K900-CH332 YL-18 CAN B HI /07A.C2
K900-CH327 YL-18 CAN B HI
K990-CH334 GN-18 CAN B LOW
K990-CH334 GN-18 CAN B LOW
K900-CH327 YL-18 CAN B HI
K900-CH328 YL-18 CAN B HI
K990-CH335 GN-18 CAN B LOW
K990-CH335 GN-18 CAN B LOW
K900-CH328 YL-18 CAN B HI
K900-CH329 YL-18 CAN B HI
K990-CH336 GN-18 CAN B LOW
K990-CH336 GN-18 CAN B LOW
K900-CH329 YL-18 CAN B HI
K900-CH330 YL-18 CAN B HI
K990-CH337 GN-18 CAN B LOW
K990-CH337 GN-18 CAN B LOW
K900-CH330 YL-18 CAN B HI
K900-CH331 YL-18 CAN B HI
K990-CH338 GN-18 CAN B LOW
K990-CH338 GN-18 CAN B LOW
K900-CH331 YL-18 CAN B HI
200-CH230 BK-18 GROUND
200-CH226 BK-18 GROUND
200-CH214 BK-18 GROUND
200-CH485 BK-18 GROUND /07A.C7
200-CH319 BK-16 GROUND
S29
200-CH218 BK-18 GROUND
200-CH234 BK-18 GROUND
200-CH222 BK-18 GROUND
200-CH319 BK-16 GROUND
S65
200-CH204 BK-14 GROUND
/14B.B3 200-CH530 BK-16 GROUND
/10.B8 200-CH205 BK-14 GROUND
/14B.B3 200-CH531 BK-16 GROUND
200-CH204 BK-14 GROUND
200-CH203 BK-12 GROUND
S37
M03
1/1
8
GROUND STUD RH FRAME B
CHASSIS
/14.F7 200-CH16 BK-14 GROUND
TRDJA0110426101

Fig. 655

Schematic legend		
Item	**Schematic term**	**Description**
1	IMPLEMENT 1 SOLENOID	Implement 1 solenoid
2	IMPLEMENT 2 SOLENOID	Implement 2 solenoid
3	IMPLEMENT 3 SOLENOID	Implement 3 solenoid
4	IMPLEMENT 4 SOLENOID	Implement 4 solenoid
5	IMPLEMENT 5 SOLENOID	Implement 5 solenoid
6	IMPLEMENT 6 SOLENOID	Implement 6 solenoid
7	CAN RESISTOR	Controller area network (CAN) resistor
8	GROUND STUD RH FRAME B	Ground stud right-hand frame B
--	CAN B LOW	Controller area network (CAN) B low
--	CAN B HI	Controller area network (CAN) B high
--	PWR CAN VALVES	Power controller area network (CAN) valves
--	CAN + AUX	Controller area network (CAN) high auxiliary
--	CAN - AUX	Controller area network (CAN) low auxiliary

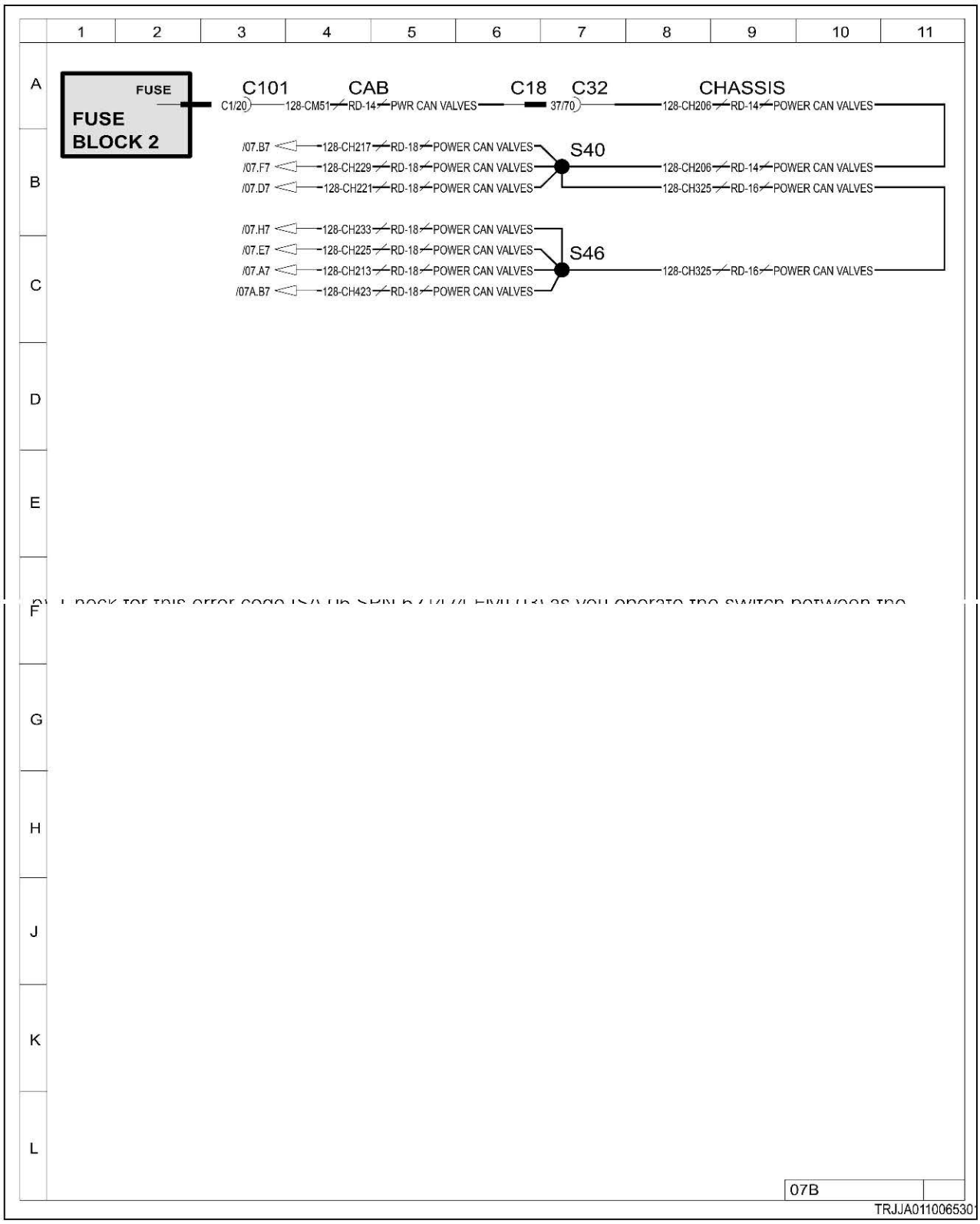

Fig. 656

10.12.3 Code SA 164 SPN 628 FMI 12

Implement valve 4 program memory - malfunction.

Each implement valve has its own controller module, which operates the proportional and directional solenoids. Those solenoids are directly connected to the bottom of each control module. The likely cause for this error is a faulty valve control module.

Diagnosis and solution

1. Reset the module.

a) Turn the key start switch to the off position.
b) Wait 60 seconds.
c) Turn the key start switch to the on position.
d) Check for the fault code.

Result

- The fault code is not active.

  Stop.
- The fault code is active.

  Replace the valve controller.

  See the hydraulics chapter in the service manual to properly program and set up the new controller.

2. Check if the fault code remains.

a) Inspect and clean the harness connector contacts.
b) Connect all the connectors.
c) Turn the battery disconnect switch to the on position.
d) Turn the key start switch to the on position.
e) Operate the machine at low idle.
f) Check for the fault code.

Result

- The fault code is not active.

  Stop.
- The fault code is active.

  Exit the procedure and do the procedure again.

  Stop.

10.12.3.1 CAN 2 electrical schematic

Auxiliary valve assembly

Item	Description
1	Controller
2	Proportional solenoid
3	Directional solenoid

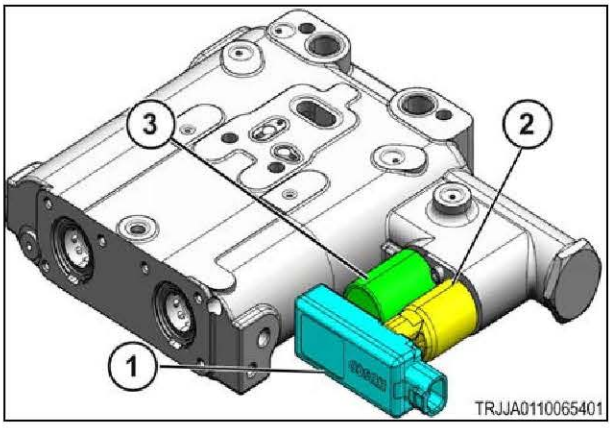

Fig. 657

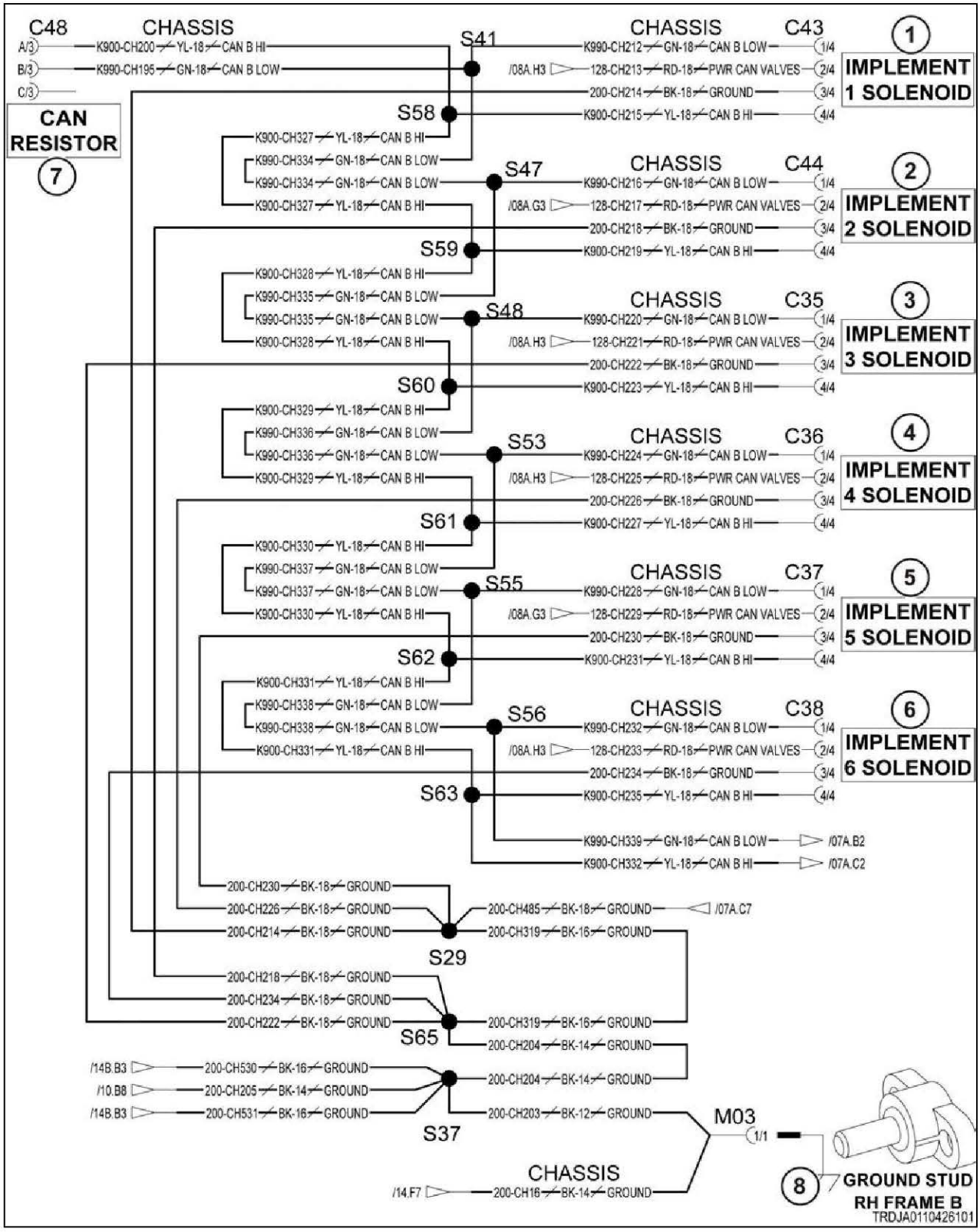
C48
CHASSIS
A/3
B/3
C/3
K900-CH200 YL-18 CAN B HI
K990-CH195 GN-18 CAN B LOW
CAN RESISTOR
7
S41
S58
S47
S59
S48
S60
S53
S61
S55
S62
S56
S63
S29
S65
S37
CHASSIS C43
K990-CH212 GN-18 CAN B LOW 1/4
/08A.H3 128-CH213 RD-18 PWR CAN VALVES 2/4
200-CH214 BK-18 GROUND 3/4
K900-CH215 YL-18 CAN B HI 4/4
1 IMPLEMENT 1 SOLENOID
CHASSIS C44
K990-CH216 GN-18 CAN B LOW 1/4
/08A.G3 128-CH217 RD-18 PWR CAN VALVES 2/4
200-CH218 BK-18 GROUND 3/4
K900-CH219 YL-18 CAN B HI 4/4
2 IMPLEMENT 2 SOLENOID
CHASSIS C35
K990-CH220 GN-18 CAN B LOW 1/4
/08A.H3 128-CH221 RD-18 PWR CAN VALVES 2/4
200-CH222 BK-18 GROUND 3/4
K900-CH223 YL-18 CAN B HI 4/4
3 IMPLEMENT 3 SOLENOID
CHASSIS C36
K990-CH224 GN-18 CAN B LOW 1/4
/08A.H3 128-CH225 RD-18 PWR CAN VALVES 2/4
200-CH226 BK-18 GROUND 3/4
K900-CH227 YL-18 CAN B HI 4/4
4 IMPLEMENT 4 SOLENOID
CHASSIS C37
K990-CH228 GN-18 CAN B LOW 1/4
/08A.G3 128-CH229 RD-18 PWR CAN VALVES 2/4
200-CH230 BK-18 GROUND 3/4
K900-CH231 YL-18 CAN B HI 4/4
5 IMPLEMENT 5 SOLENOID
CHASSIS C38
K990-CH232 GN-18 CAN B LOW 1/4
/08A.H3 128-CH233 RD-18 PWR CAN VALVES 2/4
200-CH234 BK-18 GROUND 3/4
K900-CH235 YL-18 CAN B HI 4/4
6 IMPLEMENT 6 SOLENOID
K990-CH339 GN-18 CAN B LOW /07A.B2
K900-CH332 YL-18 CAN B HI /07A.C2
K900-CH327 YL-18 CAN B HI
K990-CH334 GN-18 CAN B LOW
K990-CH334 GN-18 CAN B LOW
K900-CH327 YL-18 CAN B HI
K900-CH328 YL-18 CAN B HI
K990-CH335 GN-18 CAN B LOW
K990-CH335 GN-18 CAN B LOW
K900-CH328 YL-18 CAN B HI
K900-CH329 YL-18 CAN B HI
K990-CH336 GN-18 CAN B LOW
K990-CH336 GN-18 CAN B LOW
K900-CH329 YL-18 CAN B HI
K900-CH330 YL-18 CAN B HI
K990-CH337 GN-18 CAN B LOW
K990-CH337 GN-18 CAN B LOW
K900-CH330 YL-18 CAN B HI
K900-CH331 YL-18 CAN B HI
K990-CH338 GN-18 CAN B LOW
K990-CH338 GN-18 CAN B LOW
K900-CH331 YL-18 CAN B HI
200-CH230 BK-18 GROUND
200-CH226 BK-18 GROUND
200-CH214 BK-18 GROUND
200-CH485 BK-18 GROUND /07A.C7
200-CH319 BK-16 GROUND
200-CH218 BK-18 GROUND
200-CH234 BK-18 GROUND
200-CH222 BK-18 GROUND
200-CH319 BK-16 GROUND
200-CH204 BK-14 GROUND
/14B.B3 200-CH530 BK-16 GROUND
/10.B8 200-CH205 BK-14 GROUND
/14B.B3 200-CH531 BK-16 GROUND
200-CH204 BK-14 GROUND
200-CH203 BK-12 GROUND
M03
1/1
CHASSIS
/14.F7 200-CH16 BK-14 GROUND
8
GROUND STUD
RH FRAME B
TRDJA0110426101

Fig. 658

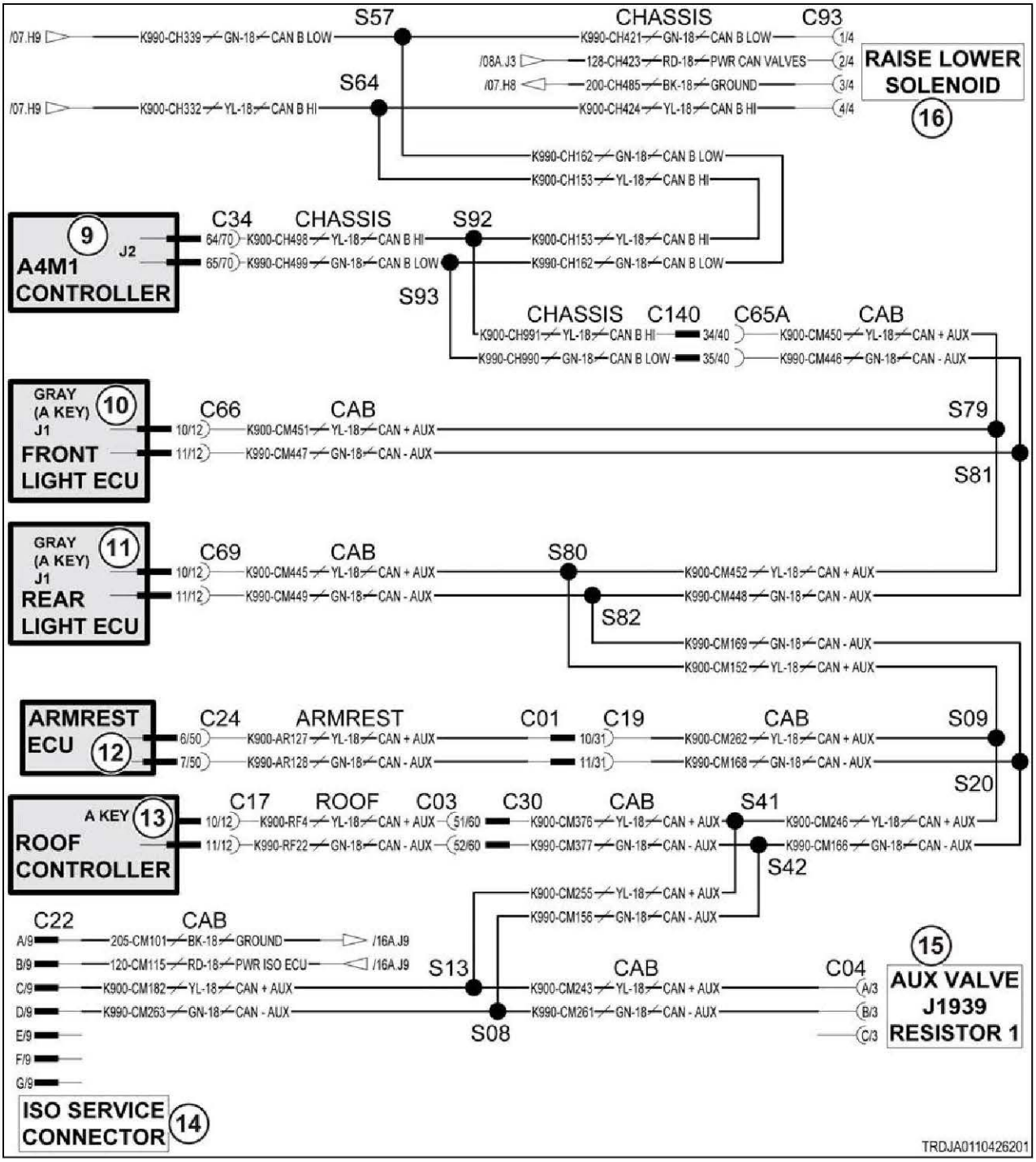

Fig. 659

Schematic legend		
Item	**Schematic term**	**Description**
1	IMPLEMENT 1 SOLENOID	Implement 1 solenoid
2	IMPLEMENT 2 SOLENOID	Implement 2 solenoid
3	IMPLEMENT 3 SOLENOID	Implement 3 solenoid
4	IMPLEMENT 4 SOLENOID	Implement 4 solenoid
5	IMPLEMENT 5 SOLENOID	Implement 5 solenoid
6	IMPLEMENT 6 SOLENOID	Implement 6 solenoid

Schematic legend		
Item	Schematic term	Description
7	CAN RESISTOR	Controller area network (CAN) terminator
8	GROUND STUD RH FRAME B	Ground stud right-hand frame B
9	A4M1 CONTROLLER	Transmission module
10	FRONT LIGHT ECU	Front lighting module
11	REAR LIGHT ECU	Rear lighting module
12	ARMREST ECU	Armrest module
13	ROOF CONTROLLER	Roof module
14	ISO SERVICE CONNECTOR	ISO service connector
15	AUX VALVE J1939 RESISTOR 1	Controller area network (CAN) terminator
16	RAISE LOWER SOLENOID	Raise/lower solenoid
--	CAN B LOW	Controller area network (CAN) B low
--	CAN B HI	Controller area network (CAN) B high
--	PWR CAN VALVES	Power controller area network (CAN) valves
--	CAN + AUX	Controller area network (CAN) high auxiliary
--	CAN - AUX	Controller area network (CAN) low auxiliary

10.12.4 Code SA 164 SPN 639 FMI 19

The Controller Area Network (CAN) is not communicating correctly. The conditions defined by the software were not met.

Diagnosis and solution

1. Make sure the part numbers are correct

- Auxiliary valve 4 module software part number
- Auxiliary valve 4 module part number

Result

Expected result - all part numbers are correct.

Results:

- Yes - all part numbers are correct.

  see step 2, page 10-1127
- No - one or more part number is not correct.

  Install the correct module and flash the correct software.

  see step 3, page 10-1128

2. Inspect the harness connections.

a) Turn the key start switch to the off position.
b) Turn the battery disconnect switch to the off position.
c) Remove the key from the battery disconnect switch.
d) Inspect all harness connections.

Result

Expected result - harness connections are good.

Results:

- Yes - harness connections are good.

  see step 3, page 10-1128
- No - harness connections are not good.

  Repair or replace the harness.

  see step 3, page 10-1128

3. Check for other diagnostic codes for this module.

a) Turn the key start switch to the off position.
b) Turn the battery disconnect switch to the off position.
c) Remove the key from the battery disconnect switch.
d) Connect the module using the controller area network (CAN) data link.
e) Turn the battery disconnect switch to the on position.
f) Turn the key start switch to the on position.
g) Check for active diagnostic codes for this module.

Result

Expected result - no diagnostic codes are active for this module.

Results:

- Yes - no diagnostic codes are active.

  Stop.
- No - diagnostic codes are active for this module.

  Failure of this module is possible but not common. Exit the procedure and troubleshoot the active codes. If the diagnostic code remains active, replace the module.

  Stop.

10.12.5 Code SA 164 SPN 701 FMI 05

Implement valve 4 proportional solenoid is disconnected.

Each implement valve has its own controller module, which operates the proportional and directional solenoids. Those solenoids are directly connected to the bottom of each control module. The likely cause for this error is a faulty solenoid.

Diagnosis and solution

1. Inspect the controller-to-solenoid connections.

a) Turn the key start switch to the off position.
b) Carefully release the controller from both solenoids.

   Each solenoid has a connector retainer. Both must be released to lift the controller away from the solenoids.
c) Clean and inspect the contacts on the controller and both solenoids.
d) Reinstall the controller and all electrical connectors.
e) Turn the key start switch to the on position.
f) Operate the implement valve.
g) Check if the diagnostic code persists.

Result

- The diagnostic code is not active.

  Stop.
- The diagnostic code is active.

  Continue to step 2 to isolate the problem.

2. Temporarily swap adjacent controllers to isolate the problem.

Note that the function will follow the controller. In the cab, auxiliary control lever 4 will still control the original controller at its new location, and the source address (SA) of the diagnostic code will also follow that module.

a) Turn the key start switch to the off position.
b) Number the controller modules for later identification.
c) Swap the controllers from the current valve and one of the other valves that is not reporting any errors.
d) Turn the key start switch to the on position.
e) Operate both implement valves.
f) Check for diagnostic codes.

Result

- The original diagnostic code is still reported.

  The valve controller is at fault.

  Replace the valve controller.

  See the hydraulics chapter in the service manual to properly program and set up the new controller.
- The source address (SA) of the diagnostic code changed to a different location.

  The original solenoid is at fault, and the temporary controller has detected the same error.

  Replace the proportional solenoid.

  See the hydraulics chapter in the service manual to properly set up the old controller for its new solenoid.

g) **Important**: Make sure to return the swapped controllers back to their original location.

3. Check if the diagnostic code remains.
a) Inspect and clean the harness connector contacts.
b) Connect all the connectors.
c) Turn the battery disconnect switch to the on position.
d) Turn the key start switch to the on position.
e) Operate the machine at low idle.
f) Check if the diagnostic code remains.

Result

- SA 164 SPN 701 FMI 05 is not active.

  Stop.
- SA 164 SPN 701 FMI 05 is active.

  Failure of the auxiliary valve module is possible but not common. Exit the procedure and do the procedure again. If the diagnostic code remains active, replace the module.

  Stop.

10.12.6 Code SA 164 SPN 701 FMI 06

Implement valve 4 proportional solenoid has excessive current.

Each implement valve has its own controller module, which operates the proportional and directional solenoids. Those solenoids are directly connected to the bottom of each control module. The likely cause for this error is a faulty solenoid.

Diagnosis and solution

1. Inspect the controller-to-solenoid connections.
a) Turn the key start switch to the off position.
b) Carefully release the controller from both solenoids.

Each solenoid has a connector retainer. Both must be released to lift the controller away from the solenoids.

c) Clean and inspect the contacts on the controller and both solenoids.
d) Reinstall the controller and all electrical connectors.
e) Turn the key start switch to the on position.
f) Operate the implement valve.
g) Check if the diagnostic code persists.

Result

- The diagnostic code is not active.

  Stop.
- The diagnostic code is active.

  Continue to step 2 to isolate the problem.

2. Temporarily swap adjacent controllers to isolate the problem.

Note that the function will follow the controller. In the cab, auxiliary control lever 4 will still control the original controller at its new location, and the source address (SA) of the diagnostic code will also follow that module.

a) Turn the key start switch to the off position.
b) Number the controller modules for later identification.
c) Swap the controllers from the current valve and one of the other valves that is not reporting any errors.
d) Turn the key start switch to the on position.
e) Operate both implement valves.
f) Check for diagnostic codes.

Result

- The original diagnostic code is still reported.

  The valve controller is at fault.

  Replace the valve controller.

  See the hydraulics chapter in the service manual to properly program and set up the new controller.
- The source address (SA) of the diagnostic code changed to a different location.

  The original solenoid is at fault, and the temporary controller has detected the same error.

  Replace the proportional solenoid.

  See the hydraulics chapter in the service manual to properly set up the old controller for its new solenoid.

g) **Important:** Make sure to return the swapped controllers back to their original location.

3. Check if the diagnostic code remains.

a) Inspect and clean the harness connector contacts.
b) Connect all the connectors.
c) Turn the battery disconnect switch to the on position.
d) Turn the key start switch to the on position.
e) Operate the machine at low idle.
f) Check if the diagnostic code remains.

Result

- SA 164 SPN 701 FMI 06 is not active.

  Stop.

- SA 164 SPN 701 FMI 06 is active.

  Failure of the auxiliary valve module is possible but not common. Exit the procedure and do the procedure again. If the diagnostic code remains active, replace the module.

  Stop.

10.12.7 Code SA 164 SPN 702 FMI 05

Implement valve 4 directional solenoid is disconnected.

Each implement valve has its own controller module, which operates the proportional and directional solenoids. Those solenoids are directly connected to the bottom of each control module. The likely cause for this error is a faulty solenoid.

Diagnosis and solution

1. Inspect the controller-to-solenoid connections.
   a) Turn the key start switch to the off position.
   b) Carefully release the controller from both solenoids.

      Each solenoid has a connector retainer. Both must be released to lift the controller away from the solenoids.
   c) Clean and inspect the contacts on the controller and both solenoids.
   d) Reinstall the controller and all electrical connectors.
   e) Turn the key start switch to the on position.
   f) Operate the implement valve.
   g) Check if the diagnostic code persists.

   Result

   - The diagnostic code is not active.

     Stop.
   - The diagnostic code is active.

     Continue to step 2 to isolate the problem.

2. Temporarily swap adjacent controllers to isolate the problem.

   Note that the function will follow the controller. In the cab, auxiliary control lever 4 will still control the original controller at its new location, and the source address (SA) of the diagnostic code will also follow that module.
   a) Turn the key start switch to the off position.
   b) Number the controller modules for later identification.
   c) Swap the controllers from the current valve and one of the other valves that is not reporting any errors.
   d) Turn the key start switch to the on position.
   e) Operate both implement valves.
   f) Check for diagnostic codes.

   Result

   - The original diagnostic code is still reported.

     The valve controller is at fault.

     Replace the valve controller.

     See the hydraulics chapter in the service manual to properly program and set up the new controller.

- The source address (SA) of the diagnostic code changed to a different location.

  The original solenoid is at fault, and the temporary controller has detected the same error.

  Replace the directional solenoid.

  See the hydraulics chapter in the service manual to properly set up the old controller for its new solenoid.

g) **Important:** Make sure to return the swapped controllers back to their original location.

3. Check if the diagnostic code remains.

a) Inspect and clean the harness connector contacts.
b) Connect all the connectors.
c) Turn the battery disconnect switch to the on position.
d) Turn the key start switch to the on position.
e) Operate the machine at low idle.
f) Check if the diagnostic code remains.

Result

- SA 164 SPN 702 FMI 05 is not active.

  Stop.
- SA 164 SPN 702 FMI 05 is active.

  Failure of the auxiliary valve module is possible but not common. Exit the procedure and do the procedure again. If the diagnostic code remains active, replace the module.

  Stop.

10.12.8 Code SA 164 SPN 702 FMI 06

Implement valve 4 directional solenoid has excessive current.

Each implement valve has its own controller module, which operates the proportional and directional solenoids. Those solenoids are directly connected to the bottom of each control module. The likely cause for this error is a faulty solenoid.

Diagnosis and solution

1. Inspect the controller-to-solenoid connections.

a) Turn the key start switch to the off position.
b) Carefully release the controller from both solenoids.

   Each solenoid has a connector retainer. Both must be released to lift the controller away from the solenoids.
c) Clean and inspect the contacts on the controller and both solenoids.
d) Reinstall the controller and all electrical connectors.
e) Turn the key start switch to the on position.
f) Operate the implement valve.
g) Check if the diagnostic code persists.

Result

- The diagnostic code is not active.

  Stop.
- The diagnostic code is active.

  Continue to step 2 to isolate the problem.

2. Temporarily swap adjacent controllers to isolate the problem.

Note that the function will follow the controller. In the cab, auxiliary control lever 4 will still control the original controller at its new location, and the source address (SA) of the diagnostic code will also follow that module.

a) Turn the key start switch to the off position.
b) Number the controller modules for later identification.
c) Swap the controllers from the current valve and one of the other valves that is not reporting any errors.
d) Turn the key start switch to the on position.
e) Operate both implement valves.
f) Check for diagnostic codes.

Result

- The original diagnostic code is still reported.

  The valve controller is at fault.

  Replace the valve controller.

  See the hydraulics chapter in the service manual to properly program and set up the new controller.
- The source address (SA) of the diagnostic code changed to a different location.

  The original solenoid is at fault, and the temporary controller has detected the same error.

  Replace the directional solenoid.

  See the hydraulics chapter in the service manual to properly set up the old controller for its new solenoid.

g) **Important**: Make sure to return the swapped controllers back to their original location.

3. Check if the diagnostic code remains.

a) Inspect and clean the harness connector contacts.
b) Connect all the connectors.
c) Turn the battery disconnect switch to the on position.
d) Turn the key start switch to the on position.
e) Operate the machine at low idle.
f) Check if the diagnostic code remains.

Result

- SA 164 SPN 702 FMI 06 is not active.

  Stop.
- SA 164 SPN 702 FMI 06 is active.

  Failure of the auxiliary valve module is possible but not common. Exit the procedure and do the procedure again. If the diagnostic code remains active, replace the module.

  Stop.

10.13 165 Auxiliary valve 5 module

10.13.1 Code SA 165 SPN 158 FMI 00

Implement valve module 5 is reporting over-voltage.

The Implement valve controller module is reporting over-voltage in its supplied power. All Implement valves share the same 12-volt power circuit. Unless this error is also reported for all other Implement valve controllers, the reporting controller is faulty.

Diagnosis and solution

1. Check the voltage at the auxiliary valve module.

a) Turn the key start switch to the on position but do not start the engine.

b) Check the voltage between contacts 2 and 3 at the valve module connector.

Result

- The voltage is above 12 Volts.

  Troubleshoot the charging system.
- The voltage is at or near 12 volts.

  Replace the valve module.

  See step 2 to validate the repair.

2. Check if the diagnostic code remains.

a) Check and clean the harness connector contacts.

b) Connect all the connectors.

c) Turn the battery disconnect switch to the on position.

d) Turn the key start switch to the on position.

e) Operate the machine at low idle.

f) Check if the diagnostic code remains.

Result

- SA 165 SPN 158 FMI 00 is not active.

  Stop.
- SA 165 SPN 158 FMI 00 is active.

  Replace the valve module.

  Stop.

10.13.1.1 Auxiliary valves electrical schematic

Auxiliary valve assembly

Item	Description
1	Controller
2	Proportional solenoid
3	Directional solenoid

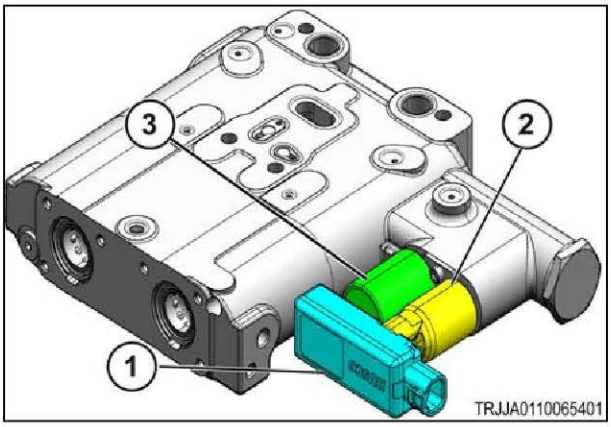

Fig. 660

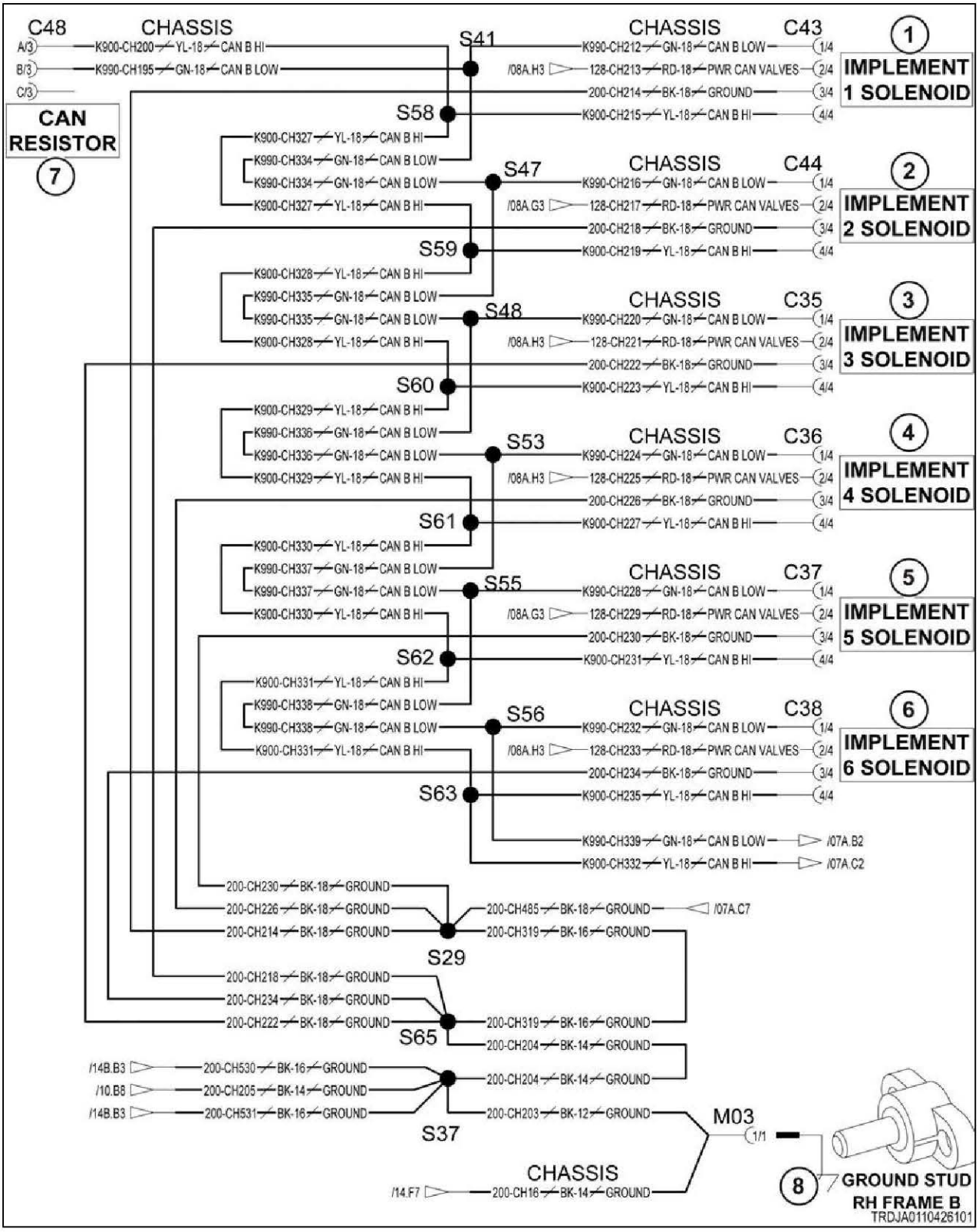
C48
CHASSIS
A/3
B/3
C/3
K900-CH200 YL-18 CAN B HI
K990-CH195 GN-18 CAN B LOW
CAN RESISTOR
7
S41
S58
S47
S59
S48
S60
S53
S61
S55
S62
S56
S63
S29
S65
S37
CHASSIS C43
K990-CH212 GN-18 CAN B LOW 1/4
/08A.H3 128-CH213 RD-18 PWR CAN VALVES 2/4
200-CH214 BK-18 GROUND 3/4
K900-CH215 YL-18 CAN B HI 4/4
1 IMPLEMENT 1 SOLENOID
CHASSIS C44
K990-CH216 GN-18 CAN B LOW 1/4
/08A.G3 128-CH217 RD-18 PWR CAN VALVES 2/4
200-CH218 BK-18 GROUND 3/4
K900-CH219 YL-18 CAN B HI 4/4
2 IMPLEMENT 2 SOLENOID
CHASSIS C35
K990-CH220 GN-18 CAN B LOW 1/4
/08A.H3 128-CH221 RD-18 PWR CAN VALVES 2/4
200-CH222 BK-18 GROUND 3/4
K900-CH223 YL-18 CAN B HI 4/4
3 IMPLEMENT 3 SOLENOID
CHASSIS C36
K990-CH224 GN-18 CAN B LOW 1/4
/08A.H3 128-CH225 RD-18 PWR CAN VALVES 2/4
200-CH226 BK-18 GROUND 3/4
K900-CH227 YL-18 CAN B HI 4/4
4 IMPLEMENT 4 SOLENOID
CHASSIS C37
K990-CH228 GN-18 CAN B LOW 1/4
/08A.G3 128-CH229 RD-18 PWR CAN VALVES 2/4
200-CH230 BK-18 GROUND 3/4
K900-CH231 YL-18 CAN B HI 4/4
5 IMPLEMENT 5 SOLENOID
CHASSIS C38
K990-CH232 GN-18 CAN B LOW 1/4
/08A.H3 128-CH233 RD-18 PWR CAN VALVES 2/4
200-CH234 BK-18 GROUND 3/4
K900-CH235 YL-18 CAN B HI 4/4
6 IMPLEMENT 6 SOLENOID
K990-CH339 GN-18 CAN B LOW /07A.B2
K900-CH332 YL-18 CAN B HI /07A.C2
K900-CH327 YL-18 CAN B HI
K990-CH334 GN-18 CAN B LOW
K990-CH334 GN-18 CAN B LOW
K900-CH327 YL-18 CAN B HI
K900-CH328 YL-18 CAN B HI
K990-CH335 GN-18 CAN B LOW
K990-CH335 GN-18 CAN B LOW
K900-CH328 YL-18 CAN B HI
K900-CH329 YL-18 CAN B HI
K990-CH336 GN-18 CAN B LOW
K990-CH336 GN-18 CAN B LOW
K900-CH329 YL-18 CAN B HI
K900-CH330 YL-18 CAN B HI
K990-CH337 GN-18 CAN B LOW
K990-CH337 GN-18 CAN B LOW
K900-CH330 YL-18 CAN B HI
K900-CH331 YL-18 CAN B HI
K990-CH338 GN-18 CAN B LOW
K990-CH338 GN-18 CAN B LOW
K900-CH331 YL-18 CAN B HI
200-CH230 BK-18 GROUND
200-CH226 BK-18 GROUND
200-CH214 BK-18 GROUND
200-CH485 BK-18 GROUND /07A.C7
200-CH319 BK-16 GROUND
200-CH218 BK-18 GROUND
200-CH234 BK-18 GROUND
200-CH222 BK-18 GROUND
200-CH319 BK-16 GROUND
200-CH204 BK-14 GROUND
/14B.B3 200-CH530 BK-16 GROUND
/10.B8 200-CH205 BK-14 GROUND
/14B.B3 200-CH531 BK-16 GROUND
200-CH204 BK-14 GROUND
200-CH203 BK-12 GROUND
M03
1/1
CHASSIS
/14.F7 200-CH16 BK-14 GROUND
8
GROUND STUD
RH FRAME B
TRDJA0110426101

Fig. 661

Schematic legend		
Item	**Schematic term**	**Description**
1	IMPLEMENT 1 SOLENOID	Implement 1 solenoid
2	IMPLEMENT 2 SOLENOID	Implement 2 solenoid
3	IMPLEMENT 3 SOLENOID	Implement 3 solenoid
4	IMPLEMENT 4 SOLENOID	Implement 4 solenoid
5	IMPLEMENT 5 SOLENOID	Implement 5 solenoid
6	IMPLEMENT 6 SOLENOID	Implement 6 solenoid
7	CAN RESISTOR	Controller area network (CAN) resistor
8	GROUND STUD RH FRAME B	Ground stud right-hand frame B
--	CAN B LOW	Controller area network (CAN) B low
--	CAN B HI	Controller area network (CAN) B high
--	PWR CAN VALVES	Power controller area network (CAN) valves
--	CAN + AUX	Controller area network (CAN) high auxiliary
--	CAN - AUX	Controller area network (CAN) low auxiliary

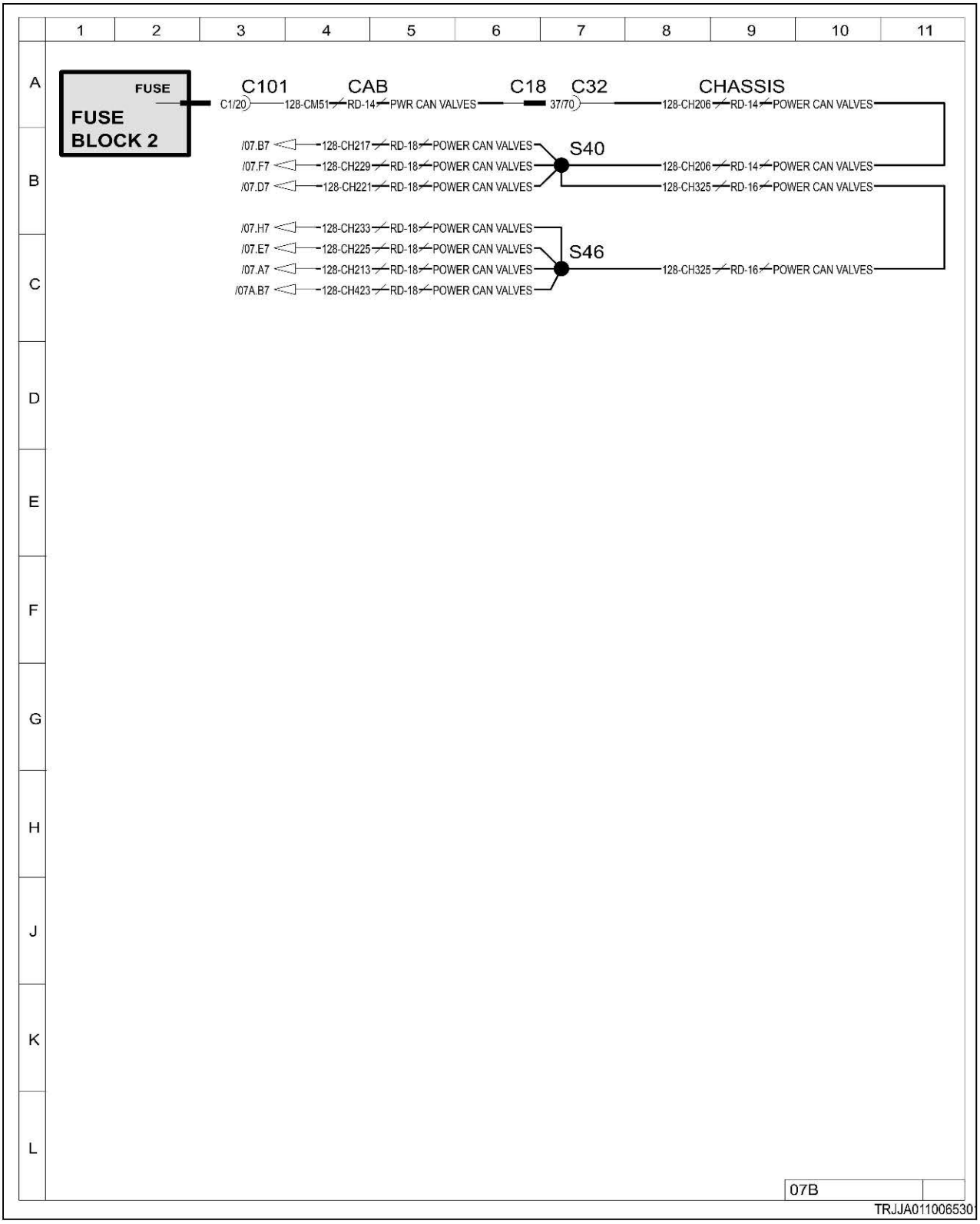

Fig. 662

10.13.2 Code SA 165 SPN 158 FMI 18

Implement valve module 5 is reporting under-voltage.

The implement valve controller module is reporting under-voltage in its supplied power. All implement valves share the same 12-volt power circuit. Unless this error is also reported for all other implement valve controllers, the fault likely lies at or near the reporting valve controller.

Diagnosis and solution

1. Check the voltage at the implement valve module.

a) Turn the key start switch to the on position but do not start the engine.

b) Check the voltage between contacts 2 and 3 at the valve module connector.

Result

- The voltage is at or near 12 volts.

  Replace the valve module.

  See step 3 to validate the repair.
- The voltage is below 12 Volts.

  Continue.

c) Check the voltage between contacts 2 and 3 of a nearby implement valve module connector, which is not reporting this same error.

Result

- All valves are reporting this same error.

  See step 2 to trace power and ground circuits.
- The voltage at this adjacent module is at or near 12 Volts.

  The fault in power is local to the valve module(s) that are reporting the error.

  Repair or replace the harness at the affected valve module(s).

  See step 3 to validate the repair.

2. Isolate the source of the voltage drop.

a) Check the voltage between fuse block 2, fuse 1 and chassis ground.

Result

- The voltage is below 12 volts.

  Inspect the fuse socket and fuse for corrosion.

  See step 3 to validate the repair.
- The voltage is at or near 12 Volts.

  Continue.

b) Check the voltage between contact 37 and chassis ground at the cab harness to chassis harness connector (C18 & C32).

Result

- The voltage is below 12 volts.

  Repair or replace the cab harness.

  See step 3 to validate the repair.
- The voltage is at or near 12 Volts.

  Repair or replace the chassis harness.

  See step 3 to validate the repair.

3. Check if the diagnostic code remains.

a) Inspect and clean the harness connector contacts.

b) Connect all the connectors.

c) Turn the battery disconnect switch to the on position.

d) Turn the key start switch to the on position.

e) Operate the machine at low idle.

f) Check if the diagnostic code remains.

Result

- SA 165 SPN 158 FMI 18 is not active.

  Stop.
- SA 165 SPN 158 FMI 18 is active.

  If the diagnostic code remains active, replace the valve module.

  Stop.

10.13.2.1 Auxiliary valves electrical schematic

Auxiliary valve assembly

Item	Description
1	Controller
2	Proportional solenoid
3	Directional solenoid

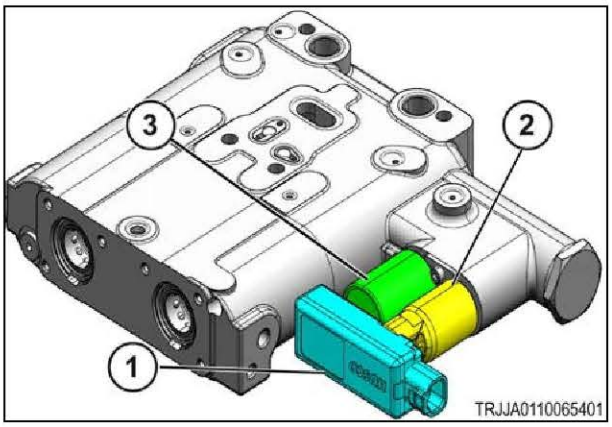

Fig. 663

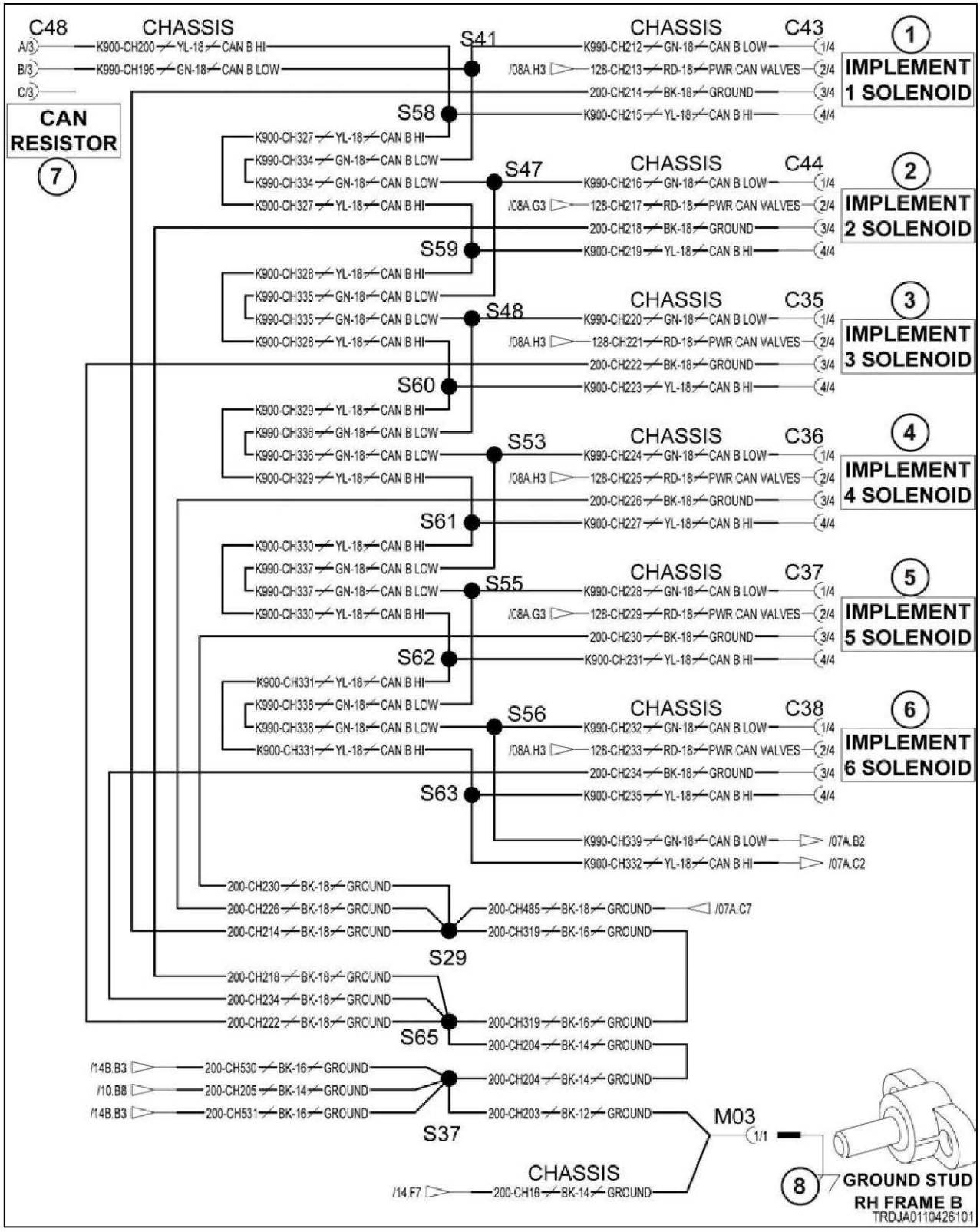
C48
CHASSIS
A/3
K900-CH200
YL-18
CAN B HI
B/3
K990-CH195
GN-18
CAN B LOW
C/3
CAN RESISTOR
7
S41
S58
S47
S59
S48
S60
S53
S61
S55
S62
S56
S63
S29
S65
S37
CHASSIS
C43
K990-CH212
GN-18
CAN B LOW
1/4
/08A.H3
128-CH213
RD-18
PWR CAN VALVES
2/4
200-CH214
BK-18
GROUND
3/4
K900-CH215
YL-18
CAN B HI
4/4
1
IMPLEMENT 1 SOLENOID
CHASSIS
C44
K990-CH216
GN-18
CAN B LOW
1/4
/08A.G3
128-CH217
RD-18
PWR CAN VALVES
2/4
200-CH218
BK-18
GROUND
3/4
K900-CH219
YL-18
CAN B HI
4/4
2
IMPLEMENT 2 SOLENOID
CHASSIS
C35
K990-CH220
GN-18
CAN B LOW
1/4
/08A.H3
128-CH221
RD-18
PWR CAN VALVES
2/4
200-CH222
BK-18
GROUND
3/4
K900-CH223
YL-18
CAN B HI
4/4
3
IMPLEMENT 3 SOLENOID
CHASSIS
C36
K990-CH224
GN-18
CAN B LOW
1/4
/08A.H3
128-CH225
RD-18
PWR CAN VALVES
2/4
200-CH226
BK-18
GROUND
3/4
K900-CH227
YL-18
CAN B HI
4/4
4
IMPLEMENT 4 SOLENOID
CHASSIS
C37
K990-CH228
GN-18
CAN B LOW
1/4
/08A.G3
128-CH229
RD-18
PWR CAN VALVES
2/4
200-CH230
BK-18
GROUND
3/4
K900-CH231
YL-18
CAN B HI
4/4
5
IMPLEMENT 5 SOLENOID
CHASSIS
C38
K990-CH232
GN-18
CAN B LOW
1/4
/08A.H3
128-CH233
RD-18
PWR CAN VALVES
2/4
200-CH234
BK-18
GROUND
3/4
K900-CH235
YL-18
CAN B HI
4/4
6
IMPLEMENT 6 SOLENOID
K990-CH339
GN-18
CAN B LOW
/07A.B2
K900-CH332
YL-18
CAN B HI
/07A.C2
K900-CH327
YL-18
CAN B HI
K990-CH334
GN-18
CAN B LOW
K990-CH334
GN-18
CAN B LOW
K900-CH327
YL-18
CAN B HI
K900-CH328
YL-18
CAN B HI
K990-CH335
GN-18
CAN B LOW
K990-CH335
GN-18
CAN B LOW
K900-CH328
YL-18
CAN B HI
K900-CH329
YL-18
CAN B HI
K990-CH336
GN-18
CAN B LOW
K990-CH336
GN-18
CAN B LOW
K900-CH329
YL-18
CAN B HI
K900-CH330
YL-18
CAN B HI
K990-CH337
GN-18
CAN B LOW
K990-CH337
GN-18
CAN B LOW
K900-CH330
YL-18
CAN B HI
K900-CH331
YL-18
CAN B HI
K990-CH338
GN-18
CAN B LOW
K990-CH338
GN-18
CAN B LOW
K900-CH331
YL-18
CAN B HI
200-CH230
BK-18
GROUND
200-CH226
BK-18
GROUND
200-CH214
BK-18
GROUND
200-CH485
BK-18
GROUND
/07A.C7
200-CH319
BK-16
GROUND
200-CH218
BK-18
GROUND
200-CH234
BK-18
GROUND
200-CH222
BK-18
GROUND
200-CH319
BK-16
GROUND
200-CH204
BK-14
GROUND
/14B.B3
200-CH530
BK-16
GROUND
/10.B8
200-CH205
BK-14
GROUND
/14B.B3
200-CH531
BK-16
GROUND
200-CH204
BK-14
GROUND
200-CH203
BK-12
GROUND
M03
1/1
8
GROUND STUD RH FRAME B
CHASSIS
/14.F7
200-CH16
BK-14
GROUND
TRDJA0110426101

Fig. 664

Schematic legend		
Item	**Schematic term**	**Description**
1	IMPLEMENT 1 SOLENOID	Implement 1 solenoid
2	IMPLEMENT 2 SOLENOID	Implement 2 solenoid
3	IMPLEMENT 3 SOLENOID	Implement 3 solenoid
4	IMPLEMENT 4 SOLENOID	Implement 4 solenoid
5	IMPLEMENT 5 SOLENOID	Implement 5 solenoid
6	IMPLEMENT 6 SOLENOID	Implement 6 solenoid
7	CAN RESISTOR	Controller area network (CAN) resistor
8	GROUND STUD RH FRAME B	Ground stud right-hand frame B
--	CAN B LOW	Controller area network (CAN) B low
--	CAN B HI	Controller area network (CAN) B high
--	PWR CAN VALVES	Power controller area network (CAN) valves
--	CAN + AUX	Controller area network (CAN) high auxiliary
--	CAN - AUX	Controller area network (CAN) low auxiliary

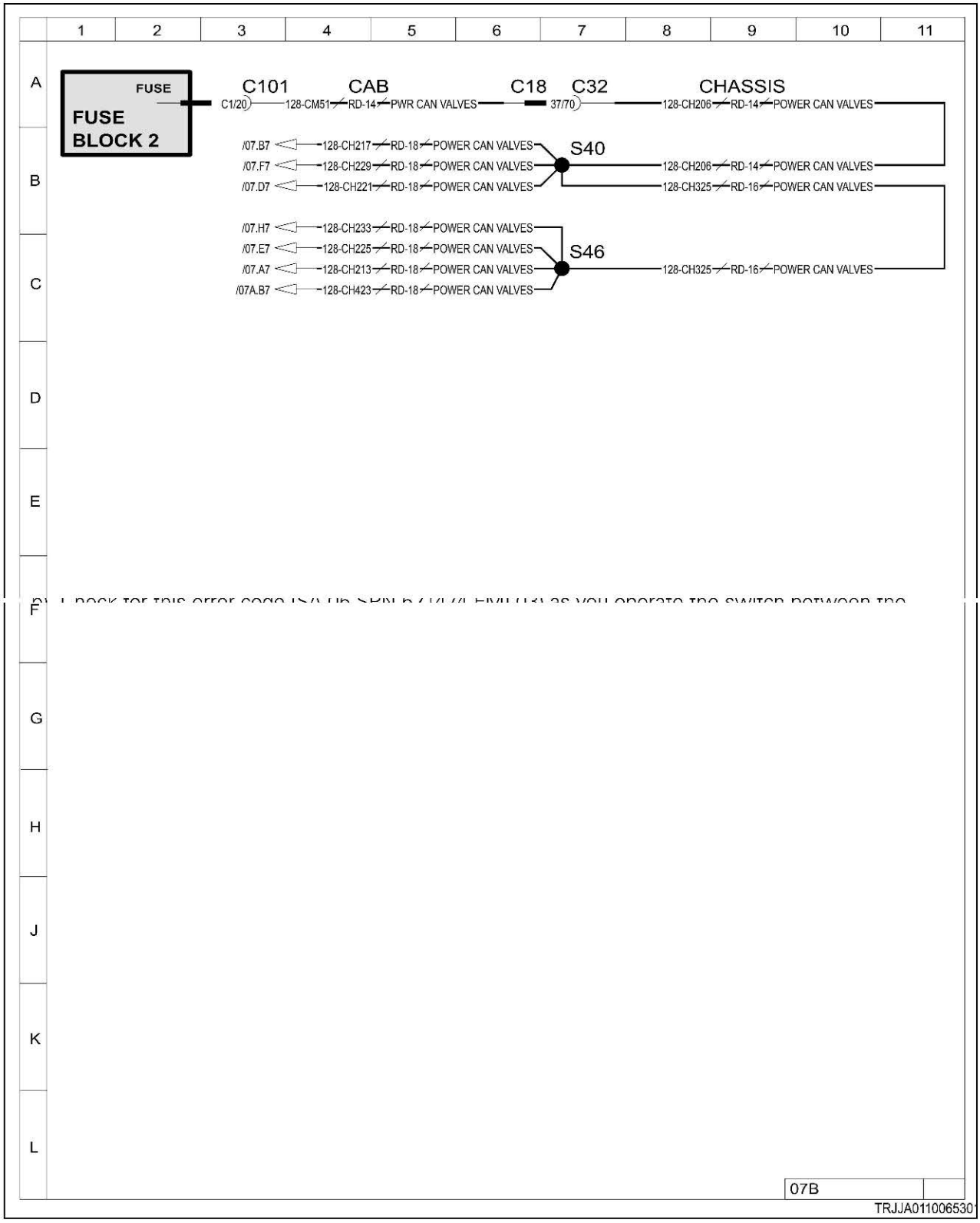

Fig. 665

10.13.3 Code SA 165 SPN 628 FMI 12

Implement valve 5 program memory - malfunction.

Each implement valve has its own controller module, which operates the proportional and directional solenoids. Those solenoids are directly connected to the bottom of each control module. The likely cause for this error is a faulty valve control module.

Diagnosis and solution

1. Reset the module.

a) Turn the key start switch to the off position.
b) Wait 60 seconds.
c) Turn the key start switch to the on position.
d) Check for the fault code.

Result

- The fault code is not active.

  Stop.
- The fault code is active.

  Replace the valve controller.

  See the hydraulics chapter in the service manual to properly program and set up the new controller.

2. Check if the fault code remains.

a) Inspect and clean the harness connector contacts.
b) Connect all the connectors.
c) Turn the battery disconnect switch to the on position.
d) Turn the key start switch to the on position.
e) Operate the machine at low idle.
f) Check for the fault code.

Result

- The fault code is not active.

  Stop.
- The fault code is active.

  Exit the procedure and do the procedure again.

  Stop.

10.13.3.1 CAN 2 electrical schematic

Auxiliary valve assembly

Item	Description
1	Controller
2	Proportional solenoid
3	Directional solenoid

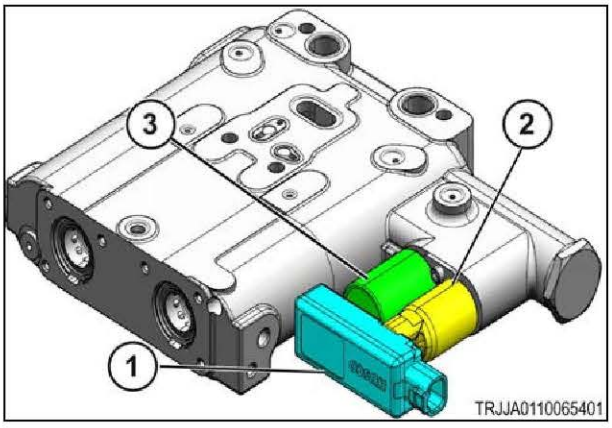

Fig. 666

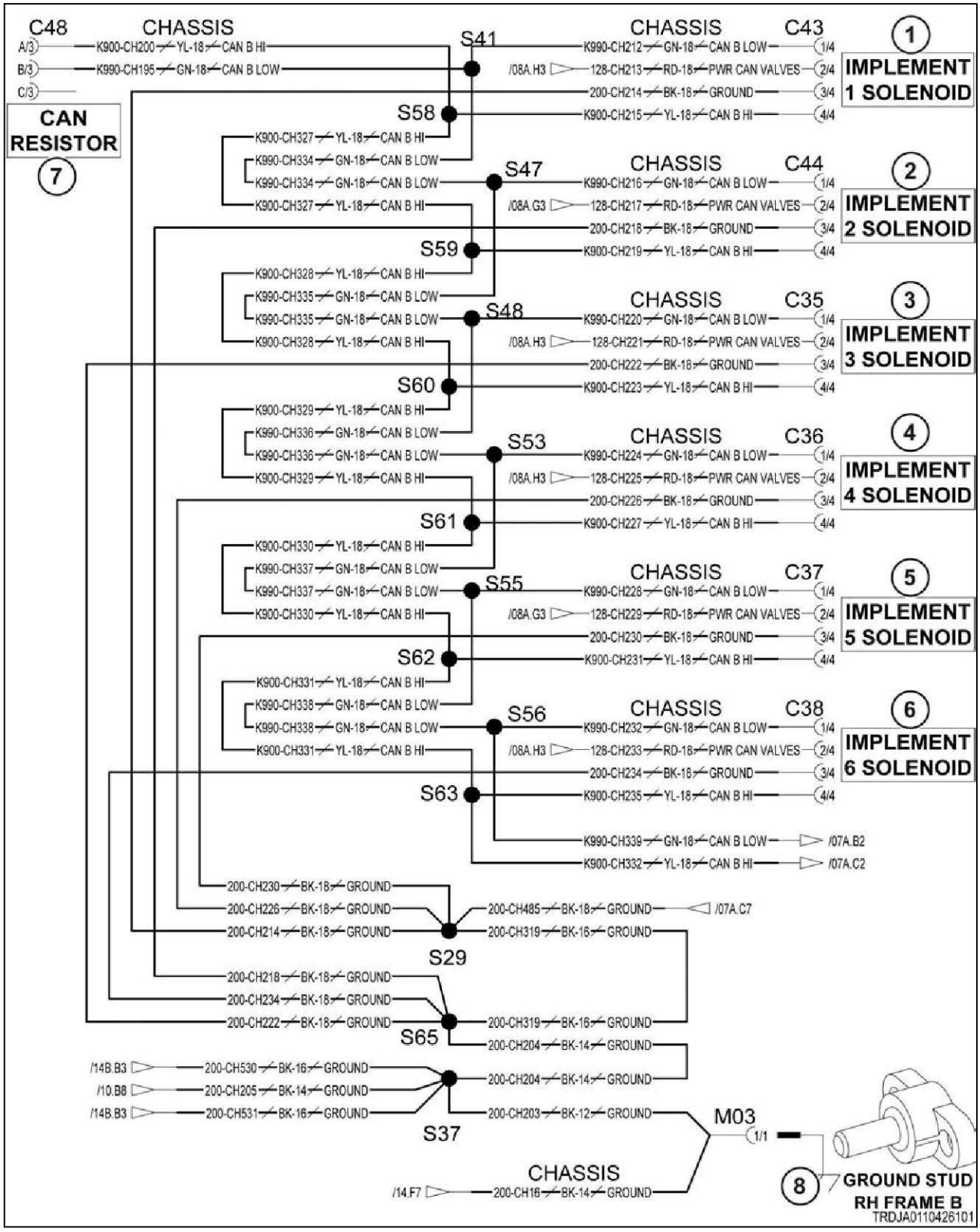
C48
CHASSIS
A/3
B/3
C/3
K900-CH200 YL-18 CAN B HI
K990-CH195 GN-18 CAN B LOW
CAN RESISTOR
7
S41
S58
S47
S59
S48
S60
S53
S61
S55
S62
S56
S63
S29
S65
S37
CHASSIS C43
K990-CH212 GN-18 CAN B LOW 1/4
/08A.H3 128-CH213 RD-18 PWR CAN VALVES 2/4
200-CH214 BK-18 GROUND 3/4
K900-CH215 YL-18 CAN B HI 4/4
1 IMPLEMENT 1 SOLENOID
CHASSIS C44
K990-CH216 GN-18 CAN B LOW 1/4
/08A.G3 128-CH217 RD-18 PWR CAN VALVES 2/4
200-CH218 BK-18 GROUND 3/4
K900-CH219 YL-18 CAN B HI 4/4
2 IMPLEMENT 2 SOLENOID
CHASSIS C35
K990-CH220 GN-18 CAN B LOW 1/4
/08A.H3 128-CH221 RD-18 PWR CAN VALVES 2/4
200-CH222 BK-18 GROUND 3/4
K900-CH223 YL-18 CAN B HI 4/4
3 IMPLEMENT 3 SOLENOID
CHASSIS C36
K990-CH224 GN-18 CAN B LOW 1/4
/08A.H3 128-CH225 RD-18 PWR CAN VALVES 2/4
200-CH226 BK-18 GROUND 3/4
K900-CH227 YL-18 CAN B HI 4/4
4 IMPLEMENT 4 SOLENOID
CHASSIS C37
K990-CH228 GN-18 CAN B LOW 1/4
/08A.G3 128-CH229 RD-18 PWR CAN VALVES 2/4
200-CH230 BK-18 GROUND 3/4
K900-CH231 YL-18 CAN B HI 4/4
5 IMPLEMENT 5 SOLENOID
CHASSIS C38
K990-CH232 GN-18 CAN B LOW 1/4
/08A.H3 128-CH233 RD-18 PWR CAN VALVES 2/4
200-CH234 BK-18 GROUND 3/4
K900-CH235 YL-18 CAN B HI 4/4
6 IMPLEMENT 6 SOLENOID
K990-CH339 GN-18 CAN B LOW /07A.B2
K900-CH332 YL-18 CAN B HI /07A.C2
K900-CH327 YL-18 CAN B HI
K990-CH334 GN-18 CAN B LOW
K990-CH334 GN-18 CAN B LOW
K900-CH327 YL-18 CAN B HI
K900-CH328 YL-18 CAN B HI
K990-CH335 GN-18 CAN B LOW
K990-CH335 GN-18 CAN B LOW
K900-CH328 YL-18 CAN B HI
K900-CH329 YL-18 CAN B HI
K990-CH336 GN-18 CAN B LOW
K990-CH336 GN-18 CAN B LOW
K900-CH329 YL-18 CAN B HI
K900-CH330 YL-18 CAN B HI
K990-CH337 GN-18 CAN B LOW
K990-CH337 GN-18 CAN B LOW
K900-CH330 YL-18 CAN B HI
K900-CH331 YL-18 CAN B HI
K990-CH338 GN-18 CAN B LOW
K990-CH338 GN-18 CAN B LOW
K900-CH331 YL-18 CAN B HI
200-CH230 BK-18 GROUND
200-CH226 BK-18 GROUND
200-CH214 BK-18 GROUND
200-CH485 BK-18 GROUND /07A.C7
200-CH319 BK-16 GROUND
200-CH218 BK-18 GROUND
200-CH234 BK-18 GROUND
200-CH222 BK-18 GROUND
200-CH319 BK-16 GROUND
200-CH204 BK-14 GROUND
/14B.B3 200-CH530 BK-16 GROUND
/10.B8 200-CH205 BK-14 GROUND
/14B.B3 200-CH531 BK-16 GROUND
200-CH204 BK-14 GROUND
200-CH203 BK-12 GROUND
M03
1/1
8
GROUND STUD RH FRAME B
CHASSIS
/14.F7 200-CH16 BK-14 GROUND
TRDJA0110426101

Fig. 667

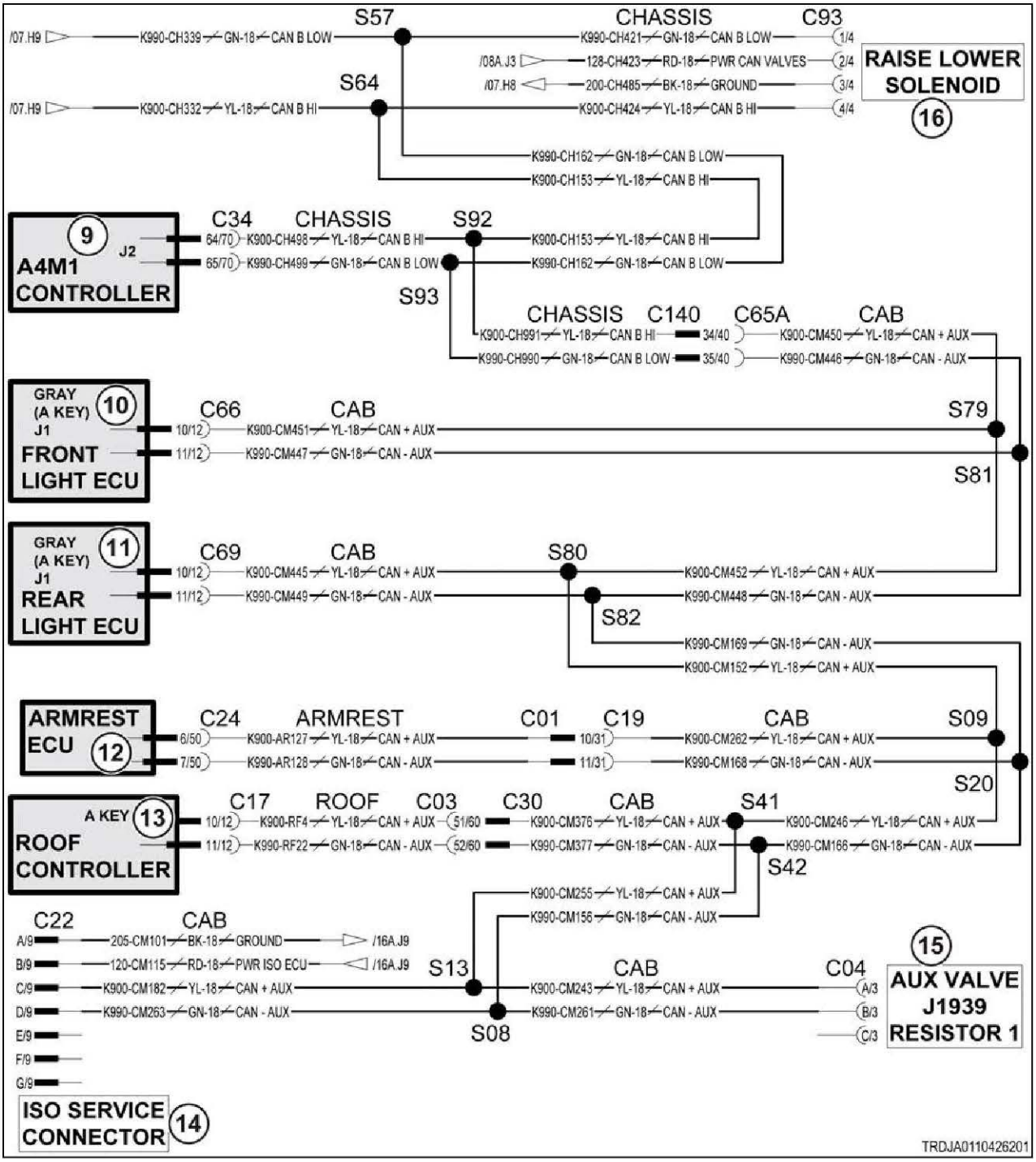

Fig. 668

Schematic legend		
Item	**Schematic term**	**Description**
1	IMPLEMENT 1 SOLENOID	Implement 1 solenoid
2	IMPLEMENT 2 SOLENOID	Implement 2 solenoid
3	IMPLEMENT 3 SOLENOID	Implement 3 solenoid
4	IMPLEMENT 4 SOLENOID	Implement 4 solenoid
5	IMPLEMENT 5 SOLENOID	Implement 5 solenoid
6	IMPLEMENT 6 SOLENOID	Implement 6 solenoid

Schematic legend		
Item	Schematic term	Description
7	CAN RESISTOR	Controller area network (CAN) terminator
8	GROUND STUD RH FRAME B	Ground stud right-hand frame B
9	A4M1 CONTROLLER	Transmission module
10	FRONT LIGHT ECU	Front lighting module
11	REAR LIGHT ECU	Rear lighting module
12	ARMREST ECU	Armrest module
13	ROOF CONTROLLER	Roof module
14	ISO SERVICE CONNECTOR	ISO service connector
15	AUX VALVE J1939 RESISTOR 1	Controller area network (CAN) terminator
16	RAISE LOWER SOLENOID	Raise/lower solenoid
--	CAN B LOW	Controller area network (CAN) B low
--	CAN B HI	Controller area network (CAN) B high
--	PWR CAN VALVES	Power controller area network (CAN) valves
--	CAN + AUX	Controller area network (CAN) high auxiliary
--	CAN - AUX	Controller area network (CAN) low auxiliary

10.13.4 Code SA 165 SPN 639 FMI 19

The Controller Area Network (CAN) is not communicating correctly. The conditions defined by the software were not met.

Diagnosis and solution

1. Make sure the part numbers are correct

a) Make sure the following information is correct.

- Auxiliary valve 5 module software part number
- Auxiliary valve 5 module part number

Result

Expected result - all part numbers are correct.

Results:

- Yes - all part numbers are correct.

  see step 2, page 10-1147
- No - one or more part number is not correct.

  Install the correct module and flash the correct software.

  see step 3, page 10-1148

2. Inspect the harness connections.

a) Turn the key start switch to the off position.
b) Turn the battery disconnect switch to the off position.
c) Remove the key from the battery disconnect switch.
d) Inspect all harness connections.

Result

Expected result - harness connections are good.

Results:

- Yes - harness connections are good.

  see step 3, page 10-1148
- No - harness connections are not good.

  Repair or replace the harness.

  see step 3, page 10-1148

3. Check for other diagnostic codes for this module.

a) Turn the key start switch to the off position.
b) Turn the battery disconnect switch to the off position.
c) Remove the key from the battery disconnect switch.
d) Connect the module using the controller area network (CAN) data link.
e) Turn the battery disconnect switch to the on position.
f) Turn the key start switch to the on position.
g) Check for active diagnostic codes for this module.

Result

Expected result - no diagnostic codes are active for this module.

Results:

- Yes - no diagnostic codes are active.

  Stop.
- No - diagnostic codes are active for this module.

  Failure of this module is possible but not common. Exit the procedure and troubleshoot the active codes. If the diagnostic code remains active, replace the module.

  Stop.

10.13.5 Code SA 165 SPN 701 FMI 05

Implement valve 5 proportional solenoid is disconnected.

Each implement valve has its own controller module, which operates the proportional and directional solenoids. Those solenoids are directly connected to the bottom of each control module. The likely cause for this error is a faulty solenoid.

Diagnosis and solution

1. Inspect the controller-to-solenoid connections.

a) Turn the key start switch to the off position.
b) Carefully release the controller from both solenoids.

   Each solenoid has a connector retainer. Both must be released to lift the controller away from the solenoids.
c) Clean and inspect the contacts on the controller and both solenoids.
d) Reinstall the controller and all electrical connectors.
e) Turn the key start switch to the on position.
f) Operate the implement valve.
g) Check if the diagnostic code persists.

Result

- The diagnostic code is not active.

  Stop.
- The diagnostic code is active.

  Continue to step 2 to isolate the problem.

2. Temporarily swap adjacent controllers to isolate the problem.

Note that the function will follow the controller. In the cab, auxiliary control lever 5 will still control the original controller at its new location, and the source address (SA) of the diagnostic code will also follow that module.

a) Turn the key start switch to the off position.
b) Number the controller modules for later identification.
c) Swap the controllers from the current valve and one of the other valves that is not reporting any errors.
d) Turn the key start switch to the on position.
e) Operate both implement valves.
f) Check for diagnostic codes.

Result

- The original diagnostic code is still reported.

  The valve controller is at fault.

  Replace the valve controller.

  See the hydraulics chapter in the service manual to properly program and set up the new controller.
- The source address (SA) of the diagnostic code changed to a different location.

  The original solenoid is at fault, and the temporary controller has detected the same error.

  Replace the proportional solenoid.

  See the hydraulics chapter in the service manual to properly set up the old controller for its new solenoid.

g) **Important:** Make sure to return the swapped controllers back to their original location.

3. Check if the diagnostic code remains.

a) Inspect and clean the harness connector contacts.
b) Connect all the connectors.
c) Turn the battery disconnect switch to the on position.
d) Turn the key start switch to the on position.
e) Operate the machine at low idle.
f) Check if the diagnostic code remains.

Result

- SA 165 SPN 701 FMI 05 is not active.

  Stop.
- SA 165 SPN 701 FMI 05 is active.

  Failure of the auxiliary valve module is possible but not common. Exit the procedure and do the procedure again. If the diagnostic code remains active, replace the module.

  Stop.

10.13.6 Code SA 165 SPN 701 FMI 06

Implement valve 5 proportional solenoid has excessive current.

Each implement valve has its own controller module, which operates the proportional and directional solenoids. Those solenoids are directly connected to the bottom of each control module. The likely cause for this error is a faulty solenoid.

Diagnosis and solution

1. Inspect the controller-to-solenoid connections.

a) Turn the key start switch to the off position.
b) Carefully release the controller from both solenoids.

   Each solenoid has a connector retainer. Both must be released to lift the controller away from the solenoids.
c) Clean and inspect the contacts on the controller and both solenoids.
d) Reinstall the controller and all electrical connectors.
e) Turn the key start switch to the on position.
f) Operate the implement valve.
g) Check if the diagnostic code persists.

Result

- The diagnostic code is not active.

  Stop.
- The diagnostic code is active.

  Continue to step 2 to isolate the problem.

2. Temporarily swap adjacent controllers to isolate the problem.

Note that the function will follow the controller. In the cab, auxiliary control lever 5 will still control the original controller at its new location, and the source address (SA) of the diagnostic code will also follow that module.

a) Turn the key start switch to the off position.
b) Number the controller modules for later identification.
c) Swap the controllers from the current valve and one of the other valves that is not reporting any errors.
d) Turn the key start switch to the on position.
e) Operate both implement valves.
f) Check for diagnostic codes.

Result

- The original diagnostic code is still reported.

  The valve controller is at fault.

  Replace the valve controller.

  See the hydraulics chapter in the service manual to properly program and set up the new controller.
- The source address (SA) of the diagnostic code changed to a different location.

  The original solenoid is at fault, and the temporary controller has detected the same error.

  Replace the proportional solenoid.

  See the hydraulics chapter in the service manual to properly set up the old controller for its new solenoid.

g) **Important:** Make sure to return the swapped controllers back to their original location.

3. Check if the diagnostic code remains.

a) Inspect and clean the harness connector contacts.
b) Connect all the connectors.
c) Turn the battery disconnect switch to the on position.
d) Turn the key start switch to the on position.
e) Operate the machine at low idle.
f) Check if the diagnostic code remains.

Result

- SA 165 SPN 701 FMI 06 is not active.

  Stop.
- SA 165 SPN 701 FMI 06 is active.

  Failure of the auxiliary valve module is possible but not common. Exit the procedure and do the procedure again. If the diagnostic code remains active, replace the module.

  Stop.

10.13.7 Code SA 165 SPN 702 FMI 05

Implement valve 5 directional solenoid is disconnected.

Each implement valve has its own controller module, which operates the proportional and directional solenoids. Those solenoids are directly connected to the bottom of each control module. The likely cause for this error is a faulty solenoid.

Diagnosis and solution

1. Inspect the controller-to-solenoid connections.

a) Turn the key start switch to the off position.

b) Carefully release the controller from both solenoids.

Each solenoid has a connector retainer. Both must be released to lift the controller away from the solenoids.

c) Clean and inspect the contacts on the controller and both solenoids.

d) Reinstall the controller and all electrical connectors.

e) Turn the key start switch to the on position.

f) Operate the implement valve.

g) Check if the diagnostic code persists.

Result

- The diagnostic code is not active.

  Stop.
- The diagnostic code is active.

  Continue to step 2 to isolate the problem.

2. Temporarily swap adjacent controllers to isolate the problem.

Note that the function will follow the controller. In the cab, auxiliary control lever 5 will still control the original controller at its new location, and the source address (SA) of the diagnostic code will also follow that module.

a) Turn the key start switch to the off position.

b) Number the controller modules for later identification.

c) Swap the controllers from the current valve and one of the other valves that is not reporting any errors.

d) Turn the key start switch to the on position.

e) Operate both implement valves.

f) Check for diagnostic codes.

Result

- The original diagnostic code is still reported.

  The valve controller is at fault.

  Replace the valve controller.

  See the hydraulics chapter in the service manual to properly program and set up the new controller.
- The source address (SA) of the diagnostic code changed to a different location.

  The original solenoid is at fault, and the temporary controller has detected the same error.

  Replace the directional solenoid.

  See the hydraulics chapter in the service manual to properly set up the old controller for its new solenoid.

g) **Important:** Make sure to return the swapped controllers back to their original location.

3. Check if the diagnostic code remains.

a) Inspect and clean the harness connector contacts.
b) Connect all the connectors.
c) Turn the battery disconnect switch to the on position.
d) Turn the key start switch to the on position.
e) Operate the machine at low idle.
f) Check if the diagnostic code remains.

Result

- SA 165 SPN 702 FMI 05 is not active.

  Stop.
- SA 165 SPN 702 FMI 05 is active.

  Failure of the auxiliary valve module is possible but not common. Exit the procedure and do the procedure again. If the diagnostic code remains active, replace the module.

  Stop.

10.13.8 Code SA 165 SPN 702 FMI 06

Implement valve 5 directional solenoid has excessive current.

Each implement valve has its own controller module, which operates the proportional and directional solenoids. Those solenoids are directly connected to the bottom of each control module. The likely cause for this error is a faulty solenoid.

Diagnosis and solution

1. Inspect the controller-to-solenoid connections.

a) Turn the key start switch to the off position.
b) Carefully release the controller from both solenoids.

   Each solenoid has a connector retainer. Both must be released to lift the controller away from the solenoids.
c) Clean and inspect the contacts on the controller and both solenoids.
d) Reinstall the controller and all electrical connectors.
e) Turn the key start switch to the on position.
f) Operate the implement valve.
g) Check if the diagnostic code persists.

Result

- The diagnostic code is not active.

  Stop.
- The diagnostic code is active.

  Continue to step 2 to isolate the problem.

2. Temporarily swap adjacent controllers to isolate the problem.

Note that the function will follow the controller. In the cab, auxiliary control lever 5 will still control the original controller at its new location, and the source address (SA) of the diagnostic code will also follow that module.

a) Turn the key start switch to the off position.
b) Number the controller modules for later identification.
c) Swap the controllers from the current valve and one of the other valves that is not reporting any errors.
d) Turn the key start switch to the on position.
e) Operate both implement valves.
f) Check for diagnostic codes.

Result

- The original diagnostic code is still reported.

  The valve controller is at fault.

  Replace the valve controller.

  See the hydraulics chapter in the service manual to properly program and set up the new controller.
- The source address (SA) of the diagnostic code changed to a different location.

  The original solenoid is at fault, and the temporary controller has detected the same error.

  Replace the directional solenoid.

  See the hydraulics chapter in the service manual to properly set up the old controller for its new solenoid.

g) **Important:** Make sure to return the swapped controllers back to their original location.

3. Check if the diagnostic code remains.

a) Inspect and clean the harness connector contacts.
b) Connect all the connectors.
c) Turn the battery disconnect switch to the on position.
d) Turn the key start switch to the on position.
e) Operate the machine at low idle.
f) Check if the diagnostic code remains.

Result

- SA 165 SPN 702 FMI 06 is not active.

  Stop.
- SA 165 SPN 702 FMI 06 is active.

  Failure of the auxiliary valve module is possible but not common. Exit the procedure and do the procedure again. If the diagnostic code remains active, replace the module.

  Stop.

10.14 166 Auxiliary valve 6 module

10.14.1 Code SA 166 SPN 158 FMI 00

Implement valve module 6 is reporting over-voltage.

The Implement valve controller module is reporting over-voltage in its supplied power. All Implement valves share the same 12-volt power circuit. Unless this error is also reported for all other Implement valve controllers, the reporting controller is faulty.

Diagnosis and solution

1. Check the voltage at the auxiliary valve module.

a) Turn the key start switch to the on position but do not start the engine.

b) Check the voltage between contacts 2 and 3 at the valve module connector.

Result

- The voltage is above 12 Volts.

  Troubleshoot the charging system.
- The voltage is at or near 12 volts.

  Replace the valve module.

  See step 2 to validate the repair.

2. Check if the diagnostic code remains.

a) Check and clean the harness connector contacts.

b) Connect all the connectors.

c) Turn the battery disconnect switch to the on position.

d) Turn the key start switch to the on position.

e) Operate the machine at low idle.

f) Check if the diagnostic code remains.

Result

- SA 166 SPN 158 FMI 00 is not active.

  Stop.
- SA 166 SPN 158 FMI 00 is active.

  Replace the valve module.

  Stop.

10.14.1.1 Auxiliary valves electrical schematic

Auxiliary valve assembly

Item	Description
1	Controller
2	Proportional solenoid
3	Directional solenoid

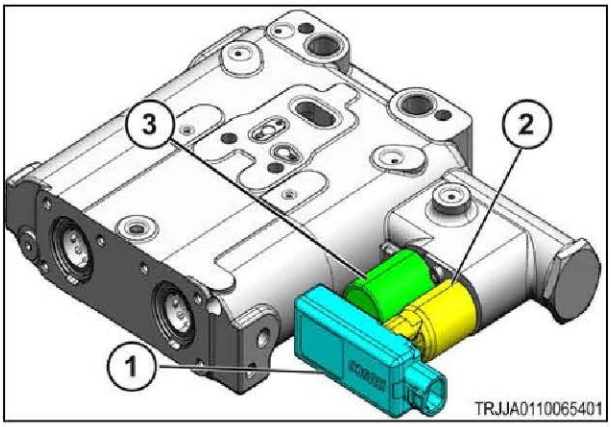

Fig. 669

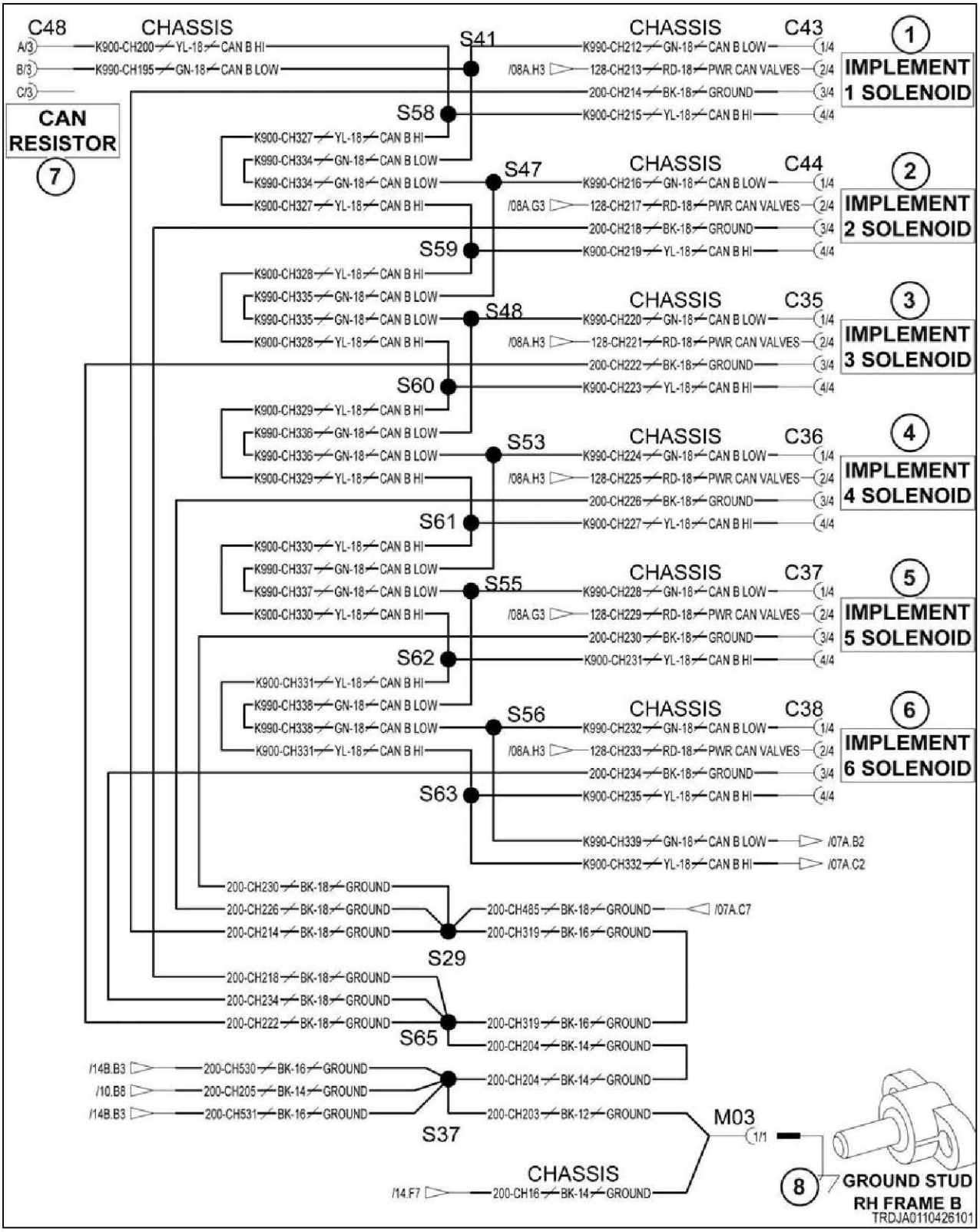
C48
CHASSIS
A/3
B/3
C/3
K900-CH200 YL-18 CAN B HI
K990-CH195 GN-18 CAN B LOW
CAN RESISTOR
7
S41
S58
S47
S59
S48
S60
S53
S61
S55
S62
S56
S63
S29
S65
S37
K900-CH327 YL-18 CAN B HI
K990-CH334 GN-18 CAN B LOW
K990-CH334 GN-18 CAN B LOW
K900-CH327 YL-18 CAN B HI
K900-CH328 YL-18 CAN B HI
K990-CH335 GN-18 CAN B LOW
K990-CH335 GN-18 CAN B LOW
K900-CH328 YL-18 CAN B HI
K900-CH329 YL-18 CAN B HI
K990-CH336 GN-18 CAN B LOW
K990-CH336 GN-18 CAN B LOW
K900-CH329 YL-18 CAN B HI
K900-CH330 YL-18 CAN B HI
K990-CH337 GN-18 CAN B LOW
K990-CH337 GN-18 CAN B LOW
K900-CH330 YL-18 CAN B HI
K900-CH331 YL-18 CAN B HI
K990-CH338 GN-18 CAN B LOW
K990-CH338 GN-18 CAN B LOW
K900-CH331 YL-18 CAN B HI
CHASSIS C43
K990-CH212 GN-18 CAN B LOW 1/4
/08A.H3 128-CH213 RD-18 PWR CAN VALVES 2/4
200-CH214 BK-18 GROUND 3/4
K900-CH215 YL-18 CAN B HI 4/4
1 IMPLEMENT 1 SOLENOID
CHASSIS C44
K990-CH216 GN-18 CAN B LOW 1/4
/08A.G3 128-CH217 RD-18 PWR CAN VALVES 2/4
200-CH218 BK-18 GROUND 3/4
K900-CH219 YL-18 CAN B HI 4/4
2 IMPLEMENT 2 SOLENOID
CHASSIS C35
K990-CH220 GN-18 CAN B LOW 1/4
/08A.H3 128-CH221 RD-18 PWR CAN VALVES 2/4
200-CH222 BK-18 GROUND 3/4
K900-CH223 YL-18 CAN B HI 4/4
3 IMPLEMENT 3 SOLENOID
CHASSIS C36
K990-CH224 GN-18 CAN B LOW 1/4
/08A.H3 128-CH225 RD-18 PWR CAN VALVES 2/4
200-CH226 BK-18 GROUND 3/4
K900-CH227 YL-18 CAN B HI 4/4
4 IMPLEMENT 4 SOLENOID
CHASSIS C37
K990-CH228 GN-18 CAN B LOW 1/4
/08A.G3 128-CH229 RD-18 PWR CAN VALVES 2/4
200-CH230 BK-18 GROUND 3/4
K900-CH231 YL-18 CAN B HI 4/4
5 IMPLEMENT 5 SOLENOID
CHASSIS C38
K990-CH232 GN-18 CAN B LOW 1/4
/08A.H3 128-CH233 RD-18 PWR CAN VALVES 2/4
200-CH234 BK-18 GROUND 3/4
K900-CH235 YL-18 CAN B HI 4/4
6 IMPLEMENT 6 SOLENOID
K990-CH339 GN-18 CAN B LOW /07A.B2
K900-CH332 YL-18 CAN B HI /07A.C2
200-CH230 BK-18 GROUND
200-CH226 BK-18 GROUND
200-CH214 BK-18 GROUND
200-CH485 BK-18 GROUND /07A.C7
200-CH319 BK-16 GROUND
200-CH218 BK-18 GROUND
200-CH234 BK-18 GROUND
200-CH222 BK-18 GROUND
200-CH319 BK-16 GROUND
200-CH204 BK-14 GROUND
/14B.B3 200-CH530 BK-16 GROUND
/10.B8 200-CH205 BK-14 GROUND
/14B.B3 200-CH531 BK-16 GROUND
200-CH204 BK-14 GROUND
200-CH203 BK-12 GROUND
M03
1/1
CHASSIS
/14.F7 200-CH16 BK-14 GROUND
8
GROUND STUD
RH FRAME B
TRDJA0110426101

Fig. 670

Schematic legend		
Item	**Schematic term**	**Description**
1	IMPLEMENT 1 SOLENOID	Implement 1 solenoid
2	IMPLEMENT 2 SOLENOID	Implement 2 solenoid
3	IMPLEMENT 3 SOLENOID	Implement 3 solenoid
4	IMPLEMENT 4 SOLENOID	Implement 4 solenoid
5	IMPLEMENT 5 SOLENOID	Implement 5 solenoid
6	IMPLEMENT 6 SOLENOID	Implement 6 solenoid
7	CAN RESISTOR	Controller area network (CAN) resistor
8	GROUND STUD RH FRAME B	Ground stud right-hand frame B
--	CAN B LOW	Controller area network (CAN) B low
--	CAN B HI	Controller area network (CAN) B high
--	PWR CAN VALVES	Power controller area network (CAN) valves
--	CAN + AUX	Controller area network (CAN) high auxiliary
--	CAN - AUX	Controller area network (CAN) low auxiliary

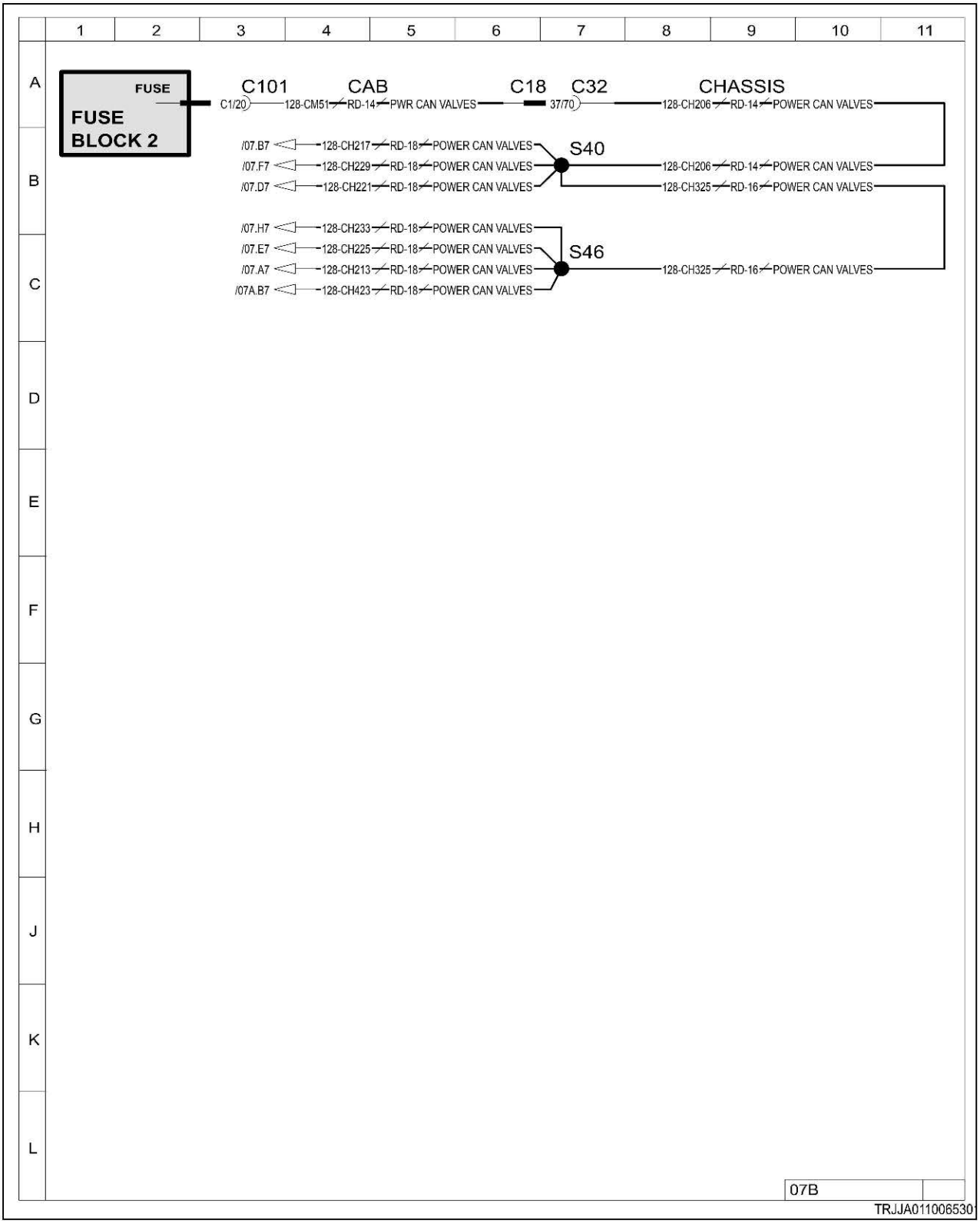

Fig. 671

10.14.2 Code SA 166 SPN 158 FMI 18

Implement valve module 6 is reporting under-voltage.

The implement valve controller module is reporting under-voltage in its supplied power. All implement valves share the same 12-volt power circuit. Unless this error is also reported for all other implement valve controllers, the fault likely lies at or near the reporting valve controller.

Diagnosis and solution

1. Check the voltage at the implement valve module.

a) Turn the key start switch to the on position but do not start the engine.

b) Check the voltage between contacts 2 and 3 at the valve module connector.

Result

- The voltage is at or near 12 volts.

  Replace the valve module.

  See step 3 to validate the repair.
- The voltage is below 12 Volts.

  Continue.

c) Check the voltage between contacts 2 and 3 of a nearby implement valve module connector, which is not reporting this same error.

Result

- All valves are reporting this same error.

  See step 2 to trace power and ground circuits.
- The voltage at this adjacent module is at or near 12 Volts.

  The fault in power is local to the valve module(s) that are reporting the error.

  Repair or replace the harness at the affected valve module(s).

  See step 3 to validate the repair.

2. Isolate the source of the voltage drop.

a) Check the voltage between fuse block 2, fuse 1 and chassis ground.

Result

- The voltage is below 12 volts.

  Inspect the fuse socket and fuse for corrosion.

  See step 3 to validate the repair.
- The voltage is at or near 12 Volts.

  Continue.

b) Check the voltage between contact 37 and chassis ground at the cab harness to chassis harness connector (C18 & C32).

Result

- The voltage is below 12 volts.

  Repair or replace the cab harness.

  See step 3 to validate the repair.
- The voltage is at or near 12 Volts.

  Repair or replace the chassis harness.

  See step 3 to validate the repair.

3. Check if the diagnostic code remains.

a) Inspect and clean the harness connector contacts.

b) Connect all the connectors.

c) Turn the battery disconnect switch to the on position.

d) Turn the key start switch to the on position.

e) Operate the machine at low idle.

f) Check if the diagnostic code remains.

Result

- SA 166 SPN 158 FMI 18 is not active.

  Stop.
- SA 166 SPN 158 FMI 18 is active.

  If the diagnostic code remains active, replace the valve module.

  Stop.

10.14.2.1 Auxiliary valves electrical schematic

Auxiliary valve assembly

Item	Description
1	Controller
2	Proportional solenoid
3	Directional solenoid

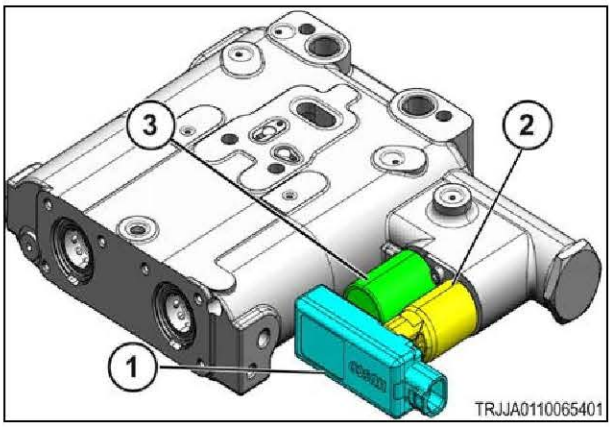

Fig. 672

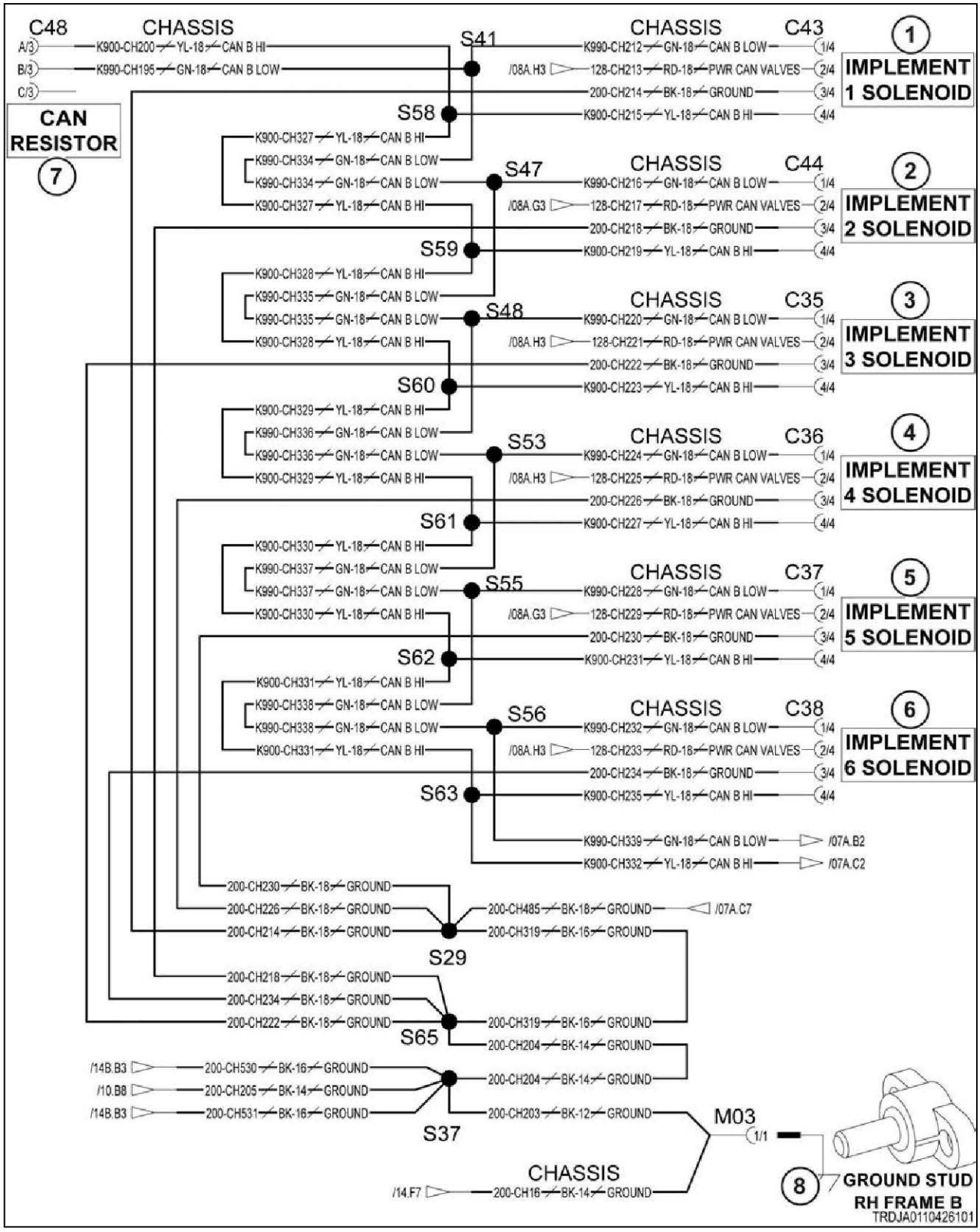
C48
CHASSIS
A/3
B/3
C/3
K900-CH200 YL-18 CAN B HI
K990-CH195 GN-18 CAN B LOW
CAN RESISTOR
7
S41
S58
S47
S59
S48
S60
S53
S61
S55
S62
S56
S63
CHASSIS C43
K990-CH212 GN-18 CAN B LOW 1/4
/08A.H3 128-CH213 RD-18 PWR CAN VALVES 2/4
200-CH214 BK-18 GROUND 3/4
K900-CH215 YL-18 CAN B HI 4/4
1 IMPLEMENT 1 SOLENOID
CHASSIS C44
K990-CH216 GN-18 CAN B LOW 1/4
/08A.G3 128-CH217 RD-18 PWR CAN VALVES 2/4
200-CH218 BK-18 GROUND 3/4
K900-CH219 YL-18 CAN B HI 4/4
2 IMPLEMENT 2 SOLENOID
CHASSIS C35
K990-CH220 GN-18 CAN B LOW 1/4
/08A.H3 128-CH221 RD-18 PWR CAN VALVES 2/4
200-CH222 BK-18 GROUND 3/4
K900-CH223 YL-18 CAN B HI 4/4
3 IMPLEMENT 3 SOLENOID
CHASSIS C36
K990-CH224 GN-18 CAN B LOW 1/4
/08A.H3 128-CH225 RD-18 PWR CAN VALVES 2/4
200-CH226 BK-18 GROUND 3/4
K900-CH227 YL-18 CAN B HI 4/4
4 IMPLEMENT 4 SOLENOID
CHASSIS C37
K990-CH228 GN-18 CAN B LOW 1/4
/08A.G3 128-CH229 RD-18 PWR CAN VALVES 2/4
200-CH230 BK-18 GROUND 3/4
K900-CH231 YL-18 CAN B HI 4/4
5 IMPLEMENT 5 SOLENOID
CHASSIS C38
K990-CH232 GN-18 CAN B LOW 1/4
/08A.H3 128-CH233 RD-18 PWR CAN VALVES 2/4
200-CH234 BK-18 GROUND 3/4
K900-CH235 YL-18 CAN B HI 4/4
6 IMPLEMENT 6 SOLENOID
K990-CH339 GN-18 CAN B LOW /07A.B2
K900-CH332 YL-18 CAN B HI /07A.C2
K900-CH327 YL-18 CAN B HI
K990-CH334 GN-18 CAN B LOW
K990-CH334 GN-18 CAN B LOW
K900-CH327 YL-18 CAN B HI
K900-CH328 YL-18 CAN B HI
K990-CH335 GN-18 CAN B LOW
K990-CH335 GN-18 CAN B LOW
K900-CH328 YL-18 CAN B HI
K900-CH329 YL-18 CAN B HI
K990-CH336 GN-18 CAN B LOW
K990-CH336 GN-18 CAN B LOW
K900-CH329 YL-18 CAN B HI
K900-CH330 YL-18 CAN B HI
K990-CH337 GN-18 CAN B LOW
K990-CH337 GN-18 CAN B LOW
K900-CH330 YL-18 CAN B HI
K900-CH331 YL-18 CAN B HI
K990-CH338 GN-18 CAN B LOW
K990-CH338 GN-18 CAN B LOW
K900-CH331 YL-18 CAN B HI
200-CH230 BK-18 GROUND
200-CH226 BK-18 GROUND
200-CH214 BK-18 GROUND
200-CH485 BK-18 GROUND /07A.C7
200-CH319 BK-16 GROUND
S29
200-CH218 BK-18 GROUND
200-CH234 BK-18 GROUND
200-CH222 BK-18 GROUND
200-CH319 BK-16 GROUND
S65
200-CH204 BK-14 GROUND
/14B.B3 200-CH530 BK-16 GROUND
/10.B8 200-CH205 BK-14 GROUND
/14B.B3 200-CH531 BK-16 GROUND
200-CH204 BK-14 GROUND
200-CH203 BK-12 GROUND
S37
M03
1/1
8
GROUND STUD RH FRAME B
CHASSIS
/14.F7 200-CH16 BK-14 GROUND
TRDJA0110426101

Fig. 673

Schematic legend		
Item	**Schematic term**	**Description**
1	IMPLEMENT 1 SOLENOID	Implement 1 solenoid
2	IMPLEMENT 2 SOLENOID	Implement 2 solenoid
3	IMPLEMENT 3 SOLENOID	Implement 3 solenoid
4	IMPLEMENT 4 SOLENOID	Implement 4 solenoid
5	IMPLEMENT 5 SOLENOID	Implement 5 solenoid
6	IMPLEMENT 6 SOLENOID	Implement 6 solenoid
7	CAN RESISTOR	Controller area network (CAN) resistor
8	GROUND STUD RH FRAME B	Ground stud right-hand frame B
--	CAN B LOW	Controller area network (CAN) B low
--	CAN B HI	Controller area network (CAN) B high
--	PWR CAN VALVES	Power controller area network (CAN) valves
--	CAN + AUX	Controller area network (CAN) high auxiliary
--	CAN - AUX	Controller area network (CAN) low auxiliary

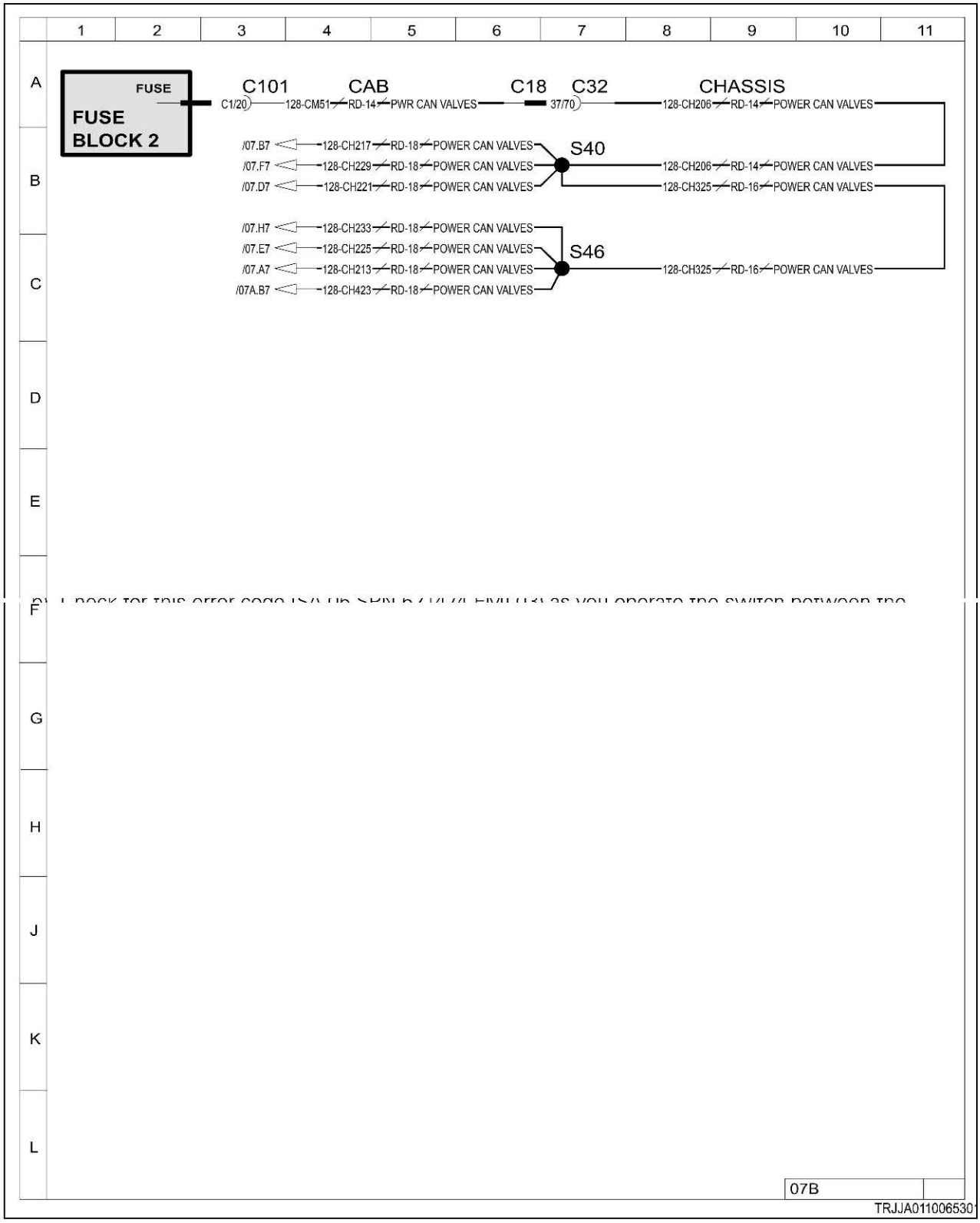

Fig. 674

10.14.3 Code SA 166 SPN 628 FMI 12

Implement valve 6 program memory - malfunction.

Each implement valve has its own controller module, which operates the proportional and directional solenoids. Those solenoids are directly connected to the bottom of each control module. The likely cause for this error is a faulty valve control module.

Diagnosis and solution

1. Reset the module.

a) Turn the key start switch to the off position.
b) Wait 60 seconds.
c) Turn the key start switch to the on position.
d) Check for the fault code.

Result

- The fault code is not active.

  Stop.
- The fault code is active.

  Replace the valve controller.

  See the hydraulics chapter in the service manual to properly program and set up the new controller.

2. Check if the fault code remains.

a) Inspect and clean the harness connector contacts.
b) Connect all the connectors.
c) Turn the battery disconnect switch to the on position.
d) Turn the key start switch to the on position.
e) Operate the machine at low idle.
f) Check for the fault code.

Result

- The fault code is not active.

  Stop.
- The fault code is active.

  Exit the procedure and do the procedure again.

  Stop.

10.14.3.1 CAN 2 electrical schematic

Auxiliary valve assembly

Item	Description
1	Controller
2	Proportional solenoid
3	Directional solenoid

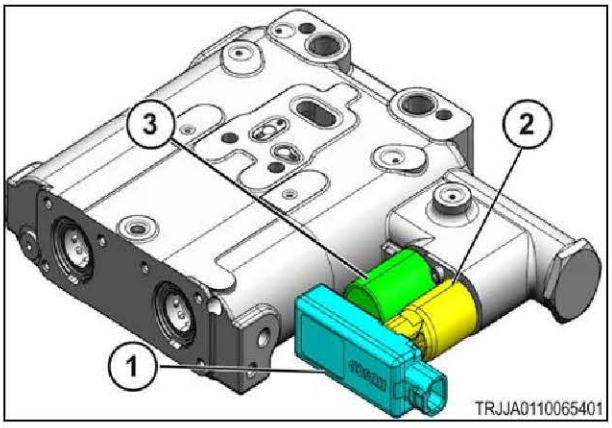

Fig. 675

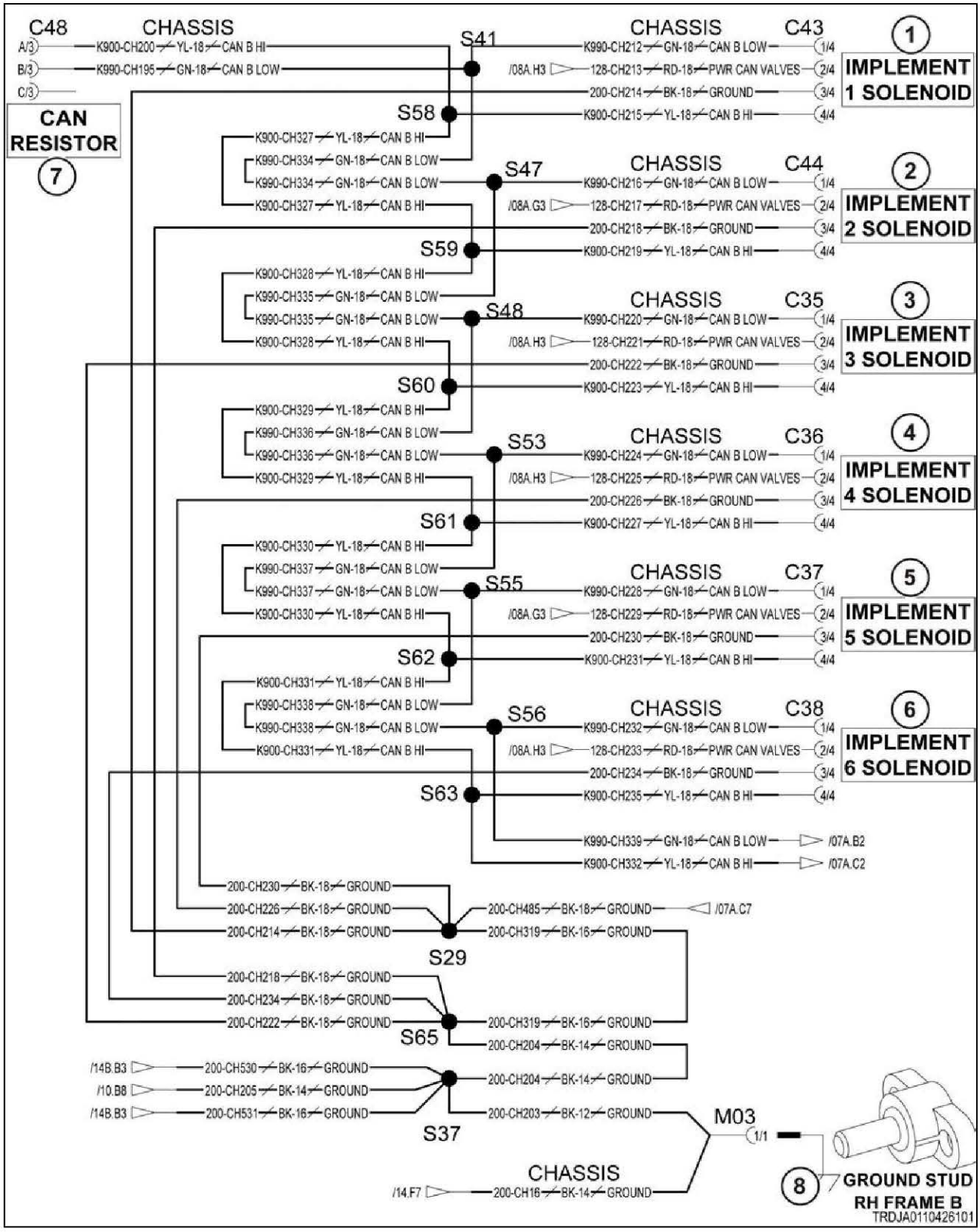
C48
CHASSIS
A/3
B/3
C/3
K900-CH200 YL-18 CAN B HI
K990-CH195 GN-18 CAN B LOW
CAN RESISTOR
7
S41
S58
S47
S59
S48
S60
S53
S61
S55
S62
S56
S63
CHASSIS C43
K990-CH212 GN-18 CAN B LOW 1/4
/08A.H3 128-CH213 RD-18 PWR CAN VALVES 2/4
200-CH214 BK-18 GROUND 3/4
K900-CH215 YL-18 CAN B HI 4/4
1 IMPLEMENT 1 SOLENOID
CHASSIS C44
K990-CH216 GN-18 CAN B LOW 1/4
/08A.G3 128-CH217 RD-18 PWR CAN VALVES 2/4
200-CH218 BK-18 GROUND 3/4
K900-CH219 YL-18 CAN B HI 4/4
2 IMPLEMENT 2 SOLENOID
CHASSIS C35
K990-CH220 GN-18 CAN B LOW 1/4
/08A.H3 128-CH221 RD-18 PWR CAN VALVES 2/4
200-CH222 BK-18 GROUND 3/4
K900-CH223 YL-18 CAN B HI 4/4
3 IMPLEMENT 3 SOLENOID
CHASSIS C36
K990-CH224 GN-18 CAN B LOW 1/4
/08A.H3 128-CH225 RD-18 PWR CAN VALVES 2/4
200-CH226 BK-18 GROUND 3/4
K900-CH227 YL-18 CAN B HI 4/4
4 IMPLEMENT 4 SOLENOID
CHASSIS C37
K990-CH228 GN-18 CAN B LOW 1/4
/08A.G3 128-CH229 RD-18 PWR CAN VALVES 2/4
200-CH230 BK-18 GROUND 3/4
K900-CH231 YL-18 CAN B HI 4/4
5 IMPLEMENT 5 SOLENOID
CHASSIS C38
K990-CH232 GN-18 CAN B LOW 1/4
/08A.H3 128-CH233 RD-18 PWR CAN VALVES 2/4
200-CH234 BK-18 GROUND 3/4
K900-CH235 YL-18 CAN B HI 4/4
6 IMPLEMENT 6 SOLENOID
K990-CH339 GN-18 CAN B LOW /07A.B2
K900-CH332 YL-18 CAN B HI /07A.C2
K900-CH327 YL-18 CAN B HI
K990-CH334 GN-18 CAN B LOW
K990-CH334 GN-18 CAN B LOW
K900-CH327 YL-18 CAN B HI
K900-CH328 YL-18 CAN B HI
K990-CH335 GN-18 CAN B LOW
K990-CH335 GN-18 CAN B LOW
K900-CH328 YL-18 CAN B HI
K900-CH329 YL-18 CAN B HI
K990-CH336 GN-18 CAN B LOW
K990-CH336 GN-18 CAN B LOW
K900-CH329 YL-18 CAN B HI
K900-CH330 YL-18 CAN B HI
K990-CH337 GN-18 CAN B LOW
K990-CH337 GN-18 CAN B LOW
K900-CH330 YL-18 CAN B HI
K900-CH331 YL-18 CAN B HI
K990-CH338 GN-18 CAN B LOW
K990-CH338 GN-18 CAN B LOW
K900-CH331 YL-18 CAN B HI
200-CH230 BK-18 GROUND
200-CH226 BK-18 GROUND
200-CH214 BK-18 GROUND
200-CH485 BK-18 GROUND /07A.C7
200-CH319 BK-16 GROUND
S29
200-CH218 BK-18 GROUND
200-CH234 BK-18 GROUND
200-CH222 BK-18 GROUND
200-CH319 BK-16 GROUND
S65
200-CH204 BK-14 GROUND
/14B.B3 200-CH530 BK-16 GROUND
/10.B8 200-CH205 BK-14 GROUND
/14B.B3 200-CH531 BK-16 GROUND
200-CH204 BK-14 GROUND
200-CH203 BK-12 GROUND
S37
M03
1/1
8
GROUND STUD RH FRAME B
CHASSIS
/14.F7 200-CH16 BK-14 GROUND
TRDJA0110426101

Fig. 676

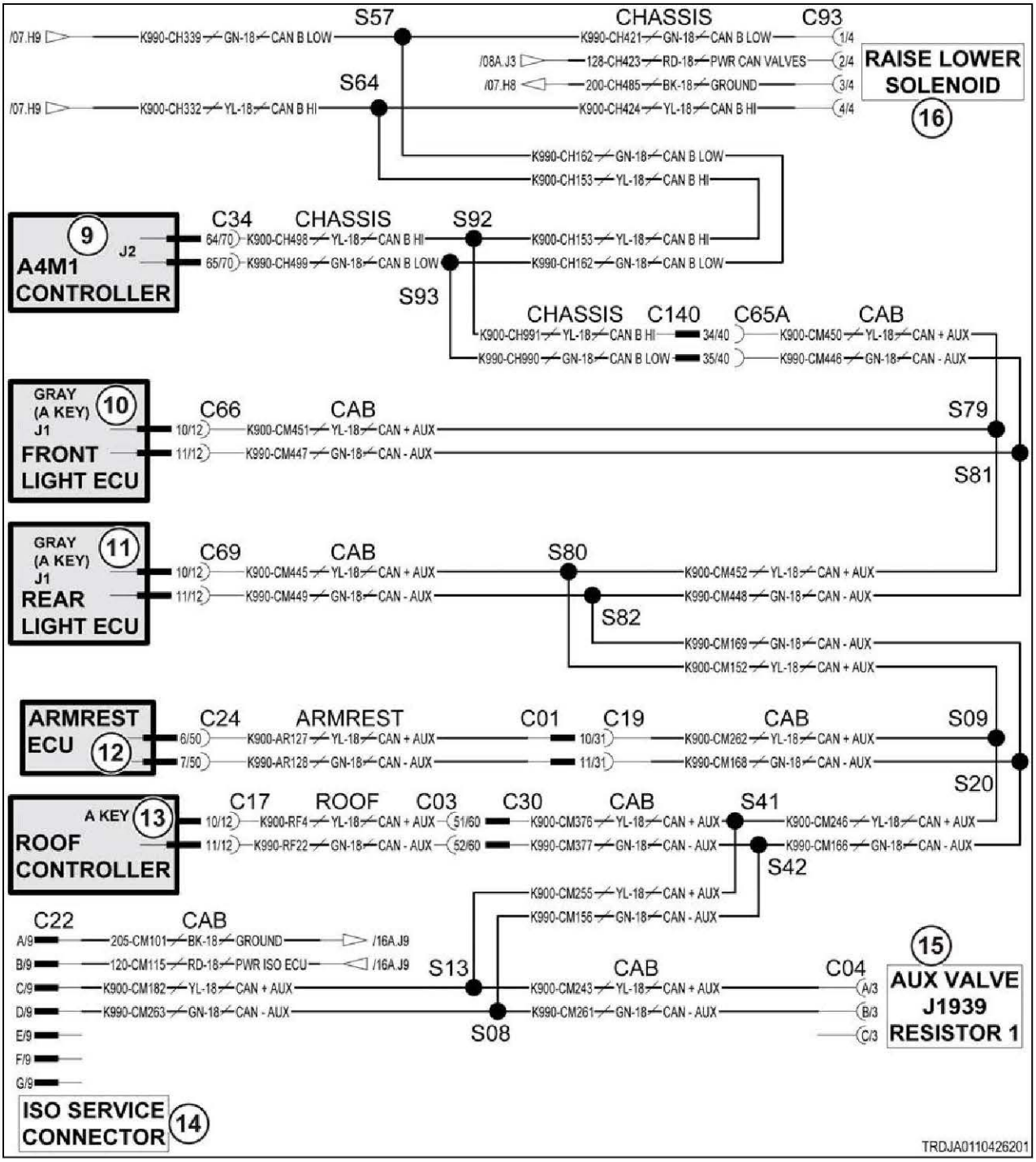

Fig. 677

Schematic legend		
Item	**Schematic term**	**Description**
1	IMPLEMENT 1 SOLENOID	Implement 1 solenoid
2	IMPLEMENT 2 SOLENOID	Implement 2 solenoid
3	IMPLEMENT 3 SOLENOID	Implement 3 solenoid
4	IMPLEMENT 4 SOLENOID	Implement 4 solenoid
5	IMPLEMENT 5 SOLENOID	Implement 5 solenoid
6	IMPLEMENT 6 SOLENOID	Implement 6 solenoid

Schematic legend		
Item	Schematic term	Description
7	CAN RESISTOR	Controller area network (CAN) terminator
8	GROUND STUD RH FRAME B	Ground stud right-hand frame B
9	A4M1 CONTROLLER	Transmission module
10	FRONT LIGHT ECU	Front lighting module
11	REAR LIGHT ECU	Rear lighting module
12	ARMREST ECU	Armrest module
13	ROOF CONTROLLER	Roof module
14	ISO SERVICE CONNECTOR	ISO service connector
15	AUX VALVE J1939 RESISTOR 1	Controller area network (CAN) terminator
16	RAISE LOWER SOLENOID	Raise/lower solenoid
--	CAN B LOW	Controller area network (CAN) B low
--	CAN B HI	Controller area network (CAN) B high
--	PWR CAN VALVES	Power controller area network (CAN) valves
--	CAN + AUX	Controller area network (CAN) high auxiliary
--	CAN - AUX	Controller area network (CAN) low auxiliary

10.14.4 Code SA 166 SPN 639 FMI 19

The Controller Area Network (CAN) is not communicating correctly. The conditions defined by the software were not met.

Diagnosis and solution

1. Make sure the part numbers are correct

- Auxiliary valve 6 module software part number
- Auxiliary valve 6 module part number

Result

Expected result - all part numbers are correct.

Results:

- Yes - all part numbers are correct.

  see step 2, page 10-1167
- No - one or more part number is not correct.

  Install the correct module and flash the correct software.

  see step 3, page 10-1168

2. Check the harness connections.

a) Turn the key start switch to the off position.
b) Turn the battery disconnect switch to the off position.
c) Remove the key from the battery disconnect switch.
d) Inspect all harness connections.

Result

Expected result - harness connections are good.

Results:

- Yes - harness connections are good.

  see step 3, page 10-1168
- No - harness connections are not good.

  Repair or replace the harness.

  see step 3, page 10-1168

3. Check for other diagnostic codes for this module.

a) Turn the key start switch to the off position.
b) Turn the battery disconnect switch to the off position.
c) Remove the key from the battery disconnect switch.
d) Connect the module using the controller area network (CAN) data link.
e) Turn the battery disconnect switch to the on position.
f) Turn the key start switch to the on position.
g) Check for active diagnostic codes for this module.

Result

Expected result - no diagnostic codes are active for this module.

Results:

- Yes - no diagnostic codes are active.

  Stop.
- No - diagnostic codes are active for this module.

  Failure of this module is possible but not common. Exit the procedure and troubleshoot the active codes. If the diagnostic code remains active, replace the module.

  Stop.

10.14.5 Code SA 166 SPN 701 FMI 05

Implement valve 6 proportional solenoid is disconnected.

Each implement valve has its own controller module, which operates the proportional and directional solenoids. Those solenoids are directly connected to the bottom of each control module. The likely cause for this error is a faulty solenoid.

Diagnosis and solution

1. Inspect the controller-to-solenoid connections.

a) Turn the key start switch to the off position.
b) Carefully release the controller from both solenoids.

   Each solenoid has a connector retainer. Both must be released to lift the controller away from the solenoids.
c) Clean and inspect the contacts on the controller and both solenoids.
d) Reinstall the controller and all electrical connectors.
e) Turn the key start switch to the on position.
f) Operate the implement valve.
g) Check if the diagnostic code persists.

Result

- The diagnostic code is not active.

  Stop.
- The diagnostic code is active.

  Continue to step 2 to isolate the problem.

2. Temporarily swap adjacent controllers to isolate the problem.

Note that the function will follow the controller. In the cab, auxiliary control lever 6 will still control the original controller at its new location, and the source address (SA) of the diagnostic code will also follow that module.

a) Turn the key start switch to the off position.
b) Number the controller modules for later identification.
c) Swap the controllers from the current valve and one of the other valves that is not reporting any errors.
d) Turn the key start switch to the on position.
e) Operate both implement valves.
f) Check for diagnostic codes.

Result

- The original diagnostic code is still reported.

  The valve controller is at fault.

  Replace the valve controller.

  See the hydraulics chapter in the service manual to properly program and set up the new controller.
- The source address (SA) of the diagnostic code changed to a different location.

  The original solenoid is at fault, and the temporary controller has detected the same error.

  Replace the proportional solenoid.

  See the hydraulics chapter in the service manual to properly set up the old controller for its new solenoid.

g) **Important**: Make sure to return the swapped controllers back to their original location.

3. Check if the diagnostic code remains.
a) Inspect and clean the harness connector contacts.
b) Connect all the connectors.
c) Turn the battery disconnect switch to the on position.
d) Turn the key start switch to the on position.
e) Operate the machine at low idle.
f) Check if the diagnostic code remains.

Result

- SA 166 SPN 701 FMI 05 is not active.

  Stop.
- SA 166 SPN 701 FMI 05 is active.

  Failure of the auxiliary valve module is possible but not common. Exit the procedure and do the procedure again. If the diagnostic code remains active, replace the module.

  Stop.

10.14.6 Code SA 166 SPN 701 FMI 06

Implement valve 6 proportional solenoid has excessive current.

Each implement valve has its own controller module, which operates the proportional and directional solenoids. Those solenoids are directly connected to the bottom of each control module. The likely cause for this error is a faulty solenoid.

Diagnosis and solution

1. Inspect the controller-to-solenoid connections.
a) Turn the key start switch to the off position.
b) Carefully release the controller from both solenoids.

Each solenoid has a connector retainer. Both must be released to lift the controller away from the solenoids.

c) Clean and inspect the contacts on the controller and both solenoids.
d) Reinstall the controller and all electrical connectors.
e) Turn the key start switch to the on position.
f) Operate the implement valve.
g) Check if the diagnostic code persists.

Result

- The diagnostic code is not active.

  Stop.
- The diagnostic code is active.

  Continue to step 2 to isolate the problem.

2. Temporarily swap adjacent controllers to isolate the problem.

Note that the function will follow the controller. In the cab, auxiliary control lever 6 will still control the original controller at its new location, and the source address (SA) of the diagnostic code will also follow that module.

a) Turn the key start switch to the off position.
b) Number the controller modules for later identification.
c) Swap the controllers from the current valve and one of the other valves that is not reporting any errors.
d) Turn the key start switch to the on position.
e) Operate both implement valves.
f) Check for diagnostic codes.

Result

- The original diagnostic code is still reported.

  The valve controller is at fault.

  Replace the valve controller.

  See the hydraulics chapter in the service manual to properly program and set up the new controller.
- The source address (SA) of the diagnostic code changed to a different location.

  The original solenoid is at fault, and the temporary controller has detected the same error.

  Replace the proportional solenoid.

  See the hydraulics chapter in the service manual to properly set up the old controller for its new solenoid.

g) **Important:** Make sure to return the swapped controllers back to their original location.

3. Check if the diagnostic code remains.

a) Inspect and clean the harness connector contacts.
b) Connect all the connectors.
c) Turn the battery disconnect switch to the on position.
d) Turn the key start switch to the on position.
e) Operate the machine at low idle.
f) Check if the diagnostic code remains.

Result

- SA 166 SPN 701 FMI 06 is not active.

  Stop.

- SA 166 SPN 701 FMI 06 is active.

  Failure of the auxiliary valve module is possible but not common. Exit the procedure and do the procedure again. If the diagnostic code remains active, replace the module.

  Stop.

10.14.7 Code SA 166 SPN 702 FMI 05

Implement valve 6 directional solenoid is disconnected.

Each implement valve has its own controller module, which operates the proportional and directional solenoids. Those solenoids are directly connected to the bottom of each control module. The likely cause for this error is a faulty solenoid.

Diagnosis and solution

1. Inspect the controller-to-solenoid connections.
   a) Turn the key start switch to the off position.
   b) Carefully release the controller from both solenoids.

      Each solenoid has a connector retainer. Both must be released to lift the controller away from the solenoids.
   c) Clean and inspect the contacts on the controller and both solenoids.
   d) Reinstall the controller and all electrical connectors.
   e) Turn the key start switch to the on position.
   f) Operate the implement valve.
   g) Check if the diagnostic code persists.

   Result

   - The diagnostic code is not active.

     Stop.
   - The diagnostic code is active.

     Continue to step 2 to isolate the problem.

2. Temporarily swap adjacent controllers to isolate the problem.

   Note that the function will follow the controller. In the cab, auxiliary control lever 6 will still control the original controller at its new location, and the source address (SA) of the diagnostic code will also follow that module.
   a) Turn the key start switch to the off position.
   b) Number the controller modules for later identification.
   c) Swap the controllers from the current valve and one of the other valves that is not reporting any errors.
   d) Turn the key start switch to the on position.
   e) Operate both implement valves.
   f) Check for diagnostic codes.

   Result

   - The original diagnostic code is still reported.

     The valve controller is at fault.

     Replace the valve controller.

     See the hydraulics chapter in the service manual to properly program and set up the new controller.

- The source address (SA) of the diagnostic code changed to a different location.

  The original solenoid is at fault, and the temporary controller has detected the same error.

  Replace the directional solenoid.

  See the hydraulics chapter in the service manual to properly set up the old controller for its new solenoid.

g) **Important:** Make sure to return the swapped controllers back to their original location.

3. Check if the diagnostic code remains.

a) Inspect and clean the harness connector contacts.
b) Connect all the connectors.
c) Turn the battery disconnect switch to the on position.
d) Turn the key start switch to the on position.
e) Operate the machine at low idle.
f) Check if the diagnostic code remains.

Result

- SA 166 SPN 702 FMI 05 is not active.

  Stop.
- SA 166 SPN 702 FMI 05 is active.

  Failure of the auxiliary valve module is possible but not common. Exit the procedure and do the procedure again. If the diagnostic code remains active, replace the module.

  Stop.

10.14.8 Code SA 166 SPN 702 FMI 06

Implement valve 6 directional solenoid has excessive current.

Each implement valve has its own controller module, which operates the proportional and directional solenoids. Those solenoids are directly connected to the bottom of each control module. The likely cause for this error is a faulty solenoid.

Diagnosis and solution

1. Inspect the controller-to-solenoid connections.

a) Turn the key start switch to the off position.
b) Carefully release the controller from both solenoids.

   Each solenoid has a connector retainer. Both must be released to lift the controller away from the solenoids.
c) Clean and inspect the contacts on the controller and both solenoids.
d) Reinstall the controller and all electrical connectors.
e) Turn the key start switch to the on position.
f) Operate the implement valve.
g) Check if the diagnostic code persists.

Result

- The diagnostic code is not active.

  Stop.
- The diagnostic code is active.

  Continue to step 2 to isolate the problem.

2. Temporarily swap adjacent controllers to isolate the problem.

Note that the function will follow the controller. In the cab, auxiliary control lever 6 will still control the original controller at its new location, and the source address (SA) of the diagnostic code will also follow that module.

a) Turn the key start switch to the off position.
b) Number the controller modules for later identification.
c) Swap the controllers from the current valve and one of the other valves that is not reporting any errors.
d) Turn the key start switch to the on position.
e) Operate both implement valves.
f) Check for diagnostic codes.

Result

- The original diagnostic code is still reported.

  The valve controller is at fault.

  Replace the valve controller.

  See the hydraulics chapter in the service manual to properly program and set up the new controller.
- The source address (SA) of the diagnostic code changed to a different location.

  The original solenoid is at fault, and the temporary controller has detected the same error.

  Replace the directional solenoid.

  See the hydraulics chapter in the service manual to properly set up the old controller for its new solenoid.

g) **Important**: Make sure to return the swapped controllers back to their original location.

3. Check if the diagnostic code remains.

a) Inspect and clean the harness connector contacts.
b) Connect all the connectors.
c) Turn the battery disconnect switch to the on position.
d) Turn the key start switch to the on position.
e) Operate the machine at low idle.
f) Check if the diagnostic code remains.

Result

- SA 166 SPN 702 FMI 06 is not active.

  Stop.
- SA 166 SPN 702 FMI 06 is active.

  Failure of the auxiliary valve module is possible but not common. Exit the procedure and do the procedure again. If the diagnostic code remains active, replace the module.

  Stop.

10.15 171 Three-point hitch valve module

10.15.1 Code SA 171 SPN 158 FMI 00

3-point hitch raise/lower valve module is reporting over-voltage.

The 3-point hitch raise/lower valve controller module is reporting over-voltage in its supplied power. All implement valves share the same 12-volt power circuit. Unless this error is also reported for all other implement valve controllers, the reporting controller is faulty.

Diagnosis and solution

1. Check the voltage at the valve module.

a) Turn the key start switch to the on position but do not start the engine.

b) Check the voltage between contacts 2 and 3 at the valve module connector.

Result

- The voltage is above 12 Volts.

  Troubleshoot the charging system.
- The voltage is at or near 12 volts.

  Replace the valve module.

  See step 2 to validate the repair.

2. Check if the diagnostic code remains.

a) Check and clean the harness connector contacts.

b) Connect all the connectors.

c) Turn the battery disconnect switch to the on position.

d) Turn the key start switch to the on position.

e) Operate the machine at low idle.

f) Check if the diagnostic code remains.

Result

- SA 171 SPN 158 FMI 00 is not active.

  Stop.
- SA 171 SPN 158 FMI 00 is active.

  Replace the valve module.

  Stop.

10.15.1.1 3-Point linkage valve electrical schematic

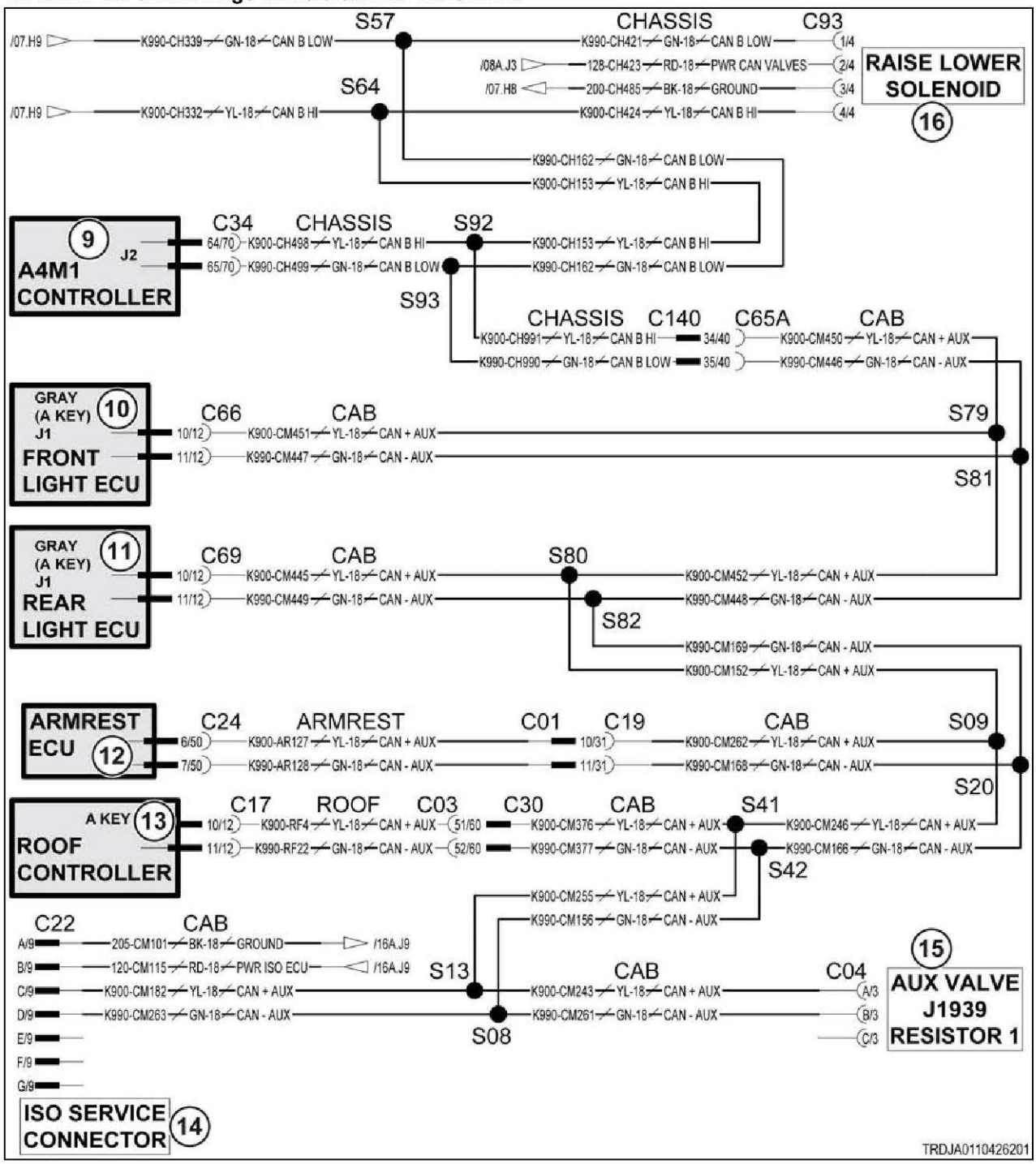

Fig. 678

Schematic legend		
Item	**Schematic term**	**Description**
9	A4M1 CONTROLLER	Transmission module
10	FRONT LIGHT ECU	Front lighting module
11	REAR LIGHT ECU	Rear lighting module
12	ARMREST ECU	Armrest module

Schematic legend		
Item	**Schematic term**	**Description**
13	ROOF CONTROLLER	Roof controller
14	ISO SERVICE CONNECTOR	ISO service connector
15	AUX VALVE J1939 RESISTOR 1	Controller area network (CAN) terminator
16	RAISE LOWER SOLENOID	Raise/lower solenoid
--	CAN B LOW	Controller area network (CAN) B low
--	CAN B HI	Controller area network (CAN) B high
--	PWR CAN VALVES	Power controller area network (CAN) valves
--	CAN + AUX	Controller area network (CAN) high auxiliary
--	CAN - AUX	Controller area network (CAN) low auxiliary

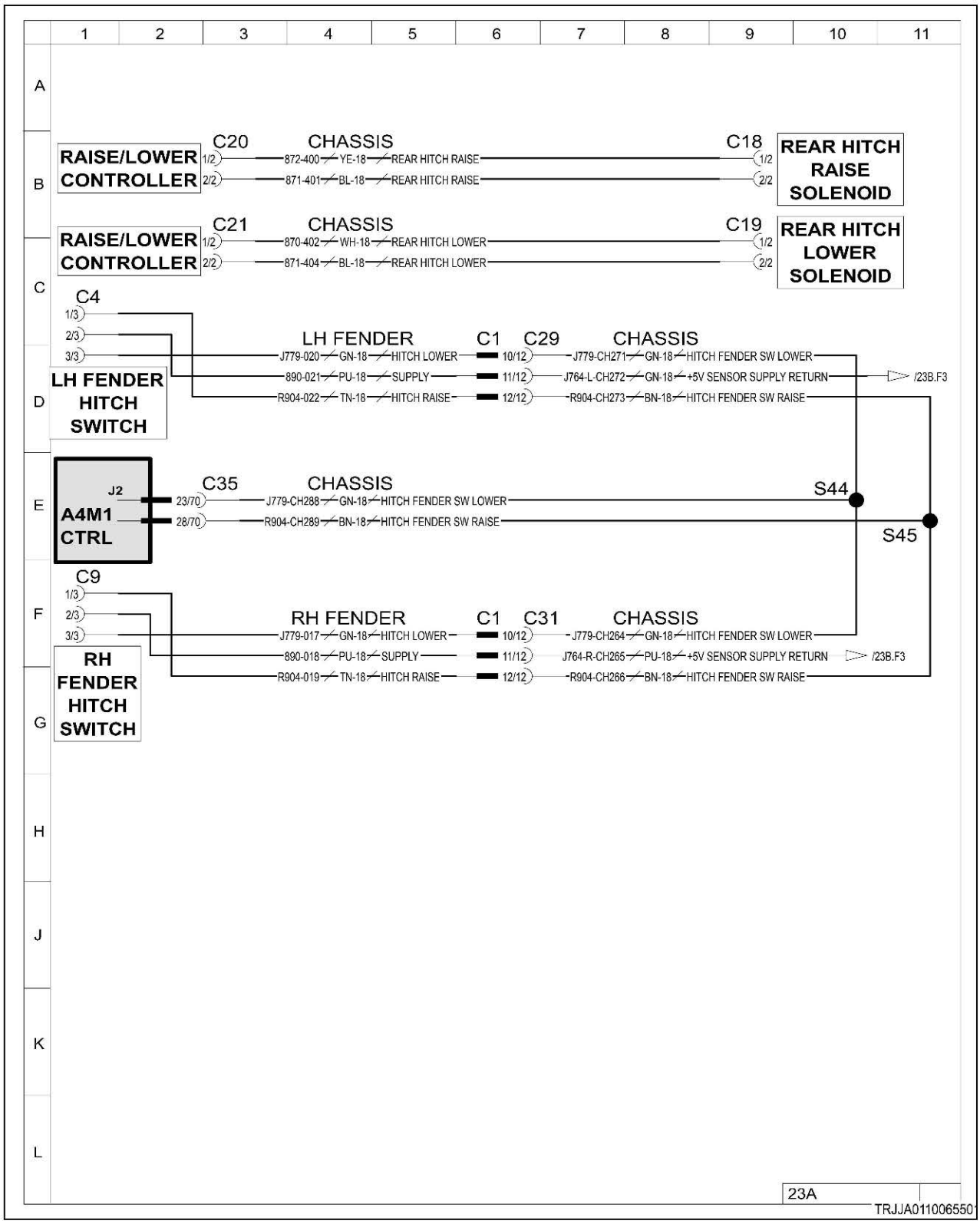
RAISE/LOWER CONTROLLER
C20
CHASSIS
C18
REAR HITCH RAISE SOLENOID
872-400 YE-18 REAR HITCH RAISE
871-401 BL-18 REAR HITCH RAISE
RAISE/LOWER CONTROLLER
C21
CHASSIS
C19
REAR HITCH LOWER SOLENOID
870-402 WH-18 REAR HITCH LOWER
871-404 BL-18 REAR HITCH LOWER
C4
LH FENDER HITCH SWITCH
LH FENDER
C1
C29
CHASSIS
J779-020 GN-18 HITCH LOWER
890-021 PU-18 SUPPLY
R904-022 TN-18 HITCH RAISE
J779-CH271 GN-18 HITCH FENDER SW LOWER
J764-L-CH272 GN-18 +5V SENSOR SUPPLY RETURN
/23B.F3
R904-CH273 BN-18 HITCH FENDER SW RAISE
A4M1 CTRL
J2
C35
CHASSIS
S44
S45
J779-CH288 GN-18 HITCH FENDER SW LOWER
R904-CH289 BN-18 HITCH FENDER SW RAISE
C9
RH FENDER HITCH SWITCH
RH FENDER
C1
C31
CHASSIS
J779-017 GN-18 HITCH LOWER
890-018 PU-18 SUPPLY
R904-019 TN-18 HITCH RAISE
J779-CH264 GN-18 HITCH FENDER SW LOWER
J764-R-CH265 PU-18 +5V SENSOR SUPPLY RETURN
/23B.F3
R904-CH266 BN-18 HITCH FENDER SW RAISE
23A
TRJJA011006550

Fig. 679

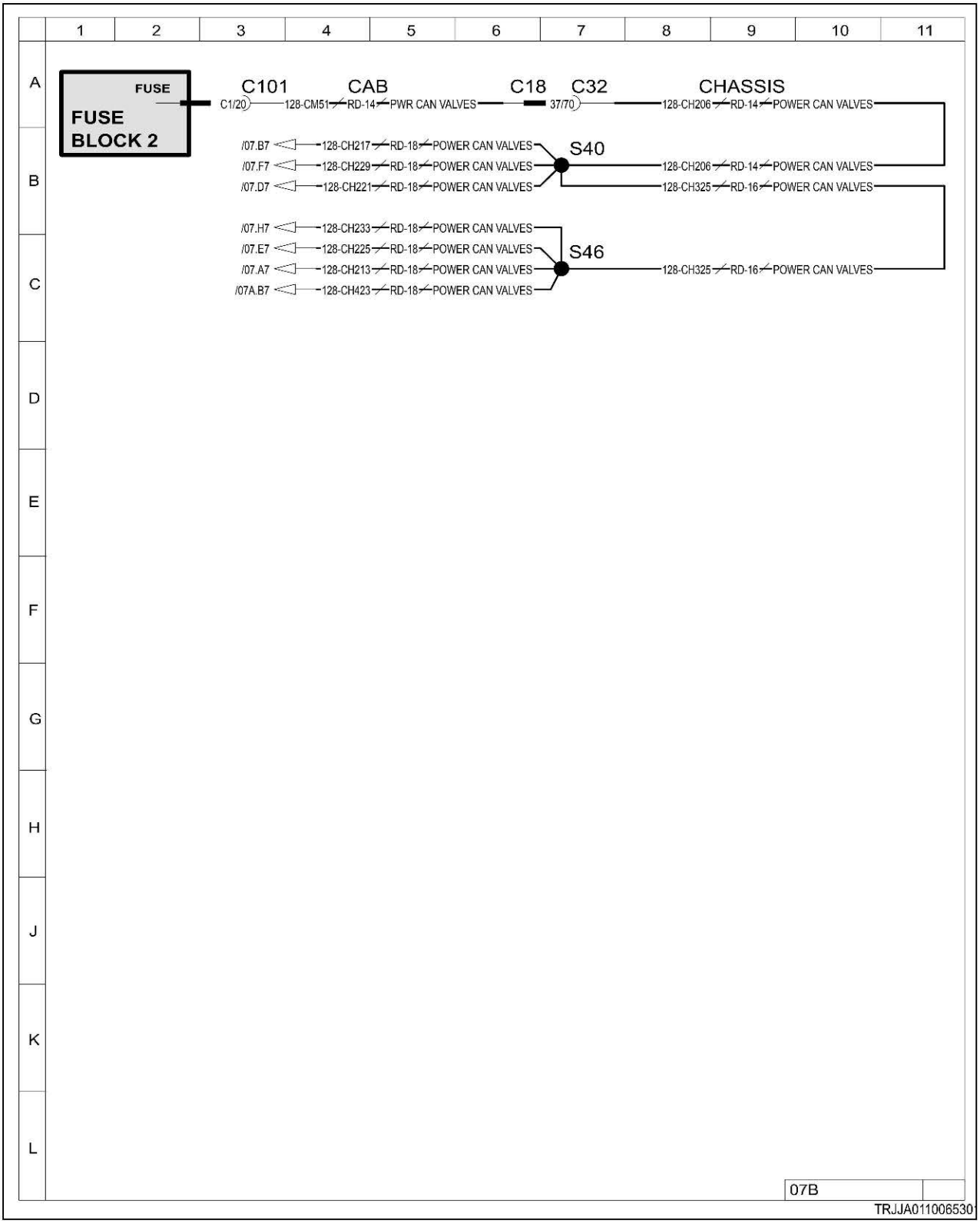

Fig. 680

10.15.2 Code SA 171 SPN 158 FMI 18

The hitch raise/lower valve module is reporting under-voltage.

The raise/lower valve controller module is reporting under-voltage in its supplied power. All implement valves share the same 12-volt power circuit. Unless this error is also reported for all implement valve controllers, the fault likely lies at or near the reporting valve controller.

Diagnosis and solution

1. Check the voltage at the raise/lower valve module.

a) Turn the key start switch to the on position but do not start the engine.

b) Check the voltage between contacts 2 and 3 at the valve module connector.

Result

- The voltage is at or near 12 volts.

  Replace the valve module.

  See step 3 to validate the repair.
- The voltage is below 12 Volts.

  Continue.

c) Check the voltage between contacts 2 and 3 of a nearby implement valve module connector, which is not reporting this same error.

Result

- All valves are reporting this same error.

  See step 2 to trace power and ground circuits.
- The voltage at this adjacent module is at or near 12 Volts.

  The fault in power is local to the valve module(s) that are reporting the error.

  Repair or replace the harness at the affected valve module(s).

  See step 3 to validate the repair.

2. Isolate the source of the voltage drop.

a) Check the voltage between fuse block 2, fuse 1 and chassis ground.

Result

- The voltage is below 12 volts.

  Inspect the fuse socket and fuse for corrosion.

  See step 3 to validate the repair.
- The voltage is at or near 12 Volts.

  Continue.

b) Check the voltage between contact 37 and chassis ground at the cab harness to chassis harness connector (C18 & C32).

Result

- The voltage is below 12 volts.

  Repair or replace the cab harness.

  See step 3 to validate the repair.
- The voltage is at or near 12 Volts.

  Repair or replace the chassis harness.

  See step 3 to validate the repair.

3. Check if the diagnostic code remains.

a) Inspect and clean the harness connector contacts.

b) Connect all the connectors.

c) Turn the battery disconnect switch to the on position.

d) Turn the key start switch to the on position.

e) Operate the machine at low idle.

f) Check if the diagnostic code remains.

Result

- SA 171 SPN 158 FMI 18 is not active.

  Stop.
- SA 171 SPN 158 FMI 18 is active.

  If the diagnostic code remains active, replace the valve module.

  Stop.

10.15.2.1 3-Point linkage valve electrical schematic

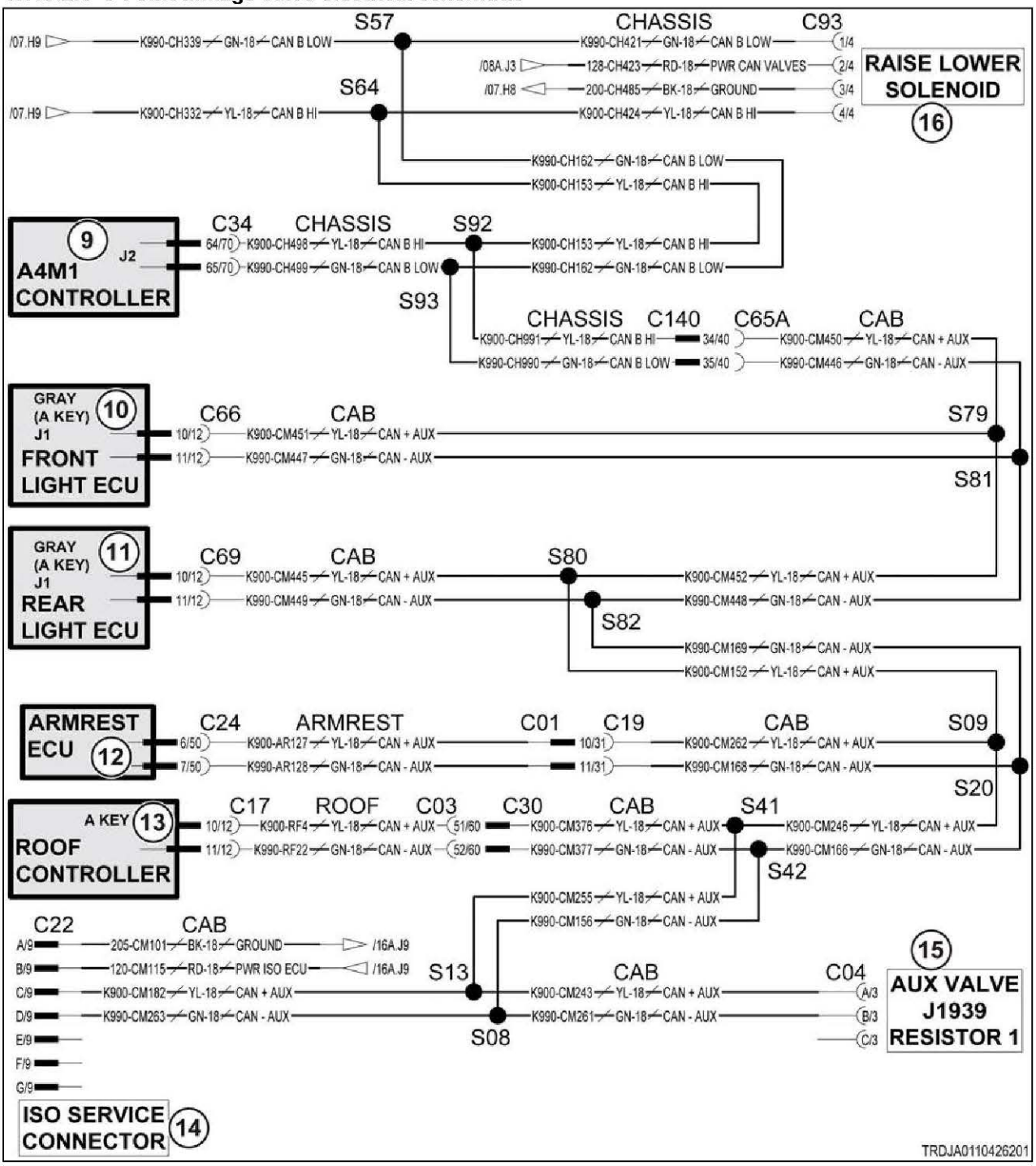

Fig. 681

Schematic legend		
Item	**Schematic term**	**Description**
9	A4M1 CONTROLLER	Transmission module
10	FRONT LIGHT ECU	Front lighting module
11	REAR LIGHT ECU	Rear lighting module
12	ARMREST ECU	Armrest module
13	ROOF CONTROLLER	Roof controller
14	ISO SERVICE CONNECTOR	ISO service connector
15	AUX VALVE J1939 RESISTOR 1	Controller area network (CAN) terminator
16	RAISE LOWER SOLENOID	Raise/lower solenoid
--	CAN B LOW	Controller area network (CAN) B low
--	CAN B HI	Controller area network (CAN) B high
--	PWR CAN VALVES	Power controller area network (CAN) valves
--	CAN + AUX	Controller area network (CAN) high auxiliary
--	CAN - AUX	Controller area network (CAN) low auxiliary

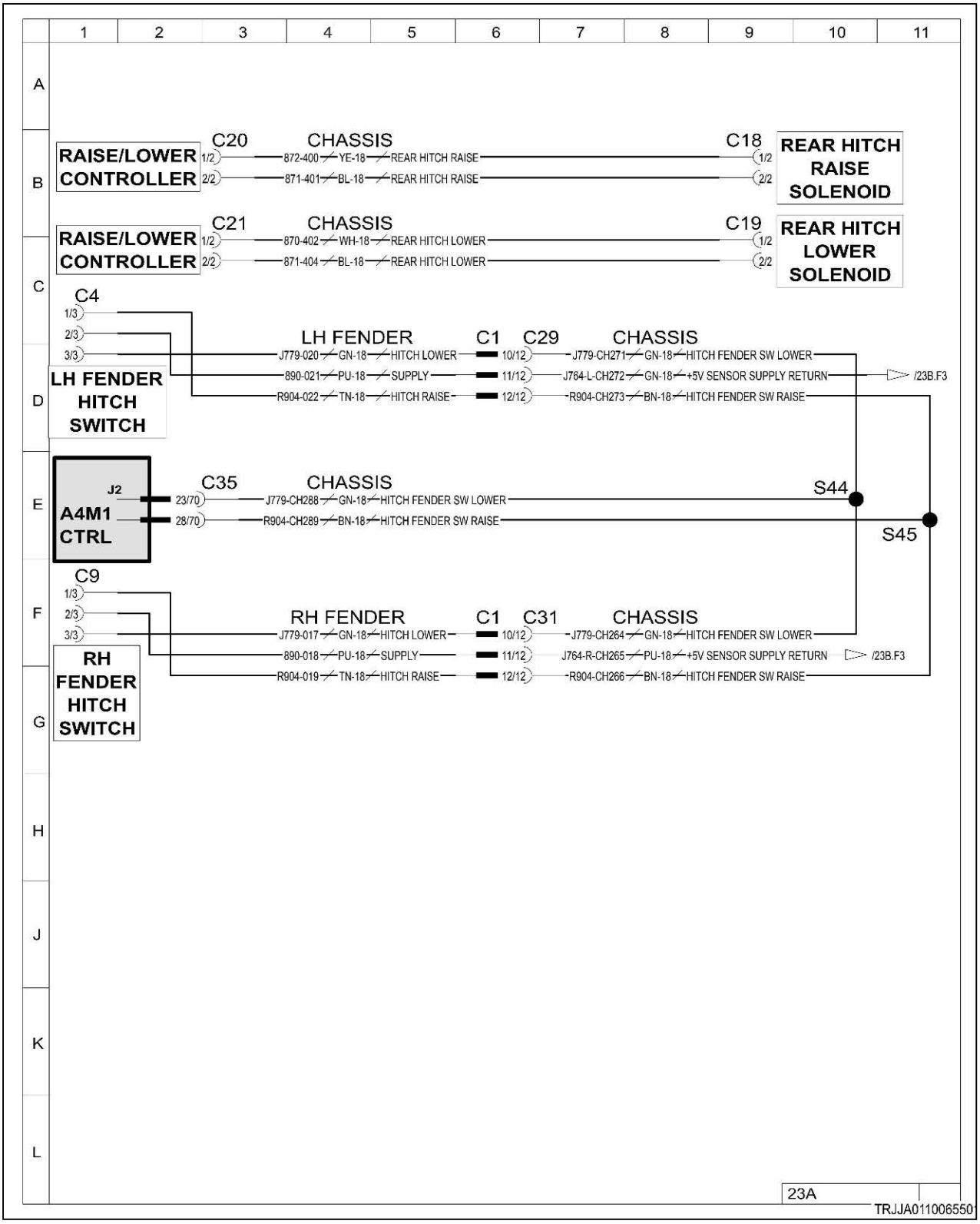
RAISE/LOWER CONTROLLER
C20
CHASSIS
C18
REAR HITCH RAISE SOLENOID
872-400 YE-18 REAR HITCH RAISE
871-401 BL-18 REAR HITCH RAISE
RAISE/LOWER CONTROLLER
C21
CHASSIS
C19
REAR HITCH LOWER SOLENOID
870-402 WH-18 REAR HITCH LOWER
871-404 BL-18 REAR HITCH LOWER
C4
LH FENDER HITCH SWITCH
LH FENDER
C1
C29
CHASSIS
J779-020 GN-18 HITCH LOWER
890-021 PU-18 SUPPLY
R904-022 TN-18 HITCH RAISE
J779-CH271 GN-18 HITCH FENDER SW LOWER
J764-L-CH272 GN-18 +5V SENSOR SUPPLY RETURN
/23B.F3
R904-CH273 BN-18 HITCH FENDER SW RAISE
A4M1 CTRL
J2
C35
CHASSIS
S44
S45
J779-CH288 GN-18 HITCH FENDER SW LOWER
R904-CH289 BN-18 HITCH FENDER SW RAISE
C9
RH FENDER HITCH SWITCH
RH FENDER
C1
C31
CHASSIS
J779-017 GN-18 HITCH LOWER
890-018 PU-18 SUPPLY
R904-019 TN-18 HITCH RAISE
J779-CH264 GN-18 HITCH FENDER SW LOWER
J764-R-CH265 PU-18 +5V SENSOR SUPPLY RETURN
/23B.F3
R904-CH266 BN-18 HITCH FENDER SW RAISE
23A
TRJJA011006550

Fig. 682

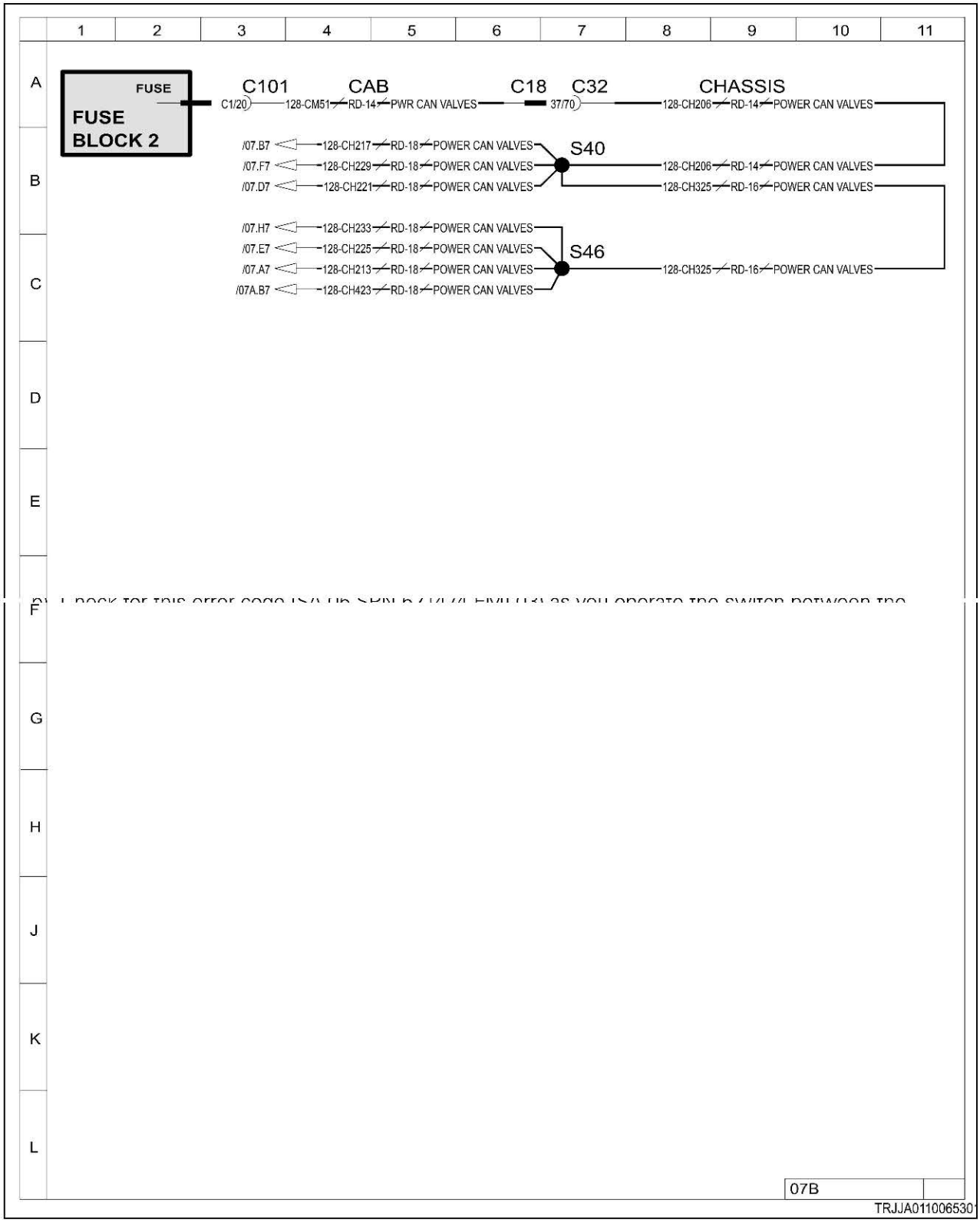

Fig. 683

10.15.3 Code SA 171 SPN 628 FMI 12

Hitch raise/lower valve module program memory - malfunction.

The hitch raise/lower valve and each of the implement valves has its own controller module, which operates the proportional and directional solenoids. Those solenoids are directly connected to the bottom of each control module. The likely cause for this error is a faulty valve control module.

Diagnosis and solution

1. Reset the module.
   a) Turn the key start switch to the off position.
   b) Wait 60 seconds.
   c) Turn the key start switch to the on position.
   d) Check for the fault code.

   Result

   - The fault code is not active.

     Stop.
   - The fault code is active.

     Replace the valve controller.

     See the hydraulics chapter in the service manual to properly program and set up the new controller.

2. Check if the fault code remains.
   a) Inspect and clean the harness connector contacts.
   b) Connect all the connectors.
   c) Turn the battery disconnect switch to the on position.
   d) Turn the key start switch to the on position.
   e) Operate the machine at low idle.
   f) Check for the fault code.

   Result

   - The fault code is not active.

     Stop.
   - The fault code is active.

     Exit the procedure and do the procedure again.

     Stop.

10.15.4 Code SA 171 SPN 639 FMI 19

The Controller Area Network (CAN) is not communicating correctly. The conditions defined by the software were not met.

Diagnosis and solution

1. Make sure the part numbers are correct

   - 3-Point linkage valve module software part number
   - 3-Point linkage valve module part number

   Result

   Expected result - all part numbers are correct.

   Results:

   - Yes - all part numbers are correct.

     see step 2, page 10-1184
   - No - one or more part number is not correct.

     Install the correct module and flash the correct software.

     see step 3, page 10-1185

2. Inspect the harness connections.

a) Turn the key start switch to the off position.
b) Turn the battery disconnect switch to the off position.
c) Remove the key from the battery disconnect switch.
d) Check all harness connections.

Result

Expected result - harness connections are good.

Results:

- Yes - harness connections are good.

  see step 3, page 10-1185
- No - harness connections are not good.

  Repair or replace the harness.

  see step 3, page 10-1185

3. Check for other diagnostic codes for this module.

a) Turn the key start switch to the off position.
b) Turn the battery disconnect switch to the off position.
c) Remove the key from the battery disconnect switch.
d) Connect the module using the controller area network (CAN) data link.
e) Turn the battery disconnect switch to the on position.
f) Turn the key start switch to the on position.
g) Check for active diagnostic codes for this module.

Result

Expected result - no diagnostic codes are active for this module.

Results:

- Yes - no diagnostic codes are active.

  Stop.
- No - diagnostic codes are active for this module.

  Failure of this module is possible but not common. Exit the procedure and troubleshoot the active codes. If the diagnostic code remains active, replace the module.

  Stop.

10.15.4.1 3-Point linkage valve electrical schematic

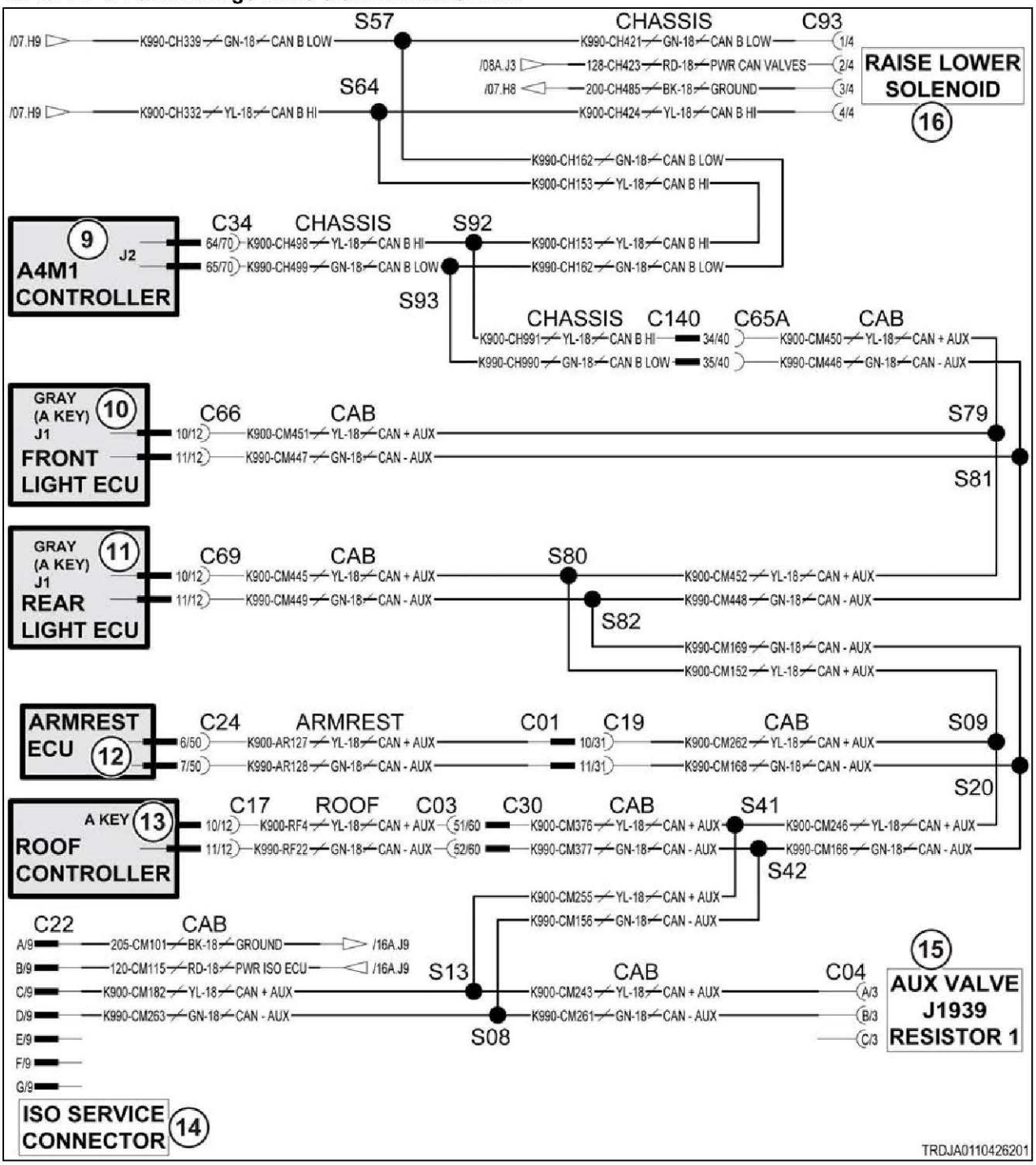

Fig. 684

Schematic legend		
Item	**Schematic term**	**Description**
9	A4M1 CONTROLLER	Transmission module
10	FRONT LIGHT ECU	Front lighting module
11	REAR LIGHT ECU	Rear lighting module
12	ARMREST ECU	Armrest module

Schematic legend		
Item	**Schematic term**	**Description**
13	ROOF CONTROLLER	Roof controller
14	ISO SERVICE CONNECTOR	ISO service connector
15	AUX VALVE J1939 RESISTOR 1	Controller area network (CAN) terminator
16	RAISE LOWER SOLENOID	Raise/lower solenoid
--	CAN B LOW	Controller area network (CAN) B low
--	CAN B HI	Controller area network (CAN) B high
--	PWR CAN VALVES	Power controller area network (CAN) valves
--	CAN + AUX	Controller area network (CAN) high auxiliary
--	CAN - AUX	Controller area network (CAN) low auxiliary

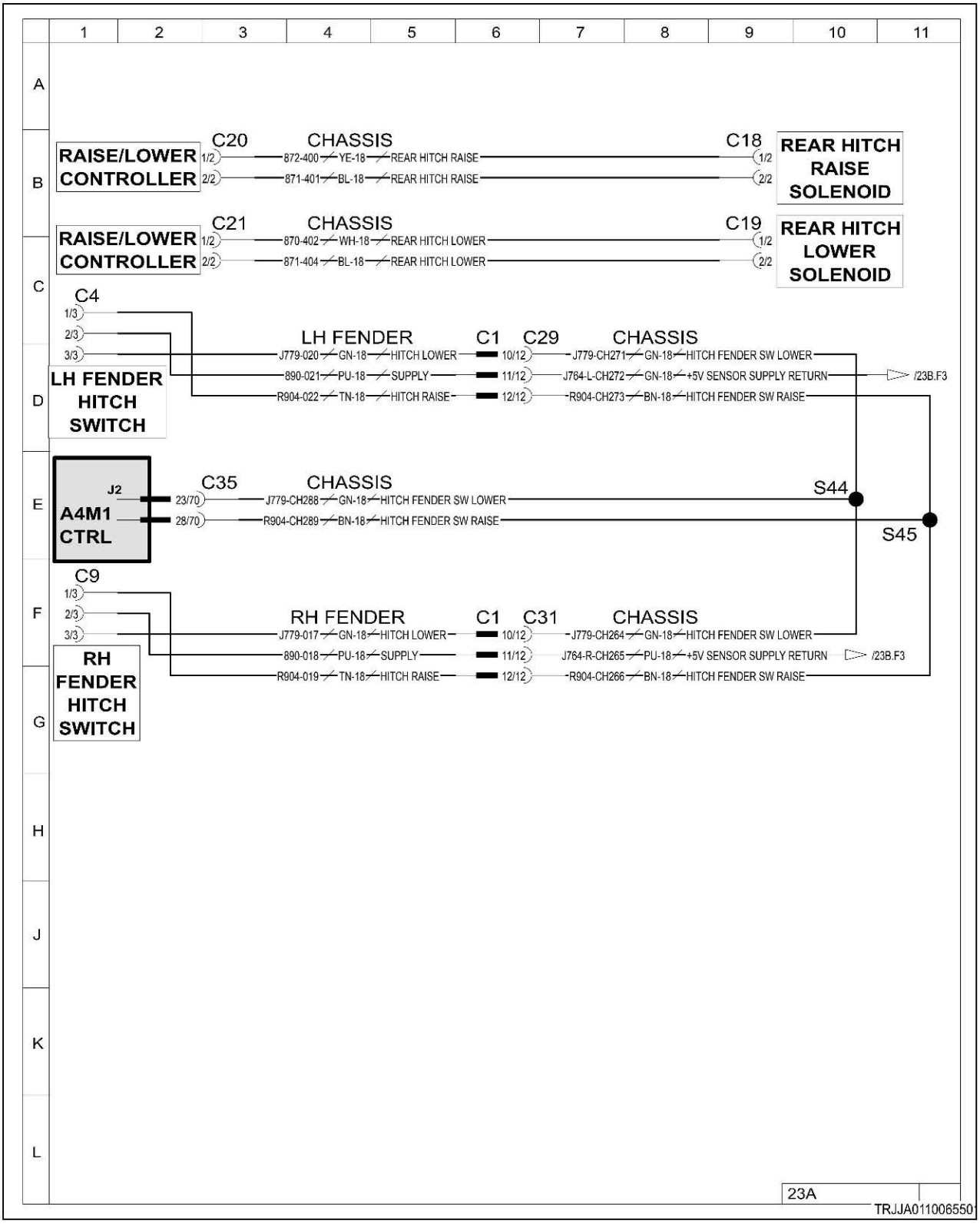
RAISE/LOWER CONTROLLER
C20
CHASSIS
C18
REAR HITCH RAISE SOLENOID
872-400 YE-18 REAR HITCH RAISE
871-401 BL-18 REAR HITCH RAISE
RAISE/LOWER CONTROLLER
C21
CHASSIS
C19
REAR HITCH LOWER SOLENOID
870-402 WH-18 REAR HITCH LOWER
871-404 BL-18 REAR HITCH LOWER
C4
LH FENDER HITCH SWITCH
LH FENDER
C1
C29
CHASSIS
J779-020 GN-18 HITCH LOWER
890-021 PU-18 SUPPLY
R904-022 TN-18 HITCH RAISE
J779-CH271 GN-18 HITCH FENDER SW LOWER
J764-L-CH272 GN-18 +5V SENSOR SUPPLY RETURN
/23B.F3
R904-CH273 BN-18 HITCH FENDER SW RAISE
A4M1 CTRL
J2
C35
CHASSIS
S44
S45
J779-CH288 GN-18 HITCH FENDER SW LOWER
R904-CH289 BN-18 HITCH FENDER SW RAISE
C9
RH FENDER HITCH SWITCH
RH FENDER
C1
C31
CHASSIS
J779-017 GN-18 HITCH LOWER
890-018 PU-18 SUPPLY
R904-019 TN-18 HITCH RAISE
J779-CH264 GN-18 HITCH FENDER SW LOWER
J764-R-CH265 PU-18 +5V SENSOR SUPPLY RETURN
/23B.F3
R904-CH266 BN-18 HITCH FENDER SW RAISE
23A
TRJJA011006550

Fig. 685

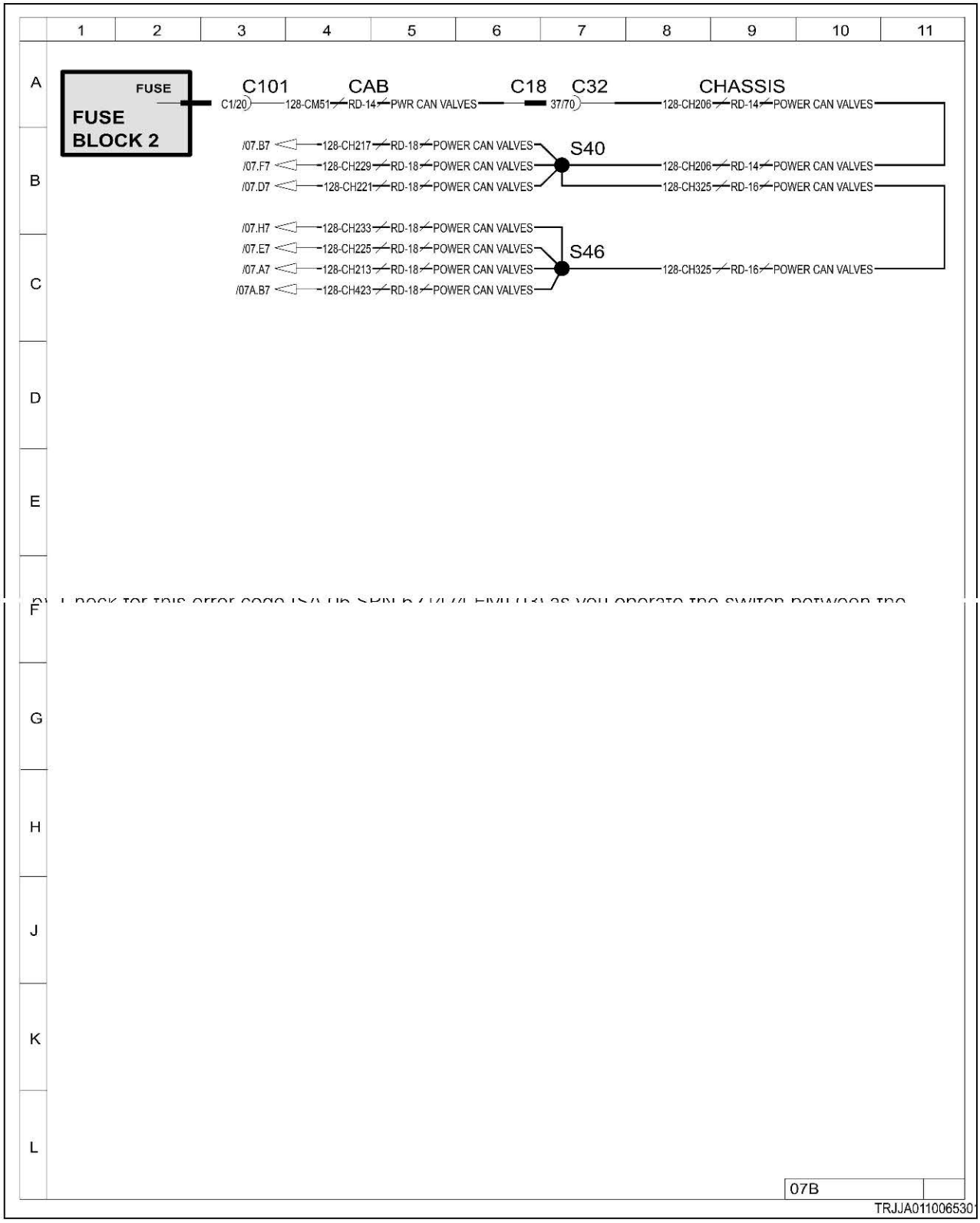

Fig. 686

10.15.5 Code SA 171 SPN 701 FMI 05

The hitch raise/lower controller is reporting the hydraulic valve proportional solenoid is disconnected.

The hitch raise/lower hydraulic valve, located at the rear of the machine, uses a separate micro controller located just below the left cab mounting post. This controller receives CANBus messages from the

armrest module, and sends electrical signals to the proportional and directional solenoids of the hydraulic valve. The controller monitors the performance of the solenoids, and reports errors through the CANBus.

Diagnosis and solution

1. Temporarily swap solenoids.

a) Mark the solenoid connectors to ensure proper replacement later.
b) Swap the harness connectors for the directional and proportional solenoids.
c) Turn the key start switch to the on position, but do not start the engine.
d) Check for diagnostic codes.

Result

- The diagnostic code changed from SPN 701 to SPN 702.

  The solenoid is at fault.

  Replace the solenoid.

  Make sure to swap the connectors back to their original locations.
- The diagnostic code remains unchanged.

  Continue.

2. Temporarily swap the cables.

a) Turn the key start switch to the off position.
b) The solenoid connectors should still be swapped from step 1.
c) Mark the harness connectors at the control module to ensure proper replacement later.
d) Swap the harness connectors at the control module.
e) Turn the key start switch to the on position, but do not start the engine.
f) Check for diagnostic codes.

Result

- The diagnostic code changed from SPN 701 to SPN 702.

  The chassis harness is open.

  Repair or replace the harness.

  Continue below.
- The diagnostic code remains unchanged.

  The valve controller is at fault.

  Replace the valve controller.

  See the hydraulics chapter in the service manual to properly program and set up the new controller.

  Continue.

g) Make sure the connectors at the valve controller get returned to their original position.
h) Make sure the connectors at the solenoids get returned to their original position.
i) See step 3 to validate the repairs.

3. Check if the diagnostic code remains.

a) Inspect and clean the harness connector contacts.
b) Make sure all connectors are returned to their correct positions.
c) Turn the key start switch to the on position.
d) Operate the machine at low idle.
e) Check if the diagnostic code remains.

Result

- SPN 701 FMI 05 is not active.

  Stop.
- SPN 701 FMI 05 is active.

  Failure of the module is possible but not common. Exit the procedure and do the procedure again. If the diagnostic code remains active, replace the module.

  Stop.

10.15.6 Code SA 171 SPN 701 FMI 06

The hitch raise/lower controller is reporting the hydraulic valve proportional solenoid is drawing excessive current.

The hitch raise/lower hydraulic valve, located at the rear of the machine, uses a separate micro controller located just below the left cab mounting post. This controller receives CANBus messages from the armrest module, and sends electrical signals to the proportional and directional solenoids of the hydraulic valve. The controller monitors the performance of the solenoids, and reports errors through the CANBus.

Diagnosis and solution

1. Temporarily swap solenoids.

a) Mark the solenoid connectors to ensure proper replacement later.
b) Swap the harness connectors for the directional and proportional solenoids.
c) Turn the key start switch to the on position, but do not start the engine.
d) Check for diagnostic codes.

Result

- The diagnostic code changed from SPN 701 to SPN 702.

  The solenoid is at fault.

  Replace the solenoid.

  Make sure to swap the connectors back to their original locations.
- The diagnostic code remains unchanged.

  Continue.

2. Temporarily swap the cables.

a) Turn the key start switch to the off position.
b) The solenoid connectors should still be swapped from step 1.
c) Mark the harness connectors at the control module to ensure proper replacement later.
d) Swap the harness connectors at the control module.
e) Turn the key start switch to the on position, but do not start the engine.
f) Check for diagnostic codes.

Result

- The diagnostic code changed from SPN 701 to SPN 702.

  The chassis harness is shorted.

  Repair or replace the harness.

  Continue below.

- The diagnostic code remains unchanged.

  The valve controller is at fault.

  Replace the valve controller.

  See the hydraulics chapter in the service manual to properly program and set up the new controller.

  Continue.

g) Make sure the connectors at the valve controller get returned to their original position.
h) Make sure the connectors at the solenoids get returned to their original position.
i) See step 3 to validate the repairs.

3. Check if the diagnostic code remains.
a) Inspect and clean the harness connector contacts.
b) Make sure all connectors are returned to their correct positions.
c) Turn the key start switch to the on position.
d) Operate the machine at low idle.
e) Check if the diagnostic code remains.

Result

- SPN 701 FMI 06 is not active.

  Stop.
- SPN 701 FMI 06 is active.

  Failure of the module is possible but not common. Exit the procedure and do the procedure again. If the diagnostic code remains active, replace the module.

  Stop.

10.15.7 Code SA 171 SPN 702 FMI 05

The hitch raise/lower controller is reporting the hydraulic valve directional solenoid is disconnected.

The hitch raise/lower hydraulic valve, located at the rear of the machine, uses a separate micro controller located just below the left cab mounting post. This controller receives CANBus messages from the armrest module, and sends electrical signals to the proportional and directional solenoids of the hydraulic valve. The controller monitors the performance of the solenoids, and reports errors through the CANBus.

Diagnosis and solution

1. Temporarily swap solenoids.
a) Mark the solenoid connectors to ensure proper replacement later.
b) Swap the harness connectors for the directional and proportional solenoids.
c) Turn the key start switch to the on position, but do not start the engine.
d) Check for diagnostic codes.

Result

- The diagnostic code changed from SPN 702 to SPN 701.

  The solenoid is at fault.

  Replace the solenoid.

  Make sure to swap the connectors back to their original locations.
- The diagnostic code remains unchanged.

  Continue.

2. Temporarily swap the cables.
a) Turn the key start switch to the off position.

b) The solenoid connectors should still be swapped from step 1.
c) Mark the harness connectors at the control module to ensure proper replacement later.
d) Swap the harness connectors at the control module.
e) Turn the key start switch to the on position, but do not start the engine.
f) Check for diagnostic codes.

Result

- The diagnostic code changed from SPN 702 to SPN 701.

  The chassis harness is open.

  Repair or replace the harness.

  Continue below.
- The diagnostic code remains unchanged.

  The valve controller is at fault.

  Replace the valve controller.

  See the hydraulics chapter in the service manual to properly program and set up the new controller.

  Continue.

g) Make sure the connectors at the valve controller get returned to their original position.
h) Make sure the connectors at the solenoids get returned to their original position.
i) See step 3 to validate the repairs.

3. Check if the diagnostic code remains.
a) Inspect and clean the harness connector contacts.
b) Make sure all connectors are returned to their correct positions.
c) Turn the key start switch to the on position.
d) Operate the machine at low idle.
e) Check if the diagnostic code remains.

Result

- SPN 702 FMI 05 is not active.

  Stop.
- SPN 702 FMI 05 is active.

  Failure of the module is possible but not common. Exit the procedure and do the procedure again. If the diagnostic code remains active, replace the module.

  Stop.

10.15.8 Code SA 171 SPN 702 FMI 06

The hitch raise/lower controller is reporting the hydraulic valve directional solenoid is drawing excessive current.

The hitch raise/lower hydraulic valve, located at the rear of the machine, uses a separate micro controller located just below the left cab mounting post. This controller receives CANBus messages from the armrest module, and sends electrical signals to the proportional and directional solenoids of the hydraulic valve. The controller monitors the performance of the solenoids, and reports errors through the CANBus.

Diagnosis and solution

1. Temporarily swap solenoids.
a) Mark the solenoid connectors to ensure proper replacement later.
b) Swap the harness connectors for the directional and proportional solenoids.
c) Turn the key start switch to the on position, but do not start the engine.

d) Check for diagnostic codes.

Result

- The diagnostic code changed from SPN 702 to SPN 701.

  The solenoid is at fault.

  Replace the solenoid.

  Make sure to swap the connectors back to their original locations.
- The diagnostic code remains unchanged.

  Continue.

2. Temporarily swap the cables.

a) Turn the key start switch to the off position.
b) The solenoid connectors should still be swapped from step 1.
c) Mark the harness connectors at the control module to ensure proper replacement later.
d) Swap the harness connectors at the control module.
e) Turn the key start switch to the on position, but do not start the engine.
f) Check for diagnostic codes.

Result

- The diagnostic code changed from SPN 702 to SPN 701.

  The chassis harness is shorted.

  Repair or replace the harness.

  Continue below.
- The diagnostic code remains unchanged.

  The valve controller is at fault.

  Replace the valve controller.

  See the hydraulics chapter in the service manual to properly program and set up the new controller.

  Continue.

g) Make sure the connectors at the valve controller get returned to their original position.
h) Make sure the connectors at the solenoids get returned to their original position.
i) See step 3 to validate the repairs.

3. Check if the diagnostic code remains.

a) Inspect and clean the harness connector contacts.
b) Make sure all connectors are returned to their correct positions.
c) Turn the key start switch to the on position.
d) Operate the machine at low idle.
e) Check if the diagnostic code remains.

Result

- SPN 702 FMI 06 is not active.

  Stop.
- SPN 702 FMI 06 is active.

  Failure of the module is possible but not common. Exit the procedure and do the procedure again. If the diagnostic code remains active, replace the module.

  Stop.

10.16 175 Unassigned auxiliary valve module

10.16.1 Code SA 175 SPN 639 FMI 19

Auxiliary valve electrical diagnostic tool identification value is not assigned.

Diagnosis and solution

Use the electrical diagnostic tool to assign the correct identification to the unassigned module.

10.17 208 Front lighting module

10.17.1 Code SA 208 SPN 2208 FMI 02

Front lighting module cannot read signal properly. Signal is erratic, intermittent, or incorrect.

Diagnosis and solution

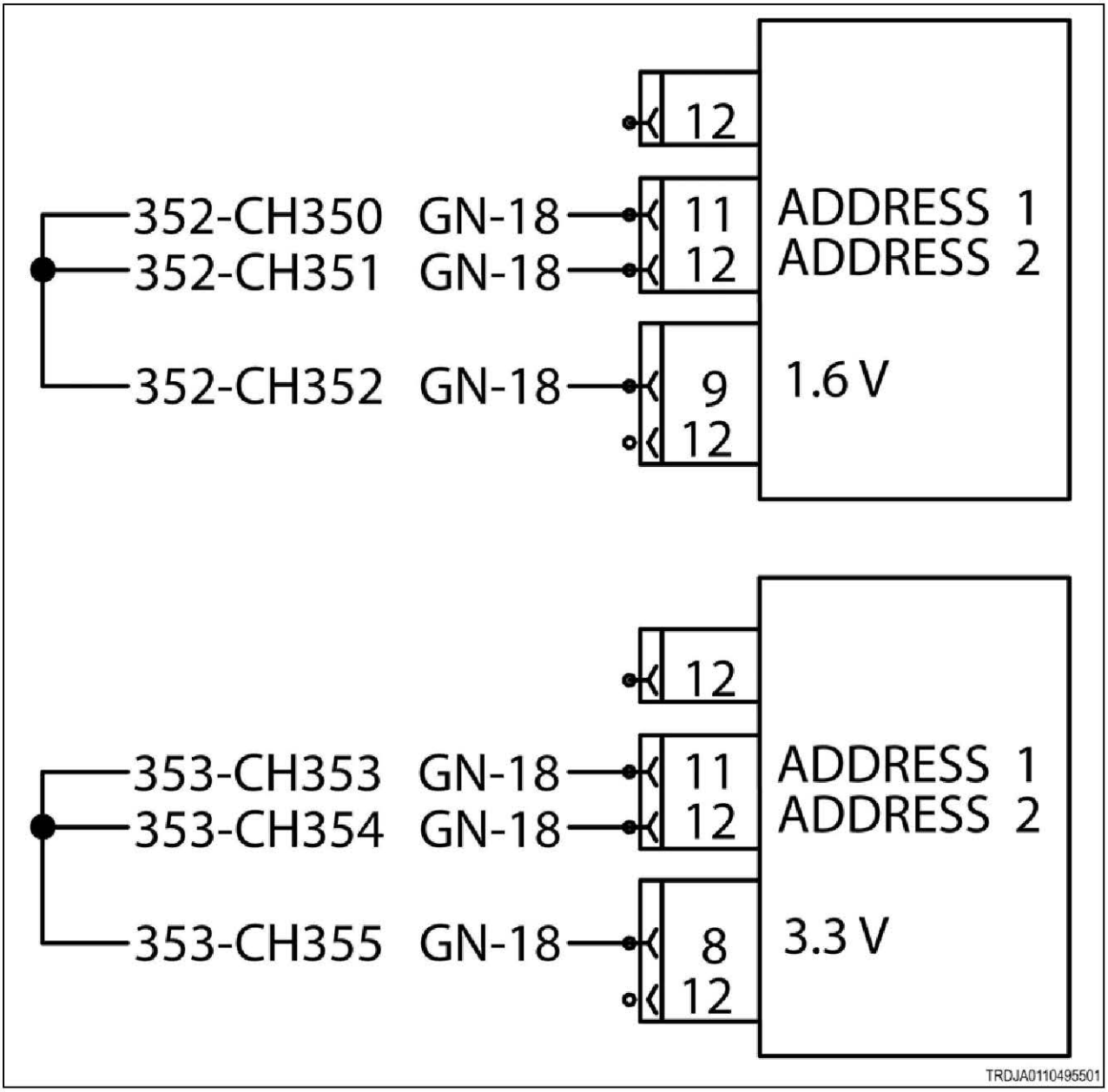

Fig. 687

1. Check the lighting module 1.6 volt source.

a) Disconnect all front lighting module connectors.
b) Turn the battery disconnect switch to the on position.
c) Turn the key start switch to the on position.
d) Check voltage between front lighting module contact J3-9 and frame ground.

Result

Expected result - voltage is 1.6 volts.

Results:

- Yes - voltage is 1.6 volts.

  see step 2, page 10-1197
- No - voltage is not 1.6 volts.

  Replace the front lighting module.

  see step 4, page 10-1197

2. Check for an open circuit in the harness.

a) Turn the key start switch to the off position.
b) Turn the battery disconnect switch to the off position.
c) Remove the key from the battery disconnect switch.
d) Check resistance from contact J3-9 to contact J2-11.
e) Check resistance from contact J3-9 to contact J2-12.

Result

Expected result - resistances are less than 5 ohms.

Results:

- Yes - resistances are less than 5 ohms.

  see step 4, page 10-1197
- No - one or more resistance is not less than 5 ohms.

  see step 3, page 10-1197

3. Check for a short-circuit in the harness.

a) Turn the key start switch to the off position.
b) Turn the battery disconnect switch to the off position.
c) Remove the key from the battery disconnect switch.
d) Check resistance between contact J2-11 and all other front lighting module contacts.
e) Check resistance between contact J2-12 and all other front lighting module contacts.

Result

Expected result - resistances are more than 5000 ohms.

Results:

- Yes - resistances are more than 5000 ohms.

  see step 4, page 10-1197
- No - resistances are not more than 5000 ohms.

  Repair or replace the harness.

  see step 4, page 10-1197

4. Check if the diagnostic code remains.

a) Check and clean the harness connector contacts.
b) Connect all the connectors.
c) Turn the battery disconnect switch to the on position.
d) Turn the key start switch to the on position.
e) Operate the machine at low idle.
f) Check if the diagnostic code remains.

Result

Expected result - the diagnostic code is not active.

Results:

- Yes - SPN 2208 FMI 02 is not active.

  Stop.
- No - SPN 2208 FMI 02 is active.

  Failure of the module is possible but not common. Exit the procedure and do the procedure again. If the diagnostic code remains active, replace the module.

  Stop.

10.17.2 Code SA 208 SPN 2354 FMI 05

Front lighting module has detected front work lamp current is below normal.

Diagnosis and solution

1. Check the lamps.

a) Turn the battery disconnect switch to the on position.
b) Turn the key start switch to the on position but do not start the engine.
c) Turn the flood lamp switch to the partial flood position.
d) Check all of the lamps.
e) Turn the flood lamp switch to the full flood position.
f) Check all the lamps.

Result

Expected result - all lamps are illuminated.

Results:

- Yes - all lamps are illuminated.

  see step 4, page 10-1199
- No - not all lamps are illuminated.

  Replace lamps that are not illuminated.

  If the replacement lamps illuminate, see step 4, page 10-1199

  If the replacement lamps do not illuminate, see step 2, page 10-1198

2. Check the right-hand flood lamp harness for an open circuit.

a) Turn the key start switch to the off position.
b) Turn the battery disconnect switch to the off position.
c) Remove the key from the battery disconnect switch.
d) Disconnect the harness connectors from all the flood lamps.
e) Disconnect harness connectors from the roof controller.
f) Put a jumper wire between right-hand right flood lamp connector contacts 1 and 2.
g) Check resistance from roof controller connector contact J1-7 to connector contact J3-10.
h) Move the jumper wire to right-hand center flood lamp connector contacts 1 and 2.
i) Check resistance from roof controller connector contact J1-12 to connector contact J3-10.
j) Move the jumper wire to right-hand left flood lamp connector contacts 1 and 2.
k) Check resistance from roof controller connector contact J1-2 to connector contact J3-10.

Result

Expected result - each resistance is less than 5 ohms.

Results:

- Yes - each resistance is less than 5 ohms.

  see step 3, page 10-1199

- No - one or more resistance is not less than 5 ohms.

  Repair or replace the harness.

  see step 4, page 10-1199

3. Check the left-hand flood lamp harness for an open circuit.

a) Turn the key start switch to the off position.
b) Turn the battery disconnect switch to the off position.
c) Remove the key from the battery disconnect switch.
d) Disconnect the harness connectors from all the flood lamps.
e) Disconnect harness connectors from the roof controller.
f) Put a jumper wire between left-hand left flood lamp connector contacts 1 and 2.
g) Check resistance from roof controller connector contact J1-6 to connector contact J3-10.
h) Move the jumper wire to left-hand center flood lamp connector contacts 1 and 2.
i) Check resistance from roof controller connector contact J1-1 to connector contact J3-10.
j) Move the jumper wire to left-hand right flood lamp connector contacts 1 and 2.
k) Check resistance from roof controller connector contact J1-3 to connector contact J3-10.

Result

Expected result - each resistance is less than 5 ohms.

Results:

- Yes - each resistance is less than 5 ohms.

  see step 4, page 10-1199
- No - one or more resistance is not less than 5 ohms.

  Repair or replace the harness.

  see step 4, page 10-1199

4. Check if the diagnostic code remains.

a) Check and clean the harness connector contacts.
b) Connect all the connectors.
c) Turn the battery disconnect switch to the on position.
d) Turn the key start switch to the on position.
e) Operate the machine at low idle.
f) Check if the diagnostic code remains.

Result

Expected result - the diagnostic code is not active.

Results:

- Yes - SPN 2354 FMI 05 is not active.

  Stop.
- No - SPN 2354 FMI 05 is active.

  Failure of the module is possible but not common. Exit the procedure and do the procedure again. If the diagnostic code remains active, replace the module.

  Stop.

10.17.2.1 Front lighting electrical schematic

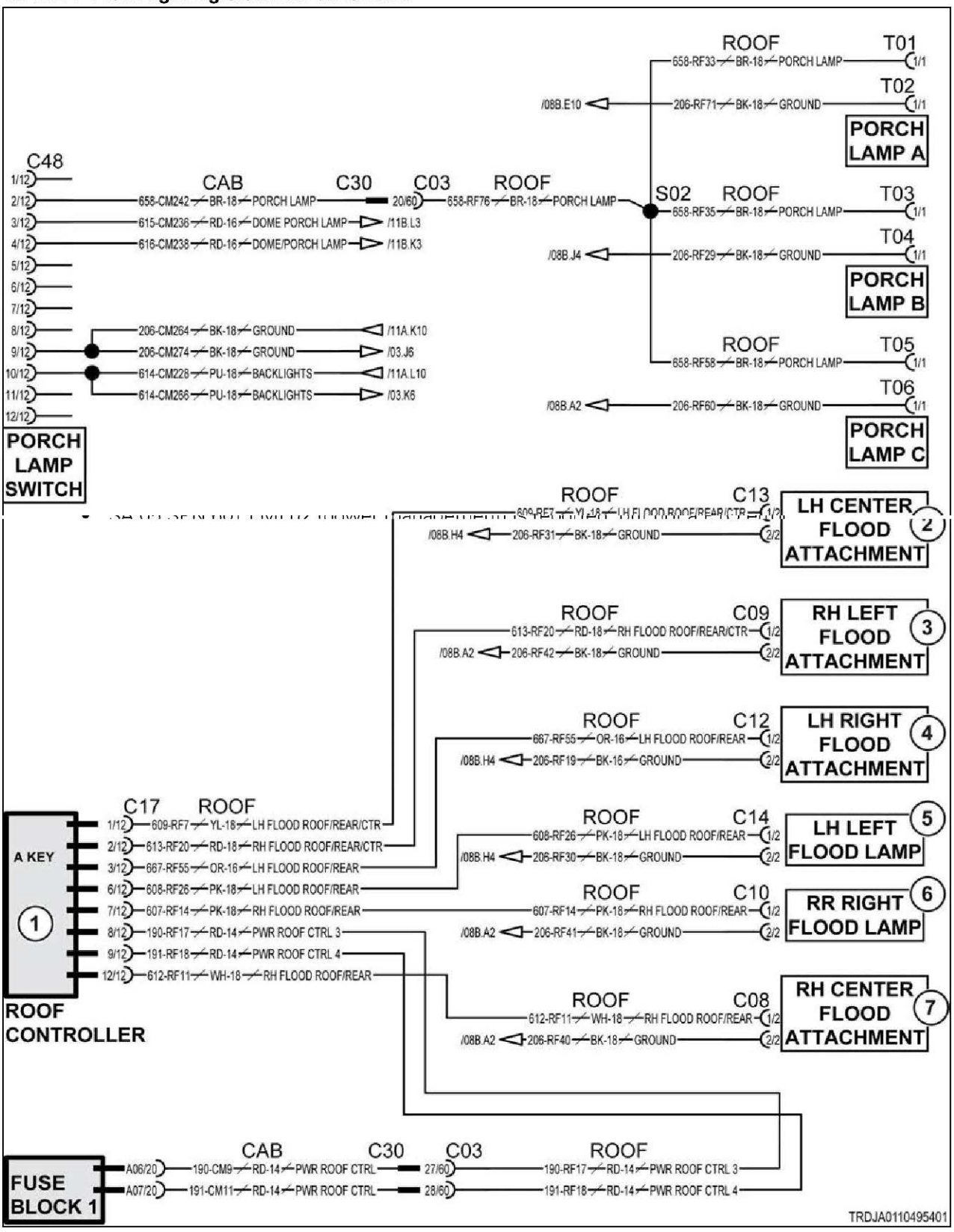

Fig. 688

Schematic legend		
Item	Schematic term	Description
1	ROOF CONTROLLER	Roof lighting module
2	LH CENTER FLOOD ATTACHMENT	Left-hand center flood rear attachment
3	RH LEFT FLOOD ATTACHMENT	Right-hand left flood rear attachment
4	LH RIGHT FLOOD ATTACHMENT	Left-hand right flood rear attachment
5	LH LEFT FLOOD LAMP	Left-hand left flood rear lamp
6	RR RIGHT FLOOD LAMP	Right-hand right flood rear lamp
7	RH CENTER FLOOD ATTACHMENT	Right-hand center flood rear attachment

10.17.3 Code SA 208 SPN 2354 FMI 06

Roof controller module has detected front work lamps current is above normal.

Diagnosis and solution

1. Check the harness for a short-circuit in the right-hand flood lamps.

a) Turn the key start switch to the off position.
b) Turn the battery disconnect switch to the off position.
c) Remove the key from the battery disconnect switch.
d) Disconnect the harness connectors from all the flood lamps.
e) Disconnect the harness connectors from the roof controller.
f) Check resistance from roof controller connector contact J1-2 to connector contact J3-10.
g) Check resistance from roof controller connector contact J1-12 to connector contact J3-10.
h) Check resistance from roof controller connector contact J1-7 to connector contact J3-10.

Result

Expected result - each resistance is more than 5000 ohms.

Results:

- Yes - each resistance is more than 5000 ohms.

  see step 2, page 10-1201
- No - one or more resistance is not more than 5000 ohms.

  Repair or replace the harness.

  see step 3, page 10-1202

2. Check the left-hand flood lamp harness for an open circuit.

a) Turn the key start switch to the off position.
b) Turn the battery disconnect switch to the off position.
c) Remove the key from the battery disconnect switch.
d) Disconnect the harness connectors from all the flood lamps.
e) Disconnect harness connectors from the roof controller.
f) Check resistance from roof controller connector contact J1-6 to connector contact J3-10.
g) Check resistance from roof controller connector contact J1-1 to connector contact J3-10.
h) Check resistance from roof controller connector contact J1-3 to connector contact J3-10.

Result

Expected result - each resistance is more than 5000 ohms.

Results:

- Yes - each resistance is more than 5000 ohms.

  see step 3, page 10-1202
- No - one or more resistance is not more than 5000 ohms.

  Repair or replace the harness.

  see step 3, page 10-1202

3. Check if the diagnostic code remains.

a) Check and clean the harness connector contacts.
b) Connect all the connectors.
c) Turn the battery disconnect switch to the on position.
d) Turn the key start switch to the on position.
e) Operate the machine at low idle.
f) Check if the diagnostic code remains.

Result

Expected result - the diagnostic code is not active.

Results:

- Yes - SPN 2354 FMI 06 is not active.

  Stop.
- No - SPN 2354 FMI 06 is active.

  Failure of the module is possible but not common. Exit the procedure and do the procedure again. If the diagnostic code remains active, replace the module.

  Stop.

10.17.3.1 Front lighting electrical schematic

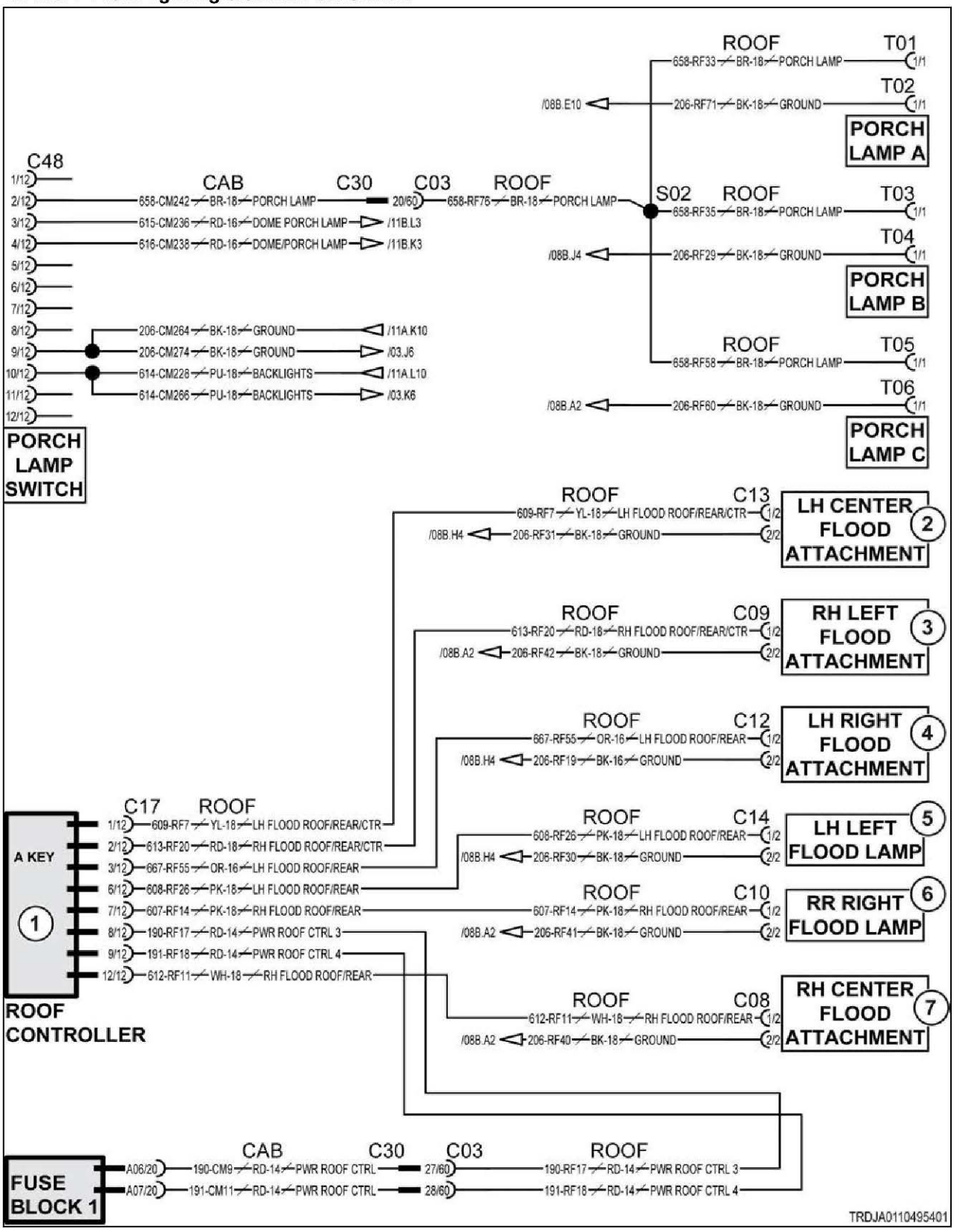

Fig. 689

Schematic legend		
Item	Schematic term	Description
1	ROOF CONTROLLER	Roof lighting module
2	LH CENTER FLOOD ATTACHMENT	Left-hand center flood rear attachment
3	RH LEFT FLOOD ATTACHMENT	Right-hand left flood rear attachment
4	LH RIGHT FLOOD ATTACHMENT	Left-hand right flood rear attachment
5	LH LEFT FLOOD LAMP	Left-hand left flood rear lamp
6	RR RIGHT FLOOD LAMP	Right-hand right flood rear lamp
7	RH CENTER FLOOD ATTACHMENT	Right-hand center flood rear attachment

10.17.4 Code SA 208 SPN 2368 FMI 05

Front lighting module has detected turn signal lamp current is below normal.

Diagnosis and solution

1. Check the harness for an open circuit.

a) Turn the key start switch to the off position.
b) Turn the battery disconnect switch to the off position.
c) Remove the key from the battery disconnect switch.
d) Disconnect the harness connectors from the lamp switch.
e) Disconnect harness connectors from the front lighting module.
f) Put a jumper wire from lamp switch connector contact 6 to connector contact 8.
g) Check resistance from front lighting module connector contact J2-3 to connector contact J2-4.

Result

Expected result - resistance is less than 5 ohms.

Results:

- Yes - resistance is less than 5 ohms.

  see step 2, page 10-1204
- No - resistance is not less than 5 ohms.

  Repair or replace the harness.

  see step 4, page 10-1205

2. Check the switch contacts for an open circuit.

a) Turn the key start switch to the off position.
b) Turn the battery disconnect switch to the off position.
c) Remove the key from the battery disconnect switch.
d) Disconnect the harness connectors from the lamp switch.
e) Disconnect harness connectors from the front lighting module.
f) Check resistance from lamp switch contact 6 to contact 8.
g) Check resistance from lamp switch contact 6 to contact 1.

Result

Expected result - each resistance is more than 5000 ohms.

Results:

- Yes - each resistance is more than 5000 ohms.

  see step 3, page 10-1205

- No - one or more resistance is not more than 5000 ohms.

  Replace the switch.

  see step 4, page 10-1205

3. Check the switch contacts for an open circuit.

a) Turn the key start switch to the off position.
b) Turn the battery disconnect switch to the off position.
c) Remove the key from the battery disconnect switch.
d) Disconnect the harness connectors from the lamp switch.
e) Disconnect harness connectors from the front lighting module.
f) Actuate lamp switch for a left-hand turn.
g) Check resistance from lamp switch contact 6 to contact 1.

Result

Expected result - resistance is less than 5 ohms.

Results:

- Yes - resistance is less than 5 ohms.

  see step 4, page 10-1205
- No - resistance is not less than 5 ohms.

  Replace the switch.

  see step 4, page 10-1205

4. Check if the diagnostic code remains.

a) Check and clean the harness connector contacts.
b) Connect all the connectors.
c) Turn the battery disconnect switch to the on position.
d) Turn the key start switch to the on position.
e) Operate the machine at low idle.
f) Check if the diagnostic code remains.

Result

Expected result - the diagnostic code is not active.

Results:

- Yes - SPN 2368 FMI 05 is not active.

  Stop.
- No - SPN 2368 FMI 05 is active.

  Failure of the module is possible but not common. Exit the procedure and do the procedure again. If the diagnostic code remains active, replace the module.

  Stop.

10.17.4.1 Chassis turn signal switch circuits electrical schematic

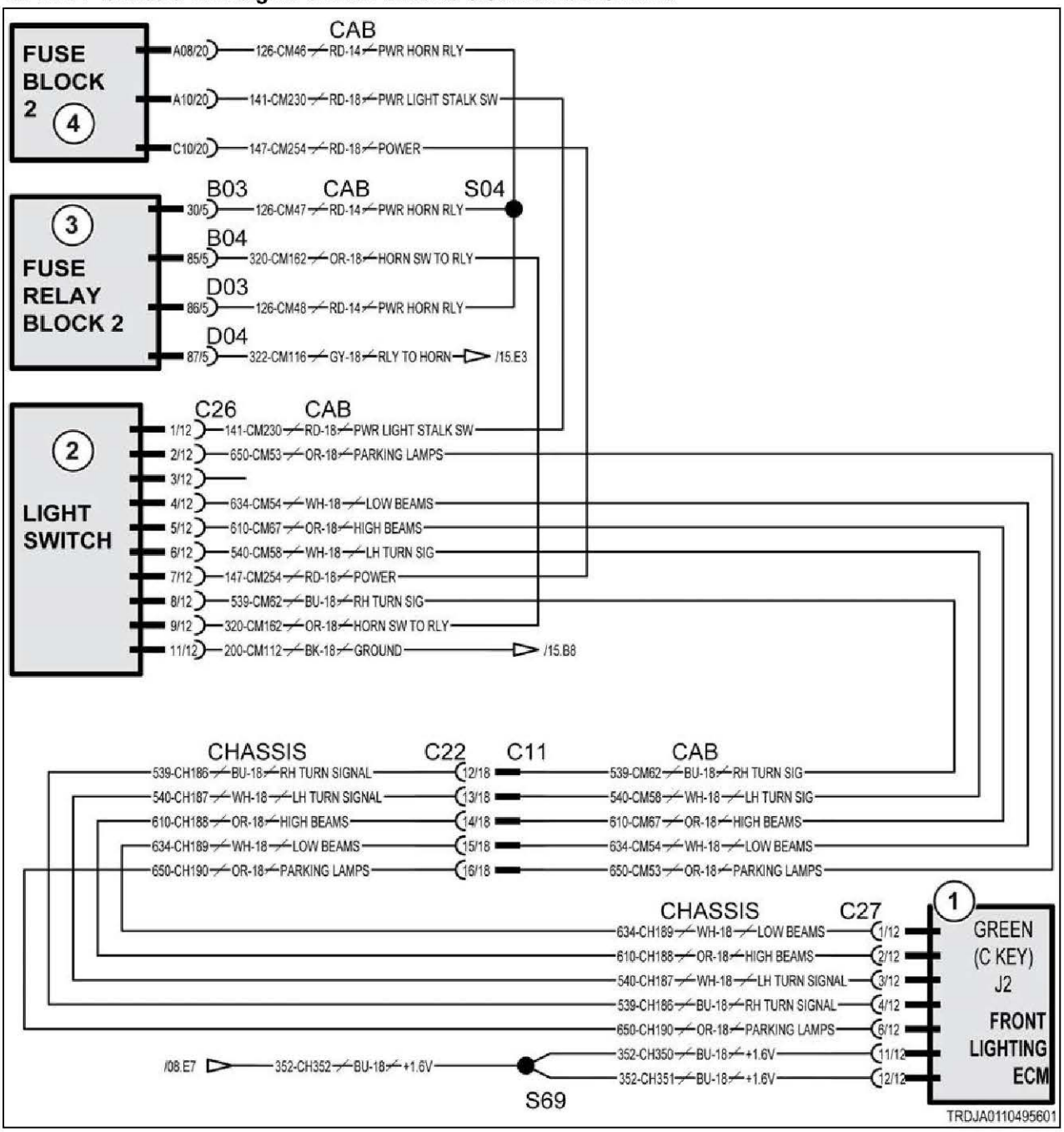

Fig. 690

Schematic legend		
Item	**Schematic term**	**Description**
1	FRONT LIGHTING ECM	Front lighting module
2	LIGHT SWITCH	Lamp switch
3	FUSE RELAY BLOCK 2	Fuse/relay block 2
4	FUSE BLOCK 2	Fuse block 2
--	LH TURN SIGNAL	Left-hand turn signal
--	RH TURN SIGNAL	Right-hand turn signal

Schematic legend		
Item	Schematic term	Description
--	HORN SW TO RLY	Horn switch to relay
--	PWR LIGHT STALK SW	Power lamp stalk switch
--	RLY TO HORN	Relay to horn
--	PWR HORN RLY	Power horn relay

10.17.5 Code SA 208 SPN 2368 FMI 06

Front lighting module has detected left-hand turn signal current is above normal.

Diagnosis and solution

1. Check the harness for a short-circuit.

a) Turn the key start switch to the off position.
b) Turn the battery disconnect switch to the off position.
c) Remove the key from the battery disconnect switch.
d) Disconnect the harness connectors from the lamp switch.
e) Disconnect harness connectors from the front lighting module.
f) Check resistance from lighting module contact J2-3 to all other front lighting module contacts.

Result

Expected result - resistance is more than 5000 ohms.

Results:

- Yes - resistance is more than 5000 ohms.

  see step 2, page 10-1207
- No - resistance is not more than 5000 ohms.

  Repair or replace the harness.

  see step 2, page 10-1207

2. Check if the diagnostic code remains.

a) Check and clean the harness connector contacts.
b) Connect all the connectors.
c) Turn the battery disconnect switch to the on position.
d) Turn the key start switch to the on position.
e) Operate the machine at low idle.
f) Check if the diagnostic code remains.

Result

Expected result - the diagnostic code is not active.

Results:

- Yes - SPN 2368 FMI 06 is not active.

  Stop.
- No - SPN 2368 FMI 06 is active.

  Failure of the module is possible but not common. Exit the procedure and do the procedure again. If the diagnostic code remains active, replace the module.

  Stop.

10.17.5.1 Chassis turn signal switch circuits electrical schematic

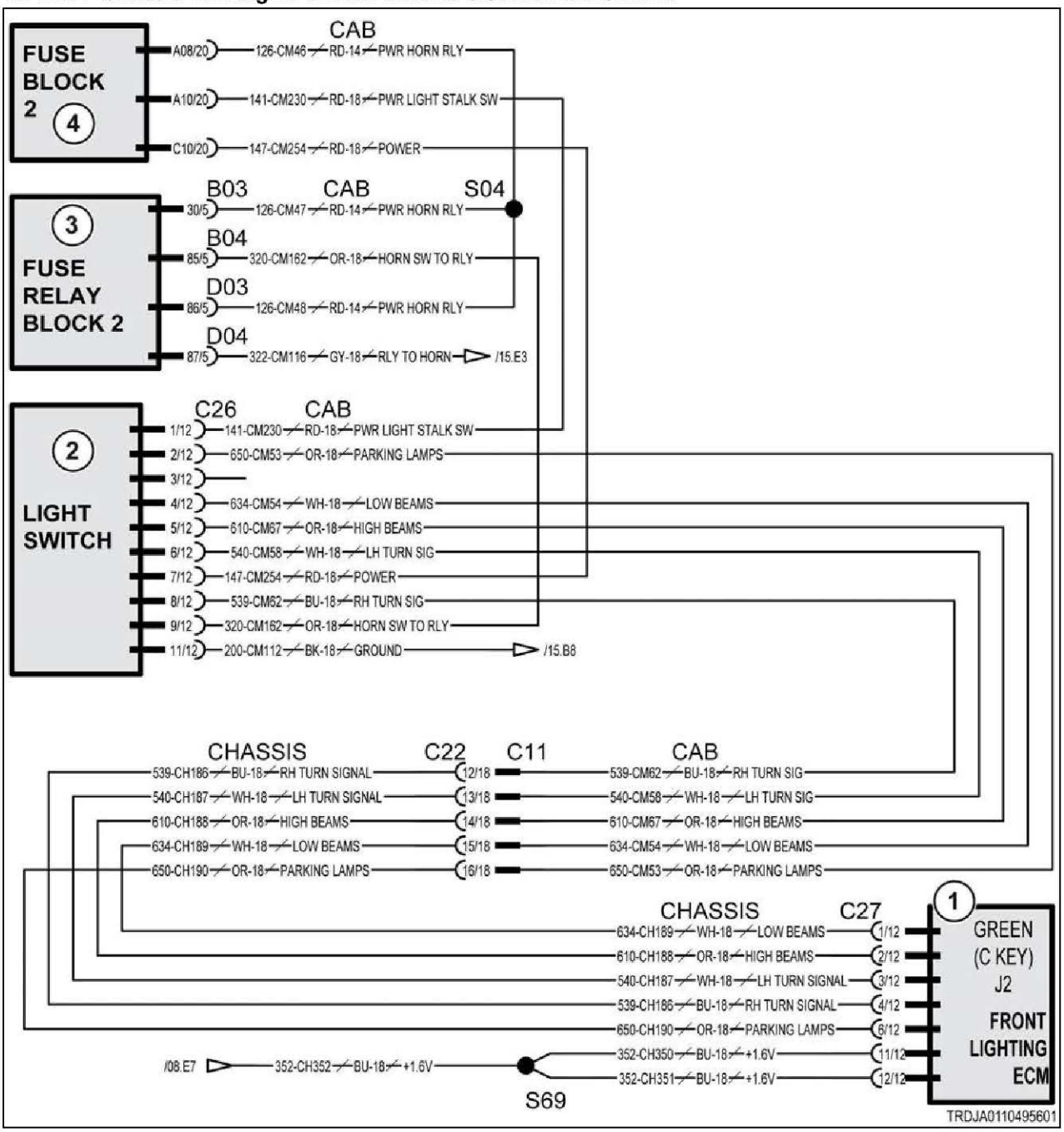

Fig. 691

Schematic legend		
Item	**Schematic term**	**Description**
1	FRONT LIGHTING ECM	Front lighting module
2	LIGHT SWITCH	Lamp switch
3	FUSE RELAY BLOCK 2	Fuse/relay block 2
4	FUSE BLOCK 2	Fuse block 2
--	LH TURN SIGNAL	Left-hand turn signal
--	RH TURN SIGNAL	Right-hand turn signal

Schematic legend		
Item	Schematic term	Description
--	HORN SW TO RLY	Horn switch to relay
--	PWR LIGHT STALK SW	Power lamp stalk switch
--	RLY TO HORN	Relay to horn
--	PWR HORN RLY	Power horn relay

10.17.6 Code SA 208 SPN 2370 FMI 05

Front lighting module has detected turn signal lamp current is below normal.

Diagnosis and solution

1. Check the harness for an open circuit.

a) Turn the key start switch to the off position.
b) Turn the battery disconnect switch to the off position.
c) Remove the key from the battery disconnect switch.
d) Disconnect the harness connectors from the lamp switch.
e) Disconnect harness connectors from the front lighting module.
f) Put a jumper wire from lamp switch connector contact 6 to connector contact 8.
g) Check resistance from front lighting module connector contact J2-3 to connector contact J2-4.

Result

Expected result - resistance is less than 5 ohms.

Results:

- Yes - resistance is less than 5 ohms.

  see step 2, page 10-1209
- No - resistance is not less than 5 ohms.

  Repair or replace the harness.

  see step 4, page 10-1210

2. Check the switch contacts for an open circuit.

a) Turn the key start switch to the off position.
b) Turn the battery disconnect switch to the off position.
c) Remove the key from the battery disconnect switch.
d) Disconnect the harness connectors from the lamp switch.
e) Disconnect harness connectors from the front lighting module.
f) Check resistance from lamp switch contact 6 to contact 8.
g) Check resistance from lamp switch contact 6 to contact 1.

Result

Expected result - each resistance is more than 5000 ohms.

Results:

- Yes - each resistance is more than 5000 ohms.

  see step 3, page 10-1209
- No - one or more resistance is not more than 5000 ohms.

  Replace the switch.

  see step 4, page 10-1210

3. Check the switch contacts for an open circuit.

a) Turn the key start switch to the off position.
b) Turn the battery disconnect switch to the off position.
c) Remove the key from the battery disconnect switch.
d) Disconnect the harness connectors from the lamp switch.
e) Disconnect harness connectors from the front lighting module.
f) Actuate lamp switch for a left-hand turn.
g) Check resistance from lamp switch contact 6 to contact 1.

Result

Expected result - resistance is less than 5 ohms.

Results:

- Yes - resistance is less than 5 ohms.

  see step 4, page 10-1210
- No - resistance is not less than 5 ohms.

  Replace the switch.

  see step 4, page 10-1210

4. Check if the diagnostic code remains.

a) Check and clean the harness connector contacts.
b) Connect all the connectors.
c) Turn the battery disconnect switch to the on position.
d) Turn the key start switch to the on position.
e) Operate the machine at low idle.
f) Check if the diagnostic code remains.

Result

Expected result - the diagnostic code is not active.

Results:

- Yes - SPN 2370 FMI 05 is not active.

  Stop.
- No - SPN 2370 FMI 05 is active.

  Failure of the module is possible but not common. Exit the procedure and do the procedure again. If the diagnostic code remains active, replace the module.

  Stop.

10.17.6.1 Chassis turn signal switch circuits electrical schematic

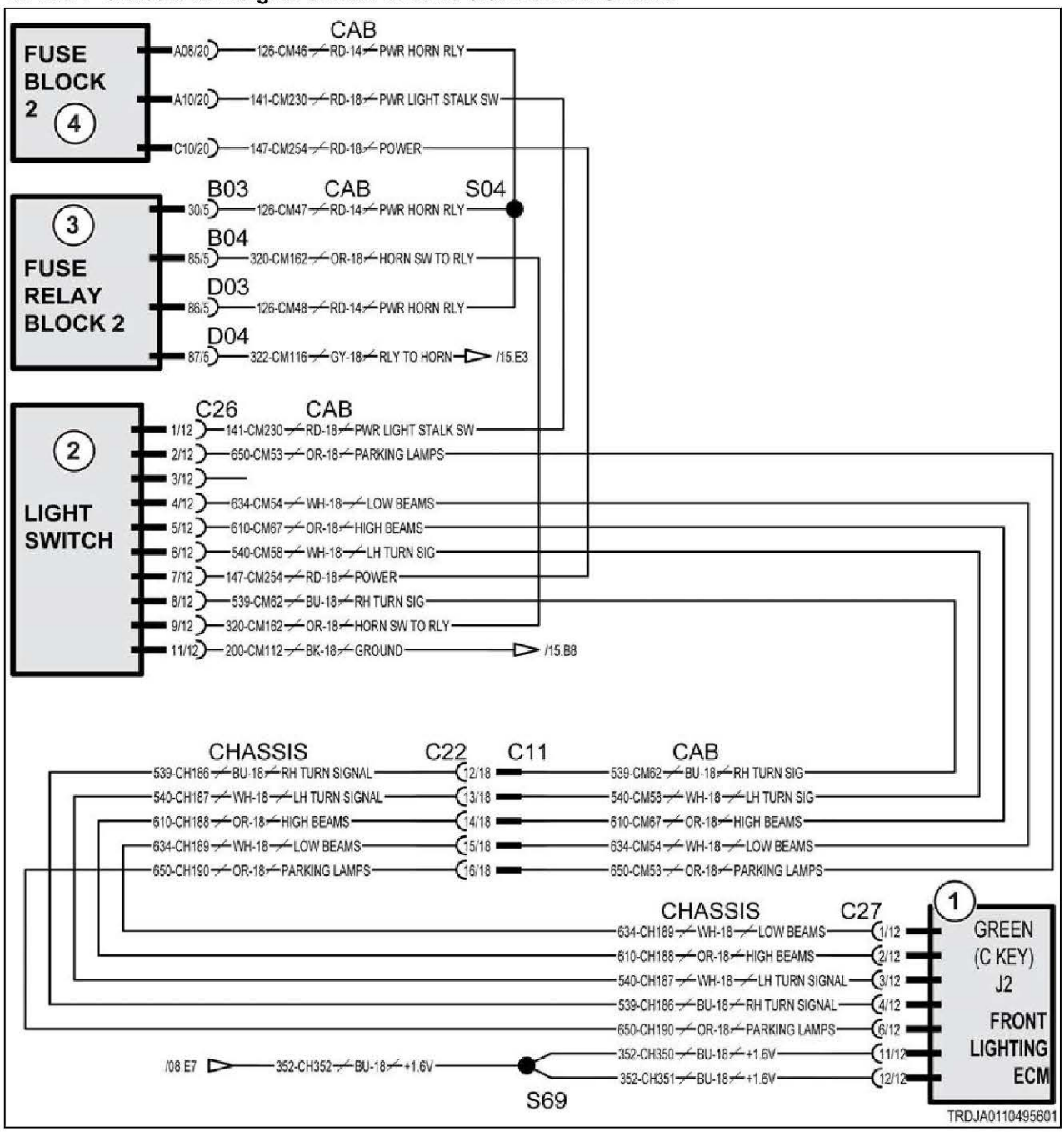

Fig. 692

Schematic legend		
Item	**Schematic term**	**Description**
1	FRONT LIGHTING ECM	Front lighting module
2	LIGHT SWITCH	Lamp switch
3	FUSE RELAY BLOCK 2	Fuse/relay block 2
4	FUSE BLOCK 2	Fuse block 2
--	LH TURN SIGNAL	Left-hand turn signal
--	RH TURN SIGNAL	Right-hand turn signal

Schematic legend		
Item	Schematic term	Description
--	HORN SW TO RLY	Horn switch to relay
--	PWR LIGHT STALK SW	Power lamp stalk switch
--	RLY TO HORN	Relay to horn
--	PWR HORN RLY	Power horn relay

10.17.7 Code SA 208 SPN 2370 FMI 06

Front lighting module has detected right-hand turn signal current is above normal.

Diagnosis and solution

1. Check the harness for a short-circuit.

a) Turn the key start switch to the off position.
b) Turn the battery disconnect switch to the off position.
c) Remove the key from the battery disconnect switch.
d) Disconnect the harness connectors from the lamp switch.
e) Disconnect harness connectors from the front lighting module.
f) Check resistance from lighting module contact J2-4 to all other front lighting module contacts.

Result

Expected result - resistance is more than 5000 ohms.

Results:

- Yes - resistance is more than 5000 ohms.

  see step 2, page 10-1212
- No - resistance is not more than 5000 ohms.

  Repair or replace the harness.

  see step 2, page 10-1212

2. Check if the diagnostic code remains.

a) Check and clean the harness connector contacts.
b) Connect all the connectors.
c) Turn the battery disconnect switch to the on position.
d) Turn the key start switch to the on position.
e) Operate the machine at low idle.
f) Check if the diagnostic code remains.

Result

Expected result - the diagnostic code is not active.

Results:

- Yes - SPN 2370 FMI 06 is not active.

  Stop.
- No - SPN 2370 FMI 06 is active.

  Failure of the module is possible but not common. Exit the procedure and do the procedure again. If the diagnostic code remains active, replace the module.

  Stop.

10.17.7.1 Chassis turn signal switch circuits electrical schematic

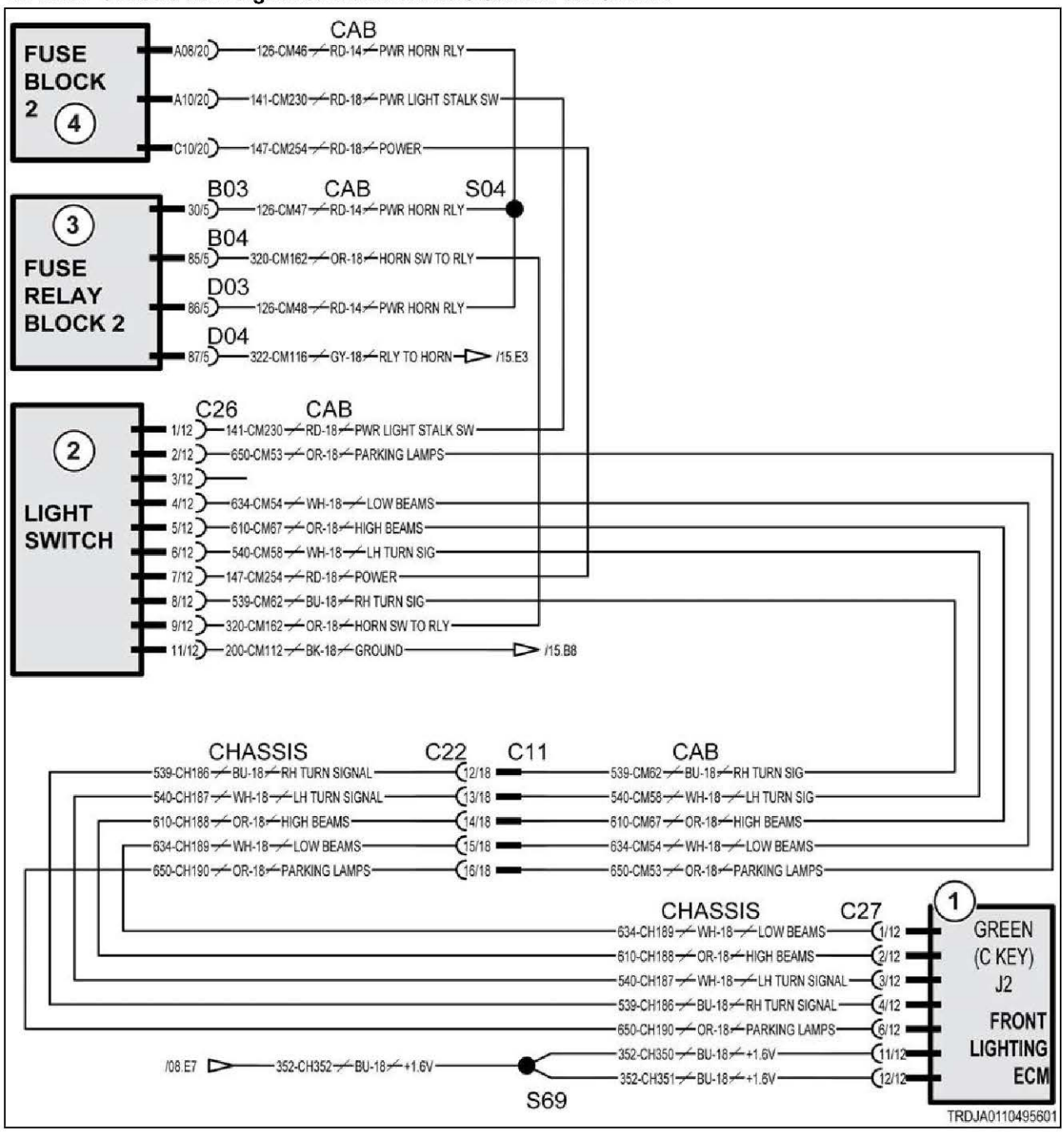

Fig. 693

Schematic legend		
Item	**Schematic term**	**Description**
1	FRONT LIGHTING ECM	Front lighting module
2	LIGHT SWITCH	Lamp switch
3	FUSE RELAY BLOCK 2	Fuse/relay block 2
4	FUSE BLOCK 2	Fuse block 2
--	LH TURN SIGNAL	Left-hand turn signal
--	RH TURN SIGNAL	Right-hand turn signal

Schematic legend		
Item	Schematic term	Description
--	HORN SW TO RLY	Horn switch to relay
--	PWR LIGHT STALK SW	Power lamp stalk switch
--	RLY TO HORN	Relay to horn
--	PWR HORN RLY	Power horn relay

10.17.8 Code SA 208 SPN 2653 FMI 05

Front lighting module has detected left-hand low beam current is below normal.

Diagnosis and solution

1. Check for an open circuit in the harness.

a) Turn the key start switch to the off position.
b) Turn the battery disconnect switch to the off position.
c) Remove the key from the battery disconnect switch.
d) Disconnect the harness connectors from the headlamps.
e) Disconnect harness connectors from the front lighting module.
f) Put a jumper wire from contact A to contact B on the left-hand low beam connector.
g) Check resistance from contact J1-4 to J3-10 on the front lighting module.

Result

Expected result - resistance is less than 5 ohms.

Results:

- Yes - resistance is less than 5 ohms.

  see step 2, page 10-1214
- No - resistance is not less than 5 ohms.

  Repair or replace the harness.

  see step 2, page 10-1214

2. Check if the diagnostic code remains.

a) Inspect and clean the harness connector contacts.
b) Connect all the connectors.
c) Turn the battery disconnect switch to the on position.
d) Turn the key start switch to the on position.
e) Operate the machine at low idle.
f) Check if the diagnostic code remains.

Result

Expected result - the diagnostic code is not active.

Results:

- Yes - SPN 2653 FMI 05 is not active.

  Stop.
- No - SPN 2653 FMI 05 is active.

  Failure of the module is possible but not common. Exit the procedure and do the procedure again. If the diagnostic code remains active, replace the module.

  Stop.

10.17.8.1 Headlamp circuits electrical schematic

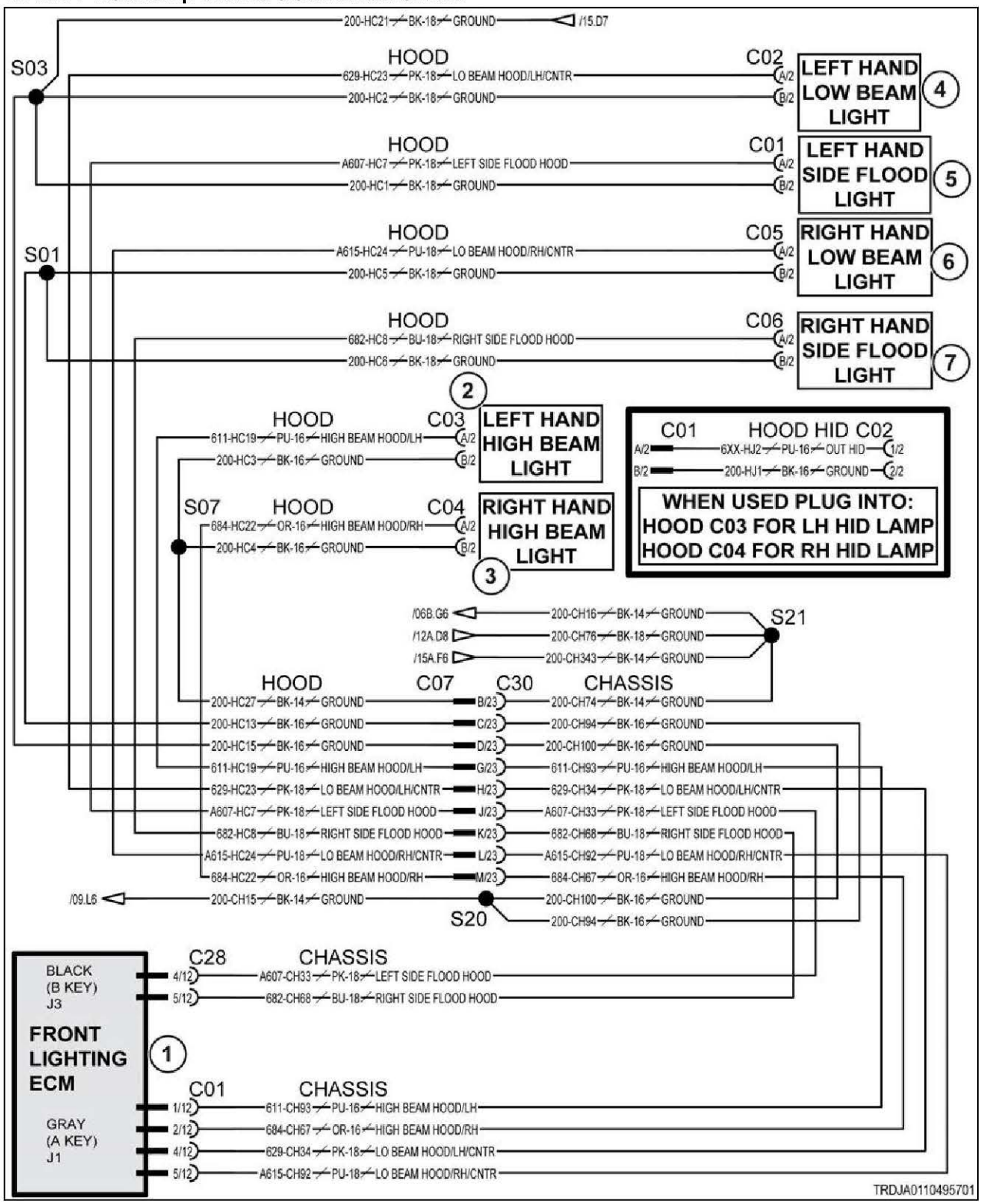

Fig. 694

Schematic legend		
Item	Schematic term	Description
1	FRONT LIGHTING ECM	Front lighting module
2	LEFT HAND HIGH BEAM LIGHT	Left-hand high beam lamp
3	RIGHT HAND HIGH BEAM LIGHT	Right-hand high beam lamp
4	LEFT HAND LOW BEAM LIGHT	Left-hand low beam lamp
5	LEFT HAND SIDE FLOOD LIGHT	Left-hand side flood lamp
6	RIGHT HAND LOW BEAM LIGHT	Right-hand low beam lamp
7	RIGHT HAND SIDE FLOOD LIGHT	Right-hand side flood lamp

10.17.9 Code SA 208 SPN 2653 FMI 06

Front lighting module has detected left-hand low beam current is above normal.

Diagnosis and solution

1. Check the harness for a short-circuit in the left-hand low beam circuit.

a) Turn the key start switch to the off position.
b) Turn the battery disconnect switch to the off position.
c) Remove the key from the battery disconnect switch.
d) Disconnect the harness connectors from the headlamps.
e) Disconnect harness connectors from the front lighting module.
f) Check resistance from front lighting module contact J1-4 to all other front lighting module contacts.

Result

Expected result - resistance is more than 5000 ohms.

Results:

- Yes - resistance is more than 5000 ohms.

  see step 2, page 10-1216
- No - resistance is not more than 5000 ohms.

  Repair or replace the harness.

  see step 2, page 10-1216

2. Check if the diagnostic code remains.

a) Check and clean the harness connector contacts.
b) Connect all the connectors.
c) Turn the battery disconnect switch to the on position.
d) Turn the key start switch to the on position.
e) Operate the machine at low idle.
f) Check if the diagnostic code remains.

Result

Expected result - the diagnostic code is not active.

Results:

- Yes - SPN 2653 FMI 06 is not active.

  Stop.

- No - SPN 2653 FMI 06 is active.

  Failure of the module is possible but not common. Exit the procedure and do the procedure again. If the diagnostic code remains active, replace the module.

  Stop.

10.17.9.1 Headlamp circuits electrical schematic

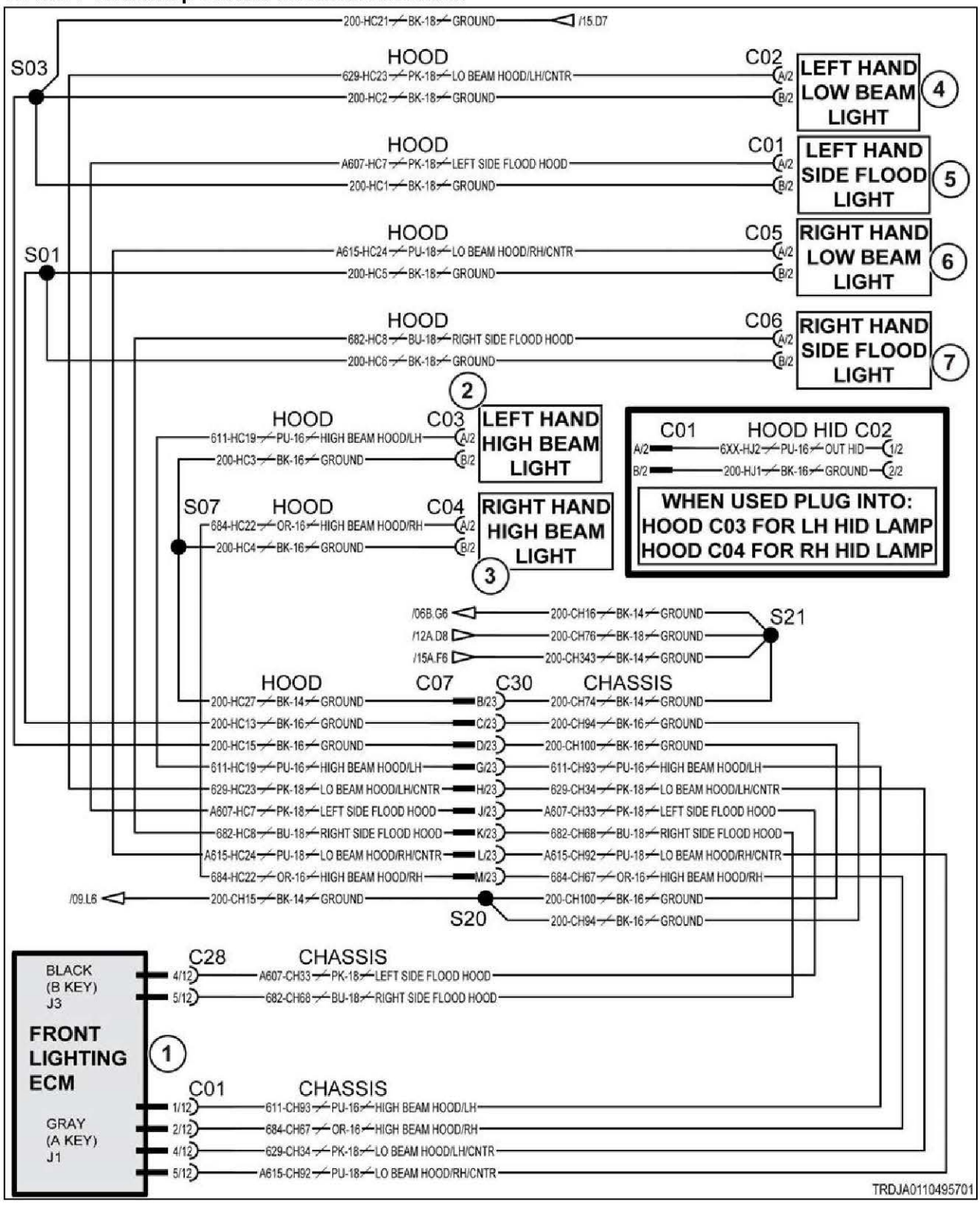

Fig. 695

Schematic legend		
Item	Schematic term	Description
1	FRONT LIGHTING ECM	Front lighting module
2	LEFT HAND HIGH BEAM LIGHT	Left-hand high beam lamp
3	RIGHT HAND HIGH BEAM LIGHT	Right-hand high beam lamp
4	LEFT HAND LOW BEAM LIGHT	Left-hand low beam lamp
5	LEFT HAND SIDE FLOOD LIGHT	Left-hand side flood lamp
6	RIGHT HAND LOW BEAM LIGHT	Right-hand low beam lamp
7	RIGHT HAND SIDE FLOOD LIGHT	Right-hand side flood lamp

10.17.10 Code SA 208 SPN 2655 FMI 05

Front lighting module has detected right-hand low beam current is below normal.

Diagnosis and solution

1. Check for an open circuit in the harness.

a) Turn the key start switch to the off position.
b) Turn the battery disconnect switch to the off position.
c) Remove the key from the battery disconnect switch.
d) Disconnect the harness connectors from the headlamps.
e) Disconnect harness connectors from the front lighting module.
f) Put a jumper wire from contact A to contact B on the right-hand low beam connector.
g) Check resistance from contact J1-5 to J3-10 on the front lighting module.

Result

Expected result - resistance is less than 5 ohms.

Results:

- Yes - resistance is less than 5 ohms.

  see step 2, page 10-1218
- No - resistance is not less than 5 ohms.

  Repair or replace the harness.

  see step 2, page 10-1218

2. Check if the diagnostic code remains.

a) Check and clean the harness connector contacts.
b) Connect all the connectors.
c) Turn the battery disconnect switch to the on position.
d) Turn the key start switch to the on position.
e) Operate the machine at low idle.
f) Check if the diagnostic code remains.

Result

Expected result - the diagnostic code is not active.

Results:

- Yes - SPN 2655 FMI 05 is not active.

  Stop.

- No - SPN 2655 FMI 05 is active.

  Failure of the module is possible but not common. Exit the procedure and do the procedure again. If the diagnostic code remains active, replace the module.

  Stop.

10.17.10.1 Headlamp circuits electrical schematic

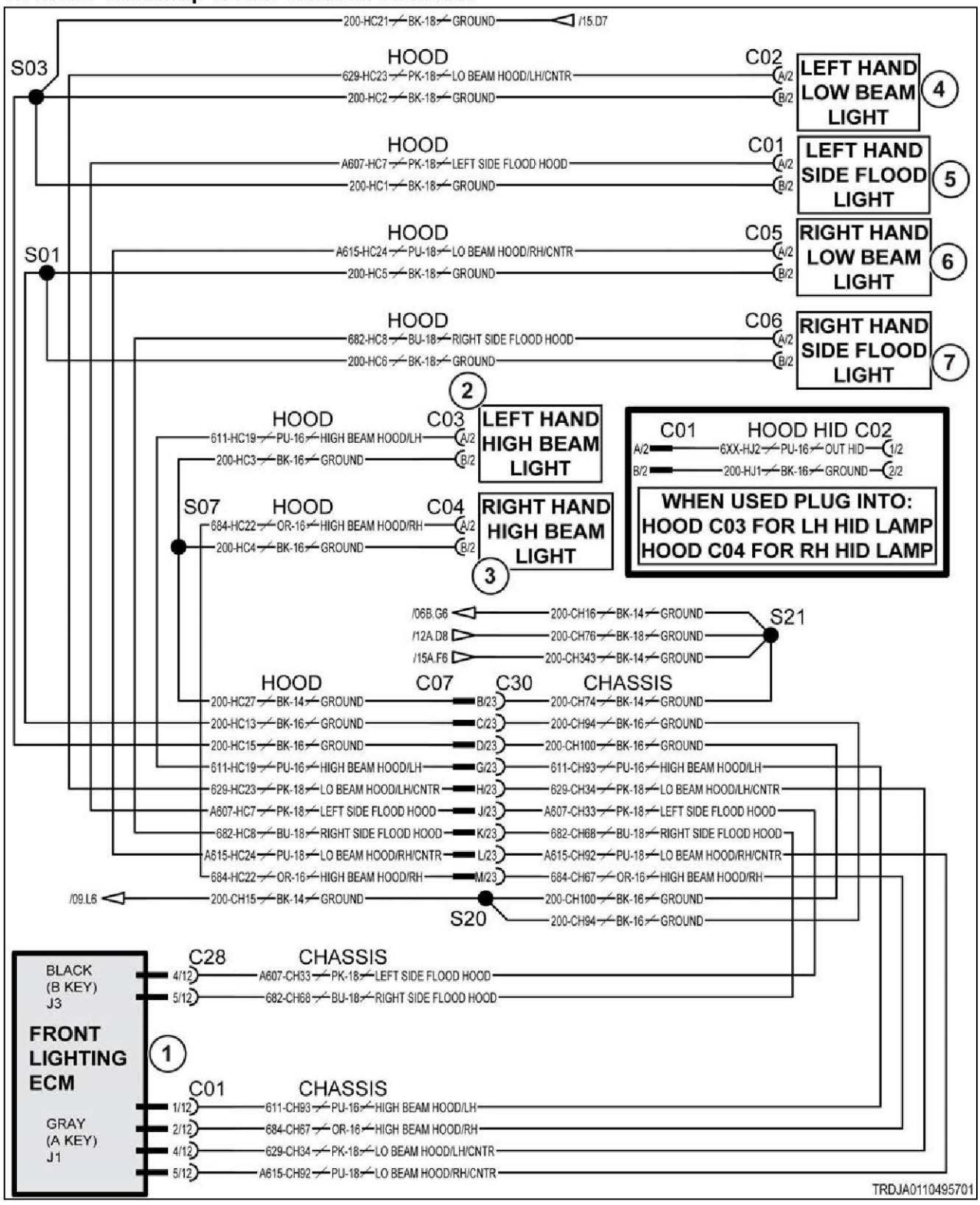

Fig. 696

Schematic legend		
Item	Schematic term	Description
1	FRONT LIGHTING ECM	Front lighting module
2	LEFT HAND HIGH BEAM LIGHT	Left-hand high beam lamp
3	RIGHT HAND HIGH BEAM LIGHT	Right-hand high beam lamp
4	LEFT HAND LOW BEAM LIGHT	Left-hand low beam lamp
5	LEFT HAND SIDE FLOOD LIGHT	Left-hand side flood lamp
6	RIGHT HAND LOW BEAM LIGHT	Right-hand low beam lamp
7	RIGHT HAND SIDE FLOOD LIGHT	Right-hand side flood lamp

10.17.11 Code SA 208 SPN 2655 FMI 06

Front lighting module has detected right-hand low beam current is above normal.

Diagnosis and solution

1. Check the harness for a short circuit in the left-hand low beam circuit.

a) Turn the key start switch to the off position.
b) Turn the battery disconnect switch to the off position.
c) Remove the key from the battery disconnect switch.
d) Disconnect the harness connectors from the headlamps.
e) Disconnect harness connectors from the front lighting module.
f) Check resistance from front lighting module contact J1-5 to all other front lighting module contacts.

Result

Expected result - resistance is more than 5000 ohms.

Results:

- Yes - resistance is more than 5000 ohms.

  see step 2, page 10-1220
- No - resistance is not more than 5000 ohms.

  Repair or replace the harness.

  see step 2, page 10-1220

2. Check if the diagnostic code remains.

a) Check and clean the harness connector contacts.
b) Connect all the connectors.
c) Turn the battery disconnect switch to the on position.
d) Turn the key start switch to the on position.
e) Operate the machine at low idle.
f) Check if the diagnostic code remains.

Result

Expected result - the diagnostic code is not active.

Results:

- Yes - SPN 2655 FMI 06 is not active.

  Stop.

- No - SPN 2655 FMI 06 is active.

  Failure of the module is possible but not common. Exit the procedure and do the procedure again. If the diagnostic code remains active, replace the module.

  Stop.

10.17.11.1 Headlamp circuits electrical schematic

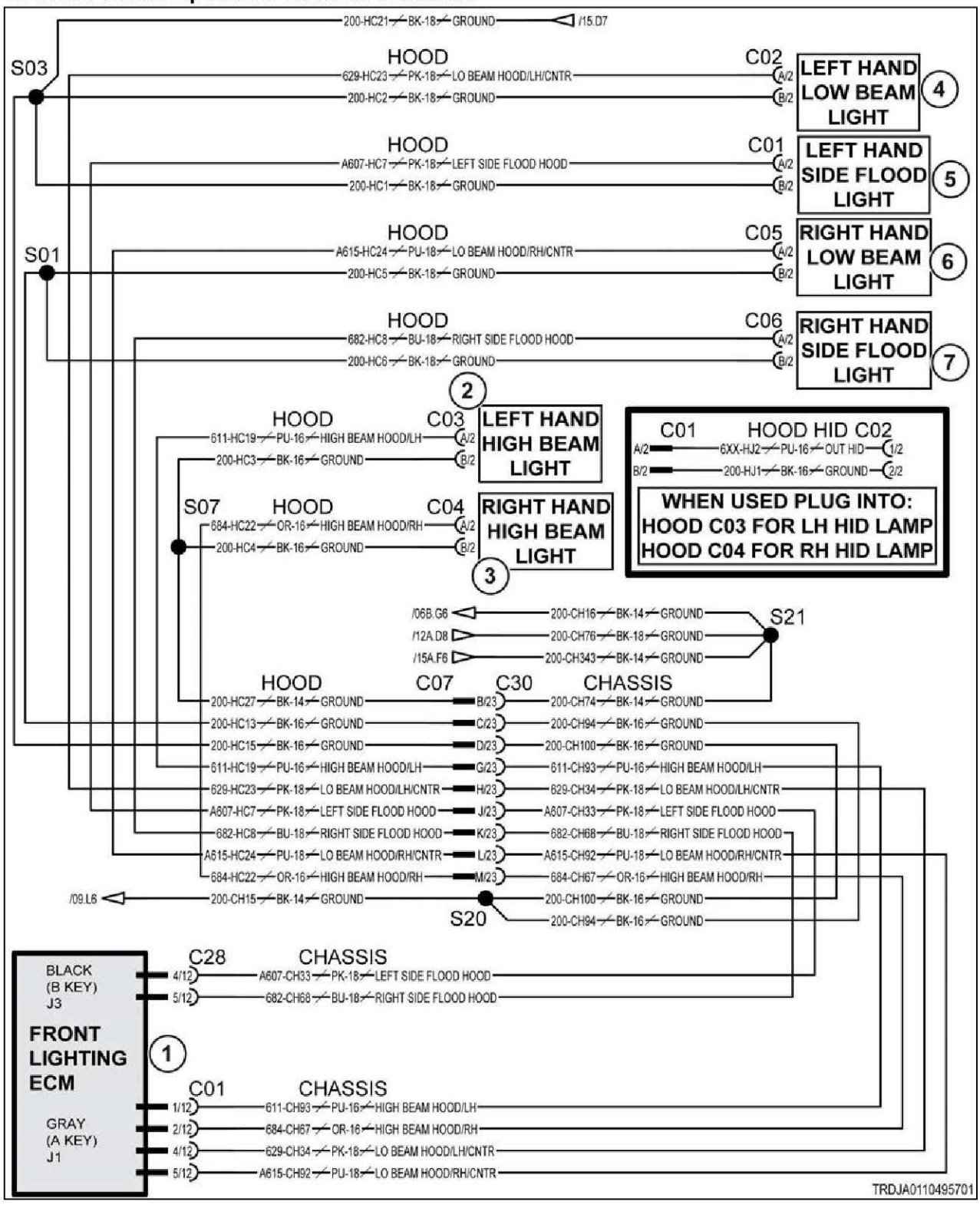

Fig. 697

Schematic legend		
Item	Schematic term	Description
1	FRONT LIGHTING ECM	Front lighting module
2	LEFT HAND HIGH BEAM LIGHT	Left-hand high beam lamp
3	RIGHT HAND HIGH BEAM LIGHT	Right-hand high beam lamp
4	LEFT HAND LOW BEAM LIGHT	Left-hand low beam lamp
5	LEFT HAND SIDE FLOOD LIGHT	Left-hand side flood lamp
6	RIGHT HAND LOW BEAM LIGHT	Right-hand low beam lamp
7	RIGHT HAND SIDE FLOOD LIGHT	Right-hand side flood lamp

10.17.12 Code SA 208 SPN 4011 FMI 05

Front lighting module has detected high beam current is below normal.

Diagnosis and solution

1. Check for an open circuit in the harness.

a) Turn the key start switch to the off position.
b) Turn the battery disconnect switch to the off position.
c) Remove the key from the battery disconnect switch.
d) Disconnect the harness connectors from the headlamps.
e) Disconnect harness connectors from the front lighting module.
f) Put a jumper wire from contact A to contact B on the left-hand high beam connector.
g) Check resistance from contact J1-1 to contact J3-10 on the front lighting module.
h) Put the jumper wire from contact A to contact B on the right-hand high beam connector.
i) Check resistance from contact J1-2 to contact J3-10 on the front lighting module.

Result

Expected result - each resistance is less than 5 ohms.

Results:

- Yes - each resistance is less than 5 ohms.

  see step 2, page 10-1222
- No - one or more resistance is not less than 5 ohms.

  Repair or replace the harness.

  see step 2, page 10-1222

2. Check if the diagnostic code remains.

a) Check and clean the harness connector contacts.
b) Connect all the connectors.
c) Turn the battery disconnect switch to the on position.
d) Turn the key start switch to the on position.
e) Operate the machine at low idle.
f) Check if the diagnostic code remains.

Result

Expected result - the diagnostic code is not active.

Results:

- Yes - SPN 4011 FMI 05 is not active.

  Stop.

- No - SPN 4011 FMI 05 is active.

  Failure of the module is possible but not common. Exit the procedure and do the procedure again. If the diagnostic code remains active, replace the module.

  Stop.

10.17.12.1 Headlamp circuits electrical schematic

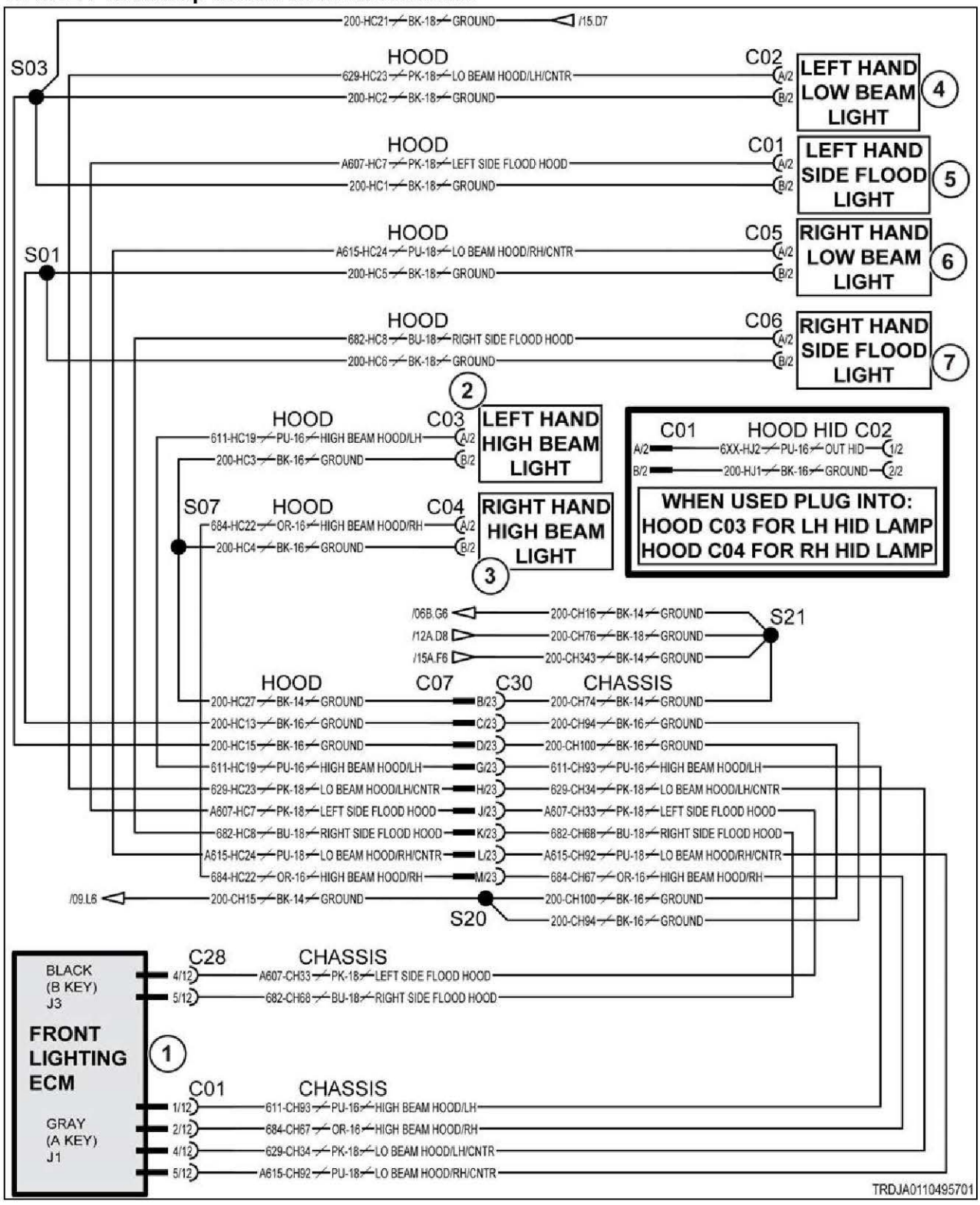

Fig. 698

Schematic legend		
Item	Schematic term	Description
1	FRONT LIGHTING ECM	Front lighting module
2	LEFT HAND HIGH BEAM LIGHT	Left-hand high beam lamp
3	RIGHT HAND HIGH BEAM LIGHT	Right-hand high beam lamp
4	LEFT HAND LOW BEAM LIGHT	Left-hand low beam lamp
5	LEFT HAND SIDE FLOOD LIGHT	Left-hand side flood lamp
6	RIGHT HAND LOW BEAM LIGHT	Right-hand low beam lamp
7	RIGHT HAND SIDE FLOOD LIGHT	Right-hand side flood lamp

10.17.13 Code SA 208 SPN 4011 FMI 06

Front lighting module has detected high beam current is above normal.

Diagnosis and solution

1. Check for a short circuit in the high beam circuit.

a) Turn the key start switch to the off position.
b) Turn the battery disconnect switch to the off position.
c) Remove the key from the battery disconnect switch.
d) Disconnect the harness connectors from the headlamps.
e) Disconnect harness connectors from the front lighting module.
f) Check resistance from front lighting module contact J1-1 to all other front lighting module contacts.
g) Check resistance from front lighting module contact J1-2 to all other front lighting module contacts.

Result

Expected result - each resistance is more than 5000 ohms.

Results:

- Yes - each resistance is more than 5000 ohms.

  see step 2, page 10-1224
- No - one or more resistance is not more than 5000 ohms.

  Repair or replace the harness.

  see step 2, page 10-1224

2. Check if the diagnostic code remains.

a) Inspect and clean the harness connector contacts.
b) Connect all the connectors.
c) Turn the battery disconnect switch to the on position.
d) Turn the key start switch to the on position.
e) Operate the machine at low idle.
f) Check if the diagnostic code remains.

Result

Expected result - the diagnostic code is not active.

Results:

- Yes - SPN 4011 FMI 06 is not active.

  Stop.

- No - SPN 4011 FMI 06 is active.

  Failure of the module is possible but not common. Exit the procedure and do the procedure again. If the diagnostic code remains active, replace the module.

  Stop.

10.17.13.1 Headlamp circuits electrical schematic

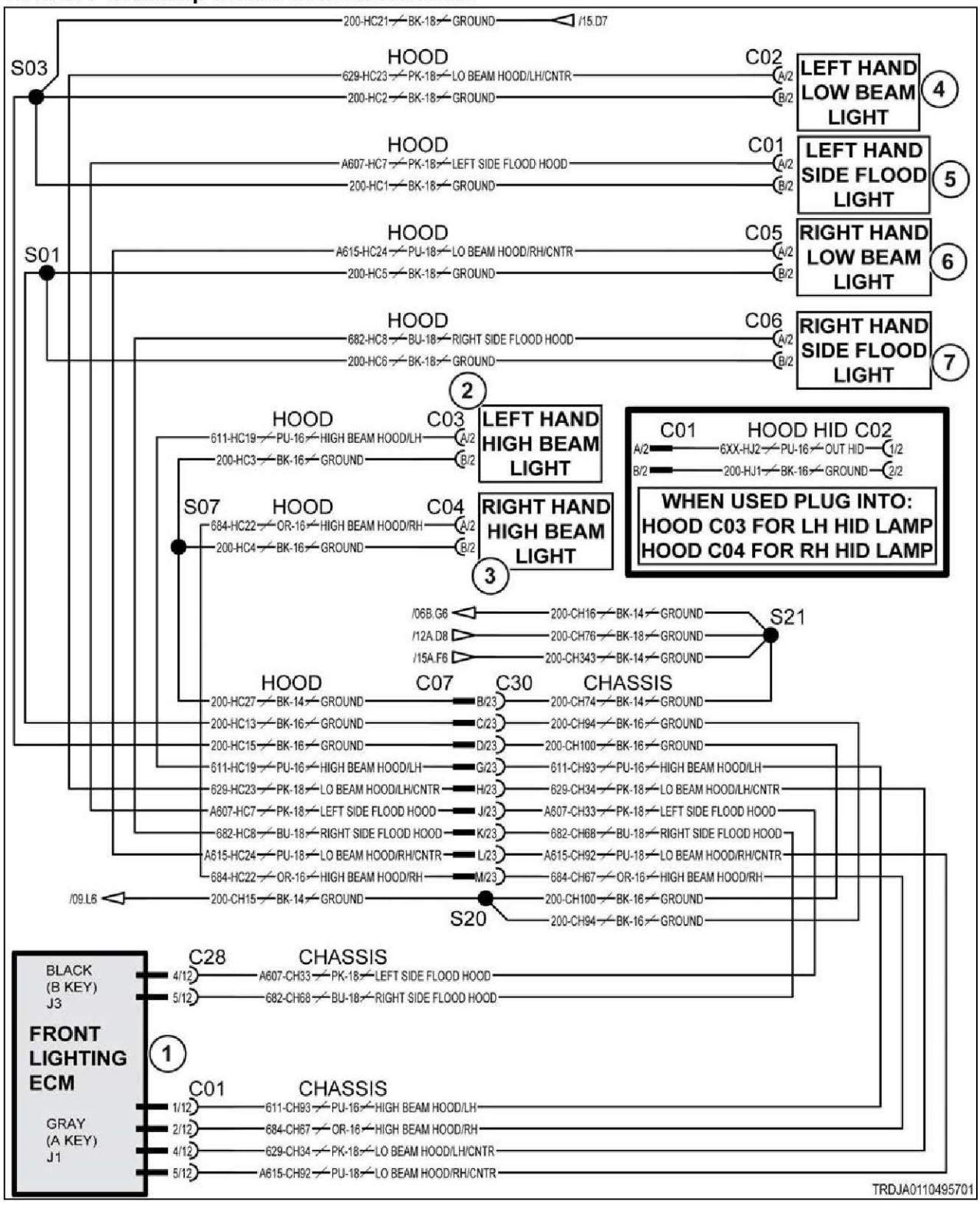

Fig. 699

Schematic legend		
Item	**Schematic term**	**Description**
1	FRONT LIGHTING ECM	Front lighting module
2	LEFT HAND HIGH BEAM LIGHT	Left-hand high beam lamp
3	RIGHT HAND HIGH BEAM LIGHT	Right-hand high beam lamp
4	LEFT HAND LOW BEAM LIGHT	Left-hand low beam lamp
5	LEFT HAND SIDE FLOOD LIGHT	Left-hand side flood lamp
6	RIGHT HAND LOW BEAM LIGHT	Right-hand low beam lamp
7	RIGHT HAND SIDE FLOOD LIGHT	Right-hand side flood lamp

10.18 209 Roof lighting module

10.18.1 Code SA 209 SPN 2362 FMI 05

Roof lighting module has detected flood lamps current is below normal.

Diagnosis and solution

1. Check for an open circuit in the right-hand flood lamps.
- a) Turn the key start switch to the off position.
- b) Turn the battery disconnect switch to the off position.
- c) Remove the key from the battery disconnect switch.
- d) Disconnect the harness connectors from the roof lighting module.
- e) Check resistance from contact J1-2 to contact J3-10 on the roof lighting module.
- f) Check resistance from contact J1-12 to contact J3-10 on the roof lighting module.
- g) Check resistance from contact J1-7 to contact J3-10 on the roof lighting module.

Result

Expected result - each resistance is less than 5 ohms.

Results:

- Yes - each resistance is less than 5 ohms.

  see step 2, page 10-1227
- No - one or more resistance is not less than 5 ohms.

  Repair or replace the harness.

  see step 3, page 10-1227

2. Check for an open circuit in the left-hand flood lamps.
- a) Turn the key start switch to the off position.
- b) Turn the battery disconnect switch to the off position.
- c) Remove the key from the battery disconnect switch.
- d) Disconnect the harness connectors from the roof lighting module.
- e) Check resistance from contact J1-6 to contact J3-10 on the roof lighting module.
- f) Check resistance from contact J1-1 to contact J3-10 on the roof lighting module.
- g) Check resistance from contact J1-3 to contact J3-10 on the roof lighting module.

Result

Expected result - each resistance is less than 5 ohms.

Results:

- Yes - each resistance is less than 5 ohms.

  see step 3, page 10-1227
- No - one or more resistance is not less than 5 ohms.

  Repair or replace the harness.

  see step 3, page 10-1227

3. Check if the diagnostic code remains.
- a) Inspect and clean the harness connector contacts.
- b) Connect all the connectors.
- c) Turn the battery disconnect switch to the on position.
- d) Turn the key start switch to the on position.
- e) Operate the machine at low idle.
- f) Check if the diagnostic code remains.

Result

Expected result - the diagnostic code is not active.

Results:

- Yes - SPN 2362 FMI 05 is not active.

  Stop.
- No - SPN 2362 FMI 05 is active.

  Failure of the module is possible but not common. Exit the procedure and do the procedure again. If the diagnostic code remains active, replace the module.

  Stop.

10.18.1.1 Front lighting electrical schematic

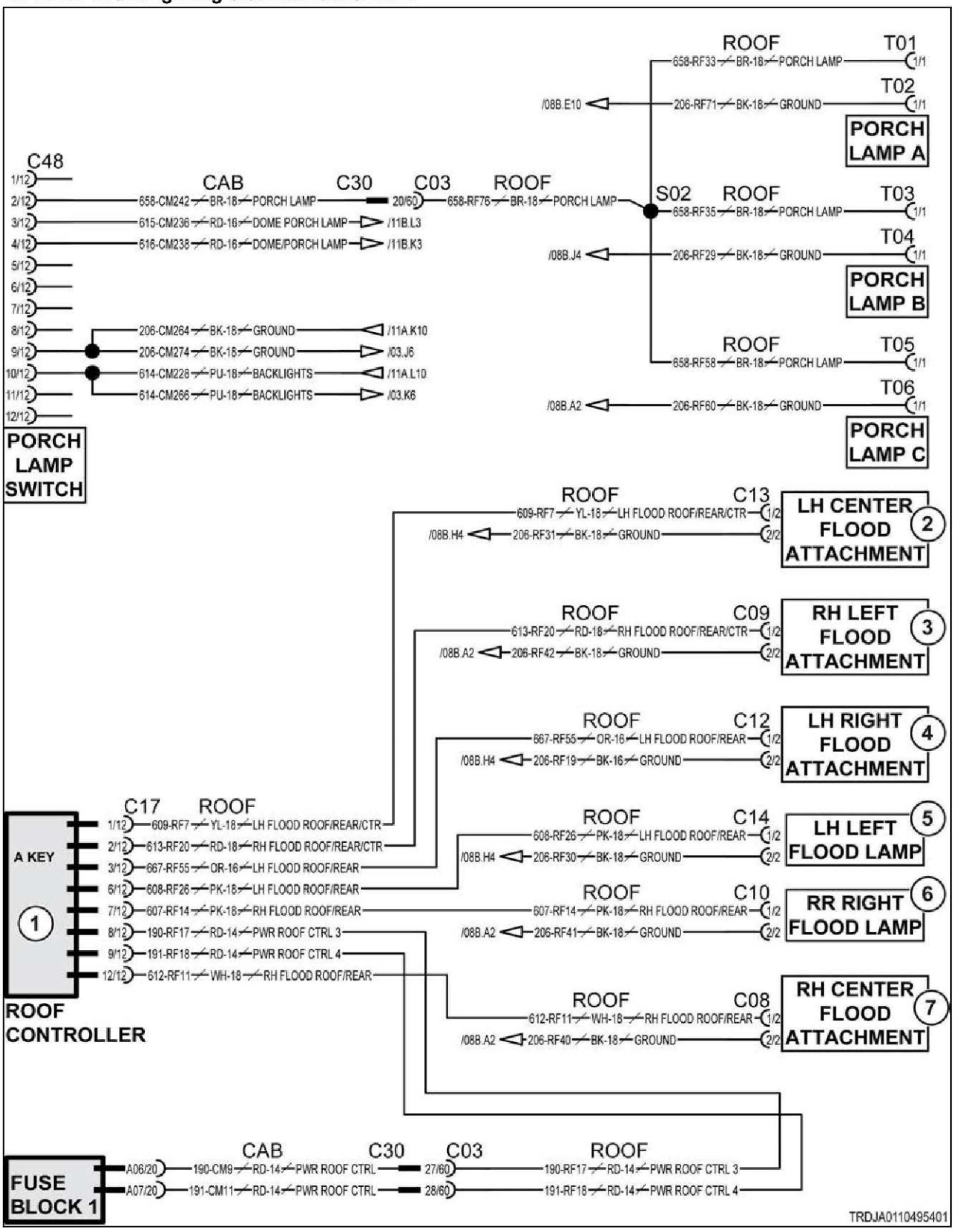

Fig. 700

Schematic legend		
Item	Schematic term	Description
1	ROOF CONTROLLER	Roof lighting module
2	LH CENTER FLOOD ATTACHMENT	Left-hand center flood rear attachment
3	RH LEFT FLOOD ATTACHMENT	Right-hand left flood rear attachment
4	LH RIGHT FLOOD ATTACHMENT	Left-hand right flood rear attachment
5	LH LEFT FLOOD LAMP	Left-hand left flood rear lamp
6	RR RIGHT FLOOD LAMP	Right-hand right flood rear lamp
7	RH CENTER FLOOD ATTACHMENT	Right-hand center flood rear attachment

10.18.2 Code SA 209 SPN 2362 FMI 06

Roof lighting module has detected current is above normal.

Diagnosis and solution

1. Check for a short-circuit in the right-hand flood lamps.

a) Turn the key start switch to the off position.
b) Turn the battery disconnect switch to the off position.
c) Remove the key from the battery disconnect switch.
d) Disconnect the harness connectors from the roof lighting module.
e) Check resistance from contact J1-2 to contact J3-10 on the roof lighting module.
f) Check resistance from contact J1-12 to contact J3-10 on the roof lighting module.
g) Check resistance from contact J1-7 to contact J3-10 on the roof lighting module.

Result

Expected result - each resistance is more than 5000 ohms.

Results:

- Yes - each resistance is more than 5000 ohms.

  see step 2, page 10-1230
- No - one or more resistance is not more than 5000 ohms.

  Repair or replace the harness.

  see step 3, page 10-1231

2. Check for a short-circuit in the left-hand flood lamps.

a) Turn the key start switch to the off position.
b) Turn the battery disconnect switch to the off position.
c) Remove the key from the battery disconnect switch.
d) Disconnect the harness connectors from the roof lighting module.
e) Check resistance from contact J1-6 to contact J3-10 on the roof lighting module.
f) Check resistance from contact J1-1 to contact J3-10 on the roof lighting module.
g) Check resistance from contact J1-3 to contact J3-10 on the roof lighting module.

Result

Expected result - each resistance is more than 5000 ohms.

Results:

- Yes - each resistance is more than 5000 ohms.

  see step 3, page 10-1231

- No - one or more resistance is not more than 5000 ohms.

  Repair or replace the harness.

  see step 3, page 10-1231

3. Check if the diagnostic code remains.

a) Check and clean the harness connector contacts.
b) Connect all the connectors.
c) Turn the battery disconnect switch to the on position.
d) Turn the key start switch to the on position.
e) Operate the machine at low idle.
f) Check if the diagnostic code remains.

Result

Expected result - the diagnostic code is not active.

Results:

- Yes - SPN 2362 FMI 06 is not active.

  Stop.
- No - SPN 2362 FMI 06 is active.

  Failure of the module is possible but not common. Exit the procedure and do the procedure again. If the diagnostic code remains active, replace the module.

  Stop.

10.18.2.1 Front lighting electrical schematic

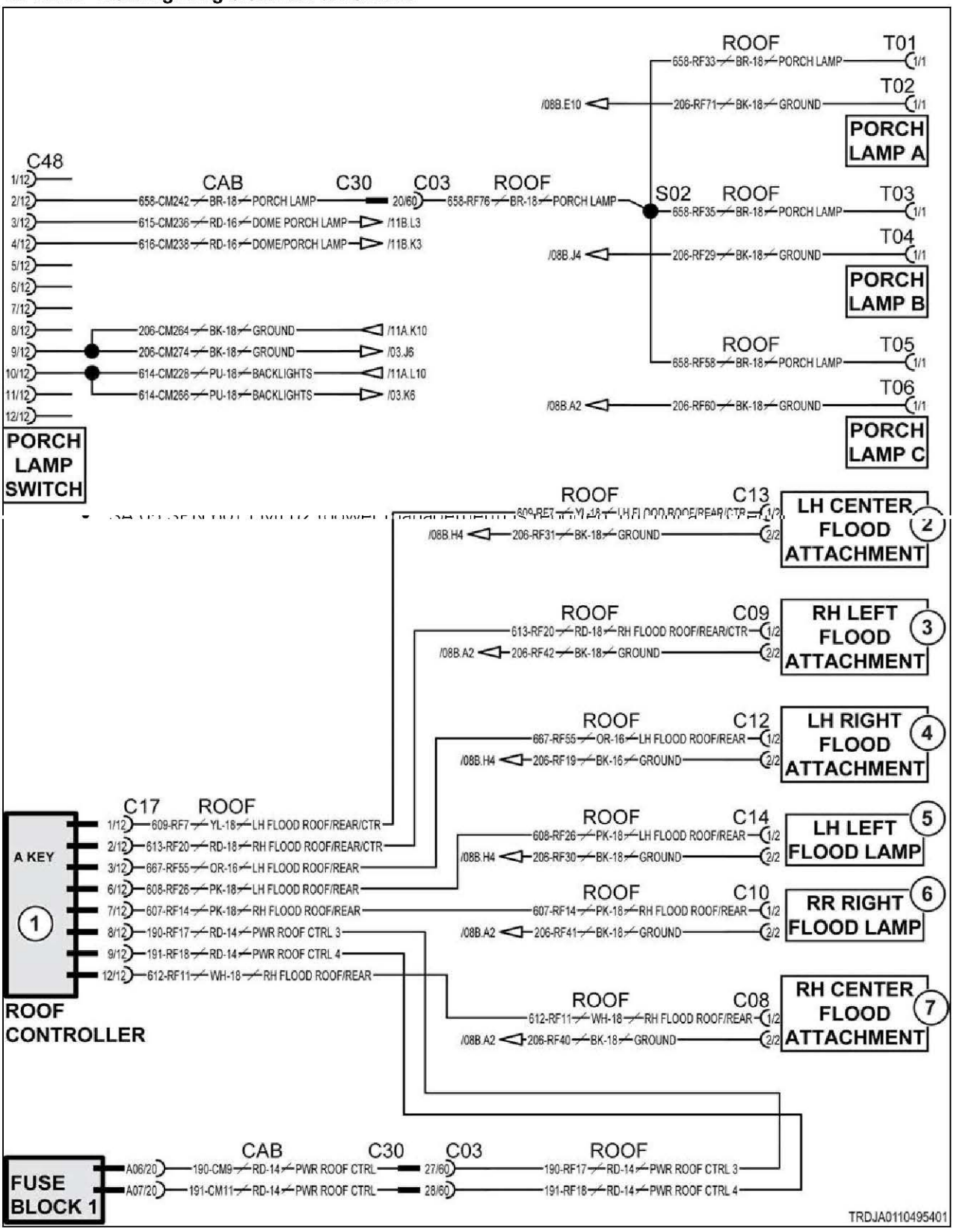

Fig. 701

Schematic legend		
Item	Schematic term	Description
1	ROOF CONTROLLER	Roof lighting module
2	LH CENTER FLOOD ATTACHMENT	Left-hand center flood rear attachment
3	RH LEFT FLOOD ATTACHMENT	Right-hand left flood rear attachment
4	LH RIGHT FLOOD ATTACHMENT	Left-hand right flood rear attachment
5	LH LEFT FLOOD LAMP	Left-hand left flood rear lamp
6	RR RIGHT FLOOD LAMP	Right-hand right flood rear lamp
7	RH CENTER FLOOD ATTACHMENT	Right-hand center flood rear attachment

10.18.3 Code SA 209 SPN 2368 FMI 05

Roof lighting module has detected current is below normal.

Diagnosis and solution

1. Check for an open circuit in the harness.

a) Turn the key start switch to the off position.
b) Turn the battery disconnect switch to the off position.
c) Remove the key from the battery disconnect switch.
d) Disconnect the harness connectors from the turn signal lamps and the roof lighting module.
e) Put a jumper wire from contact A to contact G on the left-hand turn signal connector.
f) Check resistance from contact J3-4 to contact J3-10 on the roof lighting module.

Result

Expected result - resistance is less than 5 ohms.

Results:

- Yes - resistance is less than 5 ohms.

  see step 2, page 10-1233
- No - resistance is not less than 5 ohms.

  Repair or replace the harness.

  see step 2, page 10-1233

2. Check if the diagnostic code remains.

a) Check and clean the harness connector contacts.
b) Connect all the connectors.
c) Turn the battery disconnect switch to the on position.
d) Turn the key start switch to the on position.
e) Operate the machine at low idle.
f) Check if the diagnostic code remains.

Result

Expected result - the diagnostic code is not active.

Results:

- Yes - SPN 2368 FMI 05 is not active.

  Stop.

- No - SPN 2368 FMI 05 is active.

  Failure of the module is possible but not common. Exit the procedure and do the procedure again. If the diagnostic code remains active, replace the module.

  Stop.

10.18.3.1 Turn signal electrical schematic

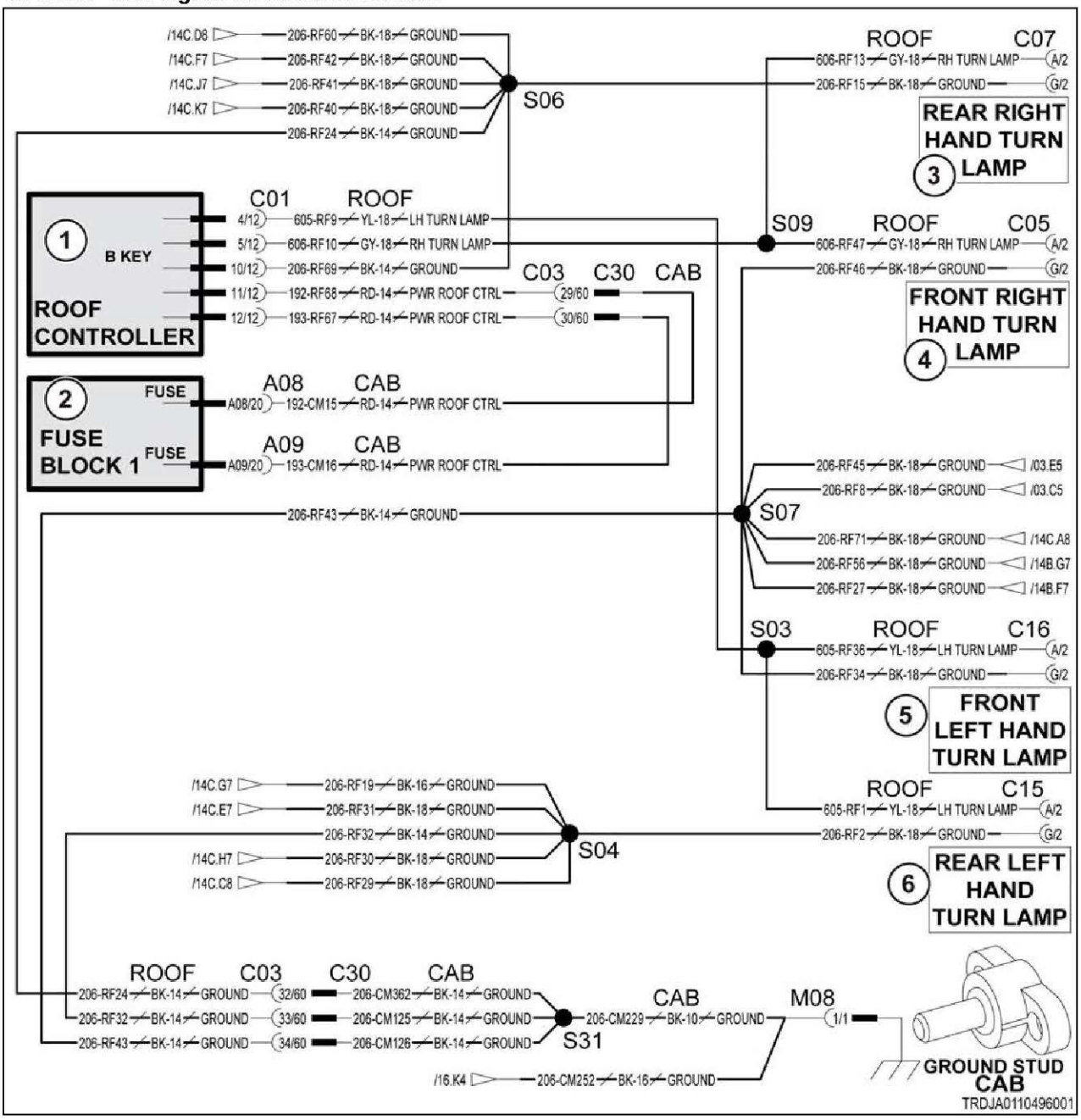

Fig. 702

Schematic legend		
Item	**Schematic term**	**Description**
1	ROOF CONTROLLER	Roof controller
2	FUSE BLOCK 1	Fuse block 1
3	REAR RIGHT HAND TURN LAMP	Right-hand rear turn lamp

Schematic legend		
Item	Schematic term	Description
4	FRONT RIGHT HAND TURN LAMP	Right-hand front turn lamp
5	FRONT LEFT HAND TURN LAMP	Left-hand front turn lamp
6	REAR LEFT HAND TURN LAMP	Left-hand rear turn lamp
--	PWR ROOF CTRL	Power to roof controller
--	LH TURN LAMP	Left-hand turn lamp
--	RH TURN LAMP	Right-hand turn lamp

10.18.4 Code SA 209 SPN 2368 FMI 06

Roof lighting module has detected current is above normal.

Diagnosis and solution

1. Check for a short circuit in the harness.

a) Turn the key start switch to the off position.
b) Turn the battery disconnect switch to the off position.
c) Remove the key from the battery disconnect switch.
d) Disconnect the harness connectors from the turn signal lamps and the roof lighting module.
e) Check resistance from roof lighting module contact J3-4 to all other roof lighting module contacts.

Result

Expected result - each resistance is more than 5000 ohms.

Results:

- Yes - each resistance is more than 5000 ohms.

  see step 2, page 10-1235
- No - one or more resistance is not more than 5000 ohms.

  Repair or replace the harness.

  see step 2, page 10-1235

2. Check if the diagnostic code remains.

a) Check and clean the harness connector contacts.
b) Connect all the connectors.
c) Turn the battery disconnect switch to the on position.
d) Turn the key start switch to the on position.
e) Operate the machine at low idle.
f) Check if the diagnostic code remains.

Result

Expected result - the diagnostic code is not active.

Results:

- Yes - SPN 2368 FMI 06 is not active.

  Stop.
- No - SPN 2368 FMI 06 is active.

  Failure of the module is possible but not common. Exit the procedure and do the procedure again. If the diagnostic code remains active, replace the module.

  Stop.

10.18.4.1 Turn signal electrical schematic

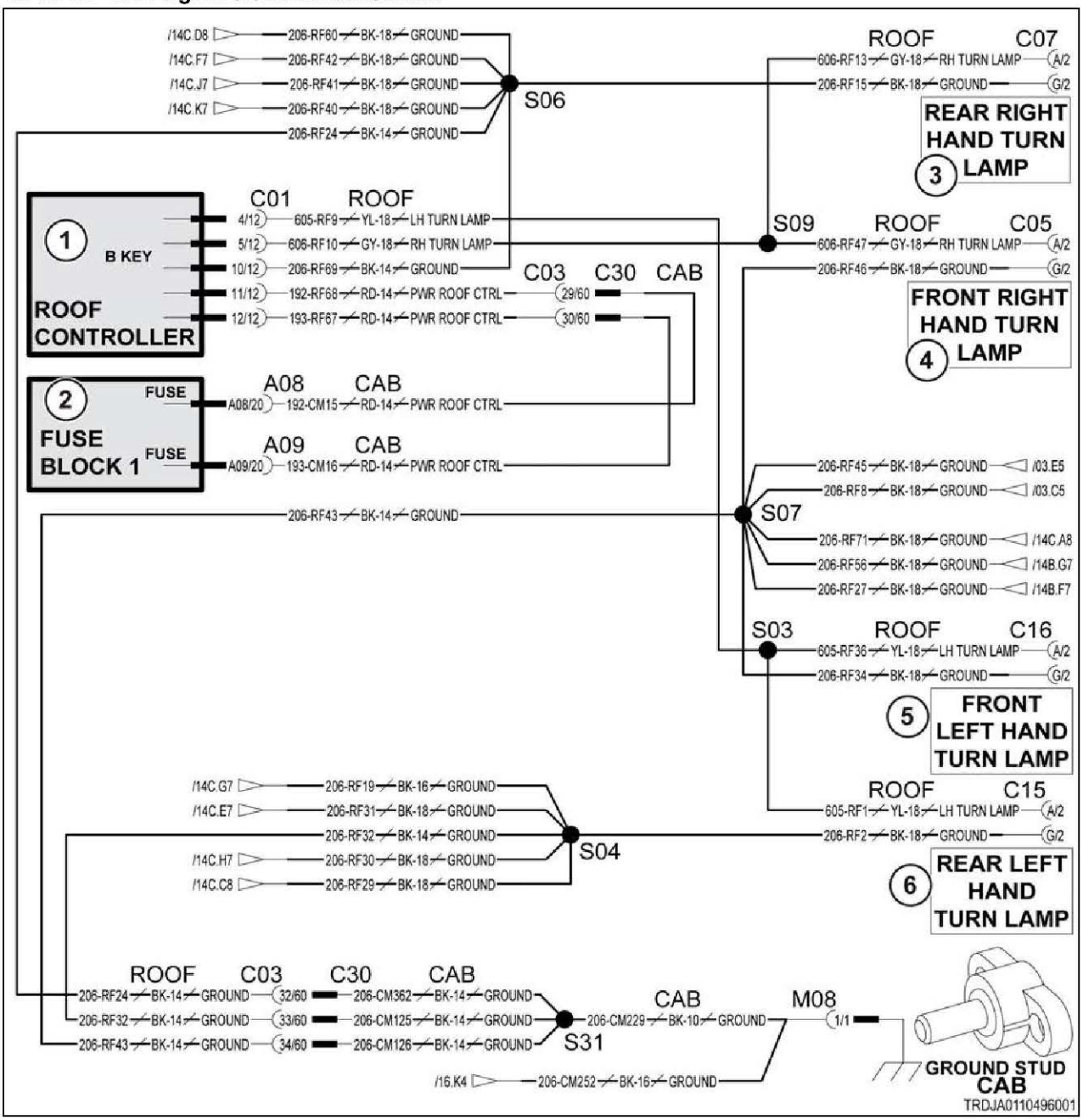

Fig. 703

Schematic legend		
Item	**Schematic term**	**Description**
1	ROOF CONTROLLER	Roof controller
2	FUSE BLOCK 1	Fuse block 1
3	REAR RIGHT HAND TURN LAMP	Right-hand rear turn lamp
4	FRONT RIGHT HAND TURN LAMP	Right-hand front turn lamp
5	FRONT LEFT HAND TURN LAMP	Left-hand front turn lamp
6	REAR LEFT HAND TURN LAMP	Left-hand rear turn lamp

Schematic legend		
Item	Schematic term	Description
--	PWR ROOF CTRL	Power to roof controller
--	LH TURN LAMP	Left-hand turn lamp
--	RH TURN LAMP	Right-hand turn lamp

10.18.5 Code SA 209 SPN 2370 FMI 05

Roof lighting module has detected current is below normal.

Diagnosis and solution

1. Check for a short-circuit in the right-hand lamp circuit.

a) Turn the key start switch to the off position.
b) Turn the battery disconnect switch to the off position.
c) Remove the key from the battery disconnect switch.
d) Disconnect the harness connectors from the turn signal lamps and the roof lighting module.
e) Put a jumper wire from contact A to contact G on the left-hand turn signal connector.
f) Check resistance from contact J3-5 to contact J3-10 on the roof lighting module.

Result

Expected result - resistance is less than 5 ohms.

Results:

- Yes - resistance is less than 5 ohms.

  see step 2, page 10-1237
- No - resistance is not less than 5 ohms.

  Repair or replace the harness.

  see step 2, page 10-1237

2. Check if the diagnostic code remains.

a) Check and clean the harness connector contacts.
b) Connect all the connectors.
c) Turn the battery disconnect switch to the on position.
d) Turn the key start switch to the on position.
e) Operate the machine at low idle.
f) Check if the diagnostic code remains.

Result

Expected result - the diagnostic code is not active.

Results:

- Yes - SPN 2370 FMI 05 is not active.

  Stop.
- No - SPN 2370 FMI 05 is active.

  Failure of the module is possible but not common. Exit the procedure and do the procedure again. If the diagnostic code remains active, replace the module.

  Stop.

10.18.5.1 Turn signal electrical schematic

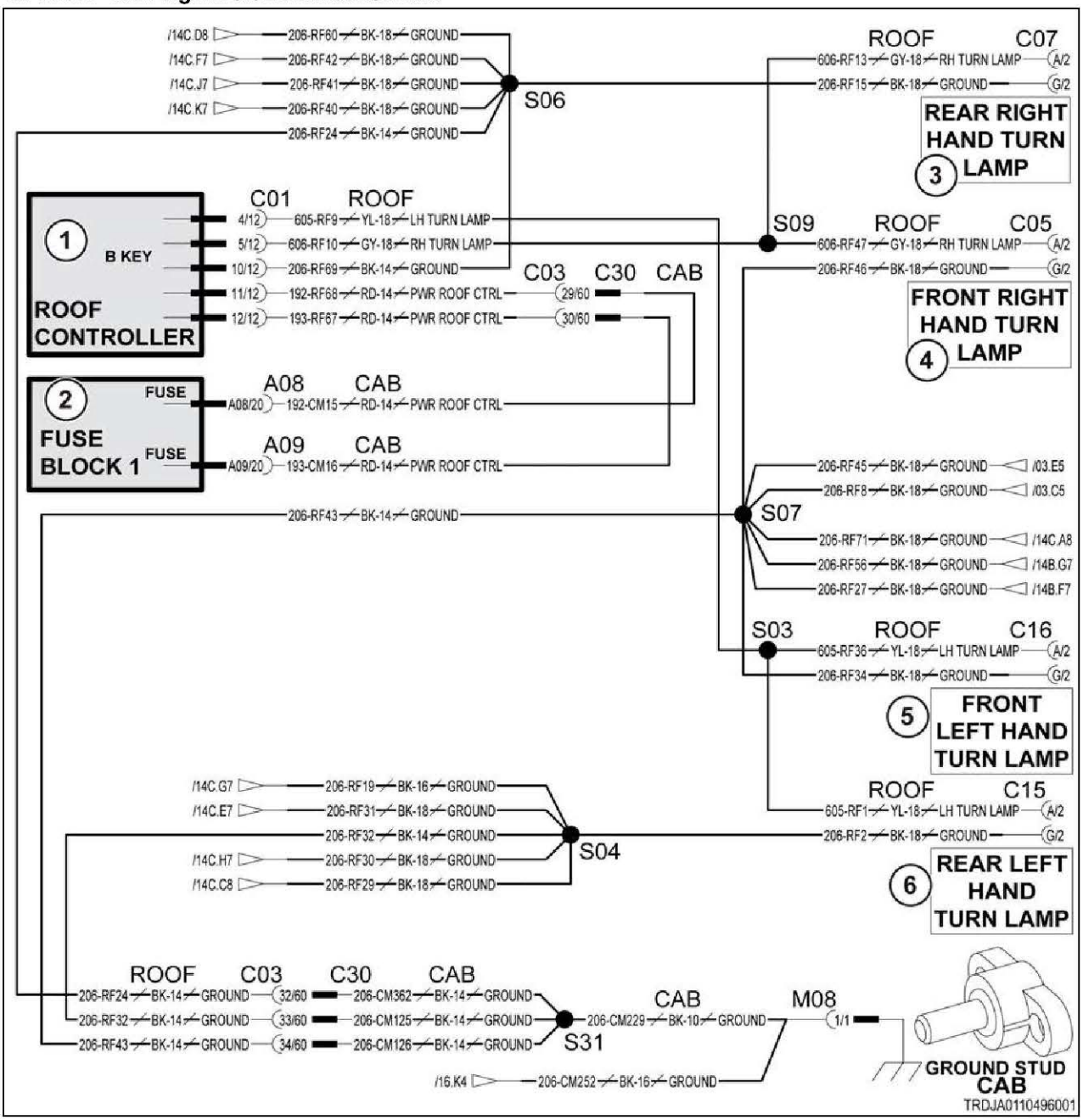

Fig. 704

Schematic legend		
Item	**Schematic term**	**Description**
1	ROOF CONTROLLER	Roof controller
2	FUSE BLOCK 1	Fuse block 1
3	REAR RIGHT HAND TURN LAMP	Right-hand rear turn lamp
4	FRONT RIGHT HAND TURN LAMP	Right-hand front turn lamp
5	FRONT LEFT HAND TURN LAMP	Left-hand front turn lamp
6	REAR LEFT HAND TURN LAMP	Left-hand rear turn lamp

Schematic legend		
Item	Schematic term	Description
--	PWR ROOF CTRL	Power to roof controller
--	LH TURN LAMP	Left-hand turn lamp
--	RH TURN LAMP	Right-hand turn lamp

10.18.6 Code SA 209 SPN 2370 FMI 06

Roof lighting module has detected current is above normal.

Diagnosis and solution

1. Check for a short-circuit in the right-hand lamp circuit.

a) Turn the key start switch to the off position.
b) Turn the battery disconnect switch to the off position.
c) Remove the key from the battery disconnect switch.
d) Disconnect the harness connectors from the turn signal lamps and the roof lighting module.
e) Check resistance from roof lighting module contact J3-5 to all other roof lighting module contacts.

Result

Expected result - each resistance is more than 5000 ohms.

Results:

- Yes - each resistance is more than 5000 ohms.

  see step 2, page 10-1239
- No - one or more resistance is not more than 5000 ohms.

  Repair or replace the harness.

  see step 2, page 10-1239

2. Check if the diagnostic code remains.

a) Check and clean the harness connector contacts.
b) Connect all the connectors.
c) Turn the battery disconnect switch to the on position.
d) Turn the key start switch to the on position.
e) Operate the machine at low idle.
f) Check if the diagnostic code remains.

Result

Expected result - the diagnostic code is not active.

Results:

- Yes - SPN 2370 FMI 06 is not active.

  Stop.
- No - SPN 2370 FMI 06 is active.

  Failure of the module is possible but not common. Exit the procedure and do the procedure again. If the diagnostic code remains active, replace the module.

  Stop.

10.18.6.1 Turn signal electrical schematic

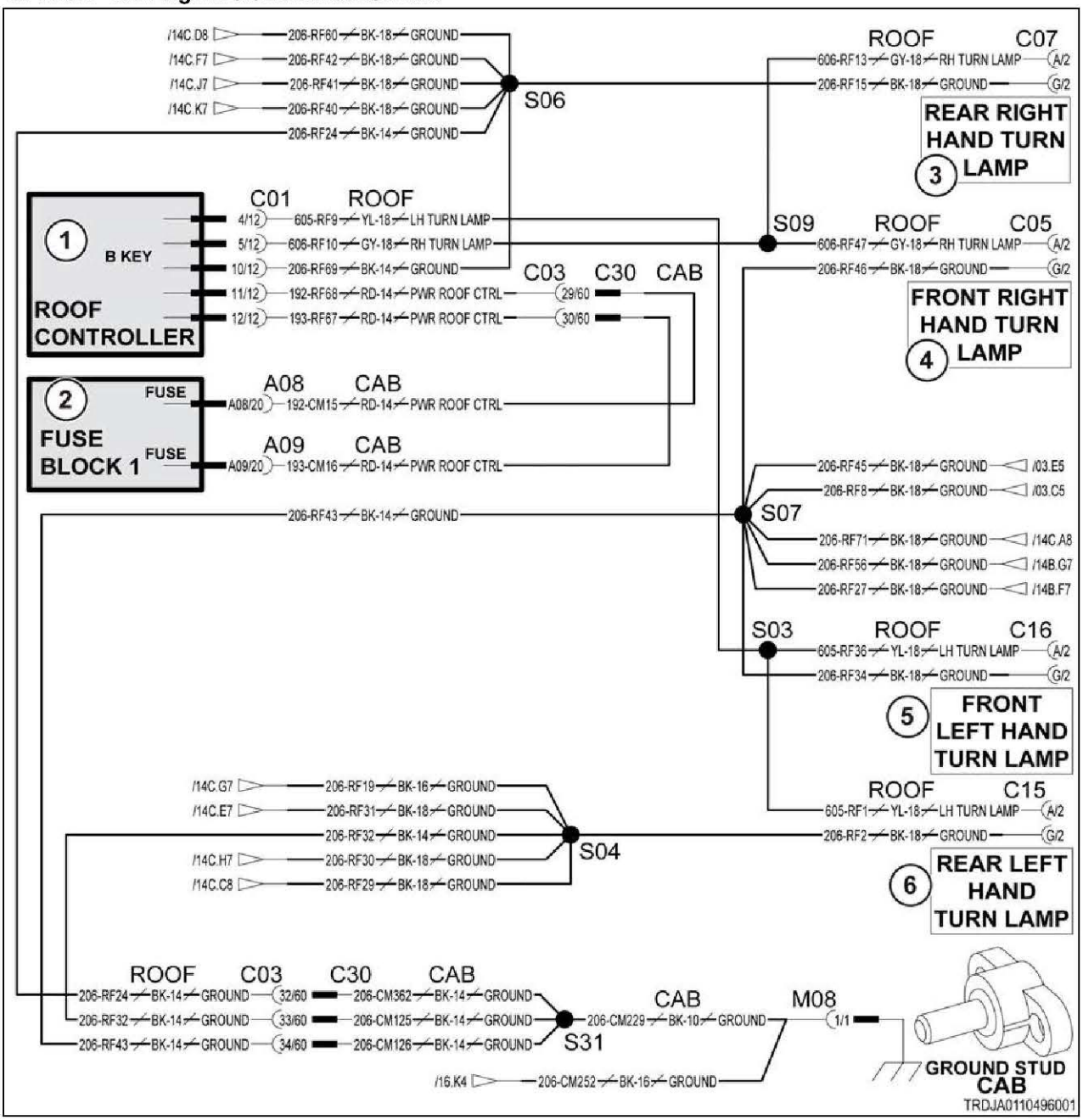

Fig. 705

Schematic legend		
Item	**Schematic term**	**Description**
1	ROOF CONTROLLER	Roof controller
2	FUSE BLOCK 1	Fuse block 1
3	REAR RIGHT HAND TURN LAMP	Right-hand rear turn lamp
4	FRONT RIGHT HAND TURN LAMP	Right-hand front turn lamp
5	FRONT LEFT HAND TURN LAMP	Left-hand front turn lamp
6	REAR LEFT HAND TURN LAMP	Left-hand rear turn lamp

Schematic legend		
Item	Schematic term	Description
--	PWR ROOF CTRL	Power to roof controller
--	LH TURN LAMP	Left-hand turn lamp
--	RH TURN LAMP	Right-hand turn lamp

10.18.7 Code SA 209 SPN 2209 FMI 02

Roof lighting module address erratic, intermittent, or incorrect.

Diagnosis and solution

1. Check for an open circuit in the harness.

a) Turn the key start switch to the off position.
b) Turn the battery disconnect switch to the off position.
c) Remove the key from the battery disconnect switch.
d) Disconnect the roof lighting module, beacon switch, hazard lamp switch, and flood switch from the main cab harness.
e) Check resistance from contact J2-11 to contact J3-9 on the roof lighting module.
f) Check resistance from contact J2-12 to contact J3-8 on the roof lighting module.
g) Put a jumper wire from beacon switch contact 1 to contact 4.
h) Check resistance from contact J2-11 to contact J2-12 on the roof lighting module.

Result

Expected result - each resistance is less than 5 ohms.

Results:

- Yes - each resistance is less than 5 ohms.

  see step 2, page 10-1241
- No - one or more resistance is not less than 5 ohms.

  Repair or replace the harness.

  see step 3, page 10-1242

2. Check for a short-circuit in the harness.

a) Turn the key start switch to the off position.
b) Turn the battery disconnect switch to the off position.
c) Remove the key from the battery disconnect switch.
d) Check resistance from roof lighting module contact J2-11 to all other roof lighting module contacts.
e) Check resistance from roof lighting module contact J2-12 to all other roof lighting module contacts.

Result

Expected result - each resistance is more than 5000 ohms.

Results:

- Yes - each resistance is more than 5000 ohms.

  see step 3, page 10-1242
- No - one or more resistance is not more than 5000 ohms.

  Repair or replace the harness.

  see step 3, page 10-1242

3. Check if the diagnostic code remains.
   a) Check and clean the harness connector contacts.
   b) Connect all the connectors.
   c) Turn the battery disconnect switch to the on position.
   d) Turn the key start switch to the on position.
   e) Operate the machine at low idle.
   f) Check if the diagnostic code remains.

Result

Expected result - the diagnostic code is not active.

Results:

- Yes - SPN 2209 FMI 02 is not active.

  Stop.
- No - SPN 2209 FMI 02 is active.

  Failure of the module is possible but not common. Exit the procedure and do the procedure again. If the diagnostic code remains active, replace the module.

  Stop.

10.18.7.1 Roof lighting module electrical schematic

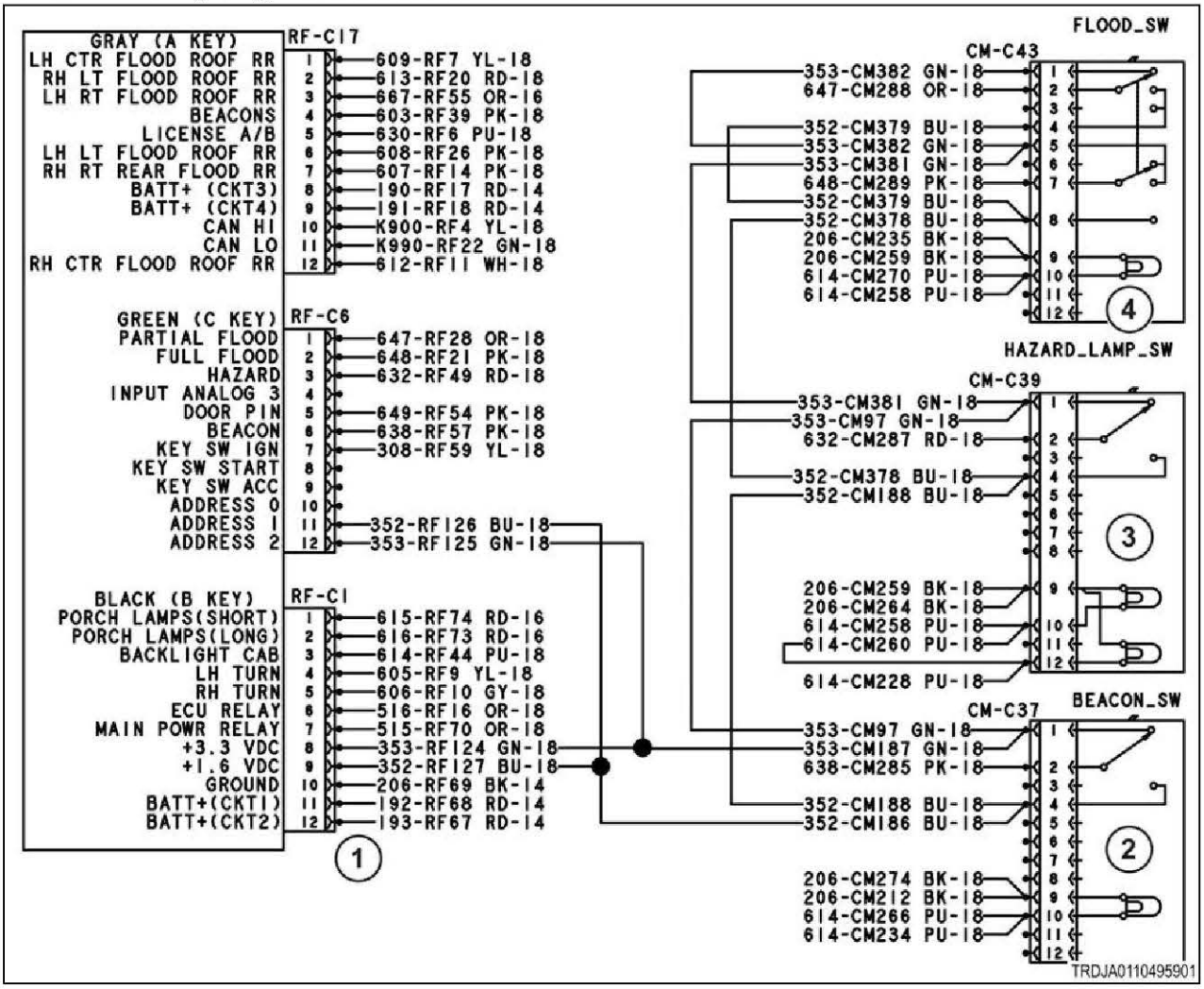

Fig. 706

Schematic legend		
Item	Schematic term	Description
1	Roof controller	Roof controller
2	BEACON_SW	Beacon switch
3	HAZARD_LAMP_SW	Hazard lamp switch
4	FLOOD_SW	Flood switch

10.18.8 Code SA 209 SPN 2386 FMI 05

Roof module has detected current is below normal.

Diagnosis and solution

1. Check beacon lamp.
- a) Turn the key start switch to the off position.
- b) Turn the battery disconnect switch to the off position.
- c) Remove the key from the battery disconnect switch.
- d) Remove the beacon cover.
- e) Check for bad lamps.

Result

Expected result - beacon lamps are good.

Results:

- Yes - beacon lamps are good.

  see step 2, page 10-1243
- No - one or both lamps are bad.

  Replace bad lamps.

  see step 3, page 10-1243

2. Check the harness for an open circuit.
- a) Turn the key start switch to the off position.
- b) Turn the battery disconnect switch to the off position.
- c) Remove the key from the battery disconnect switch.
- d) Disconnect the harness connectors from the lamps.
- e) Put a jumper wire from left-hand beacon light contact 1 to contact 2.
- f) Check resistance from roof lighting module contact J1-4 to contact J3-10.
- g) Put the jumper wire from right-hand beacon light contact 1 to contact 2.
- h) Check resistance from roof lighting module contact J1-4 to contact J3-10.

Result

Expected result - resistance is less than 5 ohms.

Results:

- Yes - resistance is less than 5 ohms.

  see step 3, page 10-1243
- No - resistance is not less than 5 ohms.

  Repair or replace the harness.

  see step 3, page 10-1243

3. Check if the diagnostic code remains.
- a) Check and clean the harness connector contacts.

b) Connect all the connectors.
c) Turn the battery disconnect switch to the on position.
d) Turn the key start switch to the on position.
e) Operate the machine at low idle.
f) Check if the diagnostic code remains.

Result

Expected result - the diagnostic code is not active.

Results:

- Yes - SPN 2386 FMI 05 is not active.

  Stop.
- No - SPN 2386 FMI 05 is active.

  Failure of the module is possible but not common. Exit the procedure and do the procedure again. If the diagnostic code remains active, replace the module.

  Stop.

10.18.8.1 Beacon electrical schematic

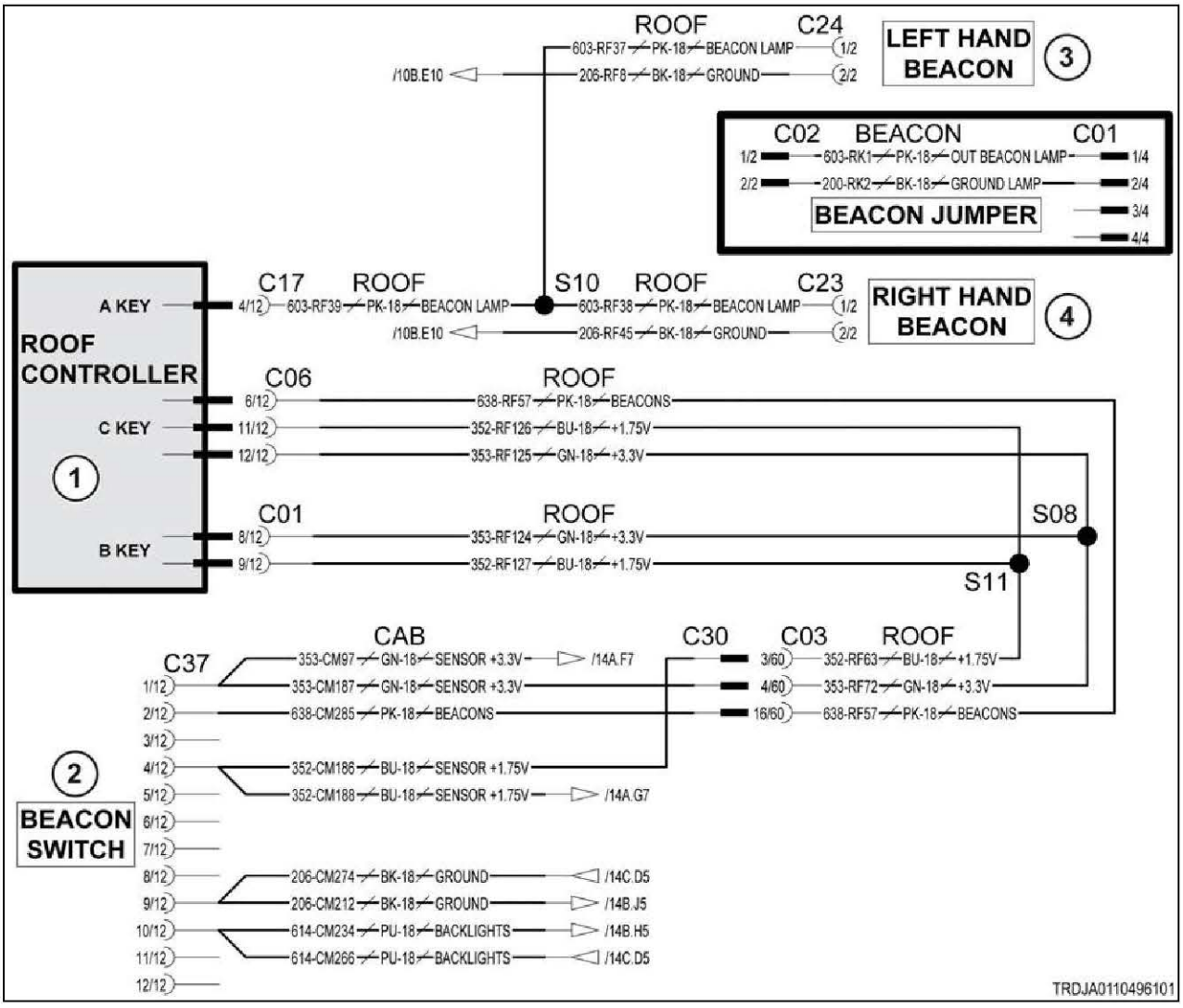

Fig. 707

Schematic legend		
Item	Schematic term	Description
1	ROOF CONTROLLER	Roof controller
2	BEACON SWITCH	Beacon switch
3	LEFT HAND BEACON	Left-hand beacon
4	RIGHT HAND BEACON	Right-hand beacon

10.18.9 Code SA 209 SPN 2386 FMI 06

Roof lighting module has detected current is above normal.

Diagnosis and solution

1. Check the beacon lamp circuit for a short-circuit.

a) Turn the key start switch to the off position.
b) Turn the battery disconnect switch to the off position.
c) Remove the key from the battery disconnect switch.
d) Disconnect all the connectors from the roof lighting module.
e) Check resistance from roof lighting module contact J1-4 to frame ground.

Result

Expected result - resistance is more than 5000 ohms.

Results:

- Yes - resistance is more than 5000 ohms.

  see step 2, page 10-1245
- No - resistance is not more than 5000 ohms.

  Repair or replace the harness.

  see step 2, page 10-1245

2. Check if the diagnostic code remains.

a) Check and clean the harness connector contacts.
b) Connect all the connectors.
c) Turn the battery disconnect switch to the on position.
d) Turn the key start switch to the on position.
e) Operate the machine at low idle.
f) Check if the diagnostic code remains.

Result

Expected result - the diagnostic code is not active.

Results:

- Yes - SPN 2386 FMI 06 is not active.

  Stop.
- No - SPN 2386 FMI 06 is active.

  Failure of the module is possible but not common. Exit the procedure and do the procedure again. If the diagnostic code remains active, replace the module.

  Stop.

10.18.9.1 Beacon electrical schematic

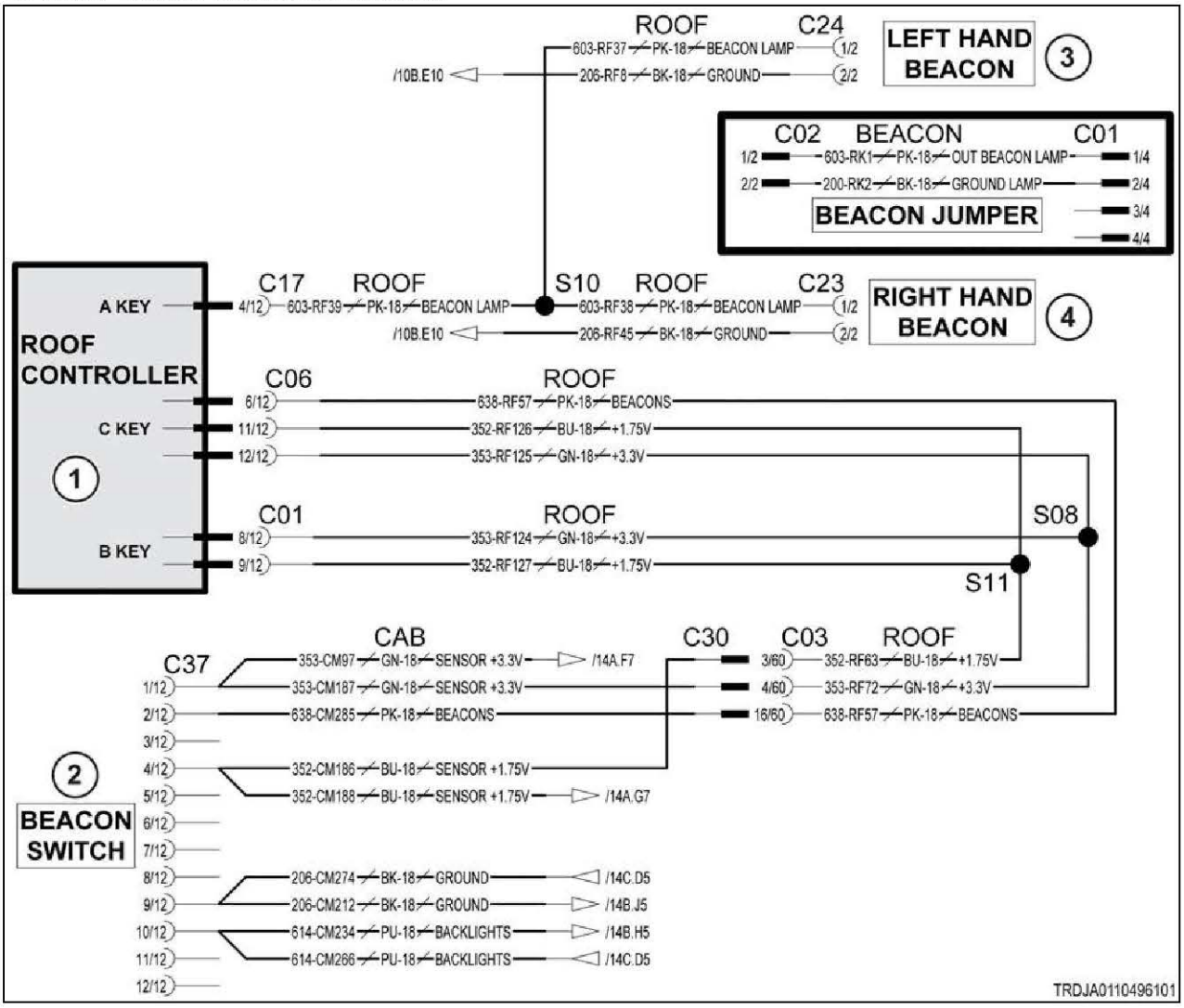

Fig. 708

Schematic legend		
Item	**Schematic term**	**Description**
1	ROOF CONTROLLER	Roof controller
2	BEACON SWITCH	Beacon switch
3	LEFT HAND BEACON	Left-hand beacon
4	RIGHT HAND BEACON	Right-hand beacon

10.18.10 Code SA 209 SPN 2873 FMI 02

Flood lamp switch signal erratic, intermittent, or incorrect.

Diagnosis and solution

1. Check the switch operation.

a) Turn the key start switch to the off position.

b) Turn the battery disconnect switch to the off position.

c) Remove the key from the battery disconnect switch.

d) Disconnect the flood lamp switch from the harness.

e) Check resistance from flood lamp switch contact 1 to contact 2.
f) Check resistance from flood lamp switch contact 5 to contact 7.

Result

Expected result - resistance is less than 5 ohms.

Results:

- Yes - resistance is less than 5 ohms.

  see step 2, page 10-1247
- No - resistance is not less than 5 ohms.

  Replace the switch.

  see step 5, page 10-1248

2. Check the switch operation.
a) Turn the key start switch to the off position.
b) Turn the battery disconnect switch to the off position.
c) Remove the key from the battery disconnect switch.
d) Disconnect the flood lamp switch from the harness.
e) Actuate the flood lamp switch.
f) Check resistance from flood lamp switch contact 2 to contact 4.
g) Check resistance from flood lamp switch contact 5 to contact 7.

Result

Expected result - resistance is less than 5 ohms.

Results:

- Yes - resistance is less than 5 ohms.

  see step 3, page 10-1247
- No - resistance is not less than 5 ohms.

  Replace the switch.

  see step 5, page 10-1248

3. Check for an open circuit in the harness.
a) Turn the key start switch to the off position.
b) Turn the battery disconnect switch to the off position.
c) Remove the key from the battery disconnect switch.
d) Disconnect the flood lamp switch from the harness.
e) Disconnect the roof lighting module connectors from the harness.
f) Put a jumper wire between contact 2 and contact 7 on the flood lamp switch.
g) Check resistance from contact J2-1 to contact J2-2 on the roof lighting module.

Result

Expected result - resistance is less than 5 ohms.

Results:

- Yes - resistance is less than 5 ohms.

  see step 4, page 10-1247
- No - resistance is not less than 5 ohms.

  Replace the switch.

  see step 5, page 10-1248

4. Check for a short-circuit in the harness.

a) Turn the key start switch to the off position.
b) Turn the battery disconnect switch to the off position.
c) Remove the key from the battery disconnect switch.
d) Disconnect the flood lamp switch from the harness.
e) Disconnect the roof lighting module connectors from the harness.
f) Remove the jumper wire.
g) Check resistance from contact J2-1 to all other roof lighting module contacts.

Result

Expected result - resistance is more than 5000 ohms.

Results:

- Yes - resistance is more than 5000 ohms.

  see step 5, page 10-1248
- No - resistance is not more than 5000 ohms.

  Replace the switch.

  see step 5, page 10-1248

5. Check if the diagnostic code remains.

a) Check and clean the harness connector contacts.
b) Connect all the connectors.
c) Turn the battery disconnect switch to the on position.
d) Turn the key start switch to the on position.
e) Operate the machine at low idle.
f) Check if the diagnostic code remains.

Result

Expected result - the diagnostic code is not active.

Results:

- Yes - SPN 2873 FMI 02 is not active.

  Stop.
- No - SPN 2783 FMI 02 is active.

  Failure of the module is possible but not common. Exit the procedure and do the procedure again. If the diagnostic code remains active, replace the module.

  Stop.

10.18.10.1 Front lighting electrical schematic

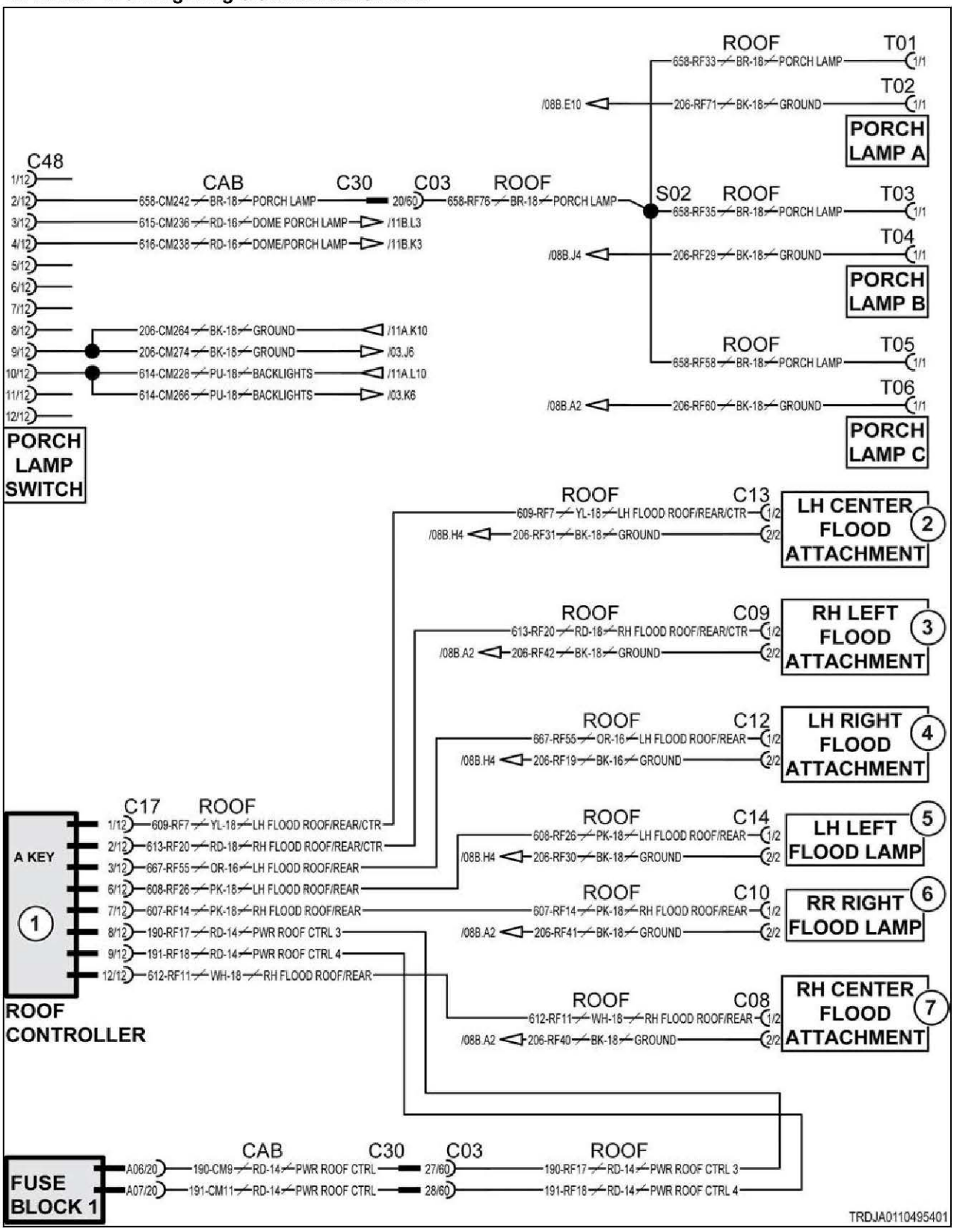

Fig. 709

Schematic legend		
Item	Schematic term	Description
1	ROOF CONTROLLER	Roof lighting module
2	LH CENTER FLOOD ATTACHMENT	Left-hand center flood rear attachment
3	RH LEFT FLOOD ATTACHMENT	Right-hand left flood rear attachment
4	LH RIGHT FLOOD ATTACHMENT	Left-hand right flood rear attachment
5	LH LEFT FLOOD LAMP	Left-hand left flood rear lamp
6	RR RIGHT FLOOD LAMP	Right-hand right flood rear lamp
7	RH CENTER FLOOD ATTACHMENT	Right-hand center flood rear attachment

10.18.11 Code SA 209 SPN 2875 FMI 02

Hazard lamp switch signal erratic, intermittent, or incorrect.

Diagnosis and solution

1. Check the switch operation.

a) Turn the key start switch to the off position.
b) Turn the battery disconnect switch to the off position.
c) Remove the key from the battery disconnect switch.
d) Disconnect the hazard lamp switch from the harness.
e) Check resistance from contact 1 to contact 2 on the hazard lamp switch.

Result

Expected result - resistance is less than 5 ohms.

Results:

- Yes - resistance is less than 5 ohms.

  see step 2, page 10-1250
- No - resistance is not less than 5 ohms.

  Replace the switch.

  see step 5, page 10-1251

2. Check the switch operation.

a) Turn the key start switch to the off position.
b) Turn the battery disconnect switch to the off position.
c) Remove the key from the battery disconnect switch.
d) Disconnect the hazard lamp switch from the harness.
e) Actuate the hazard lamp switch.
f) Check resistance from contact 2 to contact 4 on the hazard lamp switch.

Result

Expected result - resistance is less than 5 ohms.

Results:

- Yes - resistance is less than 5 ohms.

  see step 3, page 10-1251
- No - resistance is not less than 5 ohms.

  Replace the switch.

  see step 5, page 10-1251

3. Check for an open circuit in the harness.
a) Turn the key start switch to the off position.
b) Turn the battery disconnect switch to the off position.
c) Remove the key from the battery disconnect switch.
d) Disconnect the hazard lamp switch from the harness.
e) Disconnect the roof lighting module connectors from the harness.
f) Put a jumper wire between contact 2 and contact 1 on the hazard lamp switch.
g) Check resistance from contact J2-3 to contact J2-12 on the roof lighting module.
h) Put the jumper wire between contact 2 and contact 4 on the hazard lamp switch.
i) Check resistance from contact J2-3 to contact J2-11 on the roof lighting module.

Result

Expected result - resistance is less than 5 ohms.

Results:

- Yes - resistance is less than 5 ohms.

  see step 4, page 10-1251
- No - resistance is not less than 5 ohms.

  Replace the switch.

  see step 5, page 10-1251

4. Check for a short-circuit in the harness.
a) Turn the key start switch to the off position.
b) Turn the battery disconnect switch to the off position.
c) Remove the key from the battery disconnect switch.
d) Disconnect the hazard lamp switch from the harness.
e) Disconnect the roof lighting module connectors from the harness.
f) Remove the jumper wire.
g) Check resistance from contact J2-3 to all other roof lighting module contacts.

Result

Expected result - resistance is more than 5000 ohms.

Results:

- Yes - resistance is more than 5000 ohms.

  see step 5, page 10-1251
- No - resistance is not more than 5000 ohms.

  Replace the switch.

  see step 5, page 10-1251

5. Check if the diagnostic code remains.
a) Check and clean the harness connector contacts.
b) Connect all the connectors.
c) Turn the battery disconnect switch to the on position.
d) Turn the key start switch to the on position.
e) Operate the machine at low idle.
f) Check if the diagnostic code remains.

Result

Expected result - the diagnostic code is not active.

Results:

- Yes - SPN 2875 FMI 02 is not active.

  Stop.
- No - SPN 2785 FMI 02 is active.

  Failure of the module is possible but not common. Exit the procedure and do the procedure again. If the diagnostic code remains active, replace the module.

  Stop.

10.18.11.1 Hazard lamp switch electrical schematic

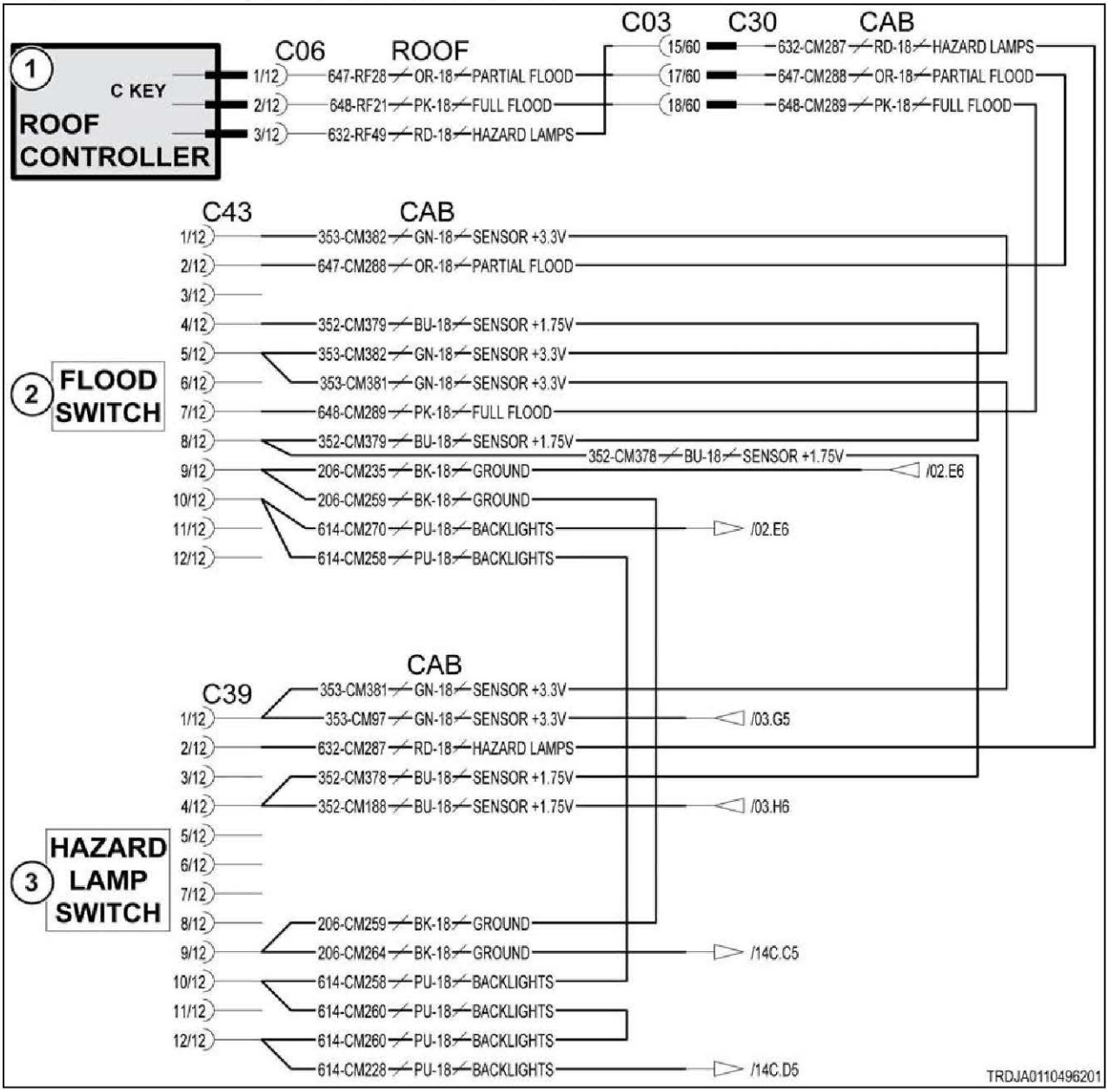

Fig. 710

Schematic legend		
Item	**Schematic term**	**Description**
1	ROOF CONTROLLER	Roof controller
2	FLOOD SWITCH	Flood switch
3	HAZARD LAMP SWITCH	Hazard lamp switch

Schematic legend		
Item	Schematic term	Description
--	SENSOR +3.3V	Sensor +3.3 volts
--	SENSOR +1.75V	Sensor +1.75 volts
--	BACKLIGHTS	Back lamps

10.18.12 Code SA 209 SPN 3507 FMI 06

module has detected current is above normal.

Diagnosis and solution

1. Check for a short circuit in the harness.
   a) Turn the key start switch to the off position.
   b) Turn the battery disconnect switch to the off position.
   c) Remove the key from the battery disconnect switch.
   d) Disconnect the main power relay, fuse block 2, and the roof lighting module.
   e) Check resistance from roof lighting module contact J3-7 to all other roof lighting module contacts.

   Result

   Expected result - resistance is more than 5000 ohms.

   Results:

   - Yes - resistance is more than 5000 ohms.

     see step 2, page 10-1253
   - No - resistance is not more than 5000 ohms.

     Repair or replace the harness.

     see step 3, page 10-1253

2. Check the relay for a short-circuit.
   a) Turn the key start switch to the off position.
   b) Turn the battery disconnect switch to the off position.
   c) Remove the key from the battery disconnect switch.
   d) Disconnect the main power relay, fuse block 2, and the roof lighting module.
   e) Check resistance from contact 1 to contact 2 on the main power relay.

   Result

   Expected result - resistance is more than 5000 ohms.

   Results:

   - Yes - resistance is more than 5000 ohms.

     see step 3, page 10-1253
   - No - resistance is not more than 5000 ohms.

     Replace the relay.

     see step 3, page 10-1253

3. Check if the diagnostic code remains.
   a) Check and clean the harness connector contacts.
   b) Connect all the connectors.
   c) Turn the battery disconnect switch to the on position.
   d) Turn the key start switch to the on position.
   e) Operate the machine at low idle.

f) Check if the diagnostic code remains.

Result

Expected result - the diagnostic code is not active.

Results:

- Yes - SPN 3507 FMI 06 is not active.

  Stop.
- No - SPN 3507 FMI 06 is active.

  Failure of the module is possible but not common. Exit the procedure and do the procedure again. If the diagnostic code remains active, replace the module.

  Stop.

10.18.12.1 Main power relay electrical schematic

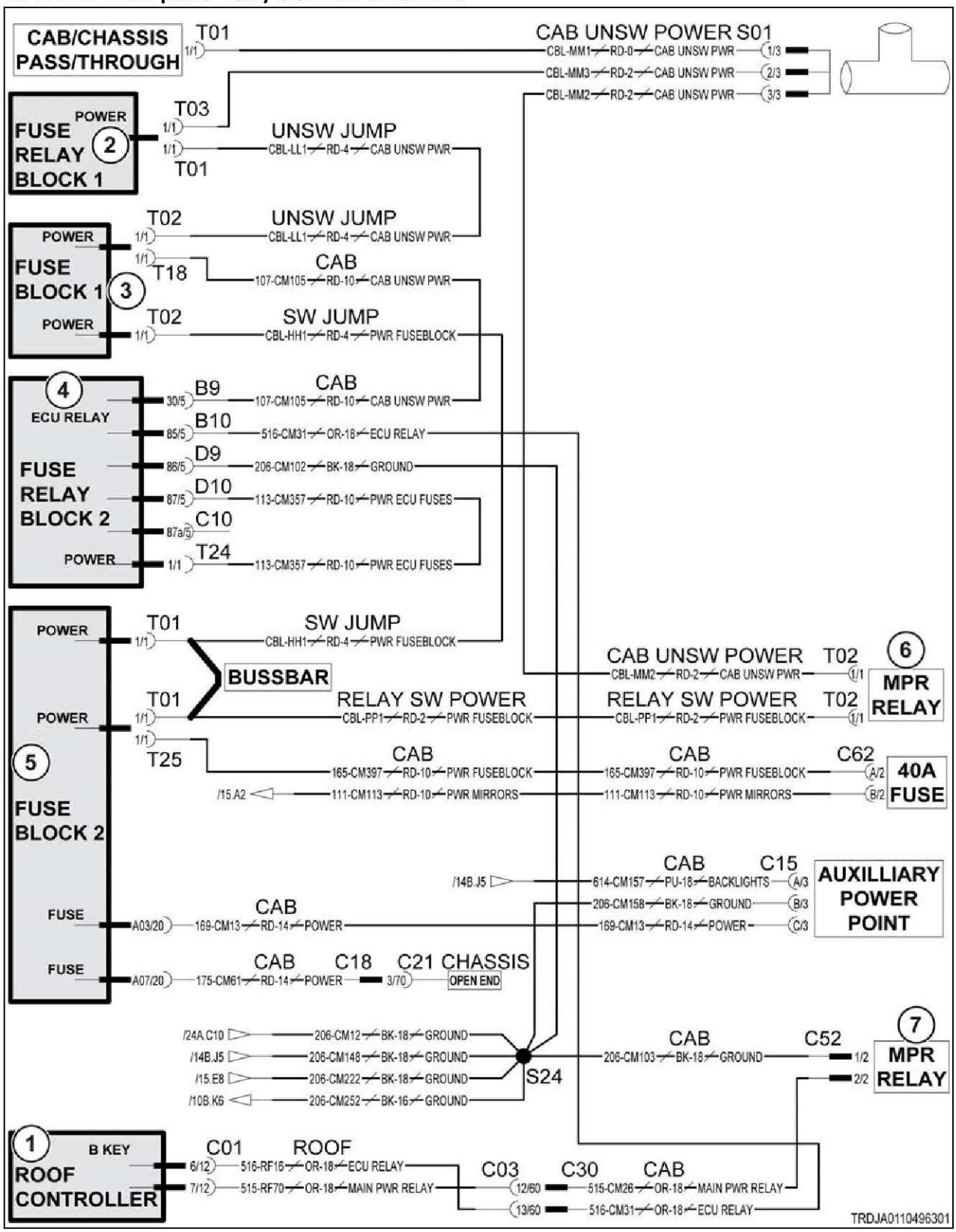

Fig. 711

Schematic legend		
Item	Schematic term	Description
1	ROOF CONTROLLER	Roof controller
2	FUSE RELAY BLOCK 1	Fuse relay block 1
3	FUSE BLOCK 1	Fuse block 1
4	FUSE RELAY BLOCK 2	Fuse relay block 2
5	FUSE BLOCK 2	Fuse block 2
6	MPR RELAY	Main power relay
7	MPR RELAY	Main power relay
--	CAB UNSW PWR	Cab unswitched power
--	PWR FUSEBLOCK	Fuse block power

10.18.13 Code SA 209 SPN 3508 FMI 05

module has detected current is below normal.

Diagnosis and solution

1. Check for an open circuit in the harness.

a) Turn the key start switch to the off position.
b) Turn the battery disconnect switch to the off position.
c) Remove the key from the battery disconnect switch.
d) Disconnect the main power relay, fuse block 2, and the roof lighting module.
e) Put a jumper wire from contact 1 to contact 2 on the main power relay.
f) Check resistance from J3-7 to frame ground on the roof lighting module.

Result

Expected result - resistance is less than 5 ohms.

Results:

- Yes - resistance is less than 5 ohms.

  see step 2, page 10-1256
- No - resistance is not less than 5 ohms.

  Repair or replace the harness.

  see step 3, page 10-1257

2. Check the main power relay for an open circuit.

a) Connect the harness to the main power relay.
b) Turn the battery disconnect switch to the on position.
c) Turn the key start switch to the on position but do not start the engine.
d) Check resistance from contact T2 to contact T2 on the main power relay.

Result

Expected result - resistance is less than 5 ohms.

Results:

- Yes - resistance is less than 5 ohms.

  see step 3, page 10-1257

- No - resistance is not less than 5 ohms.

  Replace the relay.

  see step 3, page 10-1257

3. Check if the diagnostic code remains.

a) Check and clean the harness connector contacts.
b) Connect all the connectors.
c) Turn the battery disconnect switch to the on position.
d) Turn the key start switch to the on position.
e) Operate the machine at low idle.
f) Check if the diagnostic code remains.

Result

Expected result - the diagnostic code is not active.

Results:

- Yes - SPN 3508 FMI 05 is not active.

  Stop.
- No - SPN 3508 FMI 05 is active.

  Failure of the module is possible but not common. Exit the procedure and do the procedure again. If the diagnostic code remains active, replace the module.

  Stop.

10.18.13.1 Main power relay electrical schematic

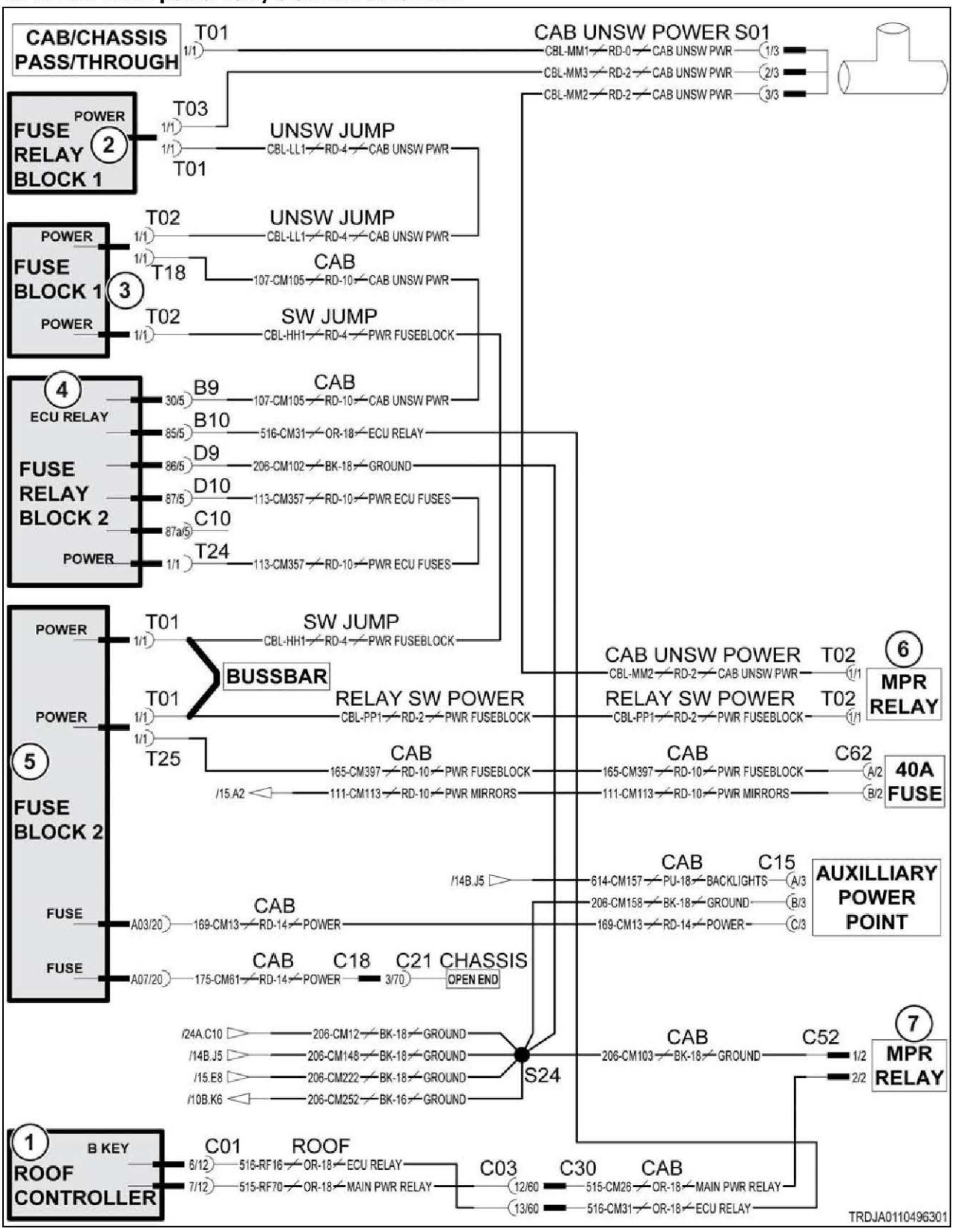

Fig. 712

Schematic legend		
Item	Schematic term	Description
1	ROOF CONTROLLER	Roof controller
2	FUSE RELAY BLOCK 1	Fuse relay block 1
3	FUSE BLOCK 1	Fuse block 1
4	FUSE RELAY BLOCK 2	Fuse relay block 2
5	FUSE BLOCK 2	Fuse block 2
6	MPR RELAY	Main power relay
7	MPR RELAY	Main power relay
--	CAB UNSW PWR	Cab unswitched power
--	PWR FUSEBLOCK	Fuse block power

10.18.14 Code SA 209 SPN 3508 FMI 06

Module has detected current is above normal.

Diagnosis and solution

1. Check for a short circuit in the harness.

a) Turn the key start switch to the off position.
b) Turn the battery disconnect switch to the off position.
c) Remove the key from the battery disconnect switch.
d) Disconnect the main power relay, fuse block 2, and the roof lighting module.
e) Check resistance from roof module contact J3-7 to all other roof lighting module contacts.

Result

Expected result - resistance is more than 5000 ohms.

Results:

- Yes - resistance is more than 5000 ohms.

  see step 2, page 10-1259
- No - resistance is not more than 5000 ohms.

  Repair or replace the harness.

  see step 3, page 10-1260

2. Check for a short circuit in the relay.

a) Turn the key start switch to the off position.
b) Turn the battery disconnect switch to the off position.
c) Remove the key from the battery disconnect switch.
d) Disconnect the main power relay, fuse block 2, and the roof lighting module.
e) Check resistance from contact 1 and contact 2 on the main power relay.

Result

Expected result - resistance is more than 5000 ohms.

Results:

- Yes - resistance is more than 5000 ohms.

  see step 3, page 10-1260

- No - resistance is not more than 5000 ohms.

  Replace the relay.

  see step 3, page 10-1260

3. Check if the diagnostic code remains.

a) Check and clean the harness connector contacts.
b) Connect all the connectors.
c) Turn the battery disconnect switch to the on position.
d) Turn the key start switch to the on position.
e) Operate the machine at low idle.
f) Check if the diagnostic code remains.

Result

Expected result - the diagnostic code is not active.

Results:

- Yes - SPN 3508 FMI 06 is not active.

  Stop.
- No - SPN 3508 FMI 06 is active.

  Failure of the module is possible but not common. Exit the procedure and do the procedure again. If the diagnostic code remains active, replace the module.

  Stop.

10.18.14.1 Main power relay electrical schematic

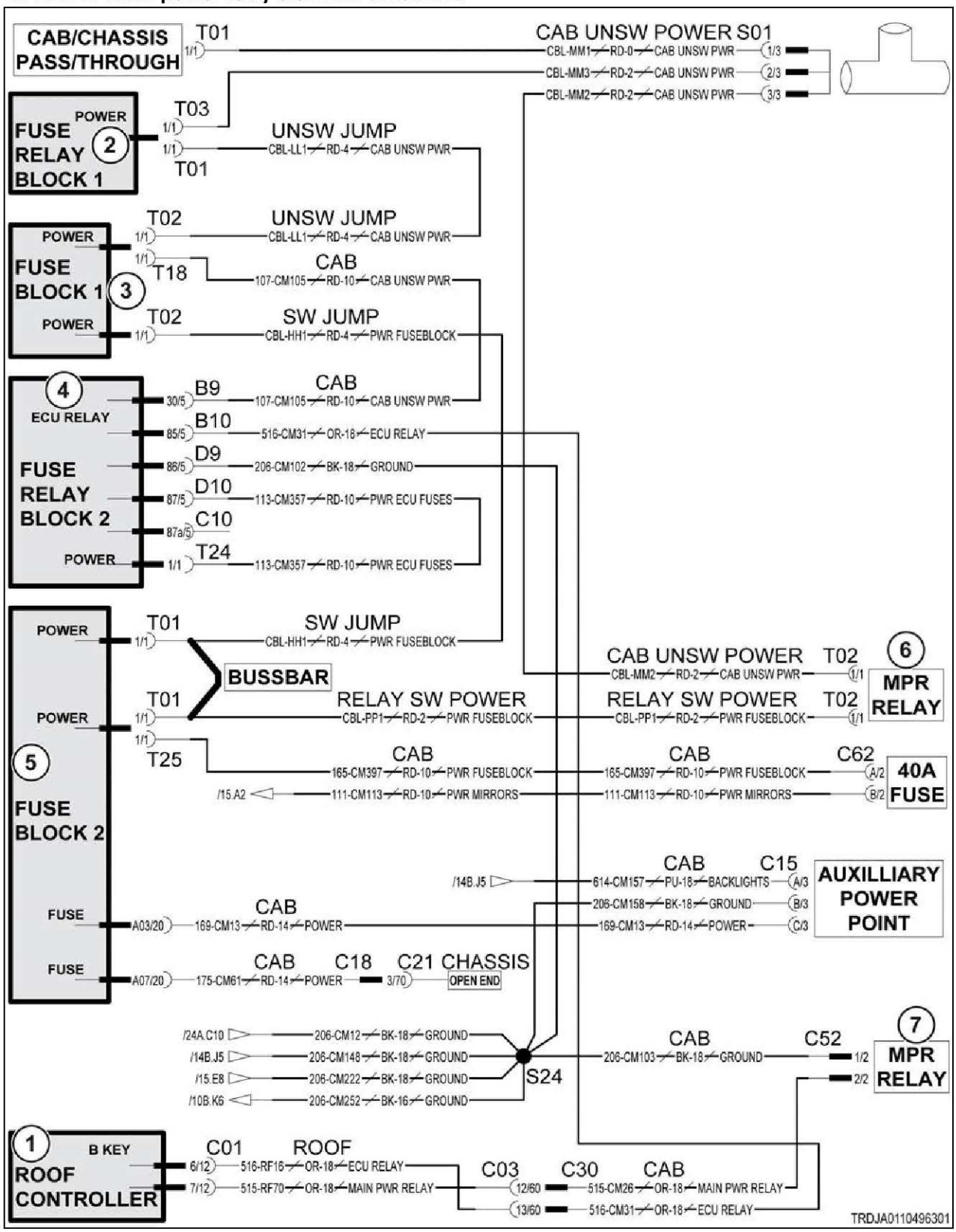

Fig. 713

Schematic legend		
Item	Schematic term	Description
1	ROOF CONTROLLER	Roof controller
2	FUSE RELAY BLOCK 1	Fuse relay block 1
3	FUSE BLOCK 1	Fuse block 1
4	FUSE RELAY BLOCK 2	Fuse relay block 2
5	FUSE BLOCK 2	Fuse block 2
6	MPR RELAY	Main power relay
7	MPR RELAY	Main power relay
--	CAB UNSW PWR	Cab unswitched power
--	PWR FUSEBLOCK	Fuse block power

10.18.15 Code SA 209 SPN 3976 FMI 06

Module has detected that current is above normal.

Diagnosis and solution

1. Check for a short-circuit in the harness.

a) Turn the key start switch to the off position.
b) Turn the battery disconnect switch to the off position.
c) Remove the key from the battery disconnect switch.
d) Check resistance from roof module contact J3-1 to all other roof module contacts.

Result

Expected result - resistance is more than 5000 ohms.

Results:

- Yes - resistance is more than 5000 ohms.

  see step 2, page 10-1262
- No - resistance is not more than 5000 ohms.

  Repair replace the harness.

  see step 2, page 10-1262

2. Check if the diagnostic code remains.

a) Check and clean the harness connector contacts.
b) Connect all the connectors.
c) Turn the battery disconnect switch to the on position.
d) Turn the key start switch to the on position.
e) Operate the machine at low idle.
f) Check if the diagnostic code remains.

Result

Expected result - the diagnostic code is not active.

Results:

- Yes - SPN 3976 FMI 06 is not active.

  Stop.

- No - SPN 3976 FMI 06 is active.

  Failure of the module is possible but not common. Exit the procedure and do the procedure again. If the diagnostic code remains active, replace the module.

  Stop.

10.18.15.1 Dome lamp electrical schematic

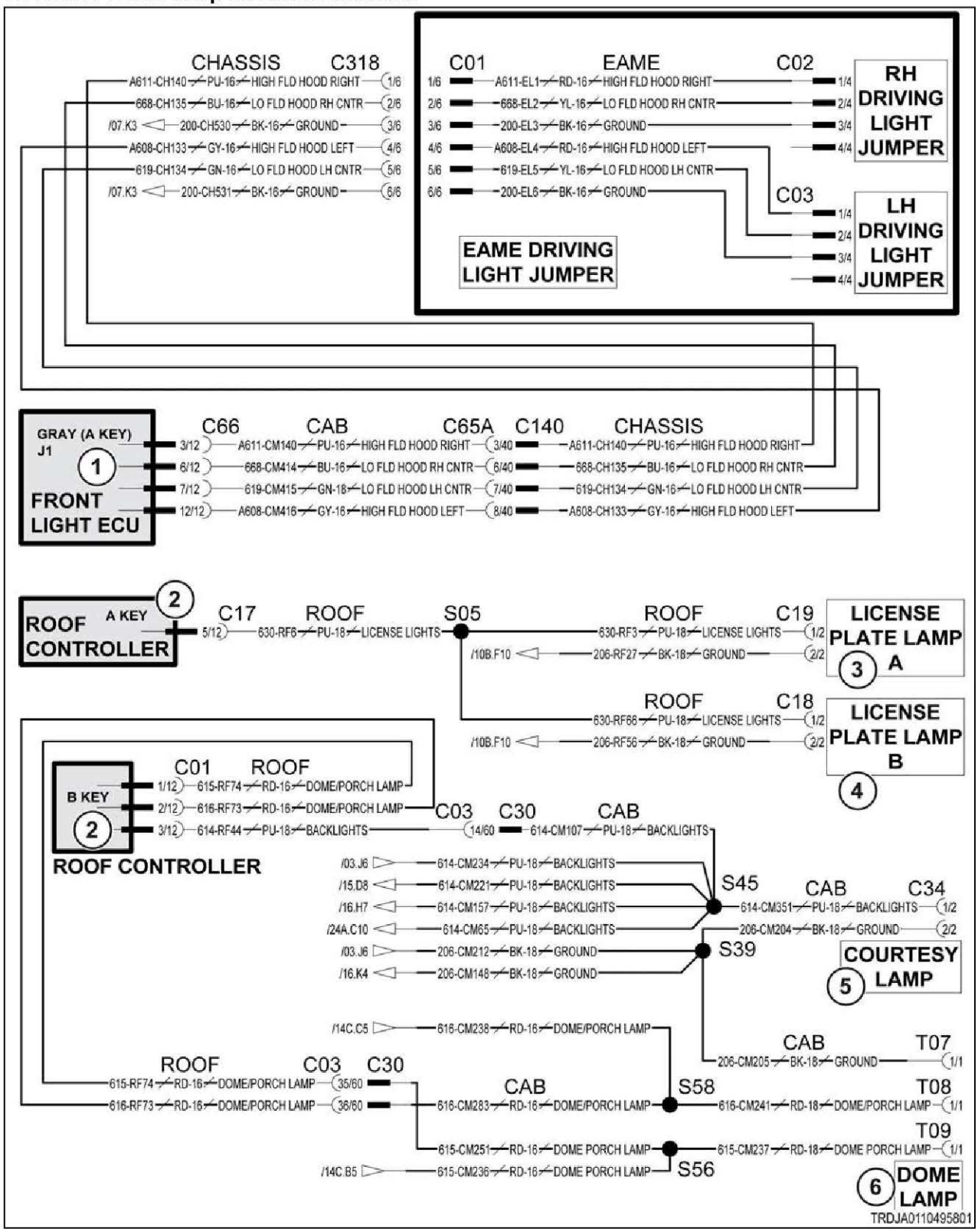

Fig. 714

Schematic legend		
Item	Schematic term	Description
1	FRONT LIGHT ECU	Front lighting module
2	ROOF CONTROLLER	Roof controller
3	LICENSE PLATE LAMP A	License plate lamp A
4	LICENSE PLATE LAMP B	License plate lamp B
5	COURTESY LAMP	Courtesy lamp
6	DOME LAMP	Dome lamp
--	HIGH FLD ENGINE COVER RIGHT	Right-hand high flood engine cover
--	LO FLD ENGINE COVER RH CNTR	Right-hand low flood center engine cover
--	LO FLD ENGINE COVER LH CNTR	Left-hand low flood center engine cover
--	HIGH FLD ENGINE COVER LEFT	Left-hand high flood engine cover

10.18.16 Code SA 209 SPN 882 FMI 05

Roof lighting module has detected license plate lamp current is below normal.

Diagnosis and solution

1. Check the license plate lamp.

a) Turn the battery disconnect switch to the on position.
b) Turn the key start switch to the on position.
c) Check lamps for illumination.

Result

Expected result - license plate lamps are good.

Results:

- Yes - license plate lamps are good.

  see step 2, page 10-1264
- No - license plate lamps are not good.

  Replace the bad lamps.

  see step 3, page 10-1265

2. Check for an open circuit in the harness.

a) Turn the key start switch to the off position.
b) Turn the battery disconnect switch to the off position.
c) Remove the key from the battery disconnect switch.
d) Disconnect the harness connectors from the license plate lamps.
e) Put a jumper wire from contact 1 to contact 2 on license plate lamp A.
f) Check resistance from J1-5 to J3-10 on the roof lighting module.
g) Put the jumper wire from contact 1 to contact 2 on license plate lamp B.
h) Check resistance from J1-5 to J3-10 on the roof lighting module.

Result

Expected result - resistance is less than 5 ohms.

Results:

- Yes - resistance is less than 5 ohms.

  see step 3, page 10-1265

- No - resistance is not less than 5 ohms.

  Repair or replace the harness.

  see step 3, page 10-1265

3. Check if the diagnostic code remains.

a) Check and clean the harness connector contacts.
b) Connect all the connectors.
c) Turn the battery disconnect switch to the on position.
d) Turn the key start switch to the on position.
e) Operate the machine at low idle.
f) Check if the diagnostic code remains.

Result

Expected result - the diagnostic code is not active.

Results:

- Yes - SPN 882 FMI 05 is not active.

  Stop.
- No - SPN 882 FMI 05 is active.

  Failure of the module is possible but not common. Exit the procedure and do the procedure again. If the diagnostic code remains active, replace the module.

  Stop.

10.18.16.1 License plate lamp electrical schematic

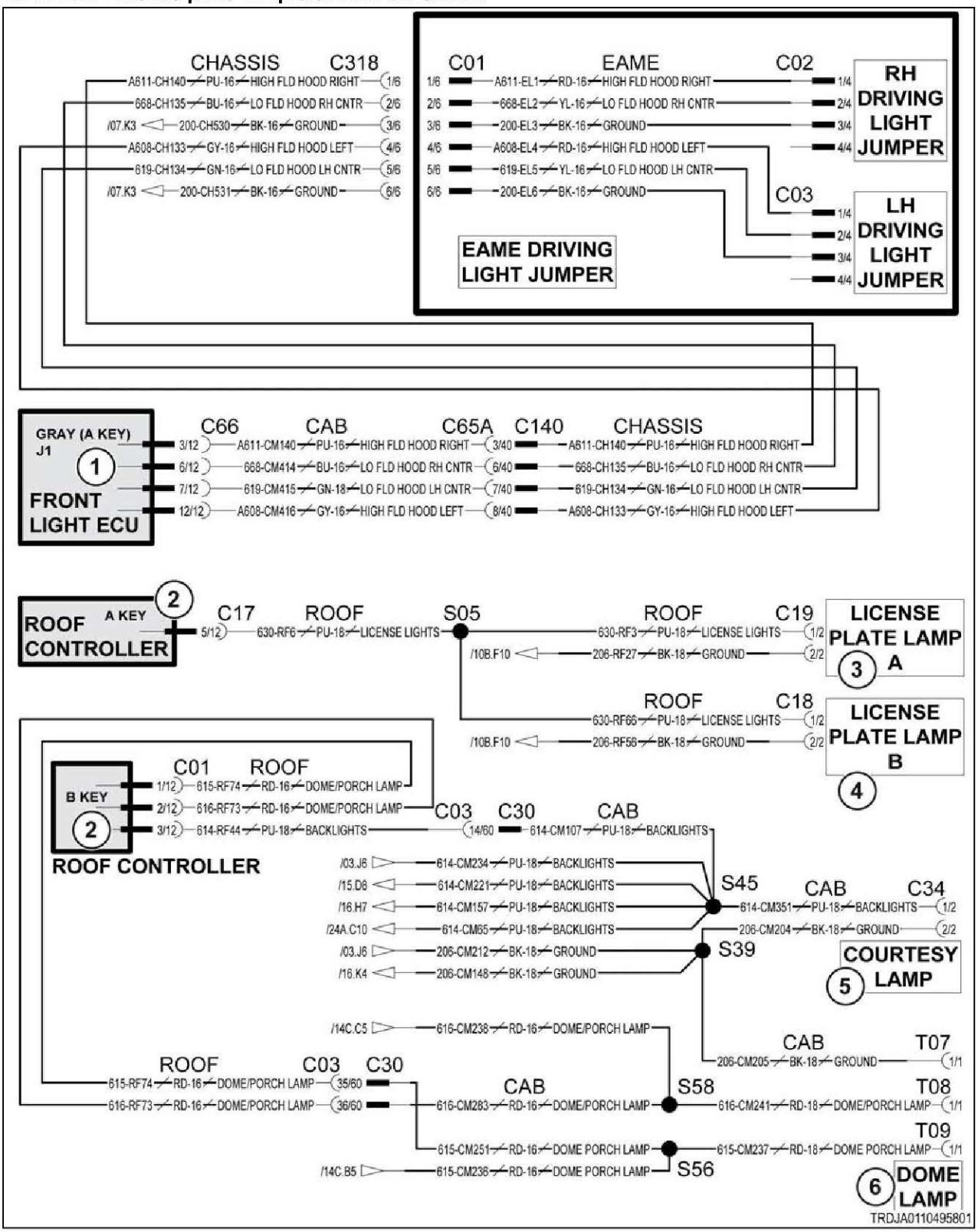

Fig. 715

Schematic legend		
Item	Schematic term	Description
1	FRONT LIGHT ECU	Front lighting module
2	ROOF CONTROLLER	Roof controller
3	LICENSE PLATE LAMP A	License plate lamp A
4	LICENSE PLATE LAMP B	License plate lamp B
5	COURTESY LAMP	Courtesy lamp
6	DOME LAMP	Dome lamp
--	HIGH FLD ENGINE COVER RIGHT	Right-hand high flood engine cover
--	LO FLD ENGINE COVER RH CNTR	Right-hand low flood center engine cover
--	LO FLD ENGINE COVER LH CNTR	Left-hand low flood center engine cover
--	HIGH FLD ENGINE COVER LEFT	Left-hand high flood engine cover

10.18.17 Code SA 209 SPN 882 FMI 06

Roof lighting module has detected license plate lamp current is above normal.

Diagnosis and solution

1. Check for a short-circuit in the license plate lamp circuit.

a) Turn the key start switch to the off position.
b) Turn the battery disconnect switch to the off position.
c) Remove the key from the battery disconnect switch.
d) Disconnect all the connectors from the roof lighting module.
e) Check resistance from the roof lighting module contact J1-5 to frame ground.

Result

Expected result - resistance is more than 5000 ohms.

Results:

- Yes - resistance is more than 5000 ohms.

  see step 2, page 10-1267
- No - resistance is not more than 5000 ohms.

  Repair or replace the harness.

  see step 2, page 10-1267

2. Check if the diagnostic code remains.

a) Check and clean the harness connector contacts.
b) Connect all the connectors.
c) Turn the battery disconnect switch to the on position.
d) Turn the key start switch to the on position.
e) Operate the machine at low idle.
f) Check if the diagnostic code remains.

Result

Expected result - the diagnostic code is not active.

Results:

- Yes - SPN 882 FMI 06 is not active.

  Stop.

- No - SPN 882 FMI 06 is active.

  Failure of the module is possible but not common. Exit the procedure and do the procedure again. If the diagnostic code remains active, replace the module.

  Stop.

10.18.17.1 License plate lamp electrical schematic

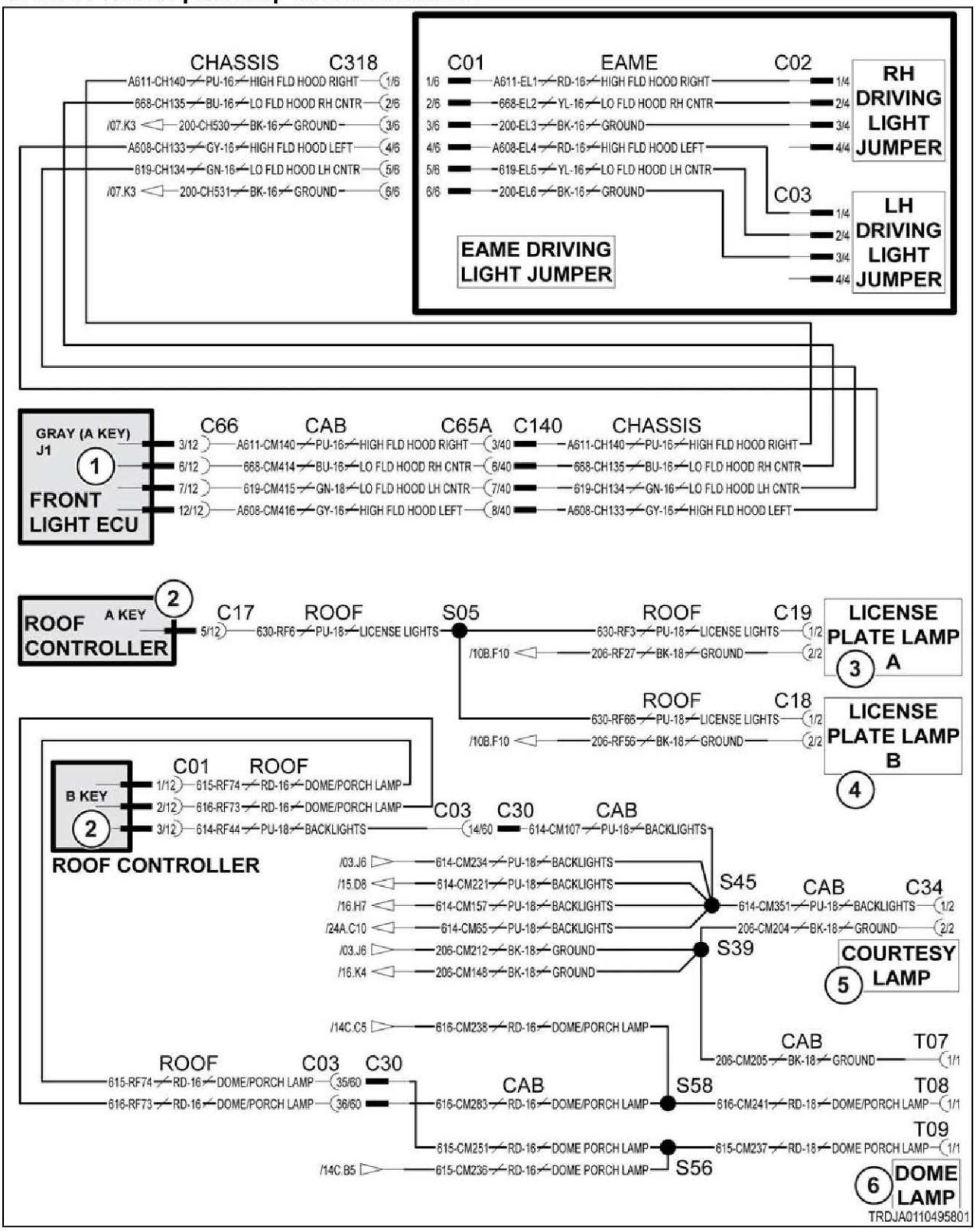

Fig. 716

Schematic legend		
Item	**Schematic term**	**Description**
1	FRONT LIGHT ECU	Front lighting module
2	ROOF CONTROLLER	Roof controller
3	LICENSE PLATE LAMP A	License plate lamp A
4	LICENSE PLATE LAMP B	License plate lamp B
5	COURTESY LAMP	Courtesy lamp
6	DOME LAMP	Dome lamp
--	HIGH FLD ENGINE COVER RIGHT	Right-hand high flood engine cover
--	LO FLD ENGINE COVER RH CNTR	Right-hand low flood center engine cover
--	LO FLD ENGINE COVER LH CNTR	Left-hand low flood center engine cover
--	HIGH FLD ENGINE COVER LEFT	Left-hand high flood engine cover

10.19 210 Rear lighting module

10.19.1 Code SA 210 SPN 46 FMI 00

Rear lighting module has determined sensor circuit voltage is above normal.

Diagnosis an solution

1. Check the sensor.

a) Check the sensor, wiring, and hardware.

Result

Expected result - there is no damage to the sensor, wiring, or hardware.

Results:

- Yes - there is no damage to the sensor, wiring, or hardware.

  see step 2, page 10-1270
- No - there is damage to the sensor, wiring, or hardware.

  Repair or replace the harness.

  see step 5, page 10-1271

2. Check for power at the sensor.

a) Turn the battery disconnect switch to the on position.

b) Turn the key start switch to the on position.

c) Check voltage from contact 2 to frame ground at the sensor.

Result

Expected result - voltage is 12 volts.

Results:

- Yes - voltage is 12 volts.

  see step 3, page 10-1270
- No - voltage is not 12 volts.

  Check the fuse block.

  If the fuse is good, repair or replace the harness.

  If the fuse is bad, replace the fuse.

  see step 5, page 10-1271

3. Check for correct ground at the sensor.

a) Turn the key start switch to the off position.

b) Turn the battery disconnect switch to the off position.

c) Remove the key from the battery disconnect switch.

d) Check resistance from contact 1 to frame ground at the sensor.

Result

Expected result - resistance is less than 5 ohms.

Results:

- Yes - resistance is less than 5 ohms.

  see step 4, page 10-1271

- No - resistance is not less than 5 ohms.

  Repair or replace the harness.

  see step 5, page 10-1271

4. Check for a short-circuit in the sensor harness.

a) Turn the key start switch to the off position.
b) Turn the battery disconnect switch to the off position.
c) Remove the key from the battery disconnect switch.
d) Disconnect the harness from the sensor, rear lighting module, right-hand belt tension sensor, and left-hand belt tension sensor connectors.
e) Check resistance between rear lighting module contact J2-3 to all other rear lighting module contacts.

Result

Expected result - resistance is more than 5000 ohms.

Results:

- Yes - resistance is more than 5000 ohms.

  see step 5, page 10-1271
- No - resistance is not more than 5000 ohms.

  Repair or replace the harness.

  see step 5, page 10-1271

5. Check if the diagnostic code remains.

a) Check and clean the harness connector contacts.
b) Connect all the connectors.
c) Turn the battery disconnect switch to the on position.
d) Turn the key start switch to the on position.
e) Operate the machine at low idle.
f) Check if the diagnostic code remains.

Result

Expected result - the diagnostic code is not active.

Results:

- Yes - SPN 46 FMI 00 is not active.

  Stop.
- No - SPN 46 FMI 00 is active.

  Failure of the module is possible but not common. Exit the procedure and do the procedure again. If the diagnostic code remains active, replace the module.

  Stop.

10.19.1.1 Air system pressure sensor electrical schematic

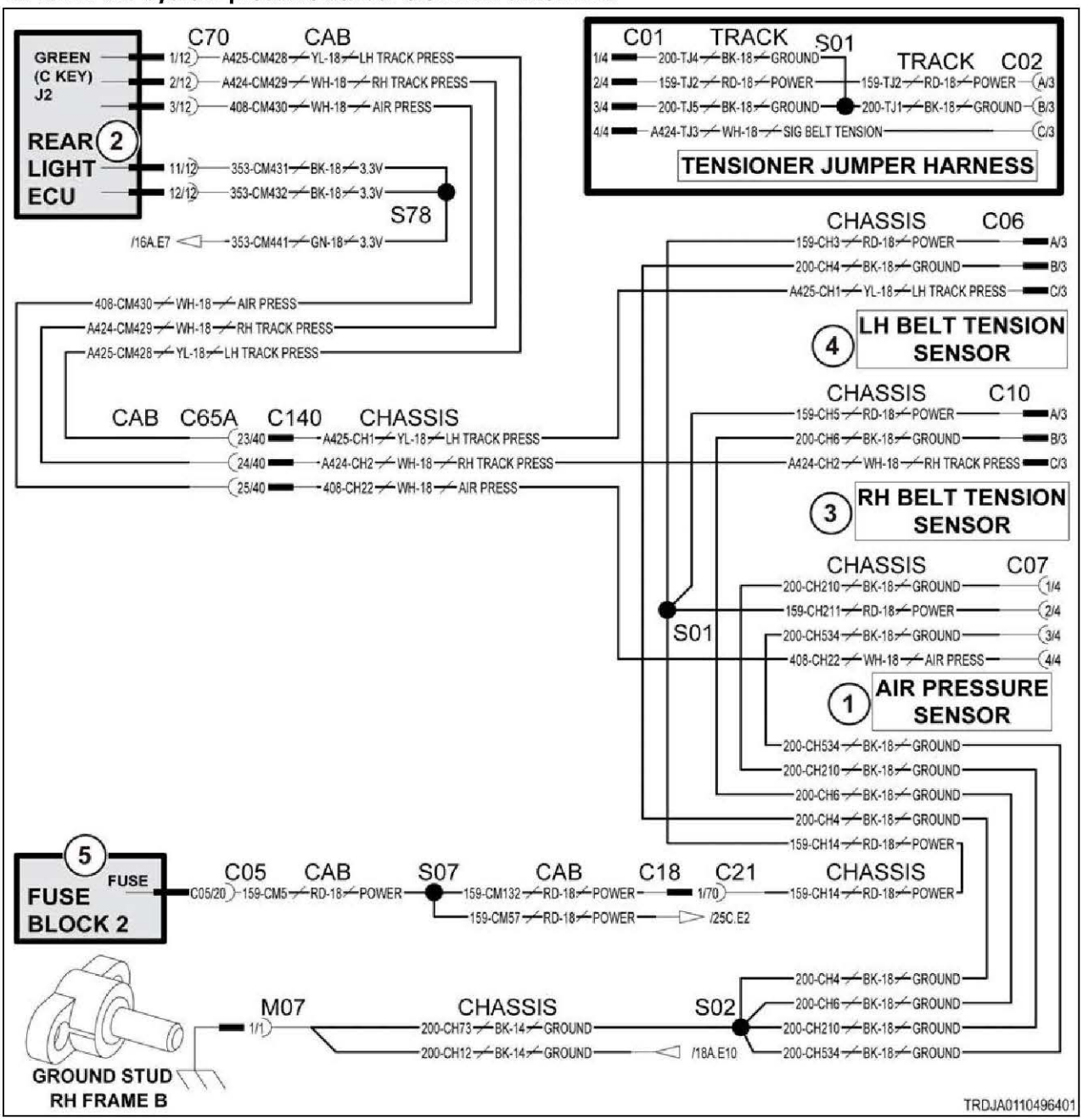

Fig. 717

Schematic legend		
Item	**Schematic term**	**Description**
1	AIR PRESSURE SENSOR	Air pressure sensor
2	REAR LIGHT ECU	Rear lighting module
3	RH BELT TENSION SENSOR	Right-hand belt tension sensor
4	LH BELT TENSION SENSOR	Left-hand belt tension sensor
5	FUSE BLOCK 2	Fuse block 2
--	LH TRACK PRESS	Left-hand track pressure
--	RH TRACK PRESS	Right-hand track pressure

Schematic legend		
Item	Schematic term	Description
--	AIR PRESS	Air pressure
--	SIG BELT TENSION	Signal belt tension
--	HIGH FLD ENGINE COVER LEFT	Left-hand high flood engine cover

10.19.2 Code SA 210 SPN 46 FMI 01

Rear lighting module has determined sensor circuit voltage is below normal.

Diagnosis and solution

1. Check the sensor.
   a) Check the sensor, wiring, and hardware.

      Result

      Expected result - there is no damage to the sensor, wiring, or hardware.

      Results:

      - Yes - there is no damage to the sensor, wiring, or hardware.

        see step 2, page 10-1273
      - No - there is damage to the sensor, wiring, or hardware.

        Repair or replace the harness.

        see step 5, page 10-1274

2. Check for power at the sensor.
   a) Turn the battery disconnect switch to the on position.
   b) Turn the key start switch to the on position.
   c) Check voltage from contact 2 to frame ground at the sensor.

      Result

      Expected result - voltage is 12 volts.

      Results:

      - Yes - voltage is 12 volts.

        see step 3, page 10-1273
      - No - voltage is not 12 volts.

        Check the fuse block.

        If the fuse is good, repair or replace the harness.

        If the fuse is bad, replace the fuse.

        see step 5, page 10-1274

3. Check for correct ground at the sensor.
   a) Turn the key start switch to the off position.
   b) Turn the battery disconnect switch to the off position.
   c) Remove the key from the battery disconnect switch.
   d) Check resistance from contact 1 to frame ground at the sensor.

      Result

      Expected result - resistance is less than 5 ohms.

      Results:

- Yes - resistance is less than 5 ohms.

  see step 4, page 10-1274
- No - resistance is not less than 5 ohms.

  Repair or replace the harness.

  see step 5, page 10-1274

4. Check for a short-circuit in the sensor harness.

a) Turn the key start switch to the off position.
b) Turn the battery disconnect switch to the off position.
c) Remove the key from the battery disconnect switch.
d) Disconnect the harness from the sensor, rear lighting module, right-hand belt tension sensor, and left-hand belt tension sensor connectors.
e) Check resistance between rear lighting module contact J2-3 to all other rear lighting module contacts.

Result

Expected result - resistance is more than 5000 ohms.

Results:

- Yes - resistance is more than 5000 ohms.

  see step 5, page 10-1274
- No - resistance is not more than 5000 ohms.

  Repair or replace the harness.

  see step 5, page 10-1274

5. Check if the diagnostic code remains.

a) Check and clean the harness connector contacts.
b) Connect all the connectors.
c) Turn the battery disconnect switch to the on position.
d) Turn the key start switch to the on position.
e) Operate the machine at low idle.
f) Check if the diagnostic code remains.

Result

Expected result - the diagnostic code is not active.

Results:

- Yes - SPN 46 FMI 01 is not active.

  Stop.
- No - SPN 46 FMI 01 is active.

  Failure of the module is possible but not common. Exit the procedure and do the procedure again. If the diagnostic code remains active, replace the module.

  Stop.

10.19.2.1 Air system pressure sensor electrical schematic

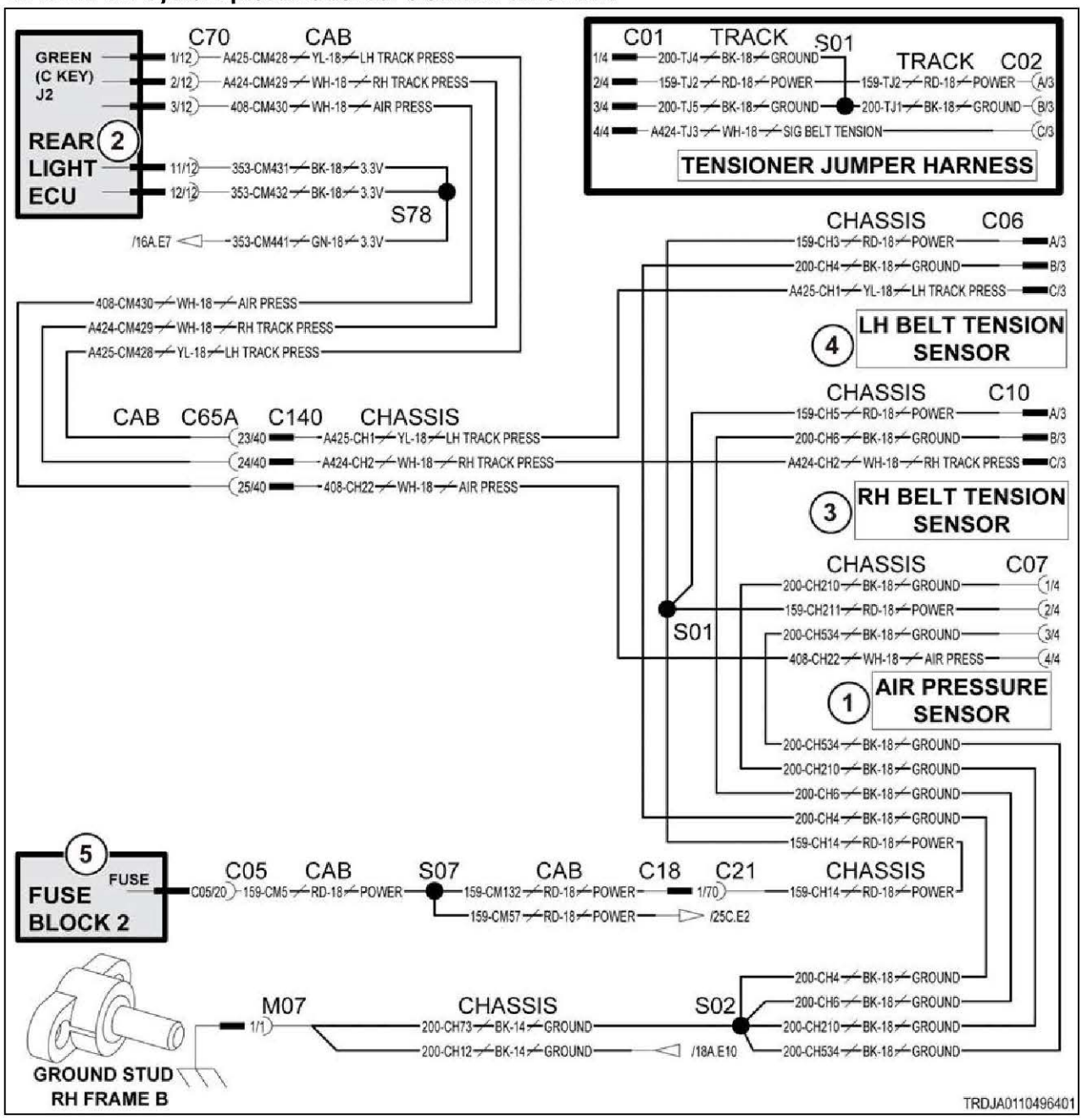

Fig. 718

Schematic legend		
Item	**Schematic term**	**Description**
1	AIR PRESSURE SENSOR	Air pressure sensor
2	REAR LIGHT ECU	Rear lighting module
3	RH BELT TENSION SENSOR	Right-hand belt tension sensor
4	LH BELT TENSION SENSOR	Left-hand belt tension sensor
5	FUSE BLOCK 2	Fuse block 2
--	LH TRACK PRESS	Left-hand track pressure
--	RH TRACK PRESS	Right-hand track pressure

Schematic legend		
Item	Schematic term	Description
--	AIR PRESS	Air pressure
--	SIG BELT TENSION	Signal belt tension
--	HIGH FLD ENGINE COVER LEFT	Left-hand high flood engine cover

10.19.3 Code SA 210 SPN 46 FMI 03

module has determined sensor circuit voltage is above normal.

Diagnosis and solution

1. Check the sensor.

a) Check the sensor, wiring, and hardware.

Result

Expected result - there is no damage to the sensor, wiring, or hardware.

Results:

- Yes - there is no damage to the sensor, wiring, or hardware.

  see step 2, page 10-1276
- No - there is damage to the sensor, wiring, or hardware.

  Repair or replace the harness.

  see step 5, page 10-1277

2. Check for power at the sensor.

a) Turn the battery disconnect switch to the on position.

b) Turn the key start switch to the on position.

c) Check voltage from contact 2 to frame ground at the sensor.

Result

Expected result - voltage is 12 volts.

Results:

- Yes - voltage is 12 volts.

  see step 3, page 10-1276
- No - voltage is not 12 volts.

  Check the fuse block.

  If the fuse is good, repair or replace the harness.

  If the fuse is bad, replace the fuse.

  see step 5, page 10-1277

3. Check for correct ground at the sensor.

a) Turn the key start switch to the off position.

b) Turn the battery disconnect switch to the off position.

c) Remove the key from the battery disconnect switch.

d) Check resistance from contact 1 to frame ground at the sensor.

Result

Expected result - resistance is less than 5 ohms.

Results:

- Yes - resistance is less than 5 ohms.

  see step 4, page 10-1277
- No - resistance is not less than 5 ohms.

  Repair or replace the harness.

  see step 5, page 10-1277

4. Check for a short-circuit in the sensor harness.

a) Turn the key start switch to the off position.
b) Turn the battery disconnect switch to the off position.
c) Remove the key from the battery disconnect switch.
d) Disconnect the harness from the sensor, rear lighting module, right-hand belt tension sensor, and left-hand belt tension sensor connectors.
e) Check resistance between rear lighting module contact J2-3 to all other rear lighting module contacts.

Result

Expected result - resistance is more than 5000 ohms.

Results:

- Yes - resistance is more than 5000 ohms.

  see step 5, page 10-1277
- No - resistance is not more than 5000 ohms.

  Repair or replace the harness.

  see step 5, page 10-1277

5. Check if the diagnostic code remains.

a) Check and clean the harness connector contacts.
b) Connect all the connectors.
c) Turn the battery disconnect switch to the on position.
d) Turn the key start switch to the on position.
e) Operate the machine at low idle.
f) Check if the diagnostic code remains.

Result

Expected result - the diagnostic code is not active.

Results:

- Yes - SPN 46 FMI 03 is not active.

  Stop.
- No - SPN 46 FMI 03 is active.

  Failure of the module is possible but not common. Exit the procedure and do the procedure again. If the diagnostic code remains active, replace the module.

  Stop.

10.19.3.1 Air system pressure sensor electrical schematic

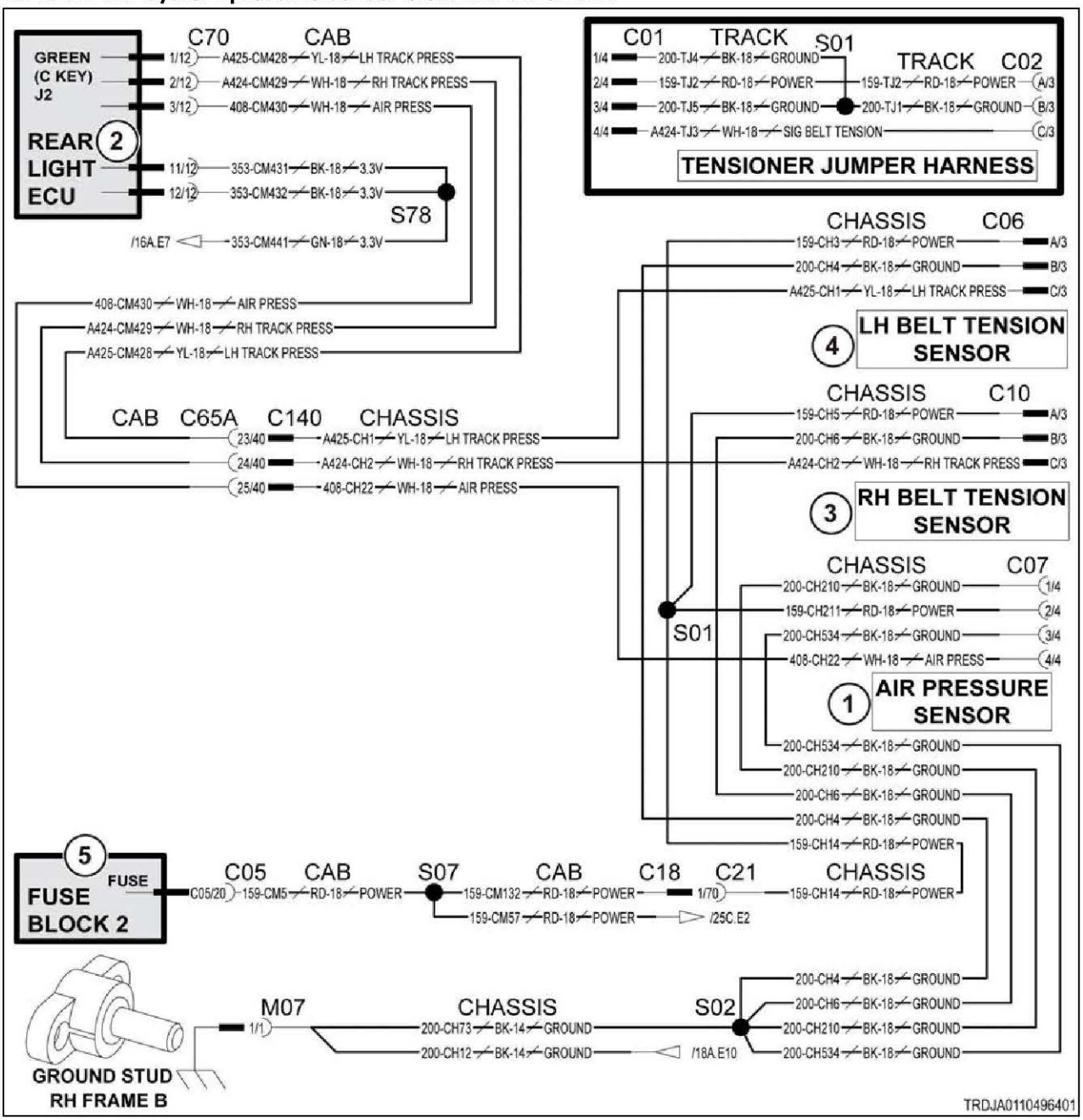

Fig. 719

Schematic legend		
Item	**Schematic term**	**Description**
1	AIR PRESSURE SENSOR	Air pressure sensor
2	REAR LIGHT ECU	Rear lighting module
3	RH BELT TENSION SENSOR	Right-hand belt tension sensor
4	LH BELT TENSION SENSOR	Left-hand belt tension sensor
5	FUSE BLOCK 2	Fuse block 2
--	LH TRACK PRESS	Left-hand track pressure
--	RH TRACK PRESS	Right-hand track pressure

Schematic legend		
Item	Schematic term	Description
--	AIR PRESS	Air pressure
--	SIG BELT TENSION	Signal belt tension
--	HIGH FLD ENGINE COVER LEFT	Left-hand high flood engine cover

10.19.4 Code SA 210 SPN 46 FMI 04

module has determined sensor circuit voltage is below normal.

Diagnosis and solution

1. Check for power at the sensor.
   a) Turn the battery disconnect switch to the on position.
   b) Turn the key start switch to the on position.
   c) Check voltage from contact 2 to frame ground at the sensor.

   Result

   Expected result - voltage is 12 volts.

   Results:

   - Yes - voltage is 12 volts.

     see step 2, page 10-1279
   - No - voltage is not 12 volts.

     Check the fuse block.

     If the fuse is good, repair or replace the harness.

     If the fuse is bad, replace the fuse.

     see step 3, page 10-1279

2. Check for a short-circuit in the sensor harness.
   a) Turn the key start switch to the off position.
   b) Turn the battery disconnect switch to the off position.
   c) Remove the key from the battery disconnect switch.
   d) Disconnect the harness from the sensor, rear lighting module, right-hand belt tension sensor, and left-hand belt tension sensor connectors.
   e) Check resistance between rear lighting module contact J2-3 to all other rear lighting module contacts.

   Result

   Expected result - resistance is more than 5000 ohms.

   Results:

   - Yes - resistance is more than 5000 ohms.

     see step 3, page 10-1279
   - No - resistance is not more than 5000 ohms.

     Repair or replace the harness.

     see step 3, page 10-1279

3. Check if the diagnostic code remains.
   a) Check and clean the harness connector contacts.
   b) Connect all the connectors.
   c) Turn the battery disconnect switch to the on position.

d) Turn the key start switch to the on position.
e) Operate the machine at low idle.
f) Check if the diagnostic code remains.

Result

Expected result - the diagnostic code is not active.

Results:

- Yes - SPN 46 FMI 04 is not active.

  Stop.
- No - SPN 46 FMI 04 is active.

  Failure of the module is possible but not common. Exit the procedure and do the procedure again. If the diagnostic code remains active, replace the module.

  Stop.

10.19.4.1 Air system pressure sensor electrical schematic

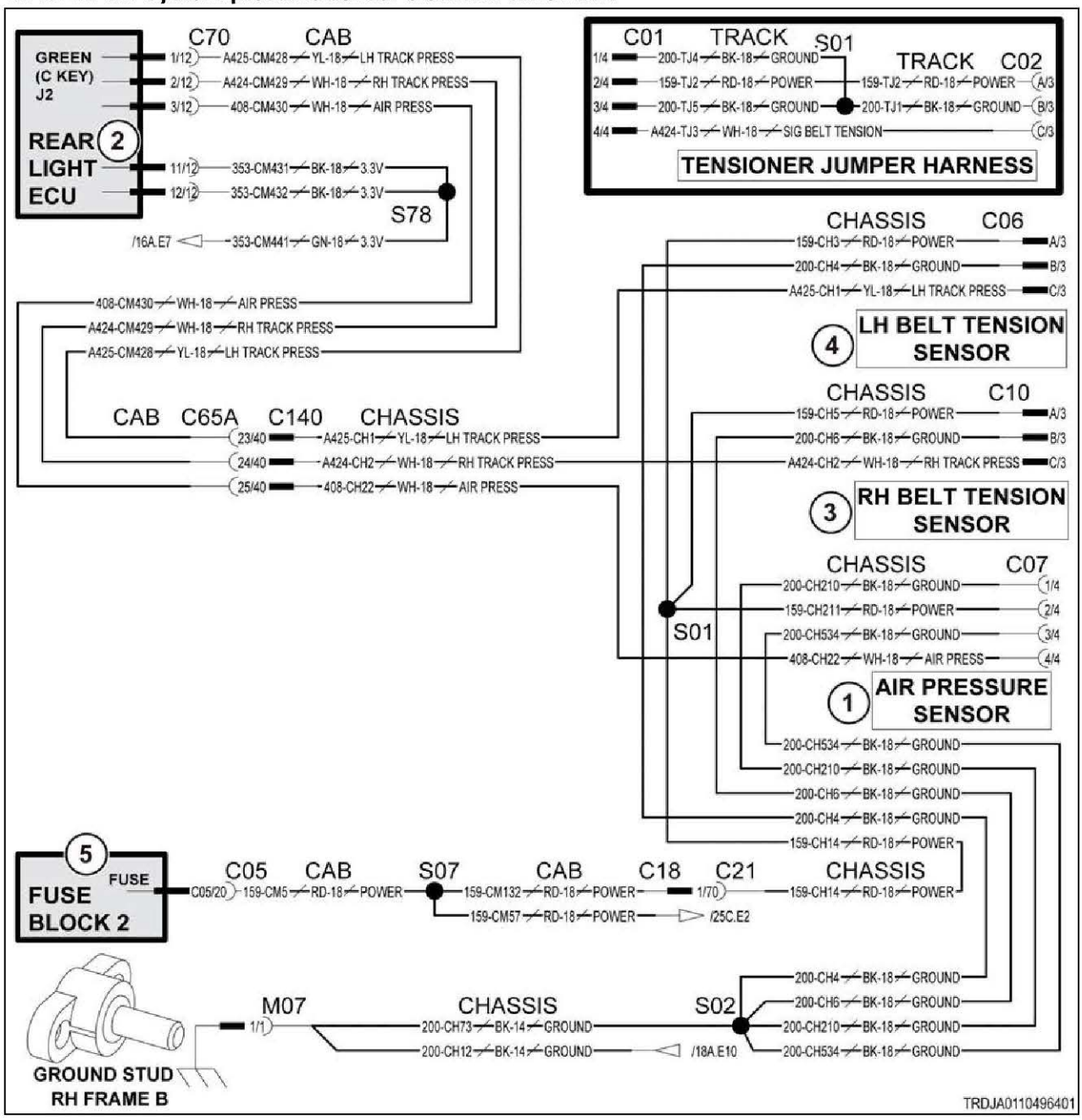

Fig. 720

Schematic legend		
Item	**Schematic term**	**Description**
1	AIR PRESSURE SENSOR	Air pressure sensor
2	REAR LIGHT ECU	Rear lighting module
3	RH BELT TENSION SENSOR	Right-hand belt tension sensor
4	LH BELT TENSION SENSOR	Left-hand belt tension sensor
5	FUSE BLOCK 2	Fuse block 2
--	LH TRACK PRESS	Left-hand track pressure
--	RH TRACK PRESS	Right-hand track pressure

Schematic legend		
Item	Schematic term	Description
--	AIR PRESS	Air pressure
--	SIG BELT TENSION	Signal belt tension
--	HIGH FLD ENGINE COVER LEFT	Left-hand high flood engine cover

10.19.5 Code SA 210 SPN 2210 FMI 02

Signal data is erratic, intermittent, or incorrect.

Diagnosis and solution

1. Check connectors J2 and J3 of the rear lighting module.
- a) Turn the key start switch to the off position.
- b) Turn the battery disconnect switch to the off position.
- c) Remove the key from the battery disconnect switch.
- d) Disconnect connectors J2 and J3 from the rear lighting module.
- e) Clean connectors J2 and J3.
- f) Connect connectors J2 and J3 to the rear lighting module.
- g) Turn the battery disconnect switch to the on position.
- h) Turn the key start switch to the on position.
- i) Operate the engine at low idle.
- j) Check for the diagnostic code.

Result

Expected result - diagnostic code is not active.

Results:

- Yes - diagnostic code is not active.

  see step 4, page 10-1283
- No - diagnostic code is active.

  see step 2, page 10-1282

2. Check for an open circuit in the harness.
- a) Turn the key start switch to the off position.
- b) Turn the battery disconnect switch to the off position.
- c) Remove the key from the battery disconnect switch.
- d) Disconnect the connectors from the rear lighting module.
- e) Check resistance from contact J2-11 to contact J3-8 on the rear lighting module.
- f) Check resistance from contact J2-12 to contact J3-8 on the rear lighting module.

Result

Expected result - each resistance is more than 5000 ohms.

Results:

- Yes - each resistance is more than 5000 ohms.

  see step 3, page 10-1282
- No - one or more resistance is not more than 5000 ohms.

  Repair or replace the harness.

  see step 4, page 10-1283

3. Check for a short-circuit in the harness.

a) Turn the key start switch to the off position.
b) Turn the battery disconnect switch to the off position.
c) Remove the key from the battery disconnect switch.
d) Disconnect the connectors from the rear lighting module.
e) Check resistance from contact J3-8 to all other rear lighting module contacts.
f) Check resistance from contact J2-11 to all other rear lighting module contacts.
g) Check resistance from contact J2-12 to all other rear lighting module contacts.

Result

Expected result - each resistance is more than 5000 ohms.

Results:

- Yes - each resistance is more than 5000 ohms.

  see step 4, page 10-1283
- No - one or more resistance is not more than 5000 ohms.

  Repair or replace the harness.

  see step 4, page 10-1283

4. Check if the diagnostic code remains.

a) Check and clean the harness connector contacts.
b) Connect all the connectors.
c) Turn the battery disconnect switch to the on position.
d) Turn the key start switch to the on position.
e) Operate the machine at low idle.
f) Check if the diagnostic code remains.

Result

Expected result - the diagnostic code is not active.

Results:

- Yes - SPN 2210 FMI 02 is not active.

  Stop.
- No - SPN 2210 FMI 02 is active.

  Failure of the module is possible but not common. Exit the procedure and do the procedure again. If the diagnostic code remains active, replace the module.

  Stop.

10.19.5.1 Rear lighting module address schematic

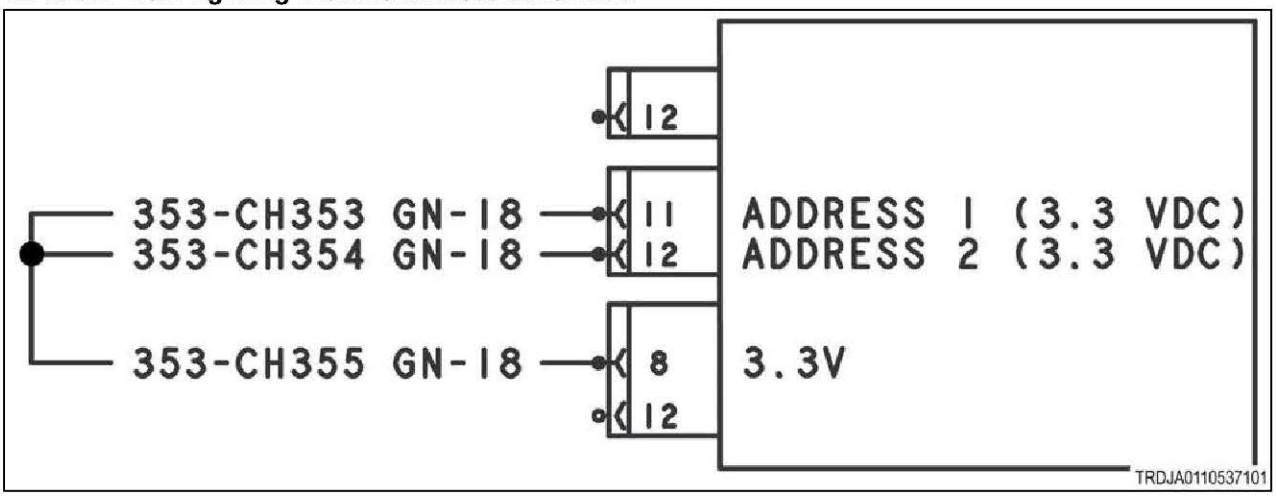

Fig. 721

10.19.6 Code SA 210 SPN 2368 FMI 05

Rear lighting module has determined circuit current is below normal.

Diagnosis and solution

1. Check the switch operation.

a) Turn the key start switch to the off position.
b) Turn the battery disconnect switch to the off position.
c) Remove the key from the battery disconnect switch.
d) Disconnect the roading lamp switch connector and put the switch in the off position.
e) Check resistance between contact 6 and contact 7 on the rear lighting module.
f) Check resistance between contact 6 and contact 8 on the rear lighting module.

Result

Expected result - resistance is more than 5000 ohms.

Results:

- Yes - resistance is more than 5000 ohms.

  see step 2, page 10-1284
- No - resistance is not more than 5000 ohms.

  Replace the switch.

  see step 4, page 10-1285

2. Check the switch operation.

a) Turn the key start switch to the off position.
b) Turn the battery disconnect switch to the off position.
c) Remove the key from the battery disconnect switch.
d) Disconnect the roading lamp switch connector.
e) Actuate the left-hand turn signal lamp switch.
f) Check resistance from contact 6 and contact 7 on the rear lighting module.
g) Actuate the right-hand turn signal lamp switch.
h) Check resistance from contact 7 and contact 8 on the rear lighting module.

Result

Expected result - resistance is less than 5 ohms.

Results:

- Yes - resistance is less than 5 ohms.

  see step 3, page 10-1285
- No - resistance is not less than 5 ohms.

  Replace the switch.

  see step 4, page 10-1285

3. Check for an open circuit in the harness.

a) Turn the key start switch to the off position.
b) Turn the battery disconnect switch to the off position.
c) Remove the key from the battery disconnect switch.
d) Disconnect the rear lighting, left-hand external turn lamp, left-hand park brake lamp, and left-hand turn lamp connectors.
e) Put a jumper wire between left-hand external turn contact 4 and left-hand turn contact A.
f) Check resistance from contact J2-6 to contact J2-4 on the rear lighting module.

Result

Expected result - resistance is less than 5 ohms.

Results:

- Yes - resistance is less than 5 ohms.

  see step 4, page 10-1285
- No - resistance is not less than 5 ohms.

  Repair or replace the harness.

  see step 4, page 10-1285

4. Check if the diagnostic code remains.

a) Check and clean the harness connector contacts.
b) Connect all the connectors.
c) Turn the battery disconnect switch to the on position.
d) Turn the key start switch to the on position.
e) Operate the machine at low idle.
f) Check if the diagnostic code remains.

Result

Expected result - the diagnostic code is not active.

Results:

- Yes - SPN 2368 FMI 05 is not active.

  Stop.
- No - SPN 2368 FMI 05 is active.

  Failure of the module is possible but not common. Exit the procedure and do the procedure again. If the diagnostic code remains active, replace the module.

  Stop.

10.19.6.1 Turn signal lamps electrical schematic

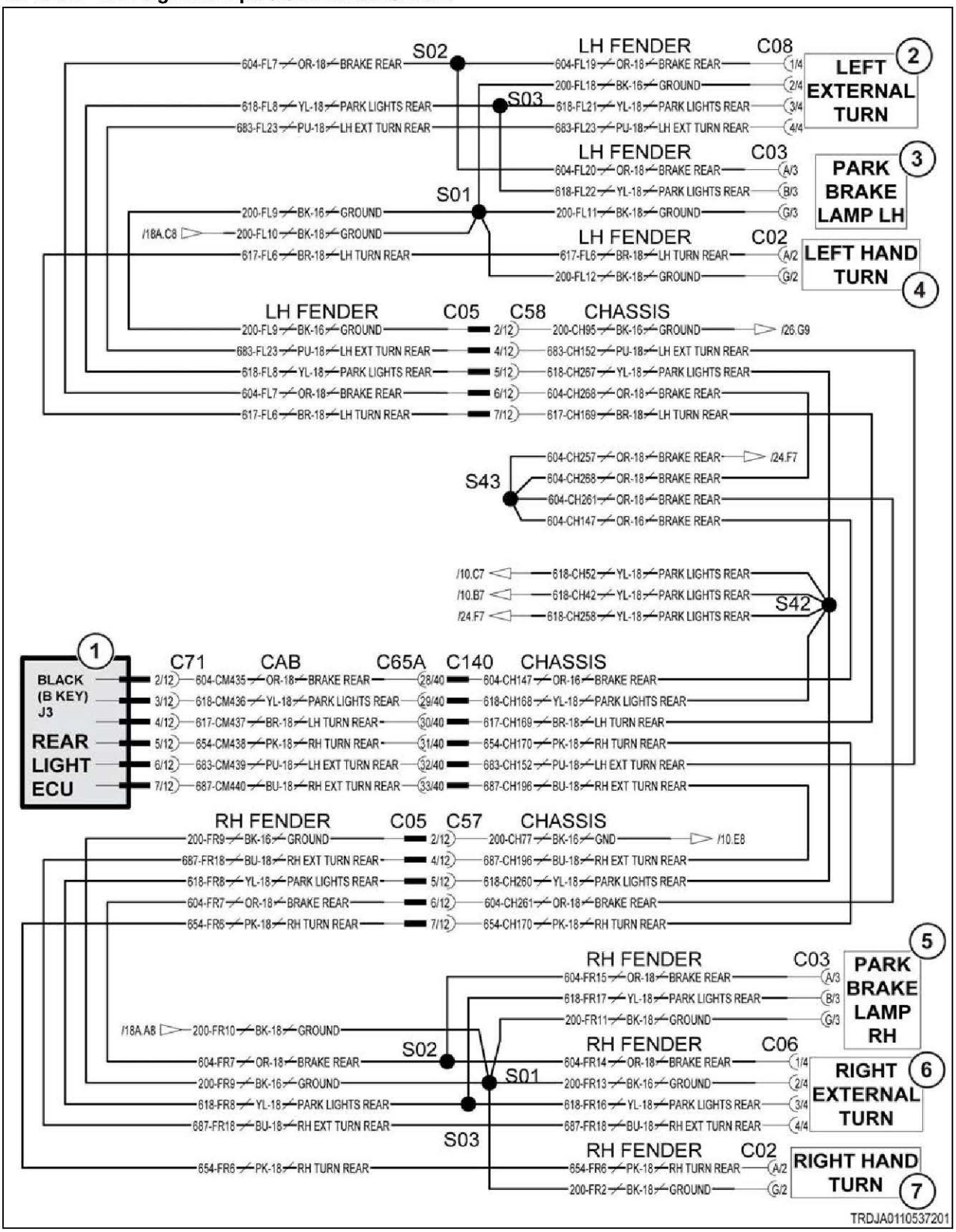

Fig. 722

Schematic legend		
Item	Schematic term	Description
1	REAR LIGHT ECU	Rear lighting module
2	LEFT EXTERNAL TURN	Left-hand external turn lamp
3	PARK BRAKE LAMP LH	Left-hand park brake lamp
4	LEFT HAND TURN	Left-hand turn
5	PARK BRAKE LAMP RH	Right-hand park brake lamp
6	RIGHT EXTERNAL TURN	Right-hand external turn lamp
7	RIGHT HAND TURN	Right-hand turn
--	PARK LIGHTS REAR	Rear parking lamps
--	LH EXT TURN REAR	Left-hand external turn rear
--	RH EXT TURN REAR	Right-hand external turn rear

10.19.7 Code SA 210 SPN 2368 FMI 06

Rear lighting module has determined circuit current is above normal.

Diagnosis and solution

1. Check the switch operation.

a) Turn the key start switch to the off position.
b) Turn the battery disconnect switch to the off position.
c) Remove the key from the battery disconnect switch.
d) Disconnect the roading light switch connector and put the switch in the off position.
e) Check resistance between contact 6 and contact 7 on the rear lighting module.
f) Check resistance between contact 6 and contact 8 on the rear lighting module.

Result

Expected result - resistance is more than 5000 ohms.

Results:

- Yes - resistance is more than 5000 ohms.

  see step 2, page 10-1287
- No - resistance is not more than 5000 ohms.

  Replace the switch.

  see step 4, page 10-1288

2. Check the switch operation.

a) Turn the key start switch to the off position.
b) Turn the battery disconnect switch to the off position.
c) Remove the key from the battery disconnect switch.
d) Disconnect the roading lamp switch connector.
e) Actuate the left-hand turn signal lamp switch.
f) Check resistance from contact 6 and contact 7 on the rear lighting module.
g) Actuate the right-hand turn signal lamp switch.
h) Check resistance from contact 7 and contact 8 on the rear lighting module.

Result

Expected result - resistance is less than 5 ohms.

Results:

- Yes - resistance is less than 5 ohms.

  see step 3, page 10-1288
- No - resistance is not less than 5 ohms.

  Replace the switch.

  see step 4, page 10-1288

3. Check for a short-circuit in the harness.

a) Turn the key start switch to the off position.
b) Turn the battery disconnect switch to the off position.
c) Remove the key from the battery disconnect switch.
d) Disconnect all rear lighting module connectors.
e) Check resistance from rear lighting module contact J3-4 to all other rear lighting module contacts.

Result

Expected result - each resistance is more than 5000 ohms.

Results:

- Yes - each resistance is more than 5000 ohms.

  see step 4, page 10-1288
- No - resistance is not more than 5000 ohms.

  Repair or replace the harness.

  see step 4, page 10-1288

4. Check if the diagnostic code remains.

a) Check and clean the harness connector contacts.
b) Connect all the connectors.
c) Turn the battery disconnect switch to the on position.
d) Turn the key start switch to the on position.
e) Operate the machine at low idle.
f) Check if the diagnostic code remains.

Result

Expected result - the diagnostic code is not active.

Results:

- Yes - SPN 2368 FMI 06 is not active.

  Stop.
- No - SPN 2368 FMI 06 is active.

  Failure of the module is possible but not common. Exit the procedure and do the procedure again. If the diagnostic code remains active, replace the module.

  Stop.

10.19.7.1 Turn signal lamps electrical schematic

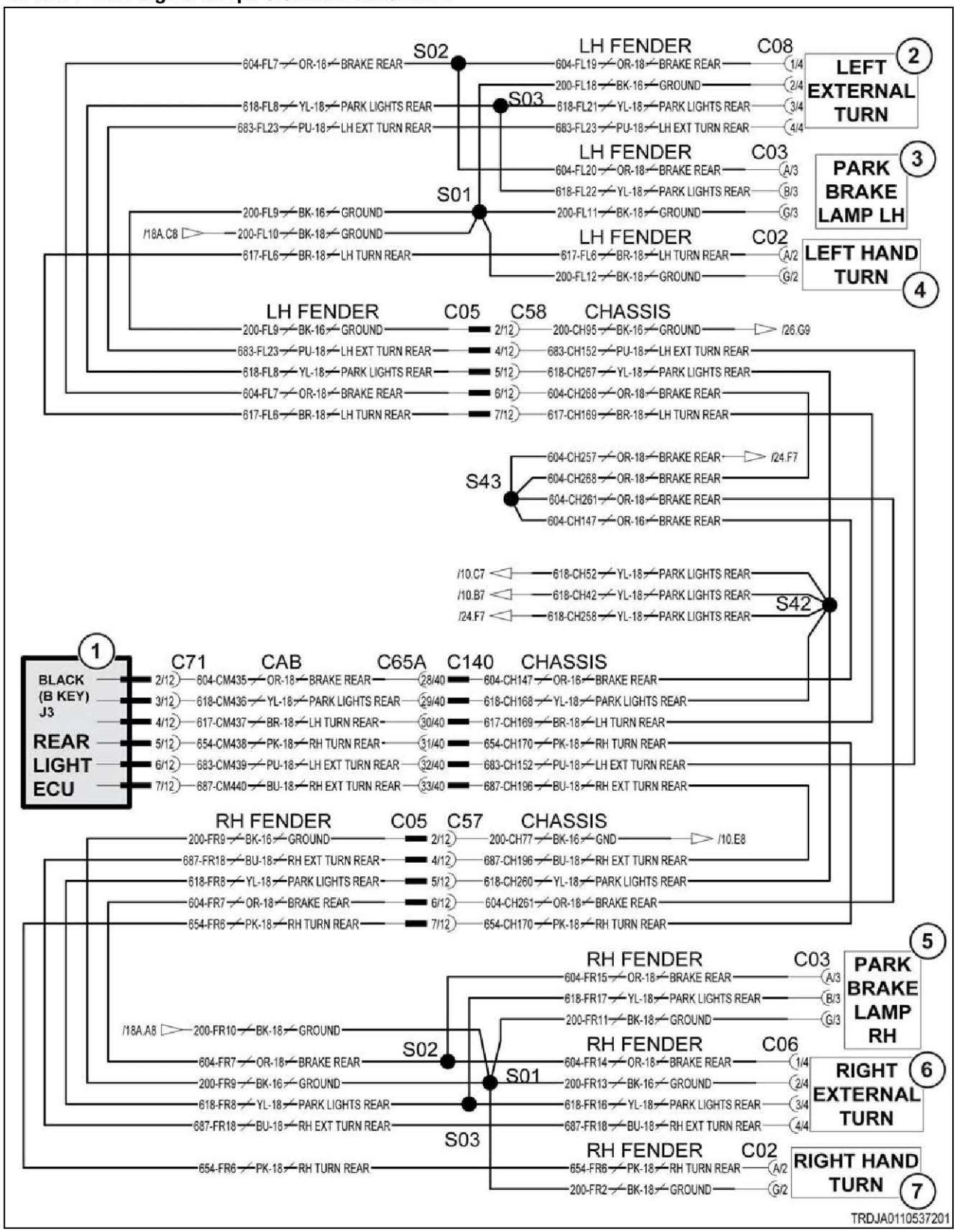

Fig. 723

Schematic legend		
Item	Schematic term	Description
1	REAR LIGHT ECU	Rear lighting module
2	LEFT EXTERNAL TURN	Left-hand external turn lamp
3	PARK BRAKE LAMP LH	Left-hand park brake lamp
4	LEFT HAND TURN	Left-hand turn
5	PARK BRAKE LAMP RH	Right-hand park brake lamp
6	RIGHT EXTERNAL TURN	Right-hand external turn lamp
7	RIGHT HAND TURN	Right-hand turn
--	PARK LIGHTS REAR	Rear parking lamps
--	LH EXT TURN REAR	Left-hand external turn rear
--	RH EXT TURN REAR	Right-hand external turn rear

10.19.8 Code SA 210 SPN 2370 FMI 05

Rear lighting module has determined circuit current is below normal.

Diagnosis and solution

1. Check the switch operation.

a) Turn the key start switch to the off position.
b) Turn the battery disconnect switch to the off position.
c) Remove the key from the battery disconnect switch.
d) Disconnect the roading lamp switch connector and put the switch in the off position.
e) Check resistance between contact 6 and contact 7 on the rear lighting module.
f) Check resistance between contact 6 and contact 8 on the rear lighting module.

Result

Expected result - resistance is more than 5000 ohms.

Results:

- Yes - resistance is more than 5000 ohms.

  see step 2, page 10-1290
- No - resistance is not more than 5000 ohms.

  Replace the switch.

  see step 4, page 10-1291

2. Check the switch operation.

a) Turn the key start switch to the off position.
b) Turn the battery disconnect switch to the off position.
c) Remove the key from the battery disconnect switch.
d) Disconnect the roading lamp switch connector.
e) Actuate the left-hand turn signal lamp switch.
f) Check resistance from contact 6 and contact 7 on the rear lighting module.
g) Actuate the right-hand turn signal lamp switch.
h) Check resistance from contact 7 and contact 8 on the rear lighting module.

Result

Expected result - resistance is less than 5 ohms.

Results:

- Yes - resistance is less than 5 ohms.

  see step 3, page 10-1291
- No - resistance is not less than 5 ohms.

  Replace the switch.

  see step 4, page 10-1291

3. Check for an open circuit in the harness.

a) Turn the key start switch to the off position.
b) Turn the battery disconnect switch to the off position.
c) Remove the key from the battery disconnect switch.
d) Disconnect the rear lighting, right-hand external turn, right-hand park brake lamp, and right-hand turn lamp connectors.
e) Put a jumper wire between right-hand external turn contact 4 and right-hand turn contact A.
f) Check resistance from contact J3-5 to contact J3-7 on the rear lighting module.

Result

Expected result - resistance is less than 5 ohms.

Results:

- Yes - resistance is less than 5 ohms.

  see step 4, page 10-1291
- No - resistance is not less than 5 ohms.

  Repair or replace the harness.

  see step 4, page 10-1291

4. Check if the diagnostic code remains.

a) Check and clean the harness connector contacts.
b) Connect all the connectors.
c) Turn the battery disconnect switch to the on position.
d) Turn the key start switch to the on position.
e) Operate the machine at low idle.
f) Check if the diagnostic code remains.

Result

Expected result - the diagnostic code is not active.

Results:

- Yes - SPN 2370 FMI 05 is not active.

  Stop.
- No - SPN 2370 FMI 05 is active.

  Failure of the module is possible but not common. Exit the procedure and do the procedure again. If the diagnostic code remains active, replace the module.

  Stop.

10.19.8.1 Turn signal lamps electrical schematic

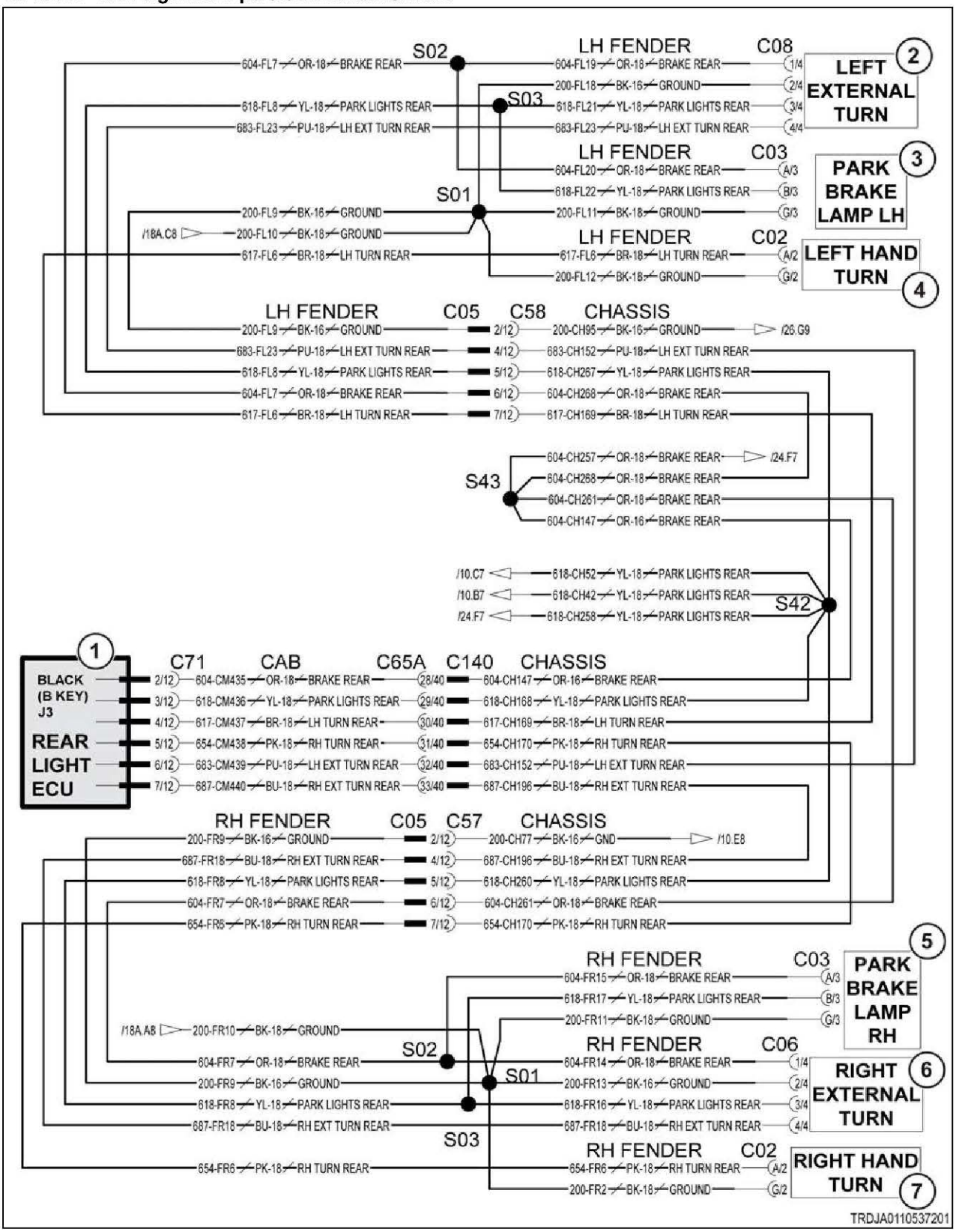

Fig. 724

Schematic legend		
Item	Schematic term	Description
1	REAR LIGHT ECU	Rear lighting module
2	LEFT EXTERNAL TURN	Left-hand external turn lamp
3	PARK BRAKE LAMP LH	Left-hand park brake lamp
4	LEFT HAND TURN	Left-hand turn
5	PARK BRAKE LAMP RH	Right-hand park brake lamp
6	RIGHT EXTERNAL TURN	Right-hand external turn lamp
7	RIGHT HAND TURN	Right-hand turn
--	PARK LIGHTS REAR	Rear parking lamps
--	LH EXT TURN REAR	Left-hand external turn rear
--	RH EXT TURN REAR	Right-hand external turn rear

10.19.9 Code SA 210 SPN 2370 FMI 06

Rear lighting module has determined circuit current is above normal.

Diagnosis and solution

1. Check the switch operation.

a) Turn the key start switch to the off position.
b) Turn the battery disconnect switch to the off position.
c) Remove the key from the battery disconnect switch.
d) Disconnect the roading light switch connector and put the switch in the off position.
e) Check resistance between contact 6 and contact 7 on the rear lighting module.
f) Check resistance between contact 6 and contact 8 on the rear lighting module.

Result

Expected result - resistance is more than 5000 ohms.

Results:

- Yes - resistance is more than 5000 ohms.

  see step 2, page 10-1293
- No - resistance is not more than 5000 ohms.

  Replace the switch.

  see step 4, page 10-1294

2. Check the switch operation.

a) Turn the key start switch to the off position.
b) Turn the battery disconnect switch to the off position.
c) Remove the key from the battery disconnect switch.
d) Disconnect the roading light switch connector.
e) Actuate the left-hand turn signal lamp switch.
f) Check resistance from contact 6 and contact 7 on the rear lighting module.
g) Actuate the right-hand turn signal lamp switch.
h) Check resistance from contact 7 and contact 8 on the rear lighting module.

Result

Expected result - resistance is less than 5 ohms.

Results:

- Yes - resistance is less than 5 ohms.

  see step 3, page 10-1294
- No - resistance is not less than 5 ohms.

  Replace the switch.

  see step 4, page 10-1294

3. Check for a short-circuit in the harness.

a) Turn the key start switch to the off position.
b) Turn the battery disconnect switch to the off position.
c) Remove the key from the battery disconnect switch.
d) Disconnect all rear lighting module connectors.
e) Check resistance from rear lighting module contact J3-5 to all other rear lighting module contacts.

Result

Expected result - each resistance is more than 5000 ohms.

Results:

- Yes - each resistance is more than 5000 ohms.

  see step 4, page 10-1294
- No - resistance is not more than 5000 ohms.

  Repair or replace the harness.

  see step 4, page 10-1294

4. Check if the diagnostic code remains.

a) Check and clean the harness connector contacts.
b) Connect all the connectors.
c) Turn the battery disconnect switch to the on position.
d) Turn the key start switch to the on position.
e) Operate the machine at low idle.
f) Check if the diagnostic code remains.

Result

Expected result - the diagnostic code is not active.

Results:

- Yes - SPN 2370 FMI 06 is not active.

  Stop.
- No - SPN 2370 FMI 06 is active.

  Failure of the module is possible but not common. Exit the procedure and do the procedure again. If the diagnostic code remains active, replace the module.

  Stop.

10.19.9.1 Turn signal lamps electrical schematic

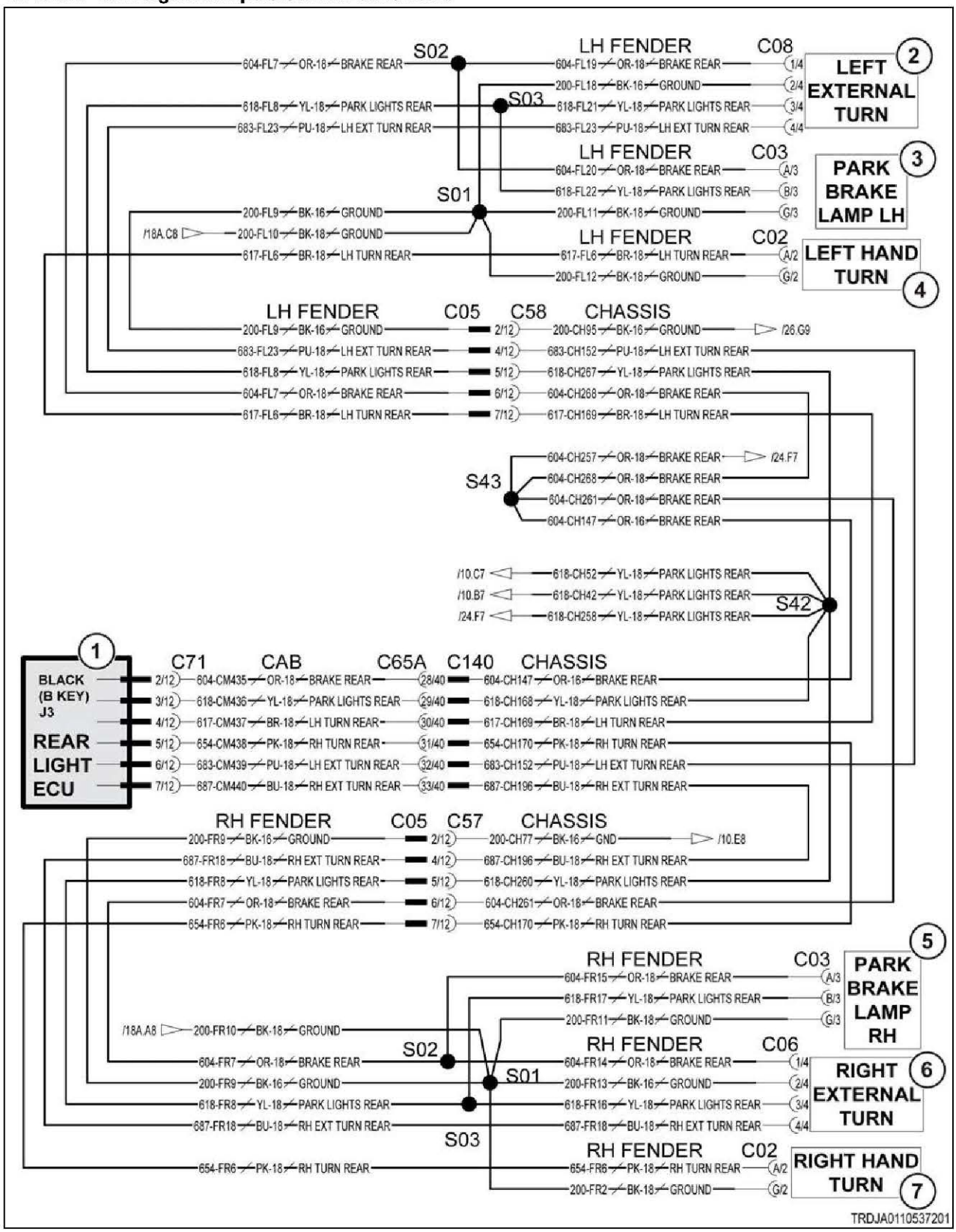

Fig. 725

Schematic legend		
Item	Schematic term	Description
1	REAR LIGHT ECU	Rear lighting module
2	LEFT EXTERNAL TURN	Left-hand external turn lamp
3	PARK BRAKE LAMP LH	Left-hand park brake lamp
4	LEFT HAND TURN	Left-hand turn
5	PARK BRAKE LAMP RH	Right-hand park brake lamp
6	RIGHT EXTERNAL TURN	Right-hand external turn lamp
7	RIGHT HAND TURN	Right-hand turn
--	PARK LIGHTS REAR	Rear parking lamps
--	LH EXT TURN REAR	Left-hand external turn rear
--	RH EXT TURN REAR	Right-hand external turn rear

10.19.10 Code SA 210 SPN 2376 FMI 05

Rear lighting module has determined circuit current is below normal.

Diagnosis and solution

1. Check for an open circuit in the harness.

a) Turn the key start switch to the off position.
b) Turn the battery disconnect switch to the off position.
c) Remove the key from the battery disconnect switch.
d) Put a jumper wire in the left-hand external turn lamp connector between contact 1 and contact 2.
e) Check resistance from contact J3-2 to contact J3-10 on the rear lighting module.
f) Move the jumper wire to left-hand park/brake lamp connector between contact A and contact G.
g) Check resistance from contact J3-2 to contact J3-10 on the rear lighting module.
h) Move the jumper wire to right-hand external turn lamp connector between contact 1 and contact 2.
i) Check resistance from contact J3-2 to contact J3-10 on the rear lighting module.
j) Move the jumper wire to right-hand park/brake lamp connector between contact A and contact G.
k) Check resistance from contact J3-2 to contact J3-10 on the rear lighting module.

Result

Expected result - each resistance is less than 5 ohms.

Results:

- Yes - each resistance is less than 5 ohms.

  see step 2, page 10-1296
- No - one or more resistance is not less than 5 ohms.

  Repair or replace the harness.

  see step 2, page 10-1296

2. Check if the diagnostic code remains.

a) Check and clean the harness connector contacts.
b) Connect all the connectors.
c) Turn the battery disconnect switch to the on position.
d) Turn the key start switch to the on position.
e) Operate the machine at low idle.
f) Check if the diagnostic code remains.

Result

Expected result - the diagnostic code is not active.

Results:

- Yes - SPN 2376 FMI 05 is not active.

  Stop.
- No - SPN 2376 FMI 05 is active.

  Failure of the module is possible but not common. Exit the procedure and do the procedure again. If the diagnostic code remains active, replace the module.

  Stop.

10.19.10.1 Turn signal lamps electrical schematic

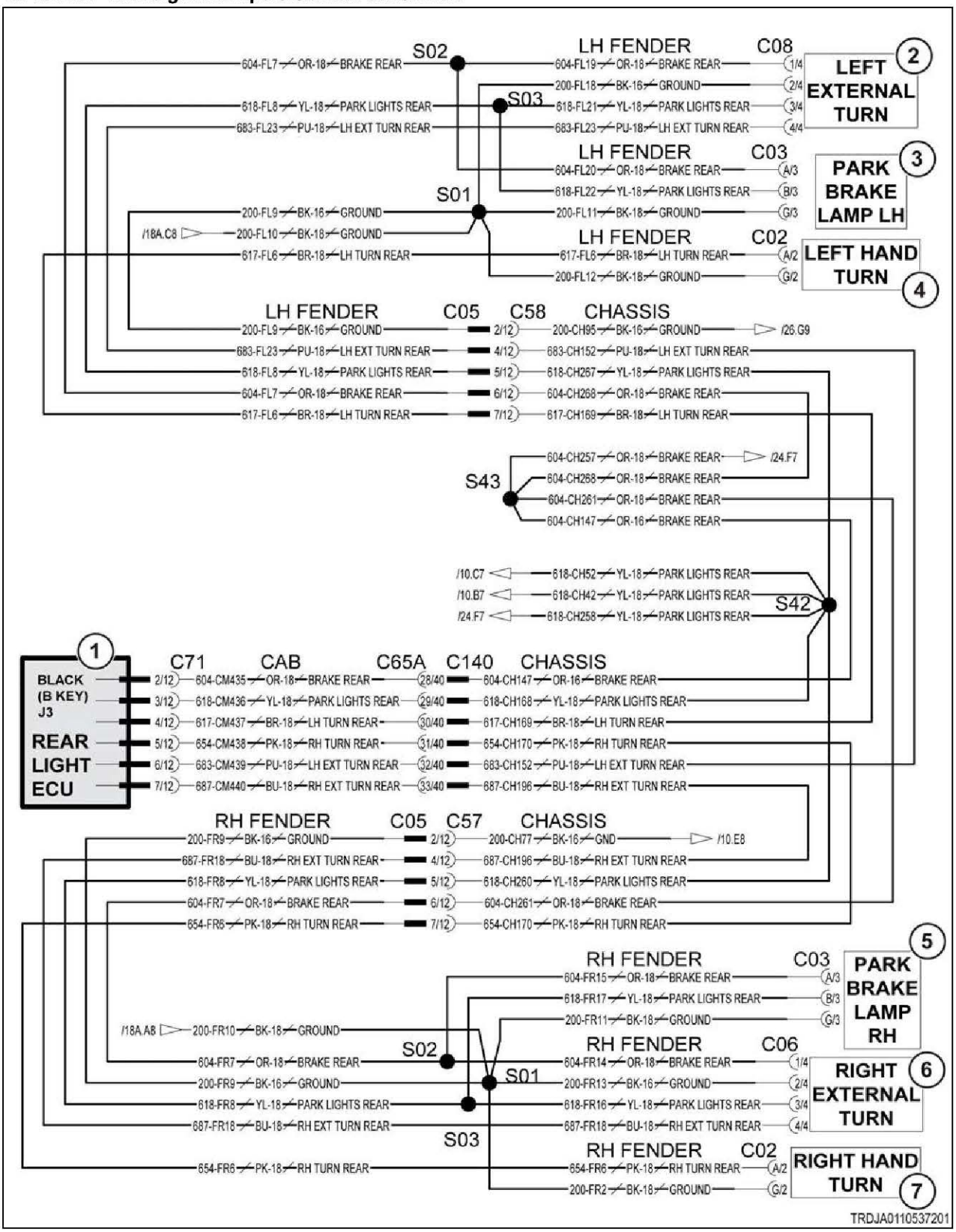

Fig. 726

Schematic legend		
Item	Schematic term	Description
1	REAR LIGHT ECU	Rear lighting module
2	LEFT EXTERNAL TURN	Left-hand external turn lamp
3	PARK BRAKE LAMP LH	Left-hand park brake lamp
4	LEFT HAND TURN	Left-hand turn
5	PARK BRAKE LAMP RH	Right-hand park brake lamp
6	RIGHT EXTERNAL TURN	Right-hand external turn lamp
7	RIGHT HAND TURN	Right-hand turn
--	PARK LIGHTS REAR	Rear parking lamps
--	LH EXT TURN REAR	Left-hand external turn rear
--	RH EXT TURN REAR	Right-hand external turn rear

10.19.11 Code SA 210 SPN 2376 FMI 06

Rear lighting module has determined circuit current is above normal.

Diagnosis and solution

1. Check for a short-circuit in the harness.

a) Turn the key start switch to the off position.
b) Turn the battery disconnect switch to the off position.
c) Remove the key from the battery disconnect switch.
d) Disconnect the harness connectors from the rear lighting module and the left-hand and right-hand fender lamp harnesses.
e) Check resistance from contact J3-2 to all the other contacts on the rear lighting module.

Result

Expected result - each resistance is more than 5000 ohms.

Results:

- Yes - each resistance is more than 5000 ohms.

  see step 2, page 10-1299
- No - one or more resistance is not more than 5000 ohms.

  Repair or replace the harness.

  see step 2, page 10-1299

2. Check if the diagnostic code remains.

a) Check and clean the harness connector contacts.
b) Connect all the connectors.
c) Turn the battery disconnect switch to the on position.
d) Turn the key start switch to the on position.
e) Operate the machine at low idle.
f) Check if the diagnostic code remains.

Result

Expected result - the diagnostic code is not active.

Results:

- Yes - SPN 2376 FMI 06 is not active.

  Stop.
- No - SPN 2376 FMI 06 is active.

  Failure of the module is possible but not common. Exit the procedure and do the procedure again. If the diagnostic code remains active, replace the module.

  Stop.

10.19.11.1 Turn signal lamps electrical schematic

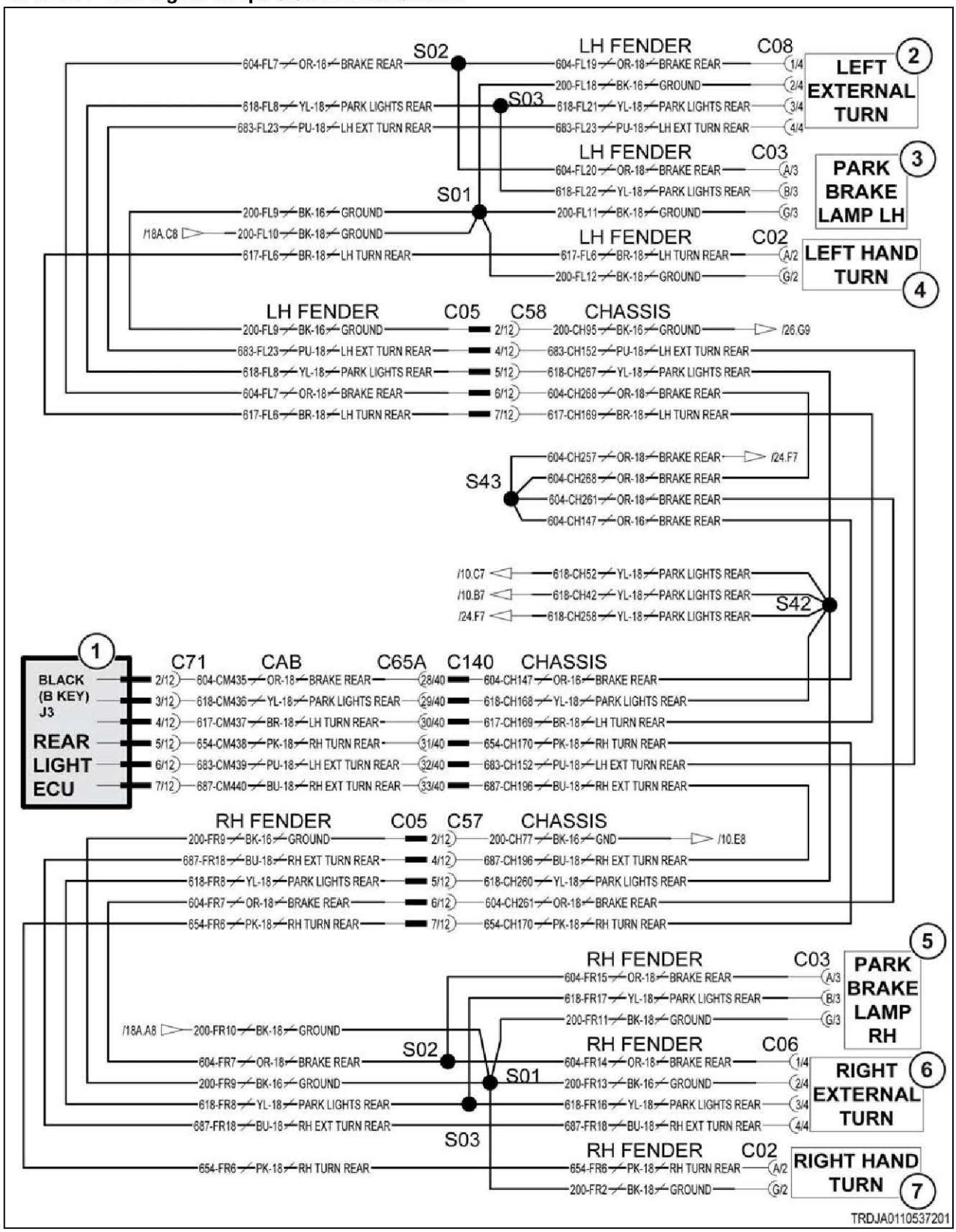

Fig. 727

Schematic legend		
Item	Schematic term	Description
1	REAR LIGHT ECU	Rear lighting module
2	LEFT EXTERNAL TURN	Left-hand external turn lamp
3	PARK BRAKE LAMP LH	Left-hand park brake lamp
4	LEFT HAND TURN	Left-hand turn
5	PARK BRAKE LAMP RH	Right-hand park brake lamp
6	RIGHT EXTERNAL TURN	Right-hand external turn lamp
7	RIGHT HAND TURN	Right-hand turn
--	PARK LIGHTS REAR	Rear parking lamps
--	LH EXT TURN REAR	Left-hand external turn rear
--	RH EXT TURN REAR	Right-hand external turn rear

10.19.12 Code SA 210 SPN 2392 FMI 05

Rear lighting module has determined circuit current is below normal.

Diagnosis and solution

1. Check for an open circuit in the harness.

a) Turn the key start switch to the off position.
b) Turn the battery disconnect switch to the off position.
c) Remove the key from the battery disconnect switch.
d) Disconnect the harness connectors from the rear lighting module, the right-hand reverse lamp, the left-hand reverse lamp, and the reverse alarm.
e) Put a jumper wire in the left-hand reverse lamp connector between contact A and contact B.
f) Check resistance from contact J3-1 to contact J3-10 on the rear lighting module.
g) Move the jumper wire to the right-hand reverse lamp connector between contact A and contact B.
h) Check resistance from contact J3-1 to contact J3-10 on the rear lighting module.
i) Move the jumper wire to the reverse alarm connector between contact 1 and contact 2.
j) Check resistance from contact J3-1 to contact J3-10 on the rear lighting module.

Result

Expected result - each resistance is less than 5 ohms.

Results:

- Yes - each resistance is less than 5 ohms.

  see step 2, page 10-1302
- No - one or more resistance is not less than 5 ohms.

  Repair or replace the harness.

  see step 2, page 10-1302

2. Check if the diagnostic code remains.

a) Check and clean the harness connector contacts.
b) Connect all the connectors.
c) Turn the battery disconnect switch to the on position.
d) Turn the key start switch to the on position.
e) Operate the machine at low idle.
f) Check if the diagnostic code remains.

Result

Expected result - the diagnostic code is not active.

Results:

- Yes - SPN 2392 FMI 05 is not active.

  Stop.
- No - SPN 2392 FMI 05 is active.

  Failure of the module is possible but not common. Exit the procedure and do the procedure again. If the diagnostic code remains active, replace the module.

  Stop.

10.19.12.1 Reverse lamps electrical schematic

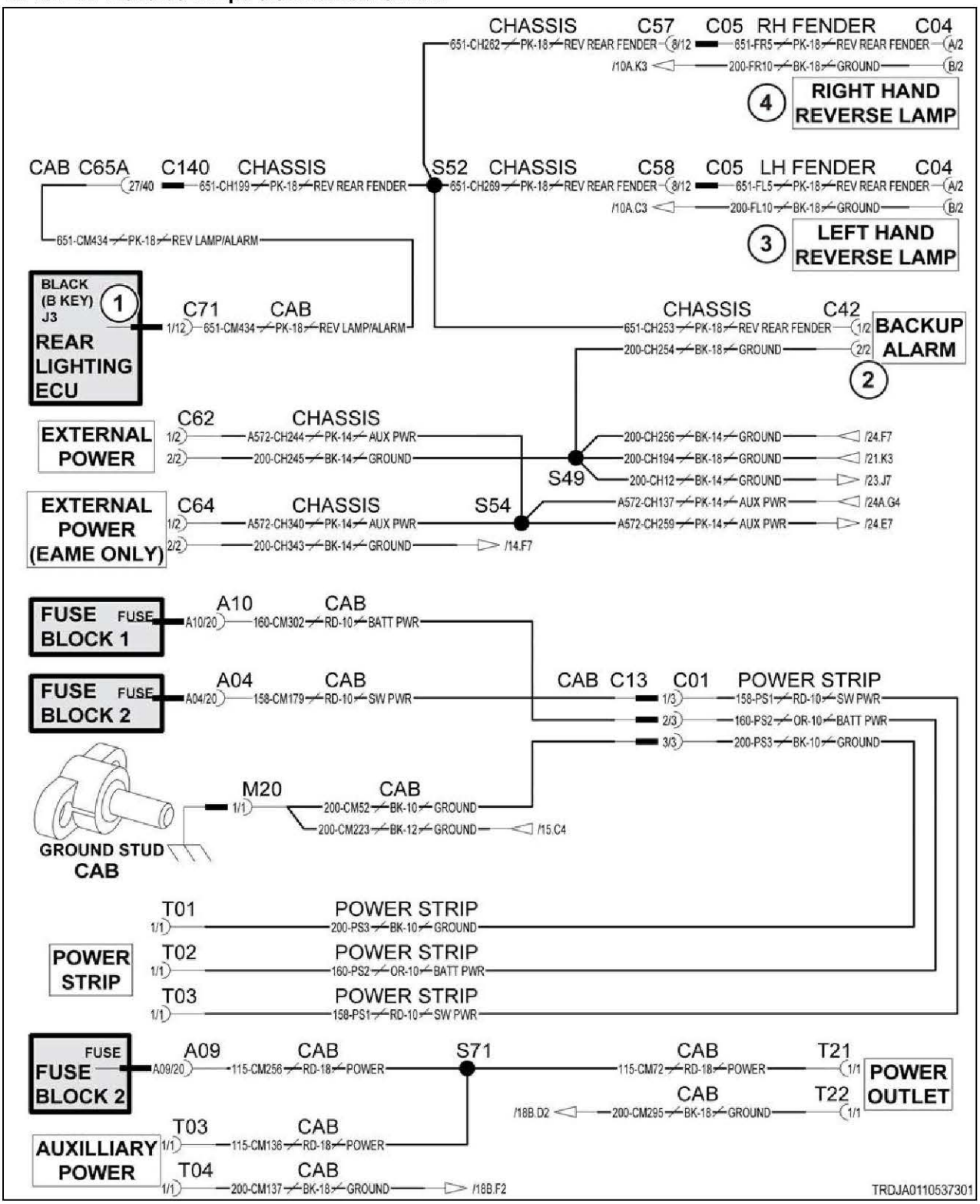

Fig. 728

Schematic legend		
Item	Schematic term	Description
1	REAR LIGHT ECU	Rear lighting module
2	BACKUP ALARM	Reverse alarm
3	LEFT HAND REVERSE LAMP	Left-hand reverse lamp
4	RIGHT HAND REVERSE LAMP	Right-hand reverse lamp
--	REV LAMP/ALARM	Reverse lamp/alarm
--	AUX PWR	Auxiliary power
--	SW PWR	Switch power
--	BATT PWR	Battery power

10.19.13 Code SA 210 SPN 2392 FMI 06

Rear lighting module has determined circuit current is above normal.

Diagnosis and solution

1. Check for a short-circuit in the harness.

a) Turn the key start switch to the off position.
b) Turn the battery disconnect switch to the off position.
c) Remove the key from the battery disconnect switch.
d) Disconnect the harness connectors from the rear lighting module, the right-hand reverse lamps, the left-hand reverse lamps, and the reverse alarm.
e) Check resistance from contact J3-1 to all the other contacts on the rear lighting module.

Result

Expected result - each resistance is more than 5000 ohms.

Results:

- Yes - each resistance is more than 5000 ohms.

  see step 2, page 10-1305
- No - one or more resistance is not more than 5000 ohms.

  Repair or replace the harness.

  see step 2, page 10-1305

2. Check if the diagnostic code remains.

a) Check and clean the harness connector contacts.
b) Connect all the connectors.
c) Turn the battery disconnect switch to the on position.
d) Turn the key start switch to the on position.
e) Operate the machine at low idle.
f) Check if the diagnostic code remains.

Result

Expected result - the diagnostic code is not active.

Results:

- Yes - SPN 2392 FMI 06 is not active.

  Stop.

- No - SPN 2392 FMI 06 is active.

  Failure of the module is possible but not common. Exit the procedure and do the procedure again. If the diagnostic code remains active, replace the module.

  Stop.

10.19.13.1 Reverse lamps electrical schematic

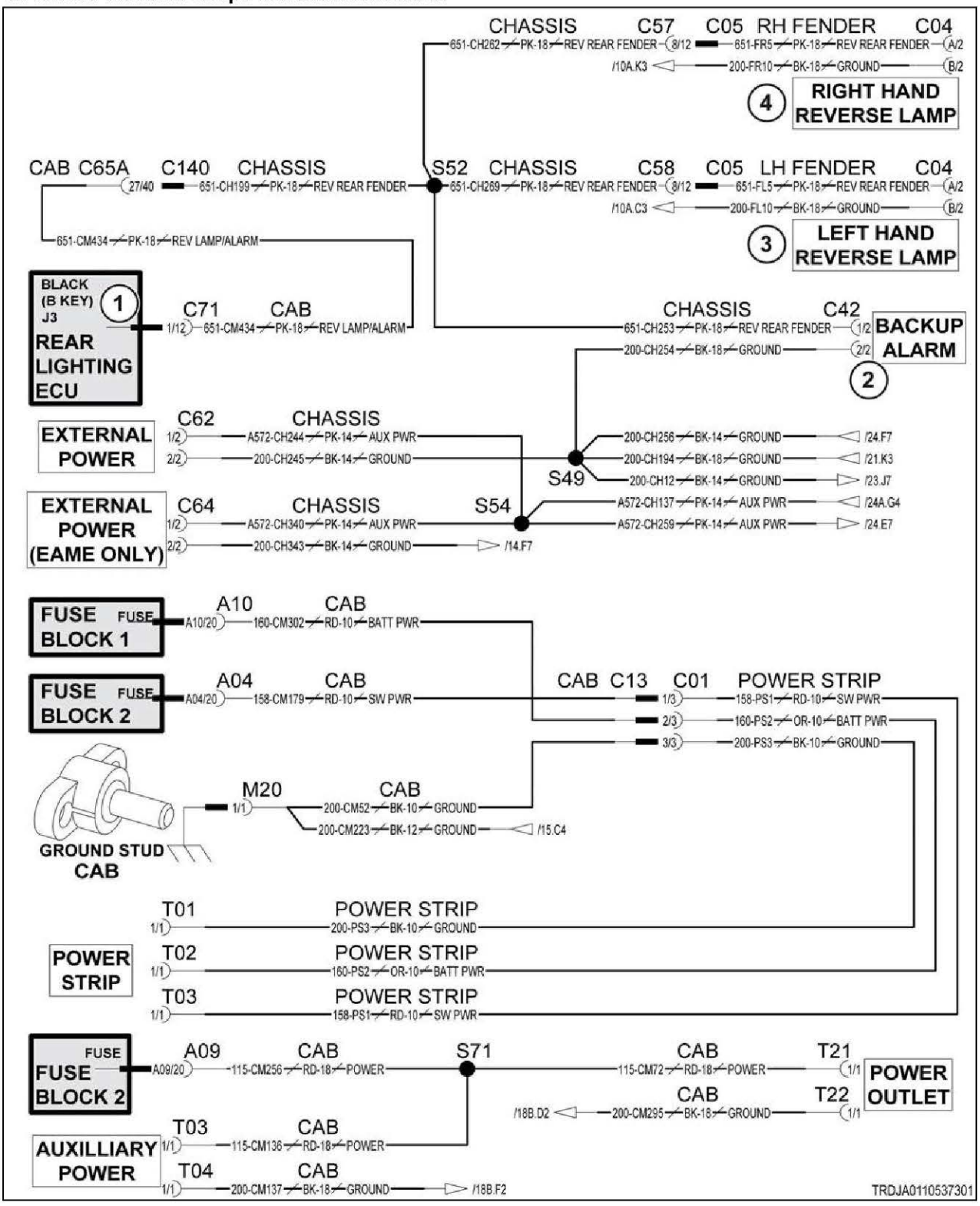

Fig. 729

Schematic legend		
Item	Schematic term	Description
1	REAR LIGHT ECU	Rear lighting module
2	BACKUP ALARM	Reverse alarm
3	LEFT HAND REVERSE LAMP	Left-hand reverse lamp
4	RIGHT HAND REVERSE LAMP	Right-hand reverse lamp
--	REV LAMP/ALARM	Reverse lamp/alarm
--	AUX PWR	Auxiliary power
--	SW PWR	Switch power
--	BATT PWR	Battery power

10.19.14 Code SA 210 SPN 2404 FMI 05

Rear lighting module has determined circuit current is below normal.

Diagnosis and solution

1. Check for an open circuit in the harness.

a) Turn the key start switch to the off position.
b) Turn the battery disconnect switch to the off position.
c) Remove the key from the battery disconnect switch.
d) Disconnect the harness connectors from the rear lighting module, left-hand and right-hand external turn, left-hand and right-hand park brake lamp, left-hand and right-hand turn lamp.
e) Put a jumper wire in the left-hand park brake lamp connector between contact A and contact B.
f) Check resistance from contact J3-3 to contact J3-4 on the rear lighting module.
g) Move the jumper wire to the right-hand park brake lamp contact B and right-hand turn light contact A.
h) Check resistance from contact J3-3 to contact J3-5 on the rear lighting module.

Result

Expected result - each resistance is less than 5 ohms.

Results:

- Yes - each resistance is less than 5 ohms.

  see step 2, page 10-1307
- No - one or more resistance is not less than 5 ohms.

  Repair or replace the harness.

  see step 2, page 10-1307

2. Check if the diagnostic code remains.

a) Check and clean the harness connector contacts.
b) Connect all the connectors.
c) Turn the battery disconnect switch to the on position.
d) Turn the key start switch to the on position.
e) Operate the machine at low idle.
f) Check if the diagnostic code remains.

Result

Expected result - the diagnostic code is not active.

Results:

- Yes - SPN 2404 FMI 05 is not active.

  Stop.
- No - SPN 2404 FMI 05 is active.

  Failure of the module is possible but not common. Exit the procedure and do the procedure again. If the diagnostic code remains active, replace the module.

  Stop.

10.19.14.1 Turn signal lamps electrical schematic

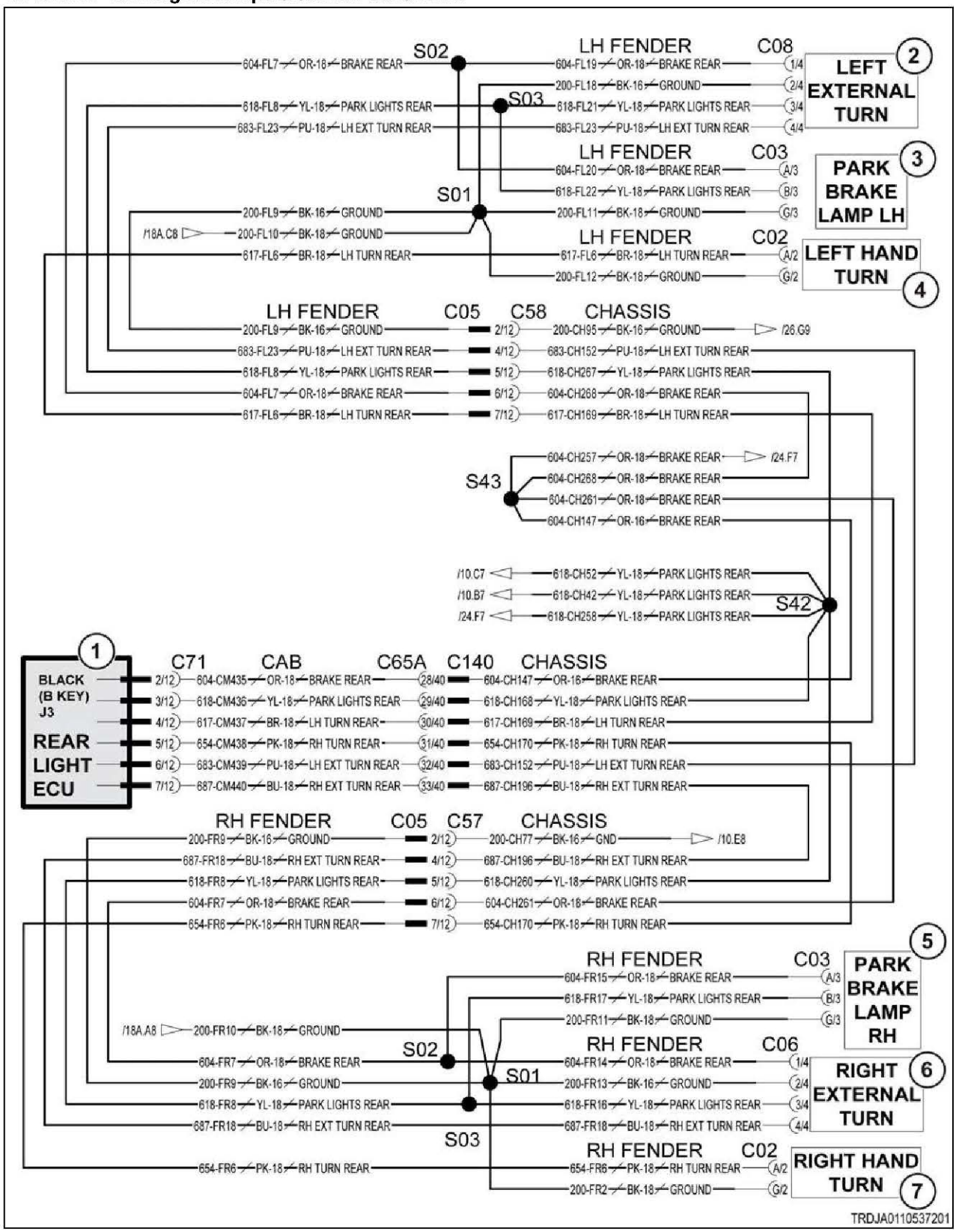

Fig. 730

Schematic legend		
Item	Schematic term	Description
1	REAR LIGHT ECU	Rear lighting module
2	LEFT EXTERNAL TURN	Left-hand external turn lamp
3	PARK BRAKE LAMP LH	Left-hand park brake lamp
4	LEFT HAND TURN	Left-hand turn
5	PARK BRAKE LAMP RH	Right-hand park brake lamp
6	RIGHT EXTERNAL TURN	Right-hand external turn lamp
7	RIGHT HAND TURN	Right-hand turn
--	PARK LIGHTS REAR	Rear parking lamps
--	LH EXT TURN REAR	Left-hand external turn rear
--	RH EXT TURN REAR	Right-hand external turn rear

10.19.15 Code SA 210 SPN 2404 FMI 06

Rear lighting module has determined circuit current is above normal.

Diagnosis and solution

1. Check for a short-circuit in the harness.

a) Turn the key start switch to the off position.
b) Turn the battery disconnect switch to the off position.
c) Remove the key from the battery disconnect switch.
d) Disconnect the harness connectors from the rear lighting module, left-hand and right-hand external turn, left-hand and right-hand park brake lamp, left-hand and right-hand turn lamp.
e) Check resistance from contact J3-3 to all the other contacts on the rear lighting module.

Result

Expected result - each resistance is more than 5000 ohms.

Results:

- Yes - each resistance is more than 5000 ohms.

  see step 2, page 10-1310
- No - one or more resistance is not more than 5000 ohms.

  Repair or replace the harness.

  see step 2, page 10-1310

2. Check if the diagnostic code remains.

a) Check and clean the harness connector contacts.
b) Connect all the connectors.
c) Turn the battery disconnect switch to the on position.
d) Turn the key start switch to the on position.
e) Operate the machine at low idle.
f) Check if the diagnostic code remains.

Result

Expected result - the diagnostic code is not active.

Results:

- Yes - SPN 2404 FMI 06 is not active.

  Stop.
- No - SPN 2404 FMI 06 is active.

  Failure of the module is possible but not common. Exit the procedure and do the procedure again. If the diagnostic code remains active, replace the module.

  Stop.

10.19.15.1 Turn signal lamps electrical schematic

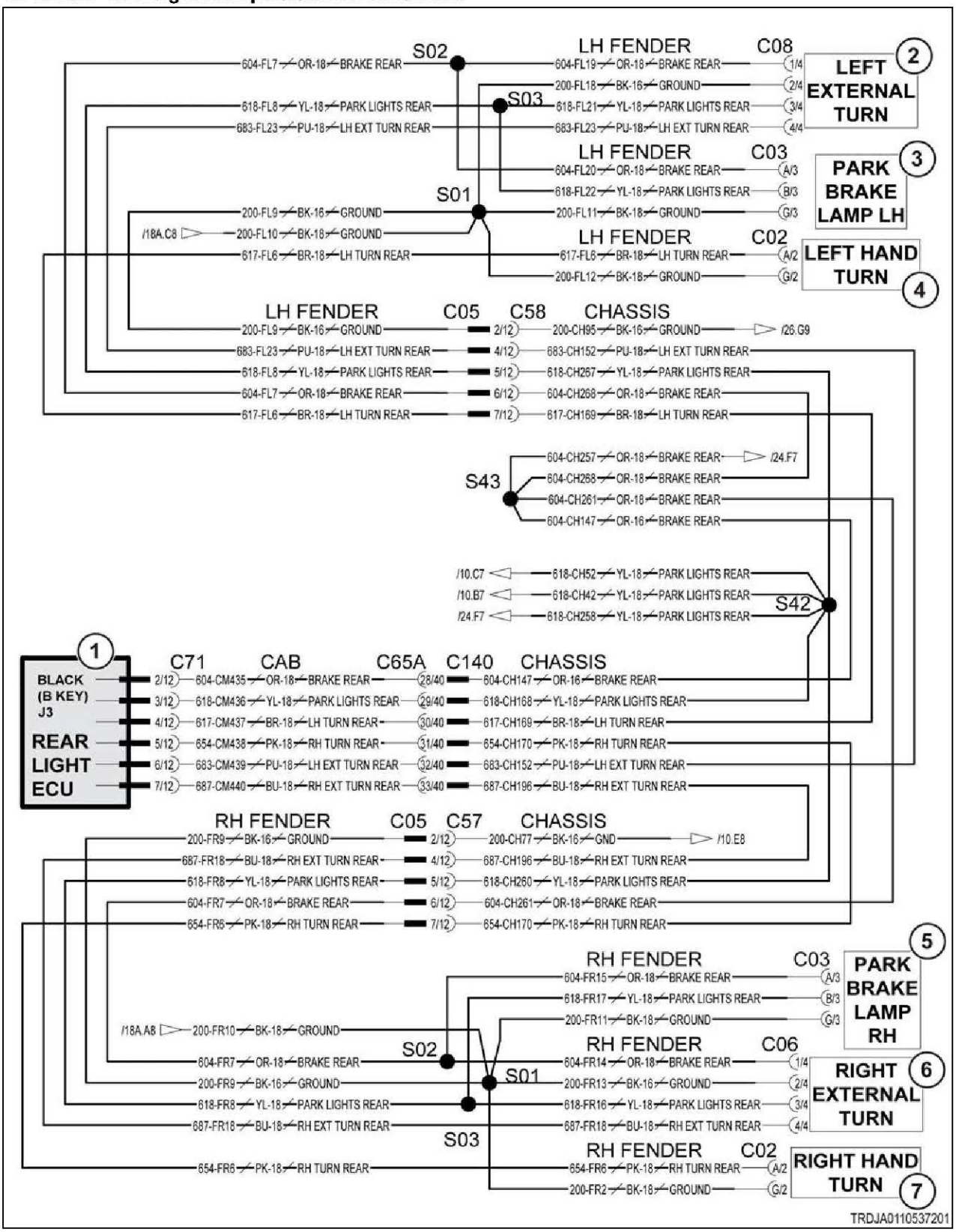

Fig. 731

Schematic legend		
Item	**Schematic term**	**Description**
1	REAR LIGHT ECU	Rear lighting module
2	LEFT EXTERNAL TURN	Left-hand external turn lamp
3	PARK BRAKE LAMP LH	Left-hand park brake lamp
4	LEFT HAND TURN	Left-hand turn
5	PARK BRAKE LAMP RH	Right-hand park brake lamp
6	RIGHT EXTERNAL TURN	Right-hand external turn lamp
7	RIGHT HAND TURN	Right-hand turn
--	PARK LIGHTS REAR	Rear parking lamps
--	LH EXT TURN REAR	Left-hand external turn rear
--	RH EXT TURN REAR	Right-hand external turn rear